CITY OF OPA-LOCKA

The City of Bright Opportunities

REGULAR COMMISSION MEETING
Agenda

Wednesday, October 25, 2023
7:00 PM

Commission Chamber
780 Fisherman Street, 3rd Floor
Opa-locka, FL 33054

City Commission
Mayor John H. Taylor, Jr.
Vice Mayor Natasha L. Ervin
Commissioner Sherelean Bass
Commissioner Joseph L. Kelley
Commissioner Veronica Williams

Appointed Officials
Interim City Manager Darvin Williams
City Attorney Burnadette Norris-Weeks
City Clerk Joanna Flores, CMC

SPEAKING BEFORE THE CITY COMMISSION

NOTE: All persons speaking shall come forward and give your full name and address, and the name and address of the organization you are representing.

There is a three (3) minute time limit for speaker/citizens forum and participation at all city commission meetings and public hearings. Your cooperation is appreciated in observing the three (3) minute time limit policy. If your matter requires more than three (3) minutes, please arrange a meeting or an appointment with the City Clerk prior to the commission meeting. City of Opa-locka Code of Ordinances Section 2-57

DECORUM POLICY

Any person making impertinent or slanderous remarks or who become boisterous while addressing the commission, shall be declared to be out of order by the presiding officer, and shall be barred from further audience before the Commission by the presiding officer, unless permission to continue or again address the commission be granted by the majority vote of the commission members. City of Opa-locka Code of Ordinances Section 2-58

NOTICE TO ALL LOBBYISTS

Any person appearing in a paid or remunerated representative capacity before the city staff, boards, committees and the City Commission is required to register with the City Clerk before engaging in lobbying activities. *City of Opa-locka Code of Ordinances Section 2-18*

FLORIDA STATUTES, CHAPTER 285.0105

"If a person decides to appeal any decision made by the Board, Agency or Commission with respect to the proceedings, and that, for such purpose, that person may need to ensure that a verbatim record of the proceedings is made, which record includes the testimony and evidence upon which the appeal is to be based."

PROCEDURES FOR PUBLIC PARTICIPATION

How to watch the meeting

Members of the public can watch public meetings and public hearings at https://www.youtube.com/user/CityofOpaLocka

City Commission Meetings are held in-person while allowing virtual participation. Members of the public wishing to address the Commission may do so in person or virtually.

To participate virtually, please register by 7:00 p.m. on the scheduled meeting date via the City of Opa-locka website at www.opalockafl.gov.

CITY OF OPA-LOCKA

"The City of Bright Opportunities"

AGENDA
REGULAR COMMISSION MEETING
October 25, 2023
7:00 PM

1. CALL TO ORDER:

2. ROLL CALL:

3. INVOCATION:

4. PLEDGE OF ALLEGIANCE:

5. AWARDS/PROCLAMATIONS/ACKNOWLEDGMENTS:

Proclamation presented by Mayor John H. Taylor Jr. in honor of Red Ribbon Week

Commendations presented by Vice Mayor Natasha L. Ervin
Opa-locka Police Officer Thomas Donahue
Opa-locka Hurricanes 10U, 12U and 14U and Lady Canes Cheerleaders 8U, 10U and 14U

Commendation presented by Interim City Manager Darvin Williams
Opa-locka Police Officer Rodney Jean-Baptiste

6. APPROVAL OF CONSENT AGENDA AND PULL LIST (deferrals and deletions)

7. APPROVAL OF AGENDA:

8. APPROVAL OF MINUTES:

Due to technical difficulties, commission meeting minutes will be submitted for approval at the next regular commission meeting.

9. DISTRICT ONE / DISTRICT TWO - COUNTY COMMISSIONER REPORT:

10. PUBLIC PRESENTATIONS:

State Senator Shevrin D. Jones
District 35
re: Legislative Update

King Leonard, Building Operations Manager
City of Opa-locka
re: City's Beautification Plan

Zonya Ray, Parks & Recreation Director
City of Opa-locka
re: Seniors on the Move trip to Savannah, GA

11. CITIZENS' FORUM:
(Opportunity for discussion of any concerns – please limit to 3 minutes)

12. ACTION ITEMS (items from consent agenda pull list):

13. ADMINISTRATION:

CONSENT AGENDA:

1. **A RESOLUTION OF THE CITY COMMISSION OF THE CITY OF OPA-LOCKA, FLORIDA, DIRECTING THE INTERIM CITY MANAGER TO ESTABLISH A DRUG-FREE COMMUNITY TASKFORCE WITHIN THE OPA-LOCKA POLICE DEPARTMENT, IN HONOR OF RED RIBBON WEEK; PROVIDING FOR INCORPORATION OF RECITALS; PROVIDING FOR AN EFFECTIVE DATE.** *Sponsored by Mayor Taylor*

2. **A RESOLUTION OF THE CITY COMMISSION OF THE CITY OF OPA-LOCKA, FLORIDA, REQUIRING THE CITY MANAGER OR INTERIM CITY MANAGER TO PAY ALL EXPENDITURES RELATED TO SPECIAL EVENTS THAT DO NOT EXCEED THE AMOUNT OF THE FISCAL YEAR BUDGET ALLOCATION FROM THE COMMISSIONER MAKING THE REQUEST; TO FURTHER REQUIRE THAT THE CITY MANAGER OR INTERIM CITY MANAGER VERIFIES THAT ALL EXPENTITURES ARE WITHIN THE BUDGETED AMOUNT ALLOCATED AND FOR AN ALLOWABLE PUBLIC PURPOSE; PROVIDING FOR INCORPORATIONOF RECITALS; PROVIDING FOR AN EFFECTIVE DATE.** *Sponsored by Mayor Taylor*

3. **A RESOLUTION OF THE CITY COMMISSION OF THE CITY OF OPA-LOCKA, FLORIDA, AUTHORIZING THE INTERIM CITY MANAGER TO EXECUTE A CONSENT AGREEMENT WITH THE MIAMI-DADE COUNTY DEPARTMENT OF REGULATORY AND ECONOMIC RESOURCES DIVISION OF ENVIRONMENTAL RESOURCES MANAGEMENT (DERM) TO RESOLVE CERTAIN ALLEGED BUILDING VIOLATIONS, AS SET FORTH IN ATTACHED EXHIBIT "A"; APPROVING AN IN-KIND MITIGATION PROPOSAL TO BE SUBMITTED TO DERM, ATTACHED HERETO AS COMPOSITE EXHIBIT "B", TO SATISFY A CIVIL PENALTY, OR IN THE ALTERNATIVE APPROVE THE PAYMENT OF A CIVIL PENALTY IF THE MITIGATION PROPOSAL IS NOT ACCEPTED BY DERM; PROVIDING FOR INCORPORATION OF RECITALS; PROVIDING FOR AN EFFECTIVE DATE.** *Sponsored by Interim City Manager*

4. **A RESOLUTION OF THE CITY COMMISSION OF THE CITY OF OPA-LOCKA, FLORIDA, AUTHORIZING THE INTERIM CITY MANAGER TO ISSUE A REQUEST FOR PROPOSALS (RFP) FOR A QUALIFIED CONTRACTOR FOR THE CONSTRUCTION OF DRINKING WATER LINE IMPROVEMENTS FOR THE NORTHERN DISTRICT PORTION OF THE CITY'S WATER SERVICE AREA; PROVIDING FOR INCORPORATION OF RECITALS; PROVIDING FOR AN EFFECTIVE DATE.** *Sponsored by Interim City Manager*

5. **A RESOLUTION OF THE CITY COMMISSION OF THE CITY OF OPA- LOCKA, FLORIDA, ACCEPTING THE PROPOSAL OF SP PLUS CORPORATION D/B/A SP+ CONSULTING SERVICES TO CONDUCT A FEASIBILITY STUDY TO INSTALL PARKING METERS WITHIN THE CITY, PURSUANT TO RFP NO. 23-0706200 AND FURTHER AUTHORIZING THE INTERIM CITY MANAGER TO ENTER INTO AN AGREEMENT WITH SP PLUS CORPORATION D/B/A SP+ CONSULTING SERVICES FOR SAID SERVICES, IN AN AMOUNT NOT TO EXCEED FORTY-ONE THOUSAND, THREE HUNDRED SEVENTY-FIVE DOLLARS ($41,375.00) AND IN THE FORM ATTACHED HERETO AS EXHIBIT "A" ; PROVIDING FOR ADOPTION OF REPRESENTATIONS; PROVIDING FOR AN EFFECTIVE DATE.** *Sponsored by Interim City Manager*

6. **A RESOLUTION OF THE CITY COMMISSION OF THE CITY OF OPA-LOCKA, FLORIDA, AUTHORIZING THE INTERIM CITY MANAGER TO ENTER INTO AND EXECUTE A VOLUNTARY COOPERATION AND OPERATIONAL ASSISTANCE MUTUAL AID AGREEMENT BETWEEN THE CITY OF OPA-LOCKA, FLORIDA AND THE MIAMI-DADE COUNTY SCHOOLS POLICE DEPARTMENT, ATTACHED HERETO AS EXHIBIT "A", FOR LAW ENFORCEMENT SERVICES AND RESOURCES; PROVIDING FOR INCORPORATION OF RECITALS; PROVIDING FOR AN EFFECTIVE DATE.** *Sponsored by Interim City Manager*

7. **A RESOLUTION OF THE CITY COMMISSION OF THE CITY OF OPA-LOCKA, FLORIDA, AMENDING AND RATIFYING ADVERTISEMENT DATES FOR THE PREVIOUSLY AUTHORIZED PROCUREMENT PROCESS RELATED TO RESOLUTION 23-150 FOR AN OUTSIDE ENTITY FIRM OR PROFESSIONAL TO SERVE AS THE HUMAN RESOURCES DIRECTOR FOR THE CITY OF OPA-LOCKA; PROVIDING FOR INCORPORATION OF RECITALS; PROVIDING FOR CONFLICT; PROVIDING FOR AN EFFECTIVE DATE.** *Sponsored by City Clerk*

14. NEW ITEMS:

15. PLANNING & ZONING:

A. PUBLIC HEARINGS:

B. APPEALS:

16. ORDINANCES/RESOLUTIONS/PUBLIC HEARINGS:

A. FIRST READING ORDINANCE(S)/PUBLIC HEARING(S):

1. **AN ORDINANCE OF THE CITY COMMISSION OF THE CITY OF OPA-LOCKA, FLORIDA, AMENDING THE ANNUAL ADOPTED GENERAL, PROPRIETARY AND SPECIAL REVENUE FUNDS BUDGETS FOR THE FISCAL YEAR COMMENCING OCTOBER 1, 2023 AND ENDING SEPTEMBER 30, 2024, ADJUSTING REVENUES AND EXPENDITURES AS REFLECTED IN EXHIBIT "A"; PROVIDING FOR THE EXPENDITURE OF FUNDS ESTABLISHED BY THE BUDGET; AUTHORIZING THE CITY MANAGER TO TAKE CERTAIN ACTIONS; PROVIDING FOR APPROPRIATION OF ALL BUDGETS AND EXPENDITURES; PROVIDING FOR FEES CONSISTENT WITH APPROPRIATIONS AND AMENDMENT; PROVIDING FOR INCORPORATION OF RECITALS; PROVIDING FOR CONFLICT AND REPEALER; PROVIDING FOR SEVERABILITY; PROVIDING FOR AN EFFECTIVE DATE.** *Sponsored by Interim City Manager*

2. **AN ORDINANCE OF THE CITY COMMISSION OF THE CITY OF OPA-LOCKA, FLORIDA, AMENDING THE ANNUAL ADOPTED GENERAL, PROPRIETARY AND SPECIAL REVENUE FUNDS BUDGETS FOR THE FISCAL YEAR COMMENCING OCTOBER 1, 2022 AND ENDING SEPTEMBER 30, 2023, ADJUSTING REVENUES AND EXPENDITURES AS REFLECTED IN EXHIBIT "A"; PROVIDING FOR THE EXPENDITURE OF FUNDS ESTABLISHED BY THE BUDGET; AUTHORIZING THE CITY MANAGER TO TAKE CERTAIN ACTIONS; PROVIDING FOR APPROPRIATION OF ALL BUDGETS AND EXPENDITURES; PROVIDING FOR FEES CONSISTENT WITH APPROPRIATIONS AND AMENDMENT; PROVIDING FOR INCORPORATION OF RECITALS; PROVIDING FOR CONFLICT AND REPEALER; PROVIDING FOR SEVERABILITY; PROVIDING FOR AN EFFECTIVE DATE.** *Sponsored by Interim City Manager*

B. SECOND READING ORDINANCE(S)/PUBLIC HEARING(S):

1. **AN ORDINANCE OF THE CITY COMMISSION OF THE CITY OF OPA-LOCKA, FLORIDA, AMENDING ARTICLE I, CHAPTER 7, SECTION 7-5 OF THE CITY OF OPA-LOCKA CODE OF ORDINANCES TO INCLUDE PROVISION FOR "CERTIFICATES OF RE-OCCUPANCY"; PROVIDING FOR REGULATIONS; PROVIDING FOR PENALTIES; PROVIDING FOR ADOPTION OF REPRESENTATIONS; REPEALING ALL ORDINANCES IN CONFLICT; PROVIDING FOR CODIFICATION; PROVIDING FOR AN EFFECTIVE DATE (first reading/public hearing held on September 27, 2023).** S*ponsored by Interim City Manager*

C. RESOLUTION(S):

17. CITY MANAGER'S REPORT:

1. Update on Revitalization of Historic City Hall
   by Adelina Gross, City of Opa-locka CIP Manager

2. Update on York Street encroachment issues
   by Adelina Gross, City of Opa-locka CIP Manager

18. OFFICIAL BOARD REPORTS:

19. MAYOR/COMMISSION REPORTS:

1. Mayor John H. Taylor Jr.
   Financial Oversight Update provided by Interim City Manager Darvin Williams

2. Commissioner Joseph L. Kelley
   ROAR Media
   Request for Audit Presentations
   Procurement Process

20. OFFICIAL BOARD APPOINTMENTS:

Civil Service Board
1 individual appointment (Commissioner Bass)
1 individual appointment (Commissioner Williams)

Housing Authority and Nuisance Abatement Board
1 individual appointment (Mayor Taylor)
1 individual appointment (Commissioner Williams)

Local Financial Oversight Board
1 at-large appointment

Teen & Young Adult Advisory Board
1 individual appointment (Commissioner Bass)
1 individual appointment (Commissioner Kelley)

21. ADJOURNMENT:

SCHEDULE OF FUTURE WORKSHOPS/OFFICIAL ACTIVITIES

1. **City of Opa-locka Comprehensive Plan / Commercial Zoning Workshop, Wednesday, October 25, 2023 at 6:00 PM in the City Commission Chambers, 780 Fisherman Street, 3rd Floor, Opa-locka, Florida.**

2. **City of Opa-locka Historic Home Preservation Workshop, Thursday, October 26, 2023 at 6:00 PM in the City Commission Chambers, 780 Fisherman Street, 3rd Floor, Opa-locka, Florida.**

3. **City of Opa-locka Affordable Housing Lunch & Learn, Saturday, October 28, 2023 from 11:00 AM - 1:00 PM, Sherbondy Village Auditorium, 215 Perviz Avenue, Opa-locka, Florida.**

4. **The City of Opa-locka Mayor & Commission present Opa-locka Annual Haunted House in the Park sponsored by the Opa-locka Parks & Recreation and the Opa-locka Booster Club, Tuesday, October 31, 2023 from 5:00 PM - 9:00 PM, Sherbondy Village Community Center, 215 Perviz Avenue, Opa-locka, Florida.**

5. **City of Opa-locka Mayor & Commission in partnership with Farm Share and Miami-Dade County invites the community to a Monthly Free Food Walk-Thru Distribution hosted by Commissioner Joseph L. Kelley, Wednesday, November 1, 2023 from 10:00 A.M. - 1:00 P.M., first come, first served, at Sherbondy Park Pavilion, 777 Sharazad Boulevard, Opa-locka, Florida.**

6. **City of Opa-locka Mayor & Commission and the Opa-locka Police Department invites all veterans and their families to a Veterans Day Picnic hosted by Commissioner Dr. Sherelean Bass, Saturday, November 11, 2023 from 11:00 A.M. - 2:00 P.M., Sherbondy Park Pavilion, 777 Sharazad Boulevard, Opa-locka, Florida. RSVP to Myia Hepburn at mhepburn@opalockafl.gov or 305-953-2868 Ext. 1104.**

7. **City of Opa-locka Mayor & Commission invite you to Commissioner Joseph L. Kelley's Meet Me Monday, November 13, 2023 at 6:00 PM at a location TBD.**

8. **City of Opa-locka Mayor & Commission, in partnership with Feeding South Florida, invites the community to a Monthly Free Food Walk-Thru Distribution hosted by Commissioner Joseph L. Kelley, Friday, November 17, 2023 from 10:00 A.M. - 1:00 P.M., first come, first served, at Segal Park, 2331 NW 143 Street, Opa-locka, Florida.**

9. **Free aerobics classes sponsored by Mayor John H. Taylor, Jr. every Monday & Wednesday from 6 p.m. - 7 p.m., Sherbondy Village, 215 Perviz Avenue, Opa-locka, FL.**

For further information, please contact the Office of the City Clerk by telephone at (305) 953-2800 or email jflores@opalockafl.gov.

Sponsored by: Mayor Taylor

RESOLUTION NO. 23-XXXX

A RESOLUTION OF THE CITY COMMISSION OF THE CITY OF OPA-LOCKA, FLORIDA DIRECTING THE INTERIM CITY MANAGER TO ESTABLISH A DRUG-FREE COMMUNITY TASKFORCE WITHIN THE OPA-LOCKA POLICE DEPARTMENT, IN HONOR OF RED RIBBON WEEK; PROVIDING FOR INCORPORATION OF RECITALS; PROVIDING FOR AN EFFECTIVE DATE.

WHEREAS, Red Ribbon Week takes place annually from October 23rd-31st and serves as a prevention awareness campaign against drugs, alcohol, tobacco, and violence; and

WHEREAS, the initiative was established after the death of Drug Enforcement Administration (DEA) Agent Enrique "Kiki" Camarena who was committed to aiding communities in combating illegal drugs; and

WHEREAS, during this campaign week, drug-free resources are disbursed to increase awareness and advocacy; and

WHEREAS, the Interim City Manager shall establish a Drug-Free Community Taskforce within the Opa-Locka Police Department to continuously promote the importance of drug-free lifestyles and active participation in drug prevention and reduction efforts within the community for a safer and healthier environment for current and future generations; and

WHEREAS, the City Commission has determined that directing the Interim City Manager to establish a Drug-Free Community Taskforce within the Opa-Locka Police Department is in the best interest of the City of Opa-Locka.

NOW THEREFORE, BE IT RESOLVED BY THE CITY COMMISSION OF THE CITY OF OPA LOCKA, FLORIDA:

SECTION 1. RECITALS ADOPTED.

The recitals to the preamble herein are incorporated by reference.

SECTION 2. AUTHORIZATION

The City Commission of the City of Opa-Locka hereby directs the Interim City Manager to establish a Drug-Free Community Taskforce within the Opa-Locka Police Department, in honor of Red Ribbon Week.

SECTION 3. SCRIVENER'S ERRORS.
Sections of this Resolution may be renumbered or re-lettered and corrections of typographical errors, which do not affect the intent of this Resolution may be authorized by the Interim City Manager, following review by the City Attorney, without need of public hearing, by filing a corrected copy of same with the City Clerk.

SECTION 4. EFFECTIVE DATE
This Resolution shall take effect upon the adoption and is subject to the approval of the Governor or Governor's Designee.

PASSED and **ADOPTED** this _____ day of _____, 2023.

_____
John Taylor, Mayor

ATTEST:

_____
Joanna Flores, City Clerk

APPROVED AS TO FORM AND
LEGAL SUFFICIENCY:

_____
Burnadette Norris-Weeks, P.A.
City Attorney

Moved by: _____

Seconded by: _____

VOTE:

Commissioner Bass	_____ (Yes)	_____ (No)
Commissioner Kelley	_____ (Yes)	_____ (No)
Commissioner Williams	_____ (Yes)	_____ (No)
Vice Mayor Ervin	_____ (Yes)	_____ (No)
Mayor Taylor	_____ (Yes)	_____ (No)

City of Opa-locka
Agenda Cover Memo

City Manager:	Darvin Williams			**CM Signature:**	DocuSigned by: Darvin Williams C46C07C1E8DE492...		
Commission Meeting Date:	*10/25/2023*		**Item Type:** *(Enter X in box)*	**Resolution**	**Ordinance**		**Other**
				X			
Fiscal Impact: *(Enter X in box)*	**Yes**	**No**	**Ordinance Reading:** *(Enter X in box)*		**1st Reading**		**2nd Reading**
			Public Hearing: *(Enter X in box)*		**Yes**	**No**	**Yes** / **No**
						X	**X**
Funding Source: *Account#* **:**	*(Enter Fund & Dept)* Ex: See Financial Impact Section		**Advertising Requirement:** *(Enter X in box)*		**Yes**		**No**
							X
Contract/P.O. Required: *(Enter X in box)*	**Yes**	**No**	**RFP/RFQ/Bid#:**				
		X					
Strategic Plan Related *(Enter X in box)*	**Yes**	**No**	**Strategic Plan Priority Area:**		**Strategic Plan Obj./Strategy:** *(list the specific objective/strategy this item will address)*		
	X		**Enhance Organizational** ☒				
			Bus. & Economic Dev ☐				
			Public Safety ☐				
			Quality of Education ☐				
			Qual. of Life & City Image ☐				
			Communication ☐				
Sponsor Name	Mayor Taylor		**Department:**		City Commission		

Short Title:

A resolution directing the Interim City Manager to establish a Drug-Free Community Taskforce within the Opa-locka Police Department, in honor of Red Ribbon Week.

Staff Summary:

Red Ribbon Week takes place annually from October 23rd-31st and serves as a prevention awareness campaign against drugs, alcohol, tobacco, and violence. The initiative was established after the death of Drug Enforcement Administration (DEA) Agent Enrique "Kiki" Camarena who was committed to aiding communities in combating illegal drugs. During this campaign week, drug-free resources are disbursed to increase awareness and advocacy. The Interim City Manager shall establish a Drug-Free Community Taskforce within the Opa-locka Police Department to further promote the importance of Red Ribbon Week to the Opa-locka residents.

DocuSign Envelope ID: 8EB1937F-6E94-4161-82F3-F5F577F15F05

Financial Impact:

Proposed Action:

Staff will execute the legislation directing the Interim City Manager to establish a Drug-Free Community Taskforce within the Opa-locka Police Department, in honor of Red Ribbon Week.

Attachment:

Sponsored by: Mayor Taylor

RESOLUTION NO. 23-XXXX

A RESOLUTION OF THE CITY COMMISSION OF THE CITY OF OPA-LOCKA, FLORIDA REQUIRING THE CITY MANAGER OR INTERIM CITY MANAGER TO PAY ALL EXPENDITURES RELATED TO SPECIAL EVENTS THAT DO NOT EXCEED THE AMOUNT OF THE FISCAL YEAR BUDGET ALLOCATION FROM THE COMMISSIONER MAKING THE REQUEST; TO FURTHER REQUIRE THAT THE CITY MANAGER OR INTERIM CITY MANAGER VERIFIES THAT ALL EXPENTITURES ARE WITHIN THE BUDGETED AMOUNT ALLOCATED AND FOR AN ALLOWABLE PUBLIC PURPOSE; PROVIDING FOR INCORPORATIONOF RECITALS; PROVIDING FOR AN EFFECTIVE DATE

WHEREAS, the City of Opa-Locka budgets for each City Commissioner to receive a set amount for the purpose of hosting special events each fiscal year; and

WHEREAS, special events enhance the quality of life for residents, visitors, and fosters good relations throughout the community; and

WHEREAS, historically, City Commissioners have each been allocated a fiscal year budgeted amount for special events without the need to present a separate resolution for each special event for approval at a commission meeting; and

WHEREAS, the City Commission desires to continue its history of approval with the additional requirements that the City Manager or Interim City Manager be required to: 1) verify that all expenditures are within the budgeted fiscal year amount for the Commissioner making the request; 2) verify that all expenditures are for an allowable public purpose; and

WHEREAS, the City Commission finds that so long as expenditure amounts are consistent with the allocated budget for a special event and the expenditures are for an allowable public purpose, there is no need for Commissioner's expenditures for Special Events to individually come before the City Commission for approval; and

WHEREAS, should a City Commissioner be advised that the budgeted amount for a special event exceeds the allocated budgeted amount during any fiscal year, a Resolution should be presented to the City Commission for consideration and a vote; and

WHEREAS, the City Commission has determined that it is in the best interest of the City to require that the City Manager or Interim City Manager pay all expenditures

related to special events that do not exceed the amount of the fiscal year budget allocation from the City Commissioner making the request and to further require that the City Manager or Interim City Manager verify that all expenditures are within the budgeted amount allocated and for an allowable public purpose.

NOW THEREFORE, BE IT RESOLVED BY THE CITY COMMISSION OF THE CITY OF OPA LOCKA, FLORIDA:

SECTION 1. RECITALS ADOPTED.
The recitals to the preamble herein are incorporated by reference.

SECTION 2. AUTHORIZATION FOR PAYMENT AND REQUIREMENT FOR REVIEW OF BUDGETED EXPENDITURES
The City Commission of the City of Opa-Locka hereby authorizes and approves that the City Manager or Interim City Manager pay all expenditures related to special events that do not exceed the amount of the fiscal year budget allocation for a City Commissioner making the request; and to further require that the City Manager or Interim City Manager verifies that all expenditures are within the budgeted amount allocated and for an allowable public purpose. If a City Commissioner is advised that the budgeted amount for a special event exceeds the allocated budgeted amount during any fiscal year, a Resolution should be presented to the City Commission for consideration and a vote.

SECTION 3. SCRIVENER'S ERRORS.
Sections of this Resolution may be renumbered or re-lettered and corrections of typographical errors, which do not affect the intent of this Resolution as may be authorized by the Interim City Manager, following review by the City Attorney, without need of public hearing, by filing a corrected copy of same with the City Clerk.

SECTION 4. EFFECTIVE DATE
This Resolution shall take effect upon the adoption and is subject to the approval of the Governor or Governor's Designee.

PASSED and **ADOPTED** this _____ day of _____, 2023.

_____
John Taylor, Mayor

ATTEST:

_____
Joanna Flores, City Clerk

APPROVED AS TO FORM AND
LEGAL SUFFICIENCY:

_____
Burnadette Norris-Weeks, P.A.
City Attorney

Moved by: _____

Seconded by: _____

VOTE:

Commissioner Bass	_____ (Yes)	_____ (No)
Commissioner Kelley	_____ (Yes)	_____ (No)
Commissioner Williams	_____ (Yes)	_____ (No)
Vice Mayor Ervin	_____ (Yes)	_____ (No)
Mayor Taylor	_____ (Yes)	_____ (No)

City of Opa-locka
Agenda Cover Memo

City Manager:	Darvin Williams			**CM Signature:**	DocuSigned by: Darvin Williams C46C07C1E8DE492...			
Commission Meeting Date:	*10.25.2023*		**Item Type:** *(Enter X in box)*	**Resolution**	**Ordinance**		**Other**	
					X			
Fiscal Impact: *(Enter X in box)*	**Yes**	**No**	**Ordinance Reading:** *(Enter X in box)*		**1st Reading**		**2nd Reading**	
			Public Hearing: *(Enter X in box)*		**Yes**	**No**	**Yes**	**No**
					X		**X**	
Funding Source: *Account#* **:**	*(Enter Fund & Dept)* Ex: See Financial Impact Section		**Advertising Requirement:** *(Enter X in box)*		**Yes**		**No**	
							X	
Contract/P.O. Required: *(Enter X in box)*	**Yes**	**No**	**RFP/RFQ/Bid#:**					
		X						
Strategic Plan Related *(Enter X in box)*	**Yes**	**No**	**Strategic Plan Priority Area:**		**Strategic Plan Obj./Strategy:** *(list the specific objective/strategy this item will address)*			
	X		**Enhance Organizational** ☒ **Bus. & Economic Dev** ☐ **Public Safety** ☐ **Quality of Education** ☐ **Qual. of Life & City Image** ☐ **Communication** ☐					
Sponsor Name	Mayor Taylor		**Department:**		City Commission			

Short Title:

An ordinance authorizing the Mayor & Commission to take all steps necessary to plan special events for the welfare of the residents of Opa-locka, including the expenditure of funds, not to exceed the amount in each Commission Member's Special Events Budget, without the need for approval of each individual event, unless the expenditures for the event exceed the amount approved through the budgetary process.

Staff Summary:

The City Commission believes that community events are ideal to promote positive change, fosters inspiration, community building and help to increase the quality of life for residents and visitors. The Mayor and Commission each have an allocated budget for projected special events. Annually, Elected officials shall be granted authorization to take the necessary steps to plan special events and expend funds not to exceed the budgeted amount of their discretionary special events. In the occurrence expenditures are excessive, the City Commission must seek approval for the individual event through the budgetary process. In the case of an

DocuSign Envelope ID: 8EB1937F-6E94-4161-82F3-F5F577F15F05

emergency, the City Manager shall remain authorized to approve usage of funds while awaiting budget amendment.

Financial Impact: No impact

Proposed Action:

Staff will execute the legislation authorizing the City Commission to take all steps necessary to plan special events for the welfare of the Opa-locka residents.

Attachment:

Sponsored by: Interim City Manager

RESOLUTION NO. XX-XXXX

A RESOLUTION OF THE CITY COMMISSION OF THE CITY OF OPA-LOCKA, FLORIDA, AUTHORIZING THE INTERIM CITY MANAGER TO EXECUTE A CONSENT AGREEMENT WITH THE MIAMI-DADE COUNTY DEPARTMENT OF REGULATORY AND ECONOMIC RESOURCES DIVISION OF ENVIRONMENTAL RESOURCES MANAGEMENT (DERM) TO RESOLVE CERTAIN ALLEGED BUILDING VIOLATIONS, AS SET FORTH IN ATTACHED EXHIBIT "A"; APPROVING AN IN-KIND MITIGATION PROPOSAL TO BE SUBMITTED TO DERM, ATTACHED HERETO AS COMPOSITE EXHIBIT "B", TO SATISFY A CIVIL PENALTY, OR IN THE ALTERNATIVE APPROVE THE PAYMENT OF A CIVIL PENALTY IF THE MITIGATION PROPOSAL IS NOT ACCEPTED BY DERM; PROVIDING FOR INCORPORATION OF RECITALS; PROVIDING FOR AN EFFECTIVE DATE

WHEREAS, the Miami-Dade County Department of Regulatory and Economic Resources Division of Environmental Resources Management **(**DERM), alleges that the City of Opa-Locka ("City") has failed to comply with certain Building and Licensing regulations; and

WHEREAS, as a part of a review conducted by DERM, it was determined that the City's Building and Licenses Department issued Business Tax Receipts (Occupational Licenses) without first determining whether the properties on which the businesses were located were in full compliance with DERM requirements regarding connection to the City's wastewater collection and transmission (sewer) system; and

WHEREAS, as a part of a review conducted by DERM, it was determined by DERM that the City's Building and Licenses Department issued Business Tax Receipts (Occupational Licenses) inconsistent with a prior consent decree; and

WHEREAS, to resolve the outstanding alleged violations, City is recommending that in lieu of a civil penalty of Forty Thousand Dollars ($40,000), the City would propose in-kind project(s) equaling or exceeding 150% of the penalty assessed to result in sewer improvements that directly benefit the City's citizens and support the protection of public health; and

WHEREAS, specifically**,** as a mitigation proposal to DERM, the City intends to install 9 SmartCover Systems monitoring devices in the pump station 7 collection system in the City's Glorieta Gardens area. Said purchase has already been approved by the city commission, installed, set-up and the City has repaired 09 SmartCover Systems units at a total cost of $49,000.00. The City is also providing a $19,431.98

quote (See Attached as Composite Exhibit "B") for the maintenance of the 13 SmartCover Systems units to be deployed throughout the city for the period 11/1/2023 to 10/31/2024; and

WHEREAS, as further mitigation, the City intends to review its collection system to determine the deployment of additional SmartCover Systems units. The City is also proposing a map in GIS format noting the locations of the proposed, additional SmartCover Systems units; and

WHEREAS, the City Commission desires to authorize the submittal of an "In Kind Project Proposal" for consideration by DERM which meets the conditions improvement or rehabilitation of the Consent Agreement (plan Attached as Composite Exhibit "B"). In the event that DERM does not approve the in-kind services proposal, Exhibit "B, the City Commission desires to authorize payment of a prorated Forty-Thousand Dollar ($40,000.00) penalty; and

WHEREAS, the City Commission of the City of Opa-Locka hereby authorizes the City Manager to execute the consent agreement with DERM, attached hereto as Exhibit "A" and submit the In-Kind Mitigation Proposal, Attached hereto as Exhibit "B."

NOW THEREFORE, BE IT RESOLVED BY THE CITY COMMISSION OF THE CITY OF OPA LOCKA, FLORIDA:

SECTION 1. RECITALS ADOPTED.

The recitals to the preamble herein are incorporated by reference.

SECTION 2. AUTHORIZATION

The City Commission of the City of Opa-Locka hereby authorizes the City Manager to execute a Consent Agreement, substantially in the form attached as Exhibit "A", with the Miami-Dade County Department of Regulatory and Economic Resources, Division of Environmental Resources Management (DERM), in order to resolve alleged violations of the Miami-Dade County Code of Ordinances. The City Commission further approves an in-kind mitigation proposal to be submitted to DERM, attached hereto as composite Exhibit "B", to satisfy a civil penalty or in the alternative approval a civil penalty in the amount of Forty-Thousand Dollar ($40,000.00) if the mitigation proposal is not accepted by DERM.

SECTION 3. SCRIVENER'S ERRORS.
Sections of this Resolution may be renumbered or re-lettered and corrections of typographical errors which do not affect the intent may be authorized by the City Manager, following review by the City Attorney and without need of public hearing, by filing a corrected copy of same with the City.

Section 4. EFFECTIVE DATE.
This Resolution shall take effect immediately upon adoption and is subject to the approval of the Governor or his designee.

PASSED and **ADOPTED** this _____ day of _____, 2023.

_____
John Taylor, Mayor

ATTEST:

_____
Joanna Flores, City Clerk

APPROVED AS TO FORM
AND LEGAL SUFFICIENCY:

_____
Burnadette Norris-Weeks, P.A.
City Attorney

Moved by: _____

Seconded by: _____

VOTE:

Commissioner Bass _____
Commissioner Kelley _____
Commissioner Williams _____
Vice Mayor Ervin _____
Mayor Taylor _____

DocuSign Envelope ID: FEB94158-A83D-4DBE-BAD6-37BC9948D34D

City of Opa-locka
Agenda Cover Memo

Department Director:	Airia Austin			**Department Director Signature:**			
City Manager:	Darvin Williams			**CM Signature:**	DocuSigned by: Darvin Williams C48C07C1E8DE492...		
Commission Meeting Date:	*10/25/2023*		**Item Type:** *(Enter X in box)*	**Resolution**	**Ordinance**		**Other**
				X			
Fiscal Impact: *(Enter X in box)*	**Yes**	**No**	**Ordinance Reading:** *(Enter X in box)*		**1st Reading**		**2nd Reading**
		X	**Public Hearing:** *(Enter X in box)*		**Yes**	**No**	**Yes** / **No**
						X	X
Funding Source: *Account#* **:**	*(Enter Fund & Dept.)* Ex: See Financial Impact Section		**Advertising Requirement:** *(Enter X in box)*		**Yes**		**No**
							X
Contract/P.O. Required: *(Enter X in box)*	**Yes**	**No**	**RFP/RFQ/Bid#:**				
		X					
Strategic Plan Related *(Enter X in box)*	**Yes**	**No**	**Strategic Plan Priority Area:**		**Strategic Plan Obj./Strategy:** *(list the specific objective/strategy this item will address)*		
	X		**Enhance Organizational** ☐ **Bus. & Economic Dev** ■ **Public Safety** ☐ **Quality of Education** ☐ **Qual. of Life & City Image** ■ **Communication** ☐				
Sponsor Name	City Manager		**Department:**		City Manager		

Short Title:

Execution of DERM Consent Agreement

Staff Summary:

History – In an extensive review conducted by the Miami-Dade Department of Regulatory and Economic Resources Division of Environmental Resources Management, DERM, it was determined that the City's Building and Licenses Department was issuing Business Tax Receipts (Occupational Licenses) without first determining whether the property on which the business was located was in full compliance with DERM requirements in regard to connection to the City's wastewater collection and transmission (sewer) system.

Current Activity – After extensive discussion, it was agreed that all applicants for Business Tax Receipts would be first be referred to DERM for its approval before a Business Tax Receipt could be issued. To document the resolution of this issue, a consent agreement between the City and

DERM needs to be executed. Included within this consent agreement are penalties of $40,000 and $1,051.47, for a total of $41,051.47.

Financial Impact –Account# 30-514380 – Legal Settlements, will be established in the Building and Licenses Department and will be funded as part of Budget Amendment #5

Proposed Action:

Staff recommends the City Commission authorize the Interim City Manager to sign the consent agreement with DERM to resolve the issue of Business Tax Receipts being issued without ensuring compliance with DERM requirements and to pay the penalties associated with this consent agreement.

Attachment:

1. Agenda
2. DERM Consent Agreement.
3. Resolution 21-9837

MIAMI-DADE COUNTY DEPARTMENT OF REGULATORY AND ECONOMIC RESOURCES, DIVISION OF ENVIRONMENTAL RESOURCES MANAGEMENT Complainant, vs. City of Opa-locka Respondent.	**CONSENT AGREEMENT**

This Consent Agreement (hereafter "Agreement") is entered into by and between Miami-Dade County Department of Regulatory and Economic Resources, Division of Environmental Resources Management (hereinafter referred to as "DERM") and the City of Opa-locka (hereafter referred to as "Respondent" or "City") pursuant to Section 24-7(15)(c) of Chapter 24 of the Code of Miami-Dade County, Florida (the Code). This Agreement shall supersede the consent agreements between the City and DERM executed on December 15, 2018, February 19, 2019, and March 3, 2021 and shall serve to redress violations of Chapter 24, Miami-Dade County Code and the Consent Decree, dated June 6, 2013, Case Number I: 12-cv-24400 FAM, *United States* vs. *Miami-Dade County*, (hereinafter "the Federal Consent Decree").

DERM finds and Respondent acknowledges the following:

FINDINGS OF FACTS

1. Miami-Dade County, Florida, is a political subdivision of the State of Florida. DERM is a division within the County's Department of Regulatory and Economic Resources and is empowered to provide for pollution control and protection of the environment within Miami-Dade County pursuant to Article VIII, Section 6 of the Florida Constitution, the Miami-Dade County Home Rule Charter and Section 403.182 of the Florida Statutes. DERM has jurisdiction over matters addressed in this Consent Agreement.

2. The Federal Consent Decree between the United States of America, the State of Florida, and Miami-Dade County, requires in part that the County generally, and DERM specifically, establish and/or amend as appropriate, Sections 24-42.3 and 24-42.2 of the Code to require amongst other things, DERM's review and issuance of written certification of sanitary sewer system collection, transmission and treatment capacity prior to the approval of all Development Orders, including but not limited to building permits, certificates of occupancy, certificates of completion, certificates of use or municipal occupational licenses and to require municipal utilities to comply with the same standards as the Miami-Dade County Water and Sewer Department.

3. The Respondent is the current owner and operator of a utility wastewater collection and transmission system ("WCTS") consisting of pumping stations, force mains and gravity sewer mains and permitted under Miami-Dade County Domestic Wastewater Operating Permit DWO-47.

4. The Respondent's utility wastewater collection and transmission system is in violation of the provisions of Section 24-42.2 of the Code, which provides for evaluation of wastewater collection and transmission systems to identify and reduce infiltration and inflow into the systems within Miami-Dade County. The Respondent previously entered into consent agreements with DERM on October 26, 2009 and on December 18, 2015, attached hereto as Exhibit A and incorporated herein, to redress violations of Section 24-42.2 as referenced above as well as Sections 24-18 and 24-34, relating to non-compliance with permit and utility service fee requirements, and violations of the Federal Consent Decree. The Respondent has failed to implement a Sewer System Evaluation Survey ("SSES") for the complete system that fully complies with the requirements of the Code.

5. Subsequent to the execution of the 2009 and 2015 consent agreements, the Respondent entered into a consent agreement with DERM on February 19, 2019, attached hereto as Exhibit B and incorporated herein, which superseded the prior consent agreements (see Exhibit A) to redress continuing violations of Sections 24-18, 24-34, and 24-42.2 of the Code and violations of the Federal Consent Decree.

6. The February 19, 2019 consent agreement required the Respondent to submit a summary report documenting all **approved** Building Permit Applications, Certificates of Use, Occupational Licenses, and/or Local Business Tax Receipts. A complete list of Occupational Licenses ("OLs") (AKA Local Business Tax Receipts) issued by the Respondent in 2019 was subsequently submitted to DERM for review which revealed that multiple local businesses had been issued municipal operating authorizations in the form of OLs, without first obtaining DERM's written approval as required by the Code. The review further revealed that approximately sixty-two (62) OLs had been issued by the Respondent even though said license application was disapproved by DERM. This resulted in businesses operating within the City of Opa-locka, Florida without required DERM annual operating permits in violation of Section 24-18 of the Code, operating without approved Fats, Oils and Grease control devices in violation of Section 24-42.6 of the Code, which provided the potential for facilities to be operating while served by public sanitary sewer systems in moratorium in violation of Section 24-42.3 of the Code. At a minimum, sixty-eight (68) OLs not routed to DERM for review appear to require DERM operating permits in addition to DERM approval. On November 4, 2020, DERM issued an enforcement Notice, attached hereto as Exhibit E and incorporated herein to the Respondent which required Respondent to cease and desist from issuing municipal operating authorizations without DERM's review and prior written approval. On March 8, 2023, DERM requested that the Respondent submit the OL list in a spreadsheet in MS Excel format from 2022 (and prior to 2022) for the OL renewals and to provide a list of facilities that are currently operating without DERM approval; said items remain pending.

7. On March 3, 2021, the Respondent entered into a consent agreement with DERM, attached hereto as Exhibit C and incorporated herein, to redress violations of the Code referenced in paragraph 6 herein.

8. On January 4, 2023, a Notice of Violation of Consent Agreement, attached hereto as Exhibit D and incorporated herein, was issued to the Respondent for non-compliance with paragraphs 9, 13, 14, 15, 18 and 19 of the March 3, 2021 consent agreement, specifically, for failure to: 1) post a link to the DERM Plan Review informational page on the City's website; 2) submit a Corrective Action Plan ("CAP") and obtain DERM approval of said CAP; 3) obtain approval for all submittals required pursuant to the Agreement; 4) submit a summary report and quarterly reports thereafter; 5) submit an "In-Kind Project

Proposal" to mitigate continuing noncompliance with the Code; and 6) submit the administrative and follow-up costs mandated by the Agreement.

9. On February 7, 2023, the Respondent submitted a Corrective Action Plan ("CAP"), which was subsequently revised by the Respondent and resubmitted to DERM on February 17, 2023 to address the modification of the Respondent's existing intake systems or processes, for all applications listed in paragraph six (6) herein, and submitted a summary report documenting all new **approved** Building Permit Applications, Certificates of Use, Occupational Licenses, and/or Local Business Tax Receipts issued in 2020 and 2021. Said CAP was reviewed and deemed acceptable by DERM on March 22, 2023.

10. On February 10, 2023, the Respondent submitted the administrative and follow-up costs mandated by paragraph 19 of the March 3, 2021 consent agreement.

11. On March 24, 2023, the Respondent submitted an "In-Kind Project Proposal" to offset the agreed upon civil penalties stipulated in paragraph 18 the March 3, 2021 consent agreement, which was deemed acceptable by DERM on March 28, 2023.

12. As of October 3, 2023, a review of DERM records revealed that the Respondent owes DERM $130,995.21 in Utility Fees. A copy of the Billing Agreement is attached hereto as Exhibit E.

13. Respondent hereby consents to this Agreement without either admitting or denying the allegations made by DERM in the finding of facts listed above.

14. In an effort to resolve the violations described herein so as to ensure continued protection of the health and safety of the public and the environment of Miami-Dade County and to facilitate compliance with the Code and to avoid time-consuming and costly litigation, the parties hereby agree to the following, and is hereby ordered pursuant to Section 24-7(15) of the Code:

COMPLIANCE AND REPORTING REQUIREMENTS

15. The Respondent shall continue making monthly payments to the Miami-Dade Water & Sewer Department towards the past due Utility Service Fees for FY 2013-2014 until the remaining balance of $130,995.21 is paid in full.

16. Within fifteen (15) days of the effective date of this Agreement, the Respondent shall make DERM Plan Review guidance documents available to the residents and business owners within the City, including but not limited to, posting a link to the DERM Plan Review informational page on the Respondent's website that is easily accessible and user friendly to the public. The guidance documents shall include among other items, DERM contact information and a detailed explanation of the submittal and approval process. Proof shall be provided to DERM's Environmental Code Enforcement Coordinator, Tricia Kong at Tricia.Kong@miamidade.gov.

17. The modified or new intake systems as proposed in the DERM-approved CAP dated February 17, 2023 shall be available for pre-deployment testing no later than March 22, 2024 and shall be fully deployed

and functional **within twenty-four (24) months** from the effective date of this Agreement. The Respondent shall implement measures which will ensure that:

(a) Respondent's staff, its delegates and/or authorized agents, will correctly and consistently identify all submittals and applications which require DERM review and approval prior to Respondent's temporary and final approvals;

(b) Respondent's staff, its delegates and/or authorized agents, will not issue or grant any approvals of submittals and applications subject to the code sections of Chapter 24 as referenced in this Agreement without the Respondent's confirmation of DERM's prior written approval of the application;

(c) Each and every approval, temporary and final, issued or granted by Respondent's staff, its delegates and/or authorized agents, is memorialized in a form that captures the date and time of Respondent's approval, the name of Respondent's staff approving the application, the type of application being approved, the form of DERM's approval, and an image or copy of DERM's approval;

(d) All required information stored and available for DERM review for a period of no less than five (5) years;

(e) DERM has remote access to audit, review and download data compiled from the processes implemented herein.

18. Within sixty (60) days of the effective date of this Agreement, the Respondent shall submit to DERM proof that the approximately one hundred and nine (109) facilities as shown in Exhibits F & G, which have not submitted an application or whose Certificate of Use application has expired, have either closed, are currently under enforcement with the City, or have submitted the required documentation to obtain DERM approval. All reports shall be submitted to Tricia Kong at Tricia.Kong@miamidade.gov.

19. Within thirty (30) days of the effective date of this Agreement, the Respondent shall submit to DERM the quarterly summary reports for 2023 documenting all new **approved** and renewed Building Permit Applications, Certificates of Use, Occupational Licenses, and/or Local Business Tax Receipts. Thereafter, the Respondent shall continue to submit quarterly summary reports until the end of 2028. The frequency of submittals may be modified based on DERM review of the summary report(s). All documentation shall be submitted to Tricia Kong at Tricia.Kong@miamidade.gov.

20. Within sixty (60) days of the effective date of this Agreement, the Respondent shall submit to DERM a Budget Report with a Cost Estimate in MS Excel format, according to the attached Cost Estimate spreadsheet shown in Exhibit H, for the construction costs according to the scope of the rehabilitation work required for each Pump Station (PS) Basin in Appendices 2 (PS Basin #5) and 3 (PS Basin #7). All budget reports shall be submitted to PSO@miamidade.gov and to Tricia Kong at Tricia.Kong@miamidade.gov for review and approval. Any of the Respondent's pump station basins which have infiltration and inflow that is not less than five thousand (5,000) gallons per inch pipe diameter, per day, per mile of pipe and laterals, or have not completed the pending rehabilitation work

(Sanitary Sewer Basin Corrective Action Plan) eliminating the infiltration/inflow sources discovered shall remain under moratorium and no new additional sewage flows will be approved by DERM and no new Building permits or changes of use applications that increase sewage flows, calculated in accordance with the Code, shall be approved by the Respondent's Building Official, or any other person, until such time as the pump station basins are brought into compliance with the requirements of Section 24-42.2 of the Code as shall be determined and confirmed by DERM in writing. If the repairs have been completed for appendices 2 & 3, the Respondent shall provide a table outlining the work by date and the respective costs along with copies of the paid invoices to PSO@miamidade.gov and to Tricia Kong at Tricia.Kong@miamidade.gov.

21. On a quarterly basis, the Respondent's staff, its delegates and/or authorized agents shall submit a detailed Quarterly Basin Compliance Status Report, of all sanitary sewer system improvements and the repairs implemented and completed for each basin, (Corrective Action Plans/Sewer System Rehabilitation Work), and demonstrate compliance with less than 5,000 GPDIM infiltration/inflow code requirement as follows:

    a). For PS Basin no. 5, the Respondent shall complete the requirements listed in "Appendix 2" within the timeframes shown therein.

    b). For PS Basin no. 7, the Respondent shall complete the requirements listed in "Appendix 3" within the timeframes shown therein.

    The first Quarterly Basin Compliance Status Report shall be submitted to DERM at PSO@miamidade.gov no later than within sixty (60) days of the effective date of this Agreement and shall continue until such time of final completion of each appendix.

22. Within ninety (90) days of the effective date of this Agreement, the Respondent shall upload a complete certification package via the file transfer protocol (Exhibit I) for the certification of 2014-SEW-EXT-0127 and 2017-SEW-EXT-00191 in accordance with the provisions contained in Section 24-42.3 of the Code.

23. Reports submitted by Respondent pursuant to paragraphs 20, 21, and 22 of this Agreement shall be reviewed for completeness and accuracy and signed by an authorized City of Opa-locka senior management official with the following attestation:

    "*I certify under penalty of law that this document and all attachments were prepared under my direction or supervision in accordance with a system designed to assure that qualified personnel properly gather and evaluate the information submitted. Based on my inquiry of the person or persons who manage the system, or those persons directly responsible for gathering such information, the information submitted is, to the best of my knowledge and belief, true, accurate and complete. I am aware that there are significant penalties for submitting false information, including the possibility of fine and imprisonment for knowing violations*."

    All technical reports as determined by RER-DERM submitted by the Respondent's staff, its delegates and/or authorized agents shall be sealed, signed, and dated by an engineer licensed in the State of Florida.

To assist the City in meeting timely compliance with the requirements contained herein, DERM is provided the City with an outline of the requirements and applicable compliance deadlines in the spreadsheet titled "*Consent Agreement Compliance Requirements and Deadlines*", attached hereto as Exhibit J, and incorporated herein.

24. The submittals required pursuant to this Agreement are subject to review and approval, approval with conditions, or disapproval by DERM. Implementation of the approved submittals shall be completed within the timeframes provided in the DERM approval. Nothing herein shall prevent Respondent from requesting, and from DERM approving, extensions of time for good cause. If DERM disapproves any submittals, an itemized explanation will be included in the disapproval letter. The Respondent shall fully address all items detailed in the disapproval letter within the timeframes provided in said letter.

SETTLEMENT COSTS

25. The Respondent hereby certifies that Respondent has the financial ability to initiate compliance and shall endeavor to comply with the terms or conditions set forth herein and to comply with any payment requirements specified in this Agreement.

26. Upon execution of this Agreement, the Respondent shall submit a certified check made payable to "*Miami-Dade County"* (indicate file no. DWO-47 on check) in the amount of one-thousand-and-fifty-one-dollars-and-forty-seven-cents ($1,051.47) to cover administrative costs incurred by the Department in the follow-up of the noncompliance with prior Consent Agreements. Payment shall be sent to DERM, Attn: Cashier's Office, c/o Tricia Kong (DWO-47), 701 NW 1st Court, Cashier's Office, 3rd Floor, Miami, Florida 33136-3912.

27. DERM has determined and the Respondent agrees, that due to the violations specified in paragraphs 4, 6, and 7 and due to the length of time that the City has been out of compliance with the Code, a civil penalty of forty thousand dollars ($40,000) is appropriate. The Respondent shall, within ninety (90) days of the effective date of this Agreement, submit a certified check made payable to "*Miami-Dade County*". The payment shall be sent to DERM, Cashier's Office, c/o Tricia Kong (DWO-47), 3rd Floor, 701 NW 1st Court, Miami, FL 33136. Payment shall include a reference to "DWO-47 – penalty" to ensure proper crediting.

28. The Respondent is encouraged to mitigate all or a portion of the penalty assessed pursuant to paragraph 27 herein by the implementation of a DERM-approved in-kind project(s), equaling or exceeding 150% of the penalty assessed, which shall result in sewer improvements that directly benefit the City's citizens and support the protection of public health. If the Respondent seeks to mitigate all or a portion of the penalty, the Respondent shall within ninety (90) days of the effective date of this Agreement, submit an "In-Kind Project Proposal". Any in-kind project(s) shall not be a project, improvement or rehabilitation that is required pursuant to the provisions of the Code, this Consent Agreement, or the Federal Consent Decree. Should the Respondent fail to provide in-kind services in the manner approved by DERM, the Respondent shall pay the prorated amount of a forty-thousand-dollar ($40,000) penalty based on the outstanding percentage of in-kind project(s) remaining. The "In-Kind Project Proposal" shall be submitted to Tricia.Kong@miamidade.gov.

29. In the event the Respondent fails to timely comply with the obligations listed herein, the Respondent shall pay DERM a civil penalty per violation per day for each day of non-compliance in accordance with the schedule set forth below until such time as the Respondent cures the violation(s):

Penalty Per Violation Per Day	**Period of Noncompliance**
$500.00	1st through 30th day
$750.00	31st through 60th day
$1,500.00	61st through 90th day
$2,000.00	91st day and beyond

Said payment shall be made by the Respondent to DERM within ten (10) days of receipt of written notification that payment of penalties is required. The Respondent hereby acknowledges that if DERM files a court action against the Respondent to compel compliance with this Addendum after more than 91 days of noncompliance with any of the obligations listed herein, the cap on penalties herein may no longer apply and the penalty provisions contained in Sections 24-29 and 24-31 of the Code shall apply, at the County's discretion.

GENERAL PROVISIONS

30. This Agreement constitutes a lawful order of the Director of the DERM and violation of any requirement may subject Respondent to further enforcement including court action.

31. The terms and conditions set forth in this Consent Agreement may be enforced in any court of competent jurisdiction pursuant to Chapter 24 of the Code of Miami-Dade County, the Florida Administrative Code, or the Florida Statutes.

32. Entry into this Consent Agreement does not relieve Respondent of the responsibility to comply with applicable federal, state, or local laws, regulations and ordinances.

33. Where timetables cannot be met, due to circumstances beyond Respondent's control, Respondent shall submit a written request for extension of the timetable(s), with supporting documents to DERM, stating the cause(s) of any delay or non-compliance and the extension of time requested. A determination of the reasonableness of the delay or non-compliance shall be made by DERM for the purposes of continuation of enforcement actions and the imposition of penalties pursuant to paragraph 29 of this Agreement.

34. This Agreement shall neither be evidence of a prior violation of the Code nor shall it be deemed to impose any limitation upon any investigation or action by DERM in the enforcement of Chapter 24 of the Code of Miami-Dade County, the Florida Administrative Code or the Florida Statutes.

35. In consideration of the complete and timely performance by the Respondent of the terms and conditions set forth in this Agreement, DERM waives its rights to seek judicial imposition of damages or criminal or civil penalties for the matters alleged in this Agreement.

36. This Consent Agreement shall become effective upon the date of execution by the Director of DERM or the Director's designee.

_____ _____

Date Darvin Williams, Interim City Manager
City of Opa-locka

State of Florida
County of Miami-Dade

The foregoing instrument was acknowledged before me by means of (*how the individual appeared check one*):
☐ physical presence ☐ online notarization this _____ day of _____, 20_____.
(*date*) (*month*) (*year*)

by _____
(*name of individual*)

Individual identified by: ☐ personal knowledge ☐ satisfactory evidence _____.
(*type*)

(*Affix Florida Notary Seal above*)	_____ (Signature of Notary Public) _____ (typed, printed, or stamped name of Notary Public)

_____

DO NOT WRITE BELOW THIS LINE – GOVERNMENT USE ONLY

_____ _____

Date Lisa M. Spadafina, Director
Division of Environmental Resources Management

_____ _____

Witness Witness

EXHIBIT “A”

MIAMI-DADE COUNTY
Carlos A. Gimenez, Mayor

Department of Regulatory and Economic Resources
Environmental Resources Management
701 NW 1st Court, 7th Floor
Miami, Florida 33136-3912
T 305-372-6600 F 305-372-6893
miamidade.gov

April 28, 2016

Mr. David Chiverton, City Manager
City of Opa Locka
3400 NW 135 Street, Building B
Opa Locka, FL 33054

CERTIFIED MAIL NO 7008 1830 0002 8170 5657
RETURN RECEIPT REQUESTED

Re: City of Opa Locka Sanitary Sewer Collection & Transmission System (DWO-47)

Dear Mr. Chiverton:

Reference is made to the Consent Agreement (copy enclosed) executed on December 18, 2015 between the City and the Department of Regulatory and Economic Resources Division of Environmental Resources Management (DERM). Said Agreement provides for compliance with the water and wastewater regulations relating to the City's sanitary sewer collection and transmission system, Potable Water and Domestic Wastewater permits and utility service fee requirements.

A review of DERM records has revealed that submittal and approval of a payment plan for compliance with the City's water and sewer utility service fee requirement pursuant to paragraph 7 of the referenced Consent Agreement and Section 24-34 of the Code of Miami-Dade County has not been made. In order to expeditiously resolve this matter the City is required to submit to DERM an approvable payment plan within thirty (30) days of receipt of this correspondence. Failure to comply with the above may result in the imposition of non-compliance civil penalties as set forth in paragraph 11 of the Consent Agreement.

If you have any questions regarding the above, please contact Mr. Rashid Istambouli, P.E., Chief of DERM's Pollution Regulation Division at (305) 372-6907 or by email at istamr@miamidade.gov , or myself at (305)372-6754.

Sincerely,

Lee N. Hefty, Director
Division Environmental Resources Management

Enclosure

c: Honorable Myra L. Taylor, Mayor, City of Opa Locka
Rashid Z. Istambouli, P.E., Chief-Pollution Regulation, RER-DERM
Carlos Hernandez, P.E., Section Manager, RER-DERM
Johnny Vega, Section Manager, RER-DERM

Delivering Excellence Every Day

MIAMI-DADE COUNTY DEPARTMENT OF REGULATORY AND ECONOMIC RESOURCES, DIVISION OF ENVIRONMENTAL RESOURCES MANAGEMENT Complainant, vs. City of Opa-Locka David Chiverton, Interim City Manager Respondent.	)	**CONSENT AGREEMENT**

This Agreement is entered into by and between Miami-Dade County Department of Regulatory and Economic Resources, Division of Environmental Resources Management (hereinafter referred to as "DERM") and The City of Opa-Locka (hereafter referred to as "Respondent") pursuant to Section 24-7(15)(c) of Chapter 24 of the Code of Miami-Dade County, Florida (the Code). This Agreement shall serve to redress violations of Chapter 24, Miami-Dade County Code and the Second and Final Consent Decree, Paragraph 22, dated September 11, 1995, Case Number CIV-93-1109, United States vs. Miami-Dade County and deficiencies in Respondent's sanitary sewer collection system operating under Domestic Wastewater Operating Permit DWO-47 issued by the DERM in accordance with Section 24-18 of the Code of Miami-Dade County that serves the City of Opa-Locka, located in Miami-Dade County, Florida. The DERM finds and Respondent acknowledges the following:

FINDINGS OF FACTS

1. DERM is an agency of Miami-Dade County, Florida, a political subdivision of the State of Florida which is empowered to provide for pollution control and protection of the environment within Miami-Dade County pursuant to Article VIII, Section 6 of the Florida Constitution, the Miami-Dade County Home Rule Charter and Section 403.182 of the Florida Statutes. DERM has jurisdiction over matters addressed in this Consent Agreement.

2. The Respondent previously entered into an administrative Consent Agreement with DERM dated October 26, 2009, (2009 Agreement) in order to redress violations of Section 24-42.2 of the Code and violations of the Consent Decree dated September 11,1995. The Respondent is the owner and operator of a public sanitary sewer collection and transmission system that is in violation of the provisions of Section 24-42.2 of Chapter 24 of the Code, which provides for evaluation of sanitary sewer collection systems in order to identify and reduce infiltration and inflow into the public sanitary sewer collection and transmission systems within Miami-Dade County. On October 27, 2014 the Respondent requested of DERM an extension of time to complete the requirements of the 2009 Agreement. The Respondent has failed to implement a Sanitary Sewer Evaluation Survey (SSES) and submit a report to DERM on or before October 26, 2014. In addition to the above, due to non-compliance with the water and sewer utility service fee requirements the Respondent has failed to obtain the required Potable Water Operating Permit and Domestic Wastewater Operating Permit for the 2015 permit year (December 1, 2014 - November 30, 2015), pursuant to Chapter 24 of the Code. As a result of the Respondent's failure to obtain the required operating permits, on July 15, 2016 DERM

imposed a moratorium on City approval of any new projects related to the Respondent's water and wastewater utilities.

3. The Respondent submitted a Sanitary Sewer System Planning Report including a Financial Certification to the Florida Department of Environmental Protection (FDEP). The FDEP has approved a State Revolving Fund in order to finance the requirements of the above referenced Consent Decrees and the requirements of Chapter 24 of the Code.

4. Respondent hereby consents to this Agreement without either admitting or denying the allegations made by DERM in the finding of facts listed above. This Agreement shall upon execution supersede the 2009 Agreement.

5. In an effort to insure continued protection of the health and safety of the public and the environment of Miami-Dade County and to facilitate compliance with Sections 24-42.2 and 24-29 of the Code and to avoid time-consuming and costly litigation, the parties hereby agree to the following, and is hereby Ordered:

COMPLIANCE AND REPORTING REQUIREMENTS

6. Respondent shall on or before November 12, 2016, submit a complete Sanitary Sewer Evaluation Survey (SSES) report including all requirements outlined under the Second Cycle SSES Phases I, II and III Guidelines, a copy of which is attached hereto as Exhibit A. The report shall be submitted to DERM, 701 NW 1st Court, 7th Floor, Miami, Florida, 33136, Attention: Carlos Hernandez, P.E., Chief, Wastewater Permitting Section for review and approval. Any of the Respondent's pump station basins which have an infiltration and inflow

that is not less than five thousand (5,000) gallons per inch pipe diameter, per day, per mile of pipe and laterals by November 12, 2016, shall be placed under moratorium and no new additional sewage flows will be approved by DERM and no new Building permits or changes of use applications that increase sewage flows, calculated in accordance with Chapter 24, shall be approved by the Respondent's Building Official, or any other person, until such time as the pump station basins are brought into compliance as determined by DERM.

7. Within 90 days of the effective date of this Agreement, Respondent shall submit to DERM for review and approval, a proposed plan including timeframes for submittal of the past due utility service fees collected in FY 2013-2014. The plan shall include a completed Water & Sewer Utility – County Service Fee Summary Report, a copy of which is attached hereto as Exhibit B. Said plan shall include payment of late charges of one and one half (1 ½) percent of the unpaid balance of the fee for each month or part of each month that the fees remain unpaid, pursuant to the provisions of Section 24-34 of the Code. Respondent shall implement the plan as approved by DERM.

8. This Agreement constitutes a lawful order of the Director of the DERM and is enforceable in any court of competent jurisdiction. Violation of any requirement of this Agreement may result in further enforcement action by DERM against the Respondent. Each violation of any of the terms or conditions of this Agreement by the Respondent shall constitute a separate offense.

SETTLEMENT COSTS

9. The Respondent hereby certifies that Respondent has the financial ability to comply with the terms or conditions set forth herein and to comply with any payment requirements specified in this Agreement.

10. Respondent shall, within thirty (30) days from the effective date of this Agreement, submit a certified check **made payable to Miami-Dade County (indicate file no. DWO-47 on check)** in the amount of $2,000.00 to cover administrative and follow-up costs in this matter. Payment shall be sent to Miami-Dade County. Environmental Resources Management, Department of Regulatory and Economic Resources, 701 NW 1st Court, Cashier's Office, 3rd Floor, Miami, Florida 33136-3912, c/o Francisco Verrire, Code Enforcement Officer.

11. In the event Respondent fails to comply with any of the requirements of paragraphs, 6 and 7 of this Consent Agreement, the Respondent shall pay DERM a civil penalty of $100.00 per day for each day of non-compliance, and the Respondent shall be subject to enforcement action in a court of competent jurisdiction for such failure pursuant to the provisions set forth in Chapter 24 Miami-Dade County Code. Within thirty (30) days of written notice from DERM, Respondent shall make payment of the appropriate penalties to Miami-Dade County by check or money order. Payment shall be sent to DERM, 701 NW 1st Court, Cashier's Office, 3rd Floor, Miami, Florida 33136.

SAFETY PRECAUTION

12. Respondent shall maintain the sanitary sewer system, during the pendency of this Agreement, in a manner that shall not pose a hazard or threat to the public at large or the environment and shall not cause a nuisance or a sanitary nuisance as set forth in Chapter 24, of the Code of Miami-Dade County.

GENERAL PROVISIONS

13. The terms and conditions set forth in this Consent Agreement may be enforced in any court of competent jurisdiction pursuant to Chapter 24, of the Code of Miami-Dade County, the Florida Administrative Code, or the Florida Statutes.

14. Entry into this Consent Agreement does not relieve Respondent of the responsibility to comply with applicable federal, state, or local laws, regulations and ordinances.

15. Where timetables cannot be met, due to circumstances beyond Respondent's control, Respondent shall submit a written request for extension of the timetable(s), which shall not exceed six months, with supporting documents to DERM, stating the cause(s) of any delay or non-compliance and the extension of time requested. A determination of the reasonableness of the delay or non-compliance shall be made by DERM for the purposes of continuation of enforcement actions and the imposition of penalties pursuant to paragraph 11 of this Agreement. In no event shall any extension be granted beyond six months of any due date.

16. This Agreement shall neither be evidence of a prior violation of the Code nor shall it be deemed to impose any limitation upon any investigation or action by DERM in the

enforcement of Chapter 24 of the Code of Miami-Dade County, the Florida Administrative Code or the Florida Statutes.

17. In consideration of the complete and timely performance by the Respondent of the terms and conditions set forth in this Agreement, DERM waives its rights to seek judicial imposition of damages or criminal or civil penalties for the matters alleged in this Agreement.

18. Upon execution of this consent agreement. DERM shall lift the moratorium on new projects related to the Respondent's water and waste water utilities.

19. This Consent Agreement shall become effective upon the date of execution by the Director of DERM.

December 17, 2015
Date

David Chiverton, Interim City Manager
City of Opa-Locka

Before me, the undersigned authority, personally appeared

David Chiverton,

who after being duly sworn, deposes and says that he has read and agreed to the foregoing.

Subscribed and sworn to before me this 17 day of December, 2015.

by: David Chiverton.
(Name of Affiant)

Personally Known ✓ or Produced Identification _____.
(Check One)

Type of Identification Produced: _____.

Shamecca L. Johnson.
Notary Public

Notary Public State of Florida
Shamecca L Johnson
My Commission FF 073424
Expires 11/26/2017

FOR OFFICE USE ONLY

12-18-15
Date

Lee N. Hefty, Director
Division of Environmental Resources Management
Department of Regulatory and Economic Resources

Witness

Witness

EXHIBIT “B”

MIAMI-DADE COUNTY
Carlos A. Gimenez, Mayor

Department of Regulatory and Economic Resources
Environmental Resources Management
701 NW 1st Court, 6th Floor
Miami, Florida 33136-3912
T 305-372-6902 F 305-372-6630
miamidade.gov

February 19, 2019

Newall J. Daughtrey, Acting City Manager
City of Opa-Locka
780 Fisherman Street, 4th Floor
Opa-Locka, FL 33054

Certified Mail No. 7014 1200 0000 1634 4867
Return Receipt Requested

Re: City of Opa-Locka (City) Sanitary Sewer Collection and Transmission System Operating under Domestic Wastewater Permit (DWO-47) Executed Administrative Consent Agreement

Dear Mr. Daughtrey:

Please find enclosed original Consent Agreements which were executed by the Department of Regulatory and Economic Resources, Division of Environmental Resources Management (DERM) on February 19, 2019.The Consent Agreement serves to assist the City in permanently resolving the on-going sanitary sewer overflows and the deficiencies within the City's wastewater collection and transmission system. Please be advised that the date of execution initiates the specific timeframes for compliance as set forth in the Consent Agreement.

If you have any questions regarding the technical requirements of the Agreement, please contact Mr. Carlos L. Hernandez, P.E., Chief of DERM's Water and Wastewater Division at (305) 372-6600 or by email at hernac@miamidade.gov. For all other questions regarding this Agreement, please contact Eva Lizardo of DERM's Code Enforcement Section at (305) 372-6617 or by email at lizare@miamidade.gov.

Sincerely,

Donna Gordon for,

Lee N. Hefty, Director
Division of Environmental Resources Management

Enclosure: Administrative Consent Agreement

cc: Opa-Locka Mayor and City Commission: Matthew Pigatt, Joseph L. Kelley, Sherelean Bass, & Alvin Burke
mail to: City Commission Chambers, 215 N. Perviz AVE, Opa-Locka, FL 33054
Commissioner Barbara J. Jordan, District 1 (district1@miamidade.gov)
Esin Abia – Director & Building Official - Building & License, City of Opa-locka (eabia@opalockafl.gov)
Airia Austin - Director - Public Works & Utilities, City of Opa-locka (aaustin@opalockafl.gov)
Samir Elmir, P.E., Department of Health (Samir.Elmir@flhealth.gov)
Anthony Cotarelo, PE, Miami – Dade Water & Sewer Department (Antonio.Cotarelo@miamidade.gov)
Jason Andreotta, Florida Department of Environmental Protection (Jason.Andreotta@FloridaDEP.gov)
DERM - Carlos Hernandez, PE; Donna Gordon; Eva Lizardo

Delivering Excellence Every Day

MIAMI-DADE COUNTY DEPARTMENT OF REGULATORY AND ECONOMIC RESOURCES, DIVISION OF ENVIRONMENTAL RESOURCES MANAGEMENT Complainant, vs. City of Opa-Locka Newall J. Daughtrey, Acting City Manager Respondent.	)	**CONSENT AGREEMENT**

This Agreement is entered into by and between Miami-Dade County Department of Regulatory and Economic Resources, Division of Environmental Resources Management (hereinafter referred to as "DERM") and the City of Opa-Locka (hereafter referred to as "Respondent") pursuant to Section 24-7(15)(c) of Chapter 24 of the Code of Miami-Dade County, Florida (the Code). This Agreement shall serve to redress violations of Chapter 24, Miami-Dade County Code and the Second and Final Consent Decree, Paragraph 22, dated September 11, 1995, Case Number CIV-93-1109, United States vs. Miami-Dade County and the Consent Decree, dated June 6, 2013, Case Number 1:12-cv-24400 FAM, United States vs. Miami-Dade County, specifically addressing the on-going and repeated sanitary sewer overflows causing sanitary nuisance conditions, which pose a significant threat to public health, welfare and safety; and the deficiencies in Respondent's utility wastewater collection and transmission system (WCTS) operating under Domestic Wastewater Operating Permit DWO-47 issued by the DERM in accordance with Section 24-18 of the Code of Miami-Dade County, that serves the City of Opa-Locka, located in Miami-Dade County, Florida. The DERM finds and Respondent acknowledges the following:

FINDINGS OF FACTS

1. DERM is an agency of Miami-Dade County, Florida, a political subdivision of the State of Florida which is empowered to provide for pollution control and protection of the environment within Miami-Dade County pursuant to Article VIII, Section 6 of the Florida Constitution, the Miami-Dade County Home Rule Charter and Section 403.182 of the Florida Statutes. DERM has jurisdiction over matters addressed in this Consent Agreement.

2. The Respondent is the current owner and operator of a utility wastewater collection and transmission system consisting of: Pumping Stations, Force Mains and Gravity Sewer Mains and permitted under DWO-47.

3. Respondent's utility wastewater collection and transmission system is in violation of the provisions of Section 24-42.2 of Chapter 24 of the Code, which provides for evaluation of wastewater collection and transmission systems in order to identify and reduce infiltration and inflow into the systems within Miami-Dade County. The Respondent previously entered into administrative Consent Agreements with DERM dated October 26, 2009 and on December 18, 2015 in order to redress violations of Section 24-42.2 as referenced above as well as Sections 24-18 and 24-34, relating to non-compliance with permit and utility service fee requirements; and violations of the Consent Decree dated September 11, 1995. The Respondent has failed to implement a Sewer System Evaluation Survey (SSES) for the complete system that fully complies with the requirements of the Code.

4. On October 2, 2018, DERM issued the Respondent a Notice for repeated sanitary sewer overflows causing sanitary nuisance conditions, failure by Respondent to comply with reporting and response requirements for sanitary sewer overflows, and for extensive deficiencies in

Respondent's pump stations in violation of Sections 24-18, 24-25(3), 24-27, 24-28, 24-29, and 24-42.3(5) of Chapter 24, Code of Miami-Dade County and Rules 62-604.500(2) and 62-604.500(3) of the Florida Administrative Code. In addition, the Respondent did not fully comply with the requirements in previous Departmental correspondence dated September 22, 2017, August 1, 2018, and September 10, 2018 for similar violations.

5. Respondent hereby consents to this Agreement without either admitting or denying the allegations made by DERM in the finding of facts listed above.

6. In an effort to insure continued protection of the health and safety of the public and the environment of Miami-Dade County and to facilitate compliance with the Code and to avoid time-consuming and costly litigation, the parties hereby agree to the following, and is hereby Ordered:

COMPLIANCE AND REPORTING REQUIREMENTS

7. The Respondent shall implement efforts to effectively respond to all utility sanitary sewer overflows including but not limited to:

    a. Within 24 hours of each occurrence, pump-out and clean-up of all impacted areas and apply adequate amounts of powdered disinfectant on a consistent basis for all sewage overflows in order to abate the sanitary nuisance conditions which pose a threat to the health, safety, and welfare of the public.

    b. Using all available means necessary to remediate the sanitary nuisance within 24 hours as referenced above, and within 24 hours or other such reasonable time as determined by DERM, initiate actions including obtaining assistance from other utilities, contracts, vendors or contractors as applicable, if the Respondent determines that they are unable

to effectively self-perform due to lack of staff, equipment, materials, supplies or other limitations or restrictions.

c. Securing all utility pump stations to prevent public access.

8. The Respondent shall immediately comply with all reporting requirements to DERM including but not limited to:

   a. All sanitary sewer overflows and surcharge conditions whether they are referred to, or observed in Respondent's wastewater collection and transmission system, as soon as possible but no later than four (4) hours after documenting the non-compliant condition. In addition to notifying DERM via the emergency response line (305-372-6955), the Respondent shall complete the Sanitary Sewer Overflow form (Exhibit A) and submit said form to DERM's Water & Wastewater Division within 24 hours of the occurrence of such conditions.

   b. All sanitary sewer overflows whether they be referred to, or are observed by the Respondent's utility, located on **private** property, shall be reported to the DERM's emergency response line (305-372-6955) as soon as possible but no later than four (4) hours from discovery.

   c. The Respondent shall provide the DERM emergency response phone number (305 372-6955) to the residents including but not limited to, posting said number on the Respondent's website.

9. The Respondent shall within thirty (30) days of the effective date of this Agreement, submit to DERM a complete inventory of the Respondent's owned, rented, leased, or contracted equipment related to the operation of its wastewater collection and transmission system. Said

inventory shall include all emergency generators, self-priming by-pass pumps, and necessary equipment to perform maintenance or replacement of the sanitary sewer system components.

10. The Respondent shall within one hundred-twenty (120) days of the effective date of this Agreement, submit to DERM a plan to replace/repair all damaged and/or inoperative pumps and to stock replacement parts and pumps. Said plan shall include Scope, Schedule, and Budget with a Cost Estimate in spreadsheet format. The plan should also include any equipment that the Respondent deems necessary to perform repairs or installations of the required pumps.

11. The Respondent shall within one hundred-twenty (120) days of the effective date of this Agreement, submit to DERM a summary report documenting all **approved** Building Permit Applications, Certificate of Use, Occupational License, and/or Local Business Tax Receipts. Said report shall continue to be submitted on a monthly basis for the duration of this consent agreement.

12. The Respondent shall within one hundred twenty (120) days of the effective date of this Agreement, submit to DERM a plan to reduce Infiltration and Inflow for each basin that exceeds 5,000 gpd/idm. Said plan shall include Scope, Schedule, and Budget with a Cost Estimate in spreadsheet format. All reports shall be submitted to DERM, 701 NW 1st Court, 7th Floor, Miami, Florida, 33136, Attention: Carlos Hernandez, P.E., Chief, Water and Wastewater Division for review and approval. Any of the Respondent's pump station basins which have an infiltration and inflow that is not less than five thousand (5,000) gallons per inch pipe diameter, per day, per mile of pipe and laterals, shall remain under moratorium and no new additional sewage flows will be approved by DERM and no new Building permits or changes of use applications that increase sewage flows, calculated in accordance with Chapter 24, shall be

approved by the Respondent's Building Official, or any other person, until such time as the pump station basins are brought into compliance as determined by DERM.

13. The subject submittals required pursuant to this Agreement are subject to review and approval, approval with conditions, or disapproval by DERM. Implementation of the approved plans shall be completed within the timeframes provided in the DERM approval. If DERM disapproves the plans, an itemized explanation will be included in the disapproval letter. The Respondent shall address all items detailed in the disapproval letter within the timeframes provided in said letter.

14. Respondent agrees to cooperate with DERM to immediately resolve threats to public health, welfare, and safety. In the event Respondent does not, within a reasonable timeframes stipulated by DERM, resolve any and all threats to public health, welfare, and safety; DERM may take actions including but not limited to remedial or corrective actions to prevent endangerment to the public health, welfare, and safety and the environment, pursuant to the provisions set forth in Sections 24-7(27) and 24-7(15) (c) of the Code of Miami-Dade County.

15. This Agreement constitutes a lawful order of the Director of the DERM and violation of any requirement may subject Respondent to further enforcement including court action.

SETTLEMENT COSTS

16. The Respondent hereby certifies that Respondent has the financial ability to initiate compliance and shall endeavor to comply with the terms or conditions set forth herein and to comply with any payment requirements specified in this Agreement.

17. DERM has determined that due to the continuing violations specified in paragraph three (3) herein, that a civil penalty of $10,000.00 is appropriate. Payment of said penalty will be held in abeyance at this time and may be fully mitigated based on the Respondent's timely compliance with the requirements of this Agreement. Any applicable penalty shall be made by certified check and **made payable to Miami-Dade County (indicate file no. DWO-47 on check).**The payment shall be sent to Miami-Dade County, Environmental Resources Management, Department of Regulatory and Economic Resources, 701 NW 1st Court, Cashier's Office, 3rd Floor, Miami, Florida, 33136-3912, c/o Eva Lizardo, Code Enforcement Officer.

18. Respondent shall, within sixty (60) days from the effective date of this Agreement, submit a certified check **made payable to Miami-Dade County (indicate file no. DWO-47 on check)** in the amount of $500 to cover administrative and follow-up costs in this matter. Payment shall be sent to Miami-Dade County. Environmental Resources Management, Department of Regulatory and Economic Resources, 701 NW 1st Court, Cashier's Office, 3rd Floor, Miami, Florida 33136-3912, c/o Eva Lizardo, Code Enforcement Officer.

19. In the event Respondent fails to comply with any of the requirements of paragraphs 7, 8, 9, 10, 11, and 12 of this Consent Agreement, the Respondent shall pay DERM a civil penalty of $50.00 per day for each day of non-compliance, and the Respondent shall be subject to enforcement action in a court of competent jurisdiction for such failure pursuant to the provisions set forth in Chapter 24 Miami-Dade County Code. Payment of said penalty may be fully mitigated upon timely compliance by Respondent. Within sixty (60) days of written notice from DERM, Respondent shall make payment of the appropriate penalties to Miami-Dade County by check or money order. Payment shall be sent to DERM, 701 NW 1st Court, Cashier's Office, 3rd Floor, Miami, Florida 33136.

SAFETY PRECAUTIONS

20. Respondent shall use all available resources in an effort to maintain the wastewater collection and transmission system, during the pendency of this Agreement, in a manner that shall not pose a hazard or threat to the public at large or the environment and shall not cause a nuisance or a sanitary nuisance as set forth in Chapter 24, of the Code of Miami-Dade County.

21. Respondent shall notify DERM via phone at **(305) 372-6955** of any sanitary nuisance condition documented or referred to the Respondent within four (4) hours of said documentation of referral.

GENERAL PROVISIONS

22. The terms and conditions set forth in this Consent Agreement may be enforced in any court of competent jurisdiction pursuant to Chapter 24, of the Code of Miami-Dade County, the Florida Administrative Code, or the Florida Statutes.

23. Entry into this Consent Agreement does not relieve Respondent of the responsibility to comply with applicable federal, state, or local laws, regulations and ordinances.

24. Where timetables cannot be met, due to circumstances beyond Respondent's control, Respondent shall submit a written request for extension of the timetable(s), with supporting documents to DERM, stating the cause(s) of any delay or non-compliance and the extension of time requested. A determination of the reasonableness of the delay or non-compliance shall be made by DERM for the purposes of continuation of enforcement actions and the imposition of penalties pursuant to paragraph 19 of this Agreement.

25. This Agreement shall neither be evidence of a prior violation of the Code nor shall it be deemed to impose any limitation upon any investigation or action by DERM in the enforcement of Chapter 24 of the Code of Miami-Dade County, the Florida Administrative Code or the Florida Statutes.

26. In consideration of the complete and timely performance by the Respondent of the terms and conditions set forth in this Agreement, DERM waives its rights to seek judicial imposition of damages or criminal or civil penalties for the matters alleged in this Agreement.

27. This Consent Agreement shall become effective upon the date of execution by the Director of DERM.

_____
Date

Newall J. Daughtrey, Acting City Manager
City of Opa-Locka

Before me, the undersigned authority, personally appeared

Newall Daughtrey,

who after being duly sworn, deposes and says that he has read and agreed to the foregoing.

Subscribed and sworn to before me this 15th day of FEB, 2018 19

by: _____.
(Name of Affiant)

Personally Known ✓ or Produced Identification _____.
(Check One)

Type of Identification Produced: _____.

Notary Public

Notary Public State of Florida
Diane Cure-Darden
My Commission GG 201979
Expires 04/01/2022

FOR OFFICE USE ONLY

02/19/19
Date

Lee N. Hefty, Director
Division of Environmental Resources Management
Department of Regulatory and Economic Resources

Witness

Witness

EXHIBIT “C”

MIAMI-DADE COUNTY DEPARTMENT OF REGULATORY AND ECONOMIC RESOURCES, DIVISION OF ENVIRONMENTAL RESOURCES MANAGEMENT Complainant, vs. City of Opa-Locka Respondent.	)	**CONSENT AGREEMENT**

This Agreement is entered into by and between Miami-Dade County Department of Regulatory and Economic Resources, Division of Environmental Resources Management (hereinafter referred to as "DERM") and the City of Opa-Locka (hereafter referred to as "Respondent") pursuant to Section 24-7(15)(c) of Chapter 24 of the Code of Miami-Dade County, Florida (the Code). This Agreement shall serve to redress unauthorized municipal license approvals issued by the Respondent within the City of Opa Locka located in Miami-Dade County, Florida in violation of Chapter 24 of the Code.

The DERM finds and Respondent acknowledges the following:

FINDINGS OF FACTS

1. Miami-Dade County, Florida, is a political subdivision of the State of Florida. DERM is a division within the County's Department of Regulatory and Economic Resources and is empowered to provide for pollution control and protection of the environment within Miami-Dade County pursuant to Article VIII, Section 6 of the Florida Constitution, the Miami-Dade

County Home Rule Charter and Section 403.182 of the Florida Statutes. DERM has jurisdiction over matters addressed in this Consent Agreement.

2. The Federal Consent Decree between the United States of America, the State of Florida, and Miami-Dade County, dated June 6, 2013, in Case Number 1:12-cv-24400 FAM, in a case styled as United States of America vs. Miami-Dade County (hereafter "the Federal Consent Decree"), requires in part that the County generally, and DERM specifically, establish and amend as appropriate Section 24-42.3 of Chapter 24 of the Code to require DERM's review and issuance of written certification of sanitary sewer system collection, transmission and treatment capacity prior to the approval of all Development Orders, including but not limited to building permits, certificates of occupancy, certificates of completion, certificates of use or municipal occupational licenses.

3. The Respondent is the current owner and operator of a utility wastewater collection and transmission system consisting of: pumping stations, force mains and gravity sewer mains and permitted under Miami-Dade County Domestic Wastewater Operating Permit DWO-47.

4. The Respondent entered into an Administrative Consent Agreement with DERM on February 19, 2019 in order to redress violations of section 24-42.2 as well as sections 24-18 and 24-34 of the Code, relating to non-compliance with permit and utility service fee requirements and violations of the Consent Decree dated September 11, 1995. As a condition of the Agreement, DERM required the Respondent to submit to a summary report documenting all **approved** Building Permit Applications, Certificate of Use, Occupational License, and/or Local Business Tax Receipts. A complete list of Occupational Licenses issued by the Respondent in 2019 was subsequently submitted for DERM review.

5. DERM's review of the Occupational License (hereafter referred to as "OL") report (Exhibit 1) documented that multiple local businesses had been issued municipal operating authorizations in the form of OLs, without first obtaining DERM's written approval as required by Chapter 24 of the Code. The review further revealed that approximately sixty-two (62) OLs had been issued by the Respondent even though said license application was disapproved by DERM. This resulted in businesses operating in the City of Opa Locka, Florida without required DERM annual operating permits, in violation of section 24-18 of Chapter 24 of the Code, operating without approved Fats, Oils and Grease control devices, in violation of section 24-42.6 of Chapter 24 of the Code, and may also be operating while served by public sanitary sewer systems in moratorium, in violation of section 24-42.3 of Chapter 24 of the Code. At a minimum, sixty-eight (68) OLs not routed to DERM for review, appear to require DERM operating permits in addition to DERM approval.

6. On November 4, 2020, DERM issued an enforcement Notice to Respondent which required Respondent to Cease and Desist from issuing municipal operating authorizations without DERM's review and prior written approval.

7. Respondent hereby consents to this Agreement without either admitting or denying the allegations made by DERM in the finding of facts listed above.

8. In an effort to resolve the violations described herein so as to ensure continued protection of the health and safety of the public and the environment of Miami-Dade County and to facilitate compliance with the Code and to avoid time-consuming and costly litigation, the parties hereby agree to the following, and is hereby Ordered pursuant to Section 24-7(15) of the Code :

COMPLIANCE AND REPORTING REQUIREMENTS

9. The Respondent shall within thirty (30) days of DERM providing the Respondent with Plan Review guidance documents, make said information available to the residents and business owners within the City, including but not limited to, posting a link to the DERM Plan Review informational page on the Respondent's website. The guidance documents shall include among other items, DERM contact information and a detailed explanation of the submittal and approval process.

10. The Respondent shall within thirty (30) days of the effective date of this Agreement, submit to DERM a list of all types of Development Orders/Municipal Approvals issued by the Respondent which authorize the establishment of new businesses, re-authorize existing businesses, authorize changes in use, expansions and additions to existing businesses, construction of new buildings, alterations of existing buildings, additions and expansion of existing buildings and/or occupancy of new and existing buildings. This list shall include any of the following or their municipal equivalent, where otherwise required pursuant to its municipal laws: a Certificate of Use (CU), Temporary CU, Occupational License (OL), Temporary OL, Local Business Tax (LBT), Temporary LBT, Certificate of Completion (COC), Temporary COC, Certificate of Occupancy (CO), Temporary CO and/or Building or Building Subsidiary Permits. The list shall also include pertinent information such as an explanation of categories available for each type of permit and/or authorization issued.

11. Respondent shall, within ninety (90) days from the date of this Agreement, issue written notification to each business identified as either a disapproved license application or requiring a DERM operating permit in Exhibit 1 (Note: these are color coded red and yellow respectively).

The notification shall require each business owner to prepare and submit to the Respondent, within ninety (90) days after receipt of notification, a certificate of use application or municipal equivalent and/or building permit application, as applicable. The notification shall advise that failure to submit said applications(s) within the time period provided will be grounds for the Respondent to initiate enforcement action to obtain compliance. The notification shall also advise that the Respondent will direct all applications to Miami-Dade County for review and approval, at which time additional regulatory obligations may be required, including but not limited to the assessment of any applicable impact fees and the requirement to obtain DERM operating permits. Each written notification to the business owners shall be delivered by Certified Mail and shall copy each corresponding property owner and "DERM, c/o Eva Lizardo, 701 NW 1st Court, 6th Floor, Miami, Florida, 33136-3912."

12. The Respondent shall no later than August 1, 2021, issue written notification to each business identified in Exhibit 1 as having a license without a DERM review. These businesses are listed in Exhibit 1 without any coloration. Of this group, DERM does not need to review and/or approve OLs for the following categories: Peddler, Vending, Insurance (not physically located in the City), and home offices. The notification for all businesses excluding Peddler, Vending, Insurance (not physically located in the City), and home offices, shall require each business owner to prepare and submit to the Respondent, prior to renewing their Municipal Occupational License, a certificate of use application or municipal equivalent and/or building permit application, as applicable. The notification shall advise that failure to submit said applications(s) within the time period provided will be grounds for the Respondent to initiate enforcement action to obtain compliance and said license will not be renewed. The notification shall also advise that the Respondent will direct all applications to Miami-Dade County for

review and approval, at which time additional regulatory obligations may be required, including but not limited to the assessment of any applicable impact fees and the requirement to obtain DERM operating permits. Based on the review of information provided pursuant to Paragraph ten (10), DERM may further reduce the number of businesses requiring notification.

13. Respondent shall within one-hundred eighty (180) days of the effective date of this Agreement, submit a Corrective Action Plan(CAP) to DERM for review and approval, for the modification of Respondent's existing intake systems or processes, and/or the implementation of new intake systems or processes, for all applications listed in Paragraph ten (10) herein that are submitted to the Respondent for review and comment. The scope of DERM's review and approval of the CAP shall be based upon whether the CAP meets the minimum requirements identified below as (a) through (e) and the timeframes herein. DERM shall not dictate the manner in which these minimum objectives are implemented by Respondent. The modified or new systems, as applicable, shall be available for pre-deployment testing within twenty-four (24) months from DERM CAP approval and be fully deployed and functional within thirty-six (36) months from the effective date of this Agreement. Said CAP shall propose the implementation of measures which will ensure that:

    (a) Respondent's staff, its delegates and/or authorized agents, will correctly and consistently identify all submittals and applications which require DERM review and approval prior to Respondent's temporary and final approvals;
    (b) Respondent's staff, its delegates and/or authorized agents, will not issue or grant any approvals of submittals and applications subject to the code sections of Chapter 24 as referenced in this Agreement without the Respondent's confirmation of DERM's prior written approval of the application;
    (c) Each and every approval, temporary and final, issued or granted by Respondent's staff, its delegates and/or authorized agents, is memorialized in a form that captures

the date and time of Respondent's approval, the name of Respondent's staff approving the application, the type of application being approved, the form of DERM's approval, and an image or copy of DERM's approval;

(d) All required information stored and available for DERM review for a period of no less than five (5) years;

(e) DERM has remote access to review and download data compiled from the processes implemented herein.

14. The submittals required pursuant to this Agreement are subject to review and approval, approval with conditions, or disapproval by DERM. Implementation of the approved submittals shall be completed within the timeframes provided in the DERM approval. Nothing herein shall prevent Respondent from requesting, and from DERM approving, extensions of time for good cause. If DERM disapproves any submittals, an itemized explanation will be included in the disapproval letter. The Respondent shall fully address all items detailed in the disapproval letter within the timeframes provided in said letter.

15. The Respondent shall by February 28,2021 submit to DERM a summary report documenting all new **approved** Building Permit Applications, Certificate of Use, Occupational License, and/or Local Business Tax Receipts issued in 2020. Said report shall continue to be submitted each quarter thereafter, providing information from the previous quarter, for the duration of this Consent Agreement. The frequency of submittals may be modified based on DERM review of the summary report. All reports shall be submitted to DERM, 701 NW 1st Court, 6th Floor, Miami, Florida, 33136, Attention: Eva Lizardo, Code Enforcement Officer.

16. This Agreement constitutes a lawful order of the Director of the DERM and violation of any requirement may subject Respondent to further enforcement including court action.

SETTLEMENT COSTS

17. The Respondent hereby certifies that Respondent has the financial ability to initiate compliance and shall endeavor to comply with the terms or conditions set forth herein and to comply with any payment requirements specified in this Agreement.

18. Due to the continuing violations specified in paragraph five (5) herein, the Respondent has agreed to mitigate this non-compliance through implementation of DERM-approved in-kind project(s), equaling or exceeding $37,500, which will result in improvements that directly benefit City of Opa Locka citizens and businesses and support the protection of public health. The Respondent shall, within thirty (30) days of the effective date of this Agreement, submit to DERM for review and approval a detailed "In-Kind Project Proposal." Any in-kind project(s) shall not be a project already required pursuant to Chapter 24 of the Code or the Federal Consent Decree.

19. Respondent shall, upon signing this Agreement, submit a certified check **made payable to Miami-Dade County (indicate file no. DWO-47 on check)** in the amount of $1,697 to cover administrative and follow-up costs in this matter. Payment shall be sent to Miami-Dade County. Environmental Resources Management, Department of Regulatory and Economic Resources, 701 NW 1st Court, Cashier's Office, 3rd Floor, Miami, Florida 33136-3912, c/o Eva Lizardo, Code Enforcement Officer.

20. In the event Respondent fails to comply with any of the requirements of paragraphs 9, 10, 11, 12, 13, 14, and 15 of this Consent Agreement, the Respondent shall pay DERM a civil penalty of $100.00 per day for each day of non-compliance, and the Respondent shall be subject to enforcement action in a court of competent jurisdiction for such failure pursuant to the

provisions set forth in Chapter 24 Miami-Dade County Code. Payment of said penalty may be fully mitigated upon timely compliance by Respondent. Within sixty (60) days of written notice from DERM, Respondent shall make payment of the appropriate penalties to Miami-Dade County by check or money order. Payment shall be sent to DERM, 701 NW 1st Court, Cashier's Office, 3rd Floor, Miami, Florida 33136, c/o Eva Lizardo, Code Enforcement Officer.

GENERAL PROVISIONS

21. The terms and conditions set forth in this Consent Agreement may be enforced in any court of competent jurisdiction pursuant to Chapter 24, of the Code of Miami-Dade County, the Florida Administrative Code, or the Florida Statutes.

22. Entry into this Consent Agreement does not relieve Respondent of the responsibility to comply with applicable federal, state, or local laws, regulations and ordinances.

23. Reports submitted by Respondent pursuant to paragraphs 10 and 15 of this Agreement shall be reviewed for completeness and accuracy and signed by an authorized City of Opa Locka senior management official with the following attestation:

    "*I certify under penalty of law that this document and all attachments were prepared under my direction or supervision in accordance with a system designed to assure that qualified personnel properly gather and evaluate the information submitted. Based on my inquiry of the person or persons who manage the system, or those persons directly responsible for gathering such information, the information submitted is, to the best of my knowledge and belief, true, accurate and complete. I am aware that there are significant penalties for submitting false information, including the possibility of fine and imprisonment for knowing violations.*"

24. Where timetables cannot be met, due to circumstances beyond Respondent's control, Respondent shall submit a written request for extension of the timetable(s), with supporting documents to DERM, stating the cause(s) of any delay or non-compliance and the extension of time requested. A determination of the reasonableness of the delay or non-compliance shall be made by DERM for the purposes of continuation of enforcement actions and the imposition of penalties pursuant to paragraph 20 of this Agreement.

25. This Agreement shall neither be evidence of a prior violation of the Code nor shall it be deemed to impose any limitation upon any investigation or action by DERM in the enforcement of Chapter 24 of the Code of Miami-Dade County, the Florida Administrative Code or the Florida Statutes.

26. In consideration of the complete and timely performance by the Respondent of the terms and conditions set forth in this Agreement, DERM waives its rights to seek judicial imposition of damages or criminal or civil penalties for the matters alleged in this Agreement.

27. This Consent Agreement shall become effective upon the date of execution by the Director of DERM.

Signatures on the following page

02/26/2021
Date

John E. Pate, City Manager
City of Opa-Locka

State of Florida
County of Miami-Dade
The foregoing instrument was acknowledged before me by means of (*how the individual appeared check one*):
☑ physical presence ☐ online notarization this 26th (*date*) day of February (*month*), 20 21 (*year*).

by John E. Pate
(*name of individual*)

Individual identified by: ☑ personal knowledge ☐ satisfactory evidence _____.
(*type*)

Notary Public State of Florida
Joanna Flores
My Commission GG 292935
Expires 01/21/2023

(*Affix Florida Notary Seal above*)

Joanna Flores
(Signature of Notary Public)

Joanna Flores
(typed, printed, or stamped name of Notary Public)

DO NOT WRITE BELOW THIS LINE – GOVERNMENT USE ONLY

3-3-2021
Date

Lee N. Hefty, Director
Division of Environmental Resources Management
Department of Regulatory and Economic Resources

Witness

Witness

Sponsored by: City Manager

RESOLUTION NO. 21-9837

A RESOLUTION OF THE CITY COMMISSION OF THE CITY OF OPA-LOCKA, FLORIDA, AUTHORIZING THE CITY MANAGER TO EXECUTE A CONSENT AGREEMENT WITH THE MIAMI-DADE COUNTY DEPARTMENT OF REGULATORY AND ECONOMIC RESOURCES, DIVISION OF ENVIRONMENTAL RESOURCES MANAGEMENT (DERM), SUBSTANTIALLY IN THE FORM ATTACHED HERETO AS EXHIBIT "A" AND RESOLVE ALLEGED BUILDING DEPARTMENT VIOLATIONS; PROVIDING FOR INCORPORATION OF RECITALS; PROVIDING FOR AN EFFECTIVE DATE

WHEREAS, the Miami-Dade County Department of Regulatory and Economic Resources, Division of Environmental Resources Management (DERM), alleges that the City of Opa-Locka ("City") has failed to comply with Chapter 24 of the Miami-Dade County Code of Ordinances; and

WHEREAS, a Consent Agreement with DERM would resolve all alleged and pending violations; and

WHEREAS, the City Commission of the City of Opa-Locka hereby authorizes the City Manager to negotiate a Consent Agreement with DERM pursuant to Resolution 19-9591; and

NOW THEREFORE, BE IT RESOLVED BY THE CITY COMMISSION OF THE CITY OF OPA LOCKA, FLORIDA:

Section 1. RECITALS ADOPTED.
The recitals to the preamble herein are incorporated by reference.

Section 2. AUTHORIZATION
The City Commission of the City of Opa-Locka hereby authorizes the City Manager to execute a Consent Agreement, substantially in the form attached as Exhibit "A", with Miami-Dade County Department of Regulatory and Economic Resources, Division of Environmental Resources Management (DERM) and resolve alleged violations of the Miami-Dade County Code of Ordinances.

SECTION 3. SCRIVENER'S ERRORS.

Sections of this Resolution may be renumbered or re-lettered and corrections of typographical errors which do not affect the intent may be authorized by the City Manager, or the City Manager's designee, without need of public hearing, by filing a corrected copy of same with the City Clerk.

Section 4. EFFECTIVE DATE.

This Resolution shall take effect immediately upon adoption and is subject to the approval of the Governor or his designee.

PASSED AND ADOPTED this 27th day of January, 2021.

Mayor Matthew A. Pigatt

Attest to:

Joanna Flores
City Clerk

Approved as to form and legal sufficiency:

Burnadette Norris-Weeks, P.A.
City Attorney

MOVED BY: Commissioner Burke

SECONDED BY: Commissioner Davis

Vote:	**5-0**
Commissioner Burke	YES
Commissioner Davis	YES
Commissioner Taylor	YES
Vice-Mayor Williams	YES
Mayor Pigatt	YES

City of Opa-locka
Agenda Cover Memo

Department Director:	Airia Austin			**Department Director Signature:**			
City Manager:	John E. Pate			**CM Signature:**			
Commission Meeting Date:	*01-27-2021*		**Item Type:** *(Enter X in box)*	**Resolution**	**Ordinance**		**Other**
				X			
Fiscal Impact: *(Enter X in box)*	**Yes**	**No**	**Ordinance Reading:** *(Enter X in box)*		**1st Reading**		**2nd Reading**
	x $0.00		**Public Hearing:** *(Enter X in box)*		**Yes**	**No**	**Yes** / **No**
						X	X
Funding Source: *Account#:*	*(Enter Fund & Dept)* Ex:		**Advertising Requirement:** *(Enter X in box)*		**Yes**		**No**
							X
Contract/P.O. Required: *(Enter X in box)*	**Yes**	**No**	**RFP/RFQ/Bid#:**				
	X						
Strategic Plan Related *(Enter X in box)*	**Yes**	**No**	**Strategic Plan Priority Area:**		**Strategic Plan Obj./Strategy:** *(list the specific objective/strategy this item will address)*		
	X		**Enhance Organizational** ☐ **Bus. & Economic Dev** ☐ **Public Safety** ■ **Quality of Education** ☐ **Qual. of Life & City Image** ■ **Communication** ☐				
Sponsor Name	City Manager		**Department:**		City Manager		

Short Title:

Acceptance of a DERM Consent Agreement

Staff Summary:

A Resolution of the City Commission of the City of Opa-locka, Florida, authorizing the City Manager to execute a consent agreement pertinent to the Building Depart compliance with the Miami-Dade Department of Reglatory and Economic Resources Division of Environmental Resourses Management DERM.

Financial Impact (FY 20 Budget)

Account	Description	Available	Project	Remaining Balance

Proposed Action:

Staff recommends approval of this resolution.

Attachment:

1. Agenda
2. DERM Consent Agreement
3. Resolution 19-9591

EXHIBIT “D”

Regulatory and Economic Resources
DERM Code Enforcement Section
701 NW 1st Court • 6th Floor
Miami, Florida 33136
T 305-372-6902

miamidade.gov

January 4, 2023

Mr. John H. Taylor, Jr., Mayor
City of Opa-locka
780 Fisherman Street
Opa-locka, FL 33054

CERTIFIED MAIL NO. 7021 2720 0000 6928 9180
RETURN RECEIPT REQUESTED

Re: Non-compliance with terms and conditions of the March 3, 2021 Consent Agreement to redress unauthorized municipal license approvals in violation of Chapter 24, Code of Miami-Dade County.

Dear Mr. Taylor, Jr.:

On March 3, 2021, the City of Opa-locka ("City") entered into an administrative consent agreement (agreement) to redress the unauthorized municipal license approvals in violation of Chapter 24, Code of Miami-Dade County (Code). The City's process was administered in a manner that bypassed Miami-Dade County's formal regulatory review processes including reviews for the assessment of Miami-Dade County impact fees and critical DERM reviews to ensure that all affected wastewater collection, transmission and treatment systems have adequate transmission and treatment capacity. This resulted in businesses operating in the City without required DERM annual operating permits, operating without approved Fats, Oils and Grease control devices, and operating while served by public sanitary sewer systems in moratorium.

The Department has determined that the City has failed to comply with paragraphs 9, 13, 14, 15, 18 and 19 of the agreement which amongst other requirements, required the City to complete the following:

- post a link to the DERM Plan Review informational page on the City's website (paragraph 9); and
- submit a Corrective Action Plan ("CAP") and obtain DERM approval of said CAP (paragraph 13); and
- submit a summary report and quarterly reports thereafter (paragraph 15); and
- submit an "In-Kind Project Proposal" to mitigate continuing noncompliance with the Code (paragraph 18); and
- submit the administrative and follow-up costs mandated by the agreement (paragraph 19); and
- obtain approval for all submittals required pursuant to the agreement (paragraph 14).

In addition, it was recently brought to the Department's attention that the City granted a "conditional" extension of time to allow a facility (i.e., Karlinz Auto Group LLC) to continue to operate while going through the DERM review process even though the pump station serving the facility is in moratorium, in violation of section 24-42.3 of the Code. See attached letter from the City of Opa-locka dated December 14, 2022.

Be advised that non-compliance with the referenced agreement constitutes violations of Chapter 24 of the Code of Miami-Dade County ("the Code").

In view of the above and in accordance with the terms of the agreement, DERM is providing you with an opportunity to cure the violations referenced herein.

1. **Upon receipt of this correspondence**, immediately cease and desist from issuing any approval in violation of section 24-42.3 of the Code, specifically granting an extension of time to a business while the business goes through the DERM review process, which effectively allows the facility to operate without the required DERM approval.

2. **Within thirty (30) days upon receipt of this correspondence**, submit a written request for extension of the timetable(s), with supporting documents to DERM, stating the cause(s) of any delay or non-compliance and a plan of action to address how the City will come into compliance with the terms and conditions of the agreement and a proposed timeline for the City to come into compliance with the agreement. Please submit the items requested herein to Environmental Code Enforcement Coordinator Tricia Kong at Tricia.Kong@miamidade.gov.

Be advised that non-compliance with the above directives constitutes violations of Chapter 24, of the Code and may subject the City to the imposition of penalties and or additional enforcement actions as stipulated in the agreement.

If you have any questions or concerns regarding the above, please contact Carlos L. Hernandez, P.E., Interim Senior Division Chief at (305) 372-6920 or by email at Carlos.Hernandez3@miamidade.gov or Tricia Kong of DERM's Code Enforcement Section at (305) 372-6889 or by email at Tricia.Kong@miamidade.gov.

Sincerely,

for Rashid Istambouli, P.E., Interim Director
Division of Environmental Resources Management

Enclosures: Consent Agreement
City of Opa-locka letter dated December 14, 2022 regarding a conditional extension

ec: Airia Austin, City of Opa-locka Public Works Director/Director of Capital Improvement Programs, aaustin@opalockafl.gov
Martha Parfait, MPA, MA, City of Opa-locka Building Permitting & Licensing Manager, mparfait@opalockafl.gov
Cathy Jackson, Director, Miami-Dade County Audit & Management Services, Cathy.Jackson@miamidade.gov
Veretas Fernandes, Audit Supervisor, Miami-Dade County Audit and Management Services Department, Veretas.Fernandes@miamidade.gov
Roberto Lopez, , IT Audit Manager, Miami-Dade County Audit and Management Services Department, Roberto.Lopez@miamidade.gov
Carlos Hernandez, P.E., Galo Pacheco, P.E., Oscar Aguirre, Pablo Asensio, Cristian Guerrero, Der-Ming Kuo & JoAnne Clingerman – RER

MIAMI-DADE COUNTY DEPARTMENT OF REGULATORY AND ECONOMIC RESOURCES, DIVISION OF ENVIRONMENTAL RESOURCES MANAGEMENT	)	
Complainant,	)	**CONSENT AGREEMENT**
vs.	)	
City of Opa-Locka	)	
Respondent.	)	

This Agreement is entered into by and between Miami-Dade County Department of Regulatory and Economic Resources, Division of Environmental Resources Management (hereinafter referred to as "DERM") and the City of Opa-Locka (hereafter referred to as "Respondent") pursuant to Section 24-7(15)(c) of Chapter 24 of the Code of Miami-Dade County, Florida (the Code). This Agreement shall serve to redress unauthorized municipal license approvals issued by the Respondent within the City of Opa Locka located in Miami-Dade County, Florida in violation of Chapter 24 of the Code.

The DERM finds and Respondent acknowledges the following:

FINDINGS OF FACTS

1. Miami-Dade County, Florida, is a political subdivision of the State of Florida. DERM is a division within the County's Department of Regulatory and Economic Resources and is empowered to provide for pollution control and protection of the environment within Miami-Dade County pursuant to Article VIII, Section 6 of the Florida Constitution, the Miami-Dade

County Home Rule Charter and Section 403.182 of the Florida Statutes. DERM has jurisdiction over matters addressed in this Consent Agreement.

2. The Federal Consent Decree between the United States of America, the State of Florida, and Miami-Dade County, dated June 6, 2013, in Case Number 1:12-cv-24400 FAM, in a case styled as United States of America vs. Miami-Dade County (hereafter "the Federal Consent Decree"), requires in part that the County generally, and DERM specifically, establish and amend as appropriate Section 24-42.3 of Chapter 24 of the Code to require DERM's review and issuance of written certification of sanitary sewer system collection, transmission and treatment capacity prior to the approval of all Development Orders, including but not limited to building permits, certificates of occupancy, certificates of completion, certificates of use or municipal occupational licenses.

3. The Respondent is the current owner and operator of a utility wastewater collection and transmission system consisting of: pumping stations, force mains and gravity sewer mains and permitted under Miami-Dade County Domestic Wastewater Operating Permit DWO-47.

4. The Respondent entered into an Administrative Consent Agreement with DERM on February 19, 2019 in order to redress violations of section 24-42.2 as well as sections 24-18 and 24-34 of the Code, relating to non-compliance with permit and utility service fee requirements and violations of the Consent Decree dated September 11, 1995. As a condition of the Agreement, DERM required the Respondent to submit to a summary report documenting all **approved** Building Permit Applications, Certificate of Use, Occupational License, and/or Local Business Tax Receipts. A complete list of Occupational Licenses issued by the Respondent in 2019 was subsequently submitted for DERM review.

5. DERM's review of the Occupational License (hereafter referred to as "OL") report (Exhibit 1) documented that multiple local businesses had been issued municipal operating authorizations in the form of OLs, without first obtaining DERM's written approval as required by Chapter 24 of the Code. The review further revealed that approximately sixty-two (62) OLs had been issued by the Respondent even though said license application was disapproved by DERM. This resulted in businesses operating in the City of Opa Locka, Florida without required DERM annual operating permits, in violation of section 24-18 of Chapter 24 of the Code, operating without approved Fats, Oils and Grease control devices, in violation of section 24-42.6 of Chapter 24 of the Code, and may also be operating while served by public sanitary sewer systems in moratorium, in violation of section 24-42.3 of Chapter 24 of the Code. At a minimum, sixty-eight (68) OLs not routed to DERM for review, appear to require DERM operating permits in addition to DERM approval.

6. On November 4, 2020, DERM issued an enforcement Notice to Respondent which required Respondent to Cease and Desist from issuing municipal operating authorizations without DERM's review and prior written approval.

7. Respondent hereby consents to this Agreement without either admitting or denying the allegations made by DERM in the finding of facts listed above.

8. In an effort to resolve the violations described herein so as to ensure continued protection of the health and safety of the public and the environment of Miami-Dade County and to facilitate compliance with the Code and to avoid time-consuming and costly litigation, the parties hereby agree to the following, and is hereby Ordered pursuant to Section 24-7(15) of the Code :

COMPLIANCE AND REPORTING REQUIREMENTS

9. The Respondent shall within thirty (30) days of DERM providing the Respondent with Plan Review guidance documents, make said information available to the residents and business owners within the City, including but not limited to, posting a link to the DERM Plan Review informational page on the Respondent's website. The guidance documents shall include among other items, DERM contact information and a detailed explanation of the submittal and approval process.

10. The Respondent shall within thirty (30) days of the effective date of this Agreement, submit to DERM a list of all types of Development Orders/Municipal Approvals issued by the Respondent which authorize the establishment of new businesses, re-authorize existing businesses, authorize changes in use, expansions and additions to existing businesses, construction of new buildings, alterations of existing buildings, additions and expansion of existing buildings and/or occupancy of new and existing buildings. This list shall include any of the following or their municipal equivalent, where otherwise required pursuant to its municipal laws: a Certificate of Use (CU), Temporary CU, Occupational License (OL), Temporary OL, Local Business Tax (LBT), Temporary LBT, Certificate of Completion (COC), Temporary COC, Certificate of Occupancy (CO), Temporary CO and/or Building or Building Subsidiary Permits. The list shall also include pertinent information such as an explanation of categories available for each type of permit and/or authorization issued.

11. Respondent shall, within ninety (90) days from the date of this Agreement, issue written notification to each business identified as either a disapproved license application or requiring a DERM operating permit in Exhibit 1 (Note: these are color coded red and yellow respectively).

The notification shall require each business owner to prepare and submit to the Respondent, within ninety (90) days after receipt of notification, a certificate of use application or municipal equivalent and/or building permit application, as applicable. The notification shall advise that failure to submit said applications(s) within the time period provided will be grounds for the Respondent to initiate enforcement action to obtain compliance. The notification shall also advise that the Respondent will direct all applications to Miami-Dade County for review and approval, at which time additional regulatory obligations may be required, including but not limited to the assessment of any applicable impact fees and the requirement to obtain DERM operating permits. Each written notification to the business owners shall be delivered by Certified Mail and shall copy each corresponding property owner and "DERM, c/o Eva Lizardo, 701 NW 1st Court, 6th Floor, Miami, Florida, 33136-3912."

12. The Respondent shall no later than August 1, 2021, issue written notification to each business identified in Exhibit 1 as having a license without a DERM review. These businesses are listed in Exhibit 1 without any coloration. Of this group, DERM does not need to review and/or approve OLs for the following categories: Peddler, Vending, Insurance (not physically located in the City), and home offices. The notification for all businesses excluding Peddler, Vending, Insurance (not physically located in the City), and home offices, shall require each business owner to prepare and submit to the Respondent, prior to renewing their Municipal Occupational License, a certificate of use application or municipal equivalent and/or building permit application, as applicable. The notification shall advise that failure to submit said applications(s) within the time period provided will be grounds for the Respondent to initiate enforcement action to obtain compliance and said license will not be renewed. The notification shall also advise that the Respondent will direct all applications to Miami-Dade County for

review and approval, at which time additional regulatory obligations may be required, including but not limited to the assessment of any applicable impact fees and the requirement to obtain DERM operating permits. Based on the review of information provided pursuant to Paragraph ten (10), DERM may further reduce the number of businesses requiring notification.

13. Respondent shall within one-hundred eighty (180) days of the effective date of this Agreement, submit a Corrective Action Plan(CAP) to DERM for review and approval, for the modification of Respondent's existing intake systems or processes, and/or the implementation of new intake systems or processes, for all applications listed in Paragraph ten (10) herein that are submitted to the Respondent for review and comment. The scope of DERM's review and approval of the CAP shall be based upon whether the CAP meets the minimum requirements identified below as (a) through (e) and the timeframes herein. DERM shall not dictate the manner in which these minimum objectives are implemented by Respondent. The modified or new systems, as applicable, shall be available for pre-deployment testing within twenty-four (24) months from DERM CAP approval and be fully deployed and functional within thirty-six (36) months from the effective date of this Agreement. Said CAP shall propose the implementation of measures which will ensure that:

    (a) Respondent's staff, its delegates and/or authorized agents, will correctly and consistently identify all submittals and applications which require DERM review and approval prior to Respondent's temporary and final approvals;
    (b) Respondent's staff, its delegates and/or authorized agents, will not issue or grant any approvals of submittals and applications subject to the code sections of Chapter 24 as referenced in this Agreement without the Respondent's confirmation of DERM's prior written approval of the application;
    (c) Each and every approval, temporary and final, issued or granted by Respondent's staff, its delegates and/or authorized agents, is memorialized in a form that captures

the date and time of Respondent's approval, the name of Respondent's staff approving the application, the type of application being approved, the form of DERM's approval, and an image or copy of DERM's approval;

(d) All required information stored and available for DERM review for a period of no less than five (5) years;

(e) DERM has remote access to review and download data compiled from the processes implemented herein.

14. The submittals required pursuant to this Agreement are subject to review and approval, approval with conditions, or disapproval by DERM. Implementation of the approved submittals shall be completed within the timeframes provided in the DERM approval. Nothing herein shall prevent Respondent from requesting, and from DERM approving, extensions of time for good cause. If DERM disapproves any submittals, an itemized explanation will be included in the disapproval letter. The Respondent shall fully address all items detailed in the disapproval letter within the timeframes provided in said letter.

15. The Respondent shall by February 28,2021 submit to DERM a summary report documenting all new **approved** Building Permit Applications, Certificate of Use, Occupational License, and/or Local Business Tax Receipts issued in 2020. Said report shall continue to be submitted each quarter thereafter, providing information from the previous quarter, for the duration of this Consent Agreement. The frequency of submittals may be modified based on DERM review of the summary report. All reports shall be submitted to DERM, 701 NW 1st Court, 6th Floor, Miami, Florida, 33136, Attention: Eva Lizardo, Code Enforcement Officer.

16. This Agreement constitutes a lawful order of the Director of the DERM and violation of any requirement may subject Respondent to further enforcement including court action.

SETTLEMENT COSTS

17. The Respondent hereby certifies that Respondent has the financial ability to initiate compliance and shall endeavor to comply with the terms or conditions set forth herein and to comply with any payment requirements specified in this Agreement.

18. Due to the continuing violations specified in paragraph five (5) herein, the Respondent has agreed to mitigate this non-compliance through implementation of DERM-approved in-kind project(s), equaling or exceeding $37,500, which will result in improvements that directly benefit City of Opa Locka citizens and businesses and support the protection of public health. The Respondent shall, within thirty (30) days of the effective date of this Agreement, submit to DERM for review and approval a detailed "In-Kind Project Proposal." Any in-kind project(s) shall not be a project already required pursuant to Chapter 24 of the Code or the Federal Consent Decree.

19. Respondent shall, upon signing this Agreement, submit a certified check **made payable to Miami-Dade County (indicate file no. DWO-47 on check)** in the amount of $1,697 to cover administrative and follow-up costs in this matter. Payment shall be sent to Miami-Dade County. Environmental Resources Management, Department of Regulatory and Economic Resources, 701 NW 1st Court, Cashier's Office, 3rd Floor, Miami, Florida 33136-3912, c/o Eva Lizardo, Code Enforcement Officer.

20. In the event Respondent fails to comply with any of the requirements of paragraphs 9, 10, 11, 12, 13, 14, and 15 of this Consent Agreement, the Respondent shall pay DERM a civil penalty of $100.00 per day for each day of non-compliance, and the Respondent shall be subject to enforcement action in a court of competent jurisdiction for such failure pursuant to the

provisions set forth in Chapter 24 Miami-Dade County Code. Payment of said penalty may be fully mitigated upon timely compliance by Respondent. Within sixty (60) days of written notice from DERM, Respondent shall make payment of the appropriate penalties to Miami-Dade County by check or money order. Payment shall be sent to DERM, 701 NW 1st Court, Cashier's Office, 3rd Floor, Miami, Florida 33136, c/o Eva Lizardo, Code Enforcement Officer.

GENERAL PROVISIONS

21. The terms and conditions set forth in this Consent Agreement may be enforced in any court of competent jurisdiction pursuant to Chapter 24, of the Code of Miami-Dade County, the Florida Administrative Code, or the Florida Statutes.

22. Entry into this Consent Agreement does not relieve Respondent of the responsibility to comply with applicable federal, state, or local laws, regulations and ordinances.

23. Reports submitted by Respondent pursuant to paragraphs 10 and 15 of this Agreement shall be reviewed for completeness and accuracy and signed by an authorized City of Opa Locka senior management official with the following attestation:

    "*I certify under penalty of law that this document and all attachments were prepared under my direction or supervision in accordance with a system designed to assure that qualified personnel properly gather and evaluate the information submitted. Based on my inquiry of the person or persons who manage the system, or those persons directly responsible for gathering such information, the information submitted is, to the best of my knowledge and belief, true, accurate and complete. I am aware that there are significant penalties for submitting false information, including the possibility of fine and imprisonment for knowing violations.*"

24. Where timetables cannot be met, due to circumstances beyond Respondent's control, Respondent shall submit a written request for extension of the timetable(s), with supporting documents to DERM, stating the cause(s) of any delay or non-compliance and the extension of time requested. A determination of the reasonableness of the delay or non-compliance shall be made by DERM for the purposes of continuation of enforcement actions and the imposition of penalties pursuant to paragraph 20 of this Agreement.

25. This Agreement shall neither be evidence of a prior violation of the Code nor shall it be deemed to impose any limitation upon any investigation or action by DERM in the enforcement of Chapter 24 of the Code of Miami-Dade County, the Florida Administrative Code or the Florida Statutes.

26. In consideration of the complete and timely performance by the Respondent of the terms and conditions set forth in this Agreement, DERM waives its rights to seek judicial imposition of damages or criminal or civil penalties for the matters alleged in this Agreement.

27. This Consent Agreement shall become effective upon the date of execution by the Director of DERM.

Signatures on the following page

02/26/2021
Date

John E. Pate, City Manager
City of Opa-Locka

State of Florida
County of Miami-Dade
The foregoing instrument was acknowledged before me by means of (*how the individual appeared check one*):
☑ physical presence ☐ online notarization this 26th (*date*) day of February (*month*), 20 21 (*year*).

by John E. Pate
(*name of individual*)

Individual identified by: ☑ personal knowledge ☐ satisfactory evidence _____.
(*type*)

Notary Public State of Florida
Joanna Flores
My Commission GG 292935
Expires 01/21/2023

(*Affix Florida Notary Seal above*)

Joanna Flores
(Signature of Notary Public)

Joanna Flores
(typed, printed, or stamped name of Notary Public)

DO NOT WRITE BELOW THIS LINE – GOVERNMENT USE ONLY

3-3-2021
Date

Lee N. Hefty, Director
Division of Environmental Resources Management
Department of Regulatory and Economic Resources

Witness

Witness

Sponsored by: City Manager

RESOLUTION NO. 21-9837

A RESOLUTION OF THE CITY COMMISSION OF THE CITY OF OPA-LOCKA, FLORIDA, AUTHORIZING THE CITY MANAGER TO EXECUTE A CONSENT AGREEMENT WITH THE MIAMI-DADE COUNTY DEPARTMENT OF REGULATORY AND ECONOMIC RESOURCES, DIVISION OF ENVIRONMENTAL RESOURCES MANAGEMENT (DERM), SUBSTANTIALLY IN THE FORM ATTACHED HERETO AS EXHIBIT "A" AND RESOLVE ALLEGED BUILDING DEPARTMENT VIOLATIONS; PROVIDING FOR INCORPORATION OF RECITALS; PROVIDING FOR AN EFFECTIVE DATE

WHEREAS, the Miami-Dade County Department of Regulatory and Economic Resources, Division of Environmental Resources Management (DERM), alleges that the City of Opa-Locka ("City") has failed to comply with Chapter 24 of the Miami-Dade County Code of Ordinances; and

WHEREAS, a Consent Agreement with DERM would resolve all alleged and pending violations; and

WHEREAS, the City Commission of the City of Opa-Locka hereby authorizes the City Manager to negotiate a Consent Agreement with DERM pursuant to Resolution 19-9591; and

NOW THEREFORE, BE IT RESOLVED BY THE CITY COMMISSION OF THE CITY OF OPA LOCKA, FLORIDA:

Section 1. RECITALS ADOPTED.
The recitals to the preamble herein are incorporated by reference.

Section 2. AUTHORIZATION
The City Commission of the City of Opa-Locka hereby authorizes the City Manager to execute a Consent Agreement, substantially in the form attached as Exhibit "A", with Miami-Dade County Department of Regulatory and Economic Resources, Division of Environmental Resources Management (DERM) and resolve alleged violations of the Miami-Dade County Code of Ordinances.

SECTION 3. SCRIVENER'S ERRORS.

Sections of this Resolution may be renumbered or re-lettered and corrections of typographical errors which do not affect the intent may be authorized by the City Manager, or the City Manager's designee, without need of public hearing, by filing a corrected copy of same with the City Clerk.

Section 4. EFFECTIVE DATE.

This Resolution shall take effect immediately upon adoption and is subject to the approval of the Governor or his designee.

PASSED AND ADOPTED this 27th day of January, 2021.

Mayor Matthew A. Pigatt

Attest to:

Joanna Flores
City Clerk

Approved as to form and legal sufficiency:

Burnadette Norris-Weeks, P.A.
City Attorney

MOVED BY: Commissioner Burke

SECONDED BY: Commissioner Davis

Vote:	**5-0**
Commissioner Burke	YES
Commissioner Davis	YES
Commissioner Taylor	YES
Vice-Mayor Williams	YES
Mayor Pigatt	YES

City of Opa-locka
Agenda Cover Memo

Department Director:	Airia Austin			**Department Director Signature:**			
City Manager:	John E. Pate			**CM Signature:**			
Commission Meeting Date:	*01-27-2021*		**Item Type:** *(Enter X in box)*	**Resolution**	**Ordinance**		**Other**
				X			
Fiscal Impact: *(Enter X in box)*	**Yes**	**No**	**Ordinance Reading:** *(Enter X in box)*		**1st Reading**		**2nd Reading**
	x $0.00		**Public Hearing:** *(Enter X in box)*		**Yes**	**No**	**Yes** / **No**
						X	X
Funding Source: *Account#:*	*(Enter Fund & Dept)* Ex:		**Advertising Requirement:** *(Enter X in box)*		**Yes**		**No**
							X
Contract/P.O. Required: *(Enter X in box)*	**Yes**	**No**	**RFP/RFQ/Bid#:**				
	X						
Strategic Plan Related *(Enter X in box)*	**Yes**	**No**	**Strategic Plan Priority Area:**		**Strategic Plan Obj./Strategy:** *(list the specific objective/strategy this item will address)*		
	X		**Enhance Organizational** ☐ **Bus. & Economic Dev** ☐ **Public Safety** ■ **Quality of Education** ☐ **Qual. of Life & City Image** ■ **Communication** ☐				
Sponsor Name	City Manager		**Department:**		City Manager		

Short Title:

Acceptance of a DERM Consent Agreement

Staff Summary:

A Resolution of the City Commission of the City of Opa-locka, Florida, authorizing the City Manager to execute a consent agreement pertinent to the Building Depart compliance with the Miami-Dade Department of Reglatory and Economic Resources Division of Environmental Resourses Management DERM.

Financial Impact (FY 20 Budget)

Account	Description	Available	Project	Remaining Balance

Proposed Action:

Staff recommends approval of this resolution.

Attachment:

1. Agenda
2. DERM Consent Agreement
3. Resolution 19-9591

CITY OF
OPA LOCKA
FLORIDA

December 14, 2022

Clive Christian

1552 NE 181 St.

North Miami Beach, FL 33162

Subject: Karlinz Auto Group, LLC 14663 NW 27 Ave

Dear Mr. Christian:

This letter informs you that your request to continue operating your business while awaiting approval from the County (DERM) has been conditionally granted for a period of 30 days by Interim City Manager Darvin Williams.

Please visit our Building Permitting & Licensing Department to complete the new business process. As the business was operating without a license since 2021, fees from 2021-2023 will be collected. Additionally, inspections by our city inspectors will be scheduled at that time.

The total amount due is: **$1684.50**

Thank you for your cooperation in this matter. Please do not hesitate to contact me with any further questions or concerns.

Sincerely,

Martha Parfait, MPA, MA

Building Permitting & Licensing Manager

CC: City Manager; Public Works; Code Enforcement

EXHIBIT “E”

MEMORANDUM

Agenda Item No. 8(O)(2)

TO:	Honorable Chairman Esteban L. Bovo, Jr. and Members, Board of County Commissioners	**DATE:**	July 18, 2017
FROM:	Abigail Price-Williams County Attorney	**SUBJECT:**	Resolution approving execution of an Agreement between Miami-Dade County and the City of Opa-Locka for the billing of Water, Sanitary Sewage and Stormwater Utility Services charges for an intial ten year period with two, five year options to renew contingent upon ratification by City of Opa-Locka; and authorizing the County Mayor to execute same and to exercise the provisions contained therein

The accompanying resolution was prepared by the Water and Sewer Department and placed on the agenda at the request of Prime Sponsor Commissioner Barbara J. Jordan.

Abigail Price-Williams
County Attorney

APW/lmp

Memorandum

MIAMI-DADE COUNTY

Date: July 18, 2017

To: Honorable Chairman Esteban L. Bovo, Jr.
and Members, Board of County Commissioners

From: Carlos A. Gimenez
Mayor

Subject: Resolution Approving Execution of an Agreement between Miami-Dade County and the City of Opa-Locka for the Provision of Billing and Collection Services

---

Recommendation

It is recommended that the Board of County Commissioners (Board) approve and adopt the attached resolution authorizing the execution of an agreement titled "Agreement for the Billing of Water, Sanitary Sewage and Stormwater Utility Service Charges between Miami-Dade County and the City of Opa-Locka" (Billing Agreement). Under the terms of this Billing Agreement, the County, through its Water and Sewer Department, will administer the City's meter readings and the billing and collection of water, sanitary sewage, and stormwater charges for the City's residents and customers. The Billing Agreement has a contract term of ten years with two five-year options to renew.

Scope

This Billing Agreement provides services for the City of Opa-Locka located in Districts 1, 2 and 13 represented by Commissioners Barbara J. Jordan and Jean Monestime, and Chairman Esteban L. Bovo Jr., respectively.

Fiscal Impact/Funding Source

Overall, this Billing Agreement will have a positive fiscal impact on the County and the City of Opa-Locka, as it provides the City with the financial means to compensate the County for the billing and collection services the County will render in accordance with the terms and conditions of this Billing Agreement, and pay the County for past debt. The different compensation methods are noted below.

First, before the County remits payment to the City of Opa-Locka for any amounts collected from water, sanitary sewer, and stormwater charges due to the City, the County will deduct its compensation for services rendered as follows: 1) $1.49 per bill for all accounts that are charged the City's water charge; 2) $1.49 per bill for all accounts that are charged the City's sanitary sewer charge; and 3) $0.31 cents per bill for all accounts that are charged the City's stormwater utility charge.

Second, as of March 15, 2017, the City of Opa-Locka recognizes that it owes the County $6,980,375 in delinquent charges for services provided by a number of County departments. Of that amount, $3,586,032 is owed to WASD (see Exhibit A). The City will pay the County 60 monthly payments of $125,428.20 in order to re-pay the County. The monthly payment, which includes a three percent annual interest rate charge, will be deducted from the amounts collected for water, sewer, and stormwater service by the County on behalf of the City. If the County discovers any additional charges or fees owed by the City to the County for the time period prior to March 15, 2017, the County may amend the Billing Agreement through mutual agreement of the Parties in order to collect such additional amounts through the monthly payment arrangement.

Third, there will be a short-term fiscal impact to the County, as the County will front all costs (using WASD operating revenues) to install, replace, and repair the City of Opa-Locka's metering system at a cost of approximately $1.5 million to $2.2 million. These costs will be deducted in 60 monthly payments

from the amounts collected by the County on behalf of the City, and will also include a three percent annual interest rate charge.

Fourth, and of paramount importance, allowing WASD to assume the billing and collection responsibilities for the City of Opa-Locka will increase the revenues to the City's water and sewer utility, as WASD has a proven track record in the area of collections, with a 99 percent collection rate, as opposed to the City's low historical collection rate.

Track Record/Monitor
WASD's Chief Financial Officer Frances Morris will oversee the implementation of this Billing Agreement.

Background
On January 16, 1996, the City of Opa-Locka and the County entered into a contract providing for the rendition of wholesale sewage disposal services (Wholesale Sewage Contract) to the City by the County. Since then, three addendums have been approved by the Board, extending the term of the contract, adding points of connection, and updating its terms and conditions. The Wholesale Sewage Contract expired in January 2011, and the County has continued to provide wholesale sewage disposal services in accordance with the terms of the Contract. Approval of a new Wholesale Sewage Contract, which is a partner agenda item to this Billing Agreement, is a condition to both parties entering into this Billing Agreement.

On May 4, 2007, the City of Opa-Locka and the County entered into a contract providing for the rendition of wholesale water services (Wholesale Water Contract) to the City by the County for a 20-year term. The Wholesale Water Contract expires in 2027.

In June 2016, the City of Opa-Locka met the legal criteria necessary for state intervention, and an executive order was signed by Governor Rick Scott, declaring the City to be in a "financial emergency," and appointing an Oversight Board to oversee the City's operations.

Since the City of Opa-Locka is a WASD water and sewer wholesale customer, when the City's financial condition deteriorated in 2016 and it became difficult for the City to meet basic costs, such as payroll, employee medical coverage, fuel suppliers, and electrical bills, WASD staff immediately contacted and met with City officials to act in an "advisory capacity." Discussions began between City officials and Department personnel regarding the condition of the City's water and sewer system, and the City's outstanding legal obligations to the County, which total approximately $6.9 million dollars, primarily for water and sewer services. The Department worked together with City officials, at the request of the City, to provide the City with the means to improve the City's billing and collection practices, and to pay all past debt to the County, both of which are being addressed through this Billing Agreement.

After this Billing Agreement goes into effect and an initial meter reading is taken for each customer account in the City of Opa-Locka, the County will continue to read the meters on a monthly basis and will handle the billings and collections on behalf of the City. The County is not responsible for the repair or reconstruction of the City's water and sewer system, nor is the County responsible for complying with any federal, state, or local laws related to the City's water and sewer system. Also, the City will indemnify or hold harmless the County for any disputes between the City and its water and sewer customers.

The City of Opa-Locka's City Commission approved a draft of the Billing Agreement on May 18, 2017, via Resolution No. 17-9365, and although the City Commission discussed repayment of debts owed to the County during its consideration of the Billing Agreement, the draft Billing Agreement before the City was not formally amended to reflect the repayment language that is contained in the attached 3

agreement executed by the City's administration. Therefore, any approval of this agreement by the Board is conditioned upon the City Commission's ratification of its administration's execution of the attached agreement. On June 23, 2017, the State's Oversight Board approved the Billing Agreement in substantially the form attached to this item.

Jack Osterholt
Deputy Mayor

Exhibit A

Miami-Dade County
Accounts Receivable - City of Opa-locka
As of March 15, 2017

Department	Type of receivable	Total	
Information Technology (ITD)	Radio and field service	$ 12,146	
Internal Services Department	Annual rent payment	1	
Internal Services Department	Accidental Death Insurance	1,343	
Parks Recreation and Open Spaces (PROS)	Equipment rental	1,400	
Police / ITD	Capital project- 800 MHZ radios	186,291	
Regulatory and Economic Resources (DERM)	Division of Environmental Resource Management Potable Water Utility and Domestic Waste Water Utility Operating Permit Fee for calendar year 2015	779,410	
Regulatory and Economic Resources (DERM)	Maintenance of shared drainage systems under inter-local agreement for services provided in fiscal year 13/14	230,431	
Regulatory and Economic Resources (DERM)	Maintenance of shared drainage systems under inter-local agreement for services provided in fiscal year 14/15; billed 12/18/15	218,490	
Regulatory and Economic Resources (CPBC)	Unsafe Structure Proceedings fiscal year 13/14	7,787	
Regulatory and Economic Resources (CPBC)	Building Permitting Surcharge fiscal year 14/15	1,593	
Solid Waste Management	Disposal charges at County facilities	48,384	*
Solid Waste Management	Curbside recycling services	113,901	*
Solid Waste Management	Interlocal Agreement for Disposal, breach of contract for FY 13/14	167,196	*
Solid Waste Management	Interlocal Agreement for Disposal, breach of contract for FY 14/15	225,970	*
Water and Sewer (WASD)	Lab. Test - Water Quality	6,405	*
Water and Sewer (WASD)	Wholesale water sale and wastewater treatment	3,579,627	*
Total		$ 5,580,375	

K

MDC Audit and Management Services - Audit Assessment **

Department	Type of receivable	Total
Office of the CITT	Amount to be recaptured because the City did not furnish any documentation to support use of Surtax Distribution for the three years ended 9/30/10	$ 1,400,000

Total Receivables and Audit Assessments $ 6,980,375

* as of February 28, 2017

** Opa-Locka could submit a claim for qualifying expenditures incurred in fiscal years 2008-2010 to reduce the recapture total.

Repayment over sixty (60) monthly payments, to include three percent (3%) annual interest	$ 125,428.20

EXHIBIT “F”

LOCATIONS & ENTITIES V9.0
DATE: 01/19/2023
TIME: 11:33:25

CITY OF OPA-LOCKA
BUSINESS ESTABLISHMENT INFORMATION

PAGE NUMBER: 1
MODULE : rep_estab

SELECTION CRITERIA: cblbusiness.bus_stat='O' AND establish BETWEEN '01/01/2020' AND '12/31/2020'

MAILING: 2049 NW 141 ST OPA LOCKA FL 33054
BUSINESS: OBED BERNARD O & L PRESTIGE AUTO SALES LLC 2049 NW 141 ST 33054
PHONE: (954) 200-9622 BUSINESS STATUS: Open DATE ESTABLISHED: 01/06/20 DATE CLOSED:
LICENSE(S) AUTO REPAIR SHOP AUTO BODY
CERTIFICATE OF USE NON RESIDENTIAL

MUA 19007530 ok (12-5-2019)

MAILING: 2039 NW 141 ST OPA FL 33054
BUSINESS: JAYCEE ROLLASON AUTO SOLUTION OF SOUTH FLORIDA INC 2039 NW 141 ST 33054
PHONE: (305) 747-3733 BUSINESS STATUS: Open DATE ESTABLISHED: 01/31/20 DATE CLOSED:
LICENSE(S) AUTO REPAIR SHOP AUTO BODY
CERTIFICATE OF USE NON RESIDENTIAL

MUA 20000442 ok (1-23-2020)

MAILING: 14011 NW 20TH AVE OPA LOCKA FL 33054
BUSINESS: BARAK YAARI GREEN ERTH ENVIRONMENTAL INC 14011 NW 20 AVE 33054
PHONE: BUSINESS STATUS: Open DATE ESTABLISHED: 01/31/20 DATE CLOSED:
LICENSE(S) STORAGE PER SQ FT
CERTIFICATE OF USE NON RESIDENTIAL

MUA 20000348 ok (1-17-2020)

MAILING: 151 OPA LOCKA BLVD OPA LOCKA FL 33054
BUSINESS: ALFREDO ONTIVERO ONTIVERO'S JEWELRY,INC 151 OPA LOCKA BLVD 33054
PHONE: BUSINESS STATUS: Open DATE ESTABLISHED: 01/31/20 DATE CLOSED:
LICENSE(S) BASIC SCHEDULE - RETAIL & WHOLESALE NOT OTHERWISE DEFINED IN FEE SCHEDULE
CERTIFICATE OF USE NON RESIDENTIAL
MERCHANTS
MERCHANTS

MUA 22000507 ok (10-18-2021)

MAILING: 13100 NW 38 AVENUE OPA-LOCKA FL 33054
BUSINESS: JULIO CORTEZ EL REGALO UNIVERSAL , LLC 3800 NW 132 ST 33054
PHONE: (305) 953-8899 BUSINESS STATUS: Open DATE ESTABLISHED: 02/07/20 DATE CLOSED:
LICENSE(S) AUTO REPAIR SHOP AUTO BODY
CERTIFICATE OF USE NON RESIDENTIAL
STORAGE PER SQ FT

MUA 19004768 Pending (Fees)

MAILING: 2111 NW 139 ST BAY 12 OPA LOCKA FL 33054
BUSINESS: LEONEL ARRIDELL LEONEL PROFESSIONAL SERVICES LLC 2111 NW 139 ST BAY 12 33054
PHONE: (786) 380-6660 BUSINESS STATUS: Open DATE ESTABLISHED: 02/07/20 DATE CLOSED:
LICENSE(S) MANUFACTURE
CERTIFICATE OF USE NON RESIDENTIAL

MUA 20000406 ok (1-22-2020)

MAILING: 14929 NW 22 AVENUE OPA-LOCKA FL 33054
BUSINESS: BAYNETTE BURKE OPULENCE NAIL STUDIO, LLC 14929 NW 22 AVE 33054
PHONE: (786) 486-9507 BUSINESS STATUS: Open DATE ESTABLISHED: 02/07/20 DATE CLOSED:
LICENSE(S) BEAUTY PARLORS AND BARBER SHOPS
CERTIFICATE OF USE NON RESIDENTIAL
BEAUTY PARLORS AND BARBER SHOPS

N/A
No Application

MAILING: 4692 NW 133 STREET OPA LOCKA FL 33054
BUSINESS: ROCHELLE NEWBOLD JULY 10TH 1973 LLC 4660 NW 133 ST 33054
PHONE: (305) 300-1019 BUSINESS STATUS: Open DATE ESTABLISHED: 02/13/20 DATE CLOSED:
LICENSE(S) STORAGE PER SQ FT

No Application

SELECTION CRITERIA: cblbusiness.bus_stat='O' AND establish BETWEEN '01/01/2020' AND '12/31/2020'

CERTIFICATE OF USE NON RESIDENTIAL

MAILING: 13147 NW 42 AVE OPA-LOCKA FL 33054
BUSINESS: HUNG ANH DUONG D & A STUDIO INC. 13147 NW 42 AVE 33054
PHONE: (786) 344-5253 BUSINESS STATUS: Open DATE ESTABLISHED: 02/19/20 DATE CLOSED:
LICENSE(S) STORAGE PER SQ FT
CERTIFICATE OF USE NON RESIDENTIAL

Different name
MUA 20020590 under Starlight Investments, Inc.

MAILING: 13905 NW 19 AVE OPA LOCKA FL 33054
BUSINESS: MICHEL FISHER MTE TRANS CORP 13905 NW 19 AVE 33054
PHONE: (305) 890-7073 BUSINESS STATUS: Open DATE ESTABLISHED: 02/20/20 DATE CLOSED:
LICENSE(S) AUTO REPAIR SHOP AUTO BODY
CERTIFICATE OF USE NON RESIDENTIAL

MUA20000653 OK (2-10-2020)

MAILING: 12978 NW 42 AVE UNIT #110 OPA-LOCKA FL 33054
BUSINESS: MANUEL BLANCO ARIES BLINDS 12978 NW 42 AVE UNIT 111 33054
PHONE: (786) 366-7404 BUSINESS STATUS: Open DATE ESTABLISHED: 03/09/20 DATE CLOSED:
LICENSE(S) MERCHANT-RETAIL OR WHOLESALE
CERTIFICATE OF USE NON RESIDENTIAL

Different year
MUA23001169 (11-15-2022)

MAILING: 4648 NW 133 ST BAY A OPA-LOCKA FL 33054
BUSINESS: NAASHON DUCILLE STAKZ GOODS DISTRIBUTION 1951 NW 141 ST UNIT 17 33054
PHONE: (954) 665-5095 BUSINESS STATUS: Open DATE ESTABLISHED: 03/12/20 DATE CLOSED:
LICENSE(S) STORAGE PER SQ FT
CERTIFICATE OF USE NON RESIDENTIAL

NO Application

MAILING: 13408 NW 38 CT OPA-LOCKA FL 33054
BUSINESS: LUKAS CORREA FIGHTING EVOLUTION WRESTLING 13408 NW 38 CT 33054
PHONE: (954) 918-7303 BUSINESS STATUS: Open DATE ESTABLISHED: 03/17/20 DATE CLOSED:
LICENSE(S) PRIVATE, FOR PROFIT
CERTIFICATE OF USE NON RESIDENTIAL

NO Application
MUA22093708 - ~~Pending~~ Expired - 6-27-22

MAILING: 13414 NW 38 COURT OPA LOCKA FL 33054
BUSINESS: ANTONIO ALVAREZ SHIFT VENTURES LLC 13414 NW 38 COURT 33054
PHONE: (305) 308-9696 BUSINESS STATUS: Open DATE ESTABLISHED: 03/18/20 DATE CLOSED:
LICENSE(S) STORAGE PER SQ FT
CERTIFICATE OF USE NON RESIDENTIAL

NO Application under this address.

MAILING: 4163 NW 135 ST OPA-LOCKA FL 33054
BUSINESS: YAMISEL LAUCIRICA WAY LOW INSURANCE LLC/UNIVISTA INS 4149 NW 135 ST 33054
PHONE: (786) 648-4987 BUSINESS STATUS: Open DATE ESTABLISHED: 03/18/20 DATE CLOSED:
LICENSE(S) INSURANCE COMPANY - EACH OFFICE
CERTIFICATE OF USE NON RESIDENTIAL

NO Application
Expired Process / MUA22000983 11/1/21

MAILING: 14540 NW 26 AVE OPA LOCKA FL 33054
BUSINESS: CLAUDIA LARROSA OPA LOCKA REBUILT INC 14540 NW 26 AVE 33054
PHONE: BUSINESS STATUS: Open DATE ESTABLISHED: 03/19/20 DATE CLOSED:
LICENSE(S) UNCLASSIFIED NOT OTHERWISE SET OUT PER ORDINANCE

NO application

Pending MUA 23000294 12-7-22

CITY OF OPA-LOCKA
BUSINESS ESTABLISHMENT INFORMATION

SELECTION CRITERIA: cblbusiness.bus_stat='O' AND establish BETWEEN '01/01/2020' AND '12/31/2020'

MAILING: 14540 NW 26 AVE OPA LOCKA FL 33054
BUSINESS: CLAUDIA LARROSA OPA LOCKA REBUIT INC 14540 NW 26 AVE 33054
PHONE: BUSINESS STATUS: Open DATE ESTABLISHED: 03/19/20 DATE CLOSED:
LICENSE(S) UNCLASSIFIED NOT OTHERWISE SET OUT PER ORDINANCE
CERTIFICATE OF USE NON RESIDENTIAL
No application

MAILING: 4165 NW 132 ST UNIT 19-20 OPA LOCKA FL 33054
BUSINESS: NELSON DIAZ OWNER ALE LI HONEY CORP 4165 NW 132 ST UNIT 19-20 33054
PHONE: (786) 368-2280 BUSINESS STATUS: Open DATE ESTABLISHED: 03/19/20 DATE CLOSED:
LICENSE(S) BASIC SCHEDULE - RETAIL & WHOLESALE NOT OTHERWISE DEFINED IN FEE SCHEDULE
CERTIFICATE OF USE NON RESIDENTIAL
Expired Process MUA22000348 10-13-21

MAILING: 4165 NW 132 ST UNIT 19-20 OPA LOCKA FL 33054
BUSINESS: NELSON DIAZ OWNER ALE LI HONEY CORP 4060 NW 132 ST BAY 12 33054
PHONE: (786) 368-2280 BUSINESS STATUS: Open DATE ESTABLISHED: 03/19/20 DATE CLOSED:
LICENSE(S) BASIC SCHEDULE - RETAIL & WHOLESALE NOT OTHERWISE DEFINED IN FEE SCHEDULE
CERTIFICATE OF USE NON RESIDENTIAL
No application

MAILING: 381 W 15 ST HIALEAH FL 33010
BUSINESS: RAMON RODRIGUEZ PEDDLER RAMON RODRIGUEZ PEDDLER 381 W 15 ST 33010
PHONE: (786) 343-7774 BUSINESS STATUS: Open DATE ESTABLISHED: 03/20/20 DATE CLOSED:
LICENSE(S) PEDDLER
No application

MAILING: 14775 NW 22 CT OPA-LOCKA FL 33054
BUSINESS: CHANOINE FERTIL RUN & DRIVE AUTO SALES, INC. 14775 NW 22 CT 33054
PHONE: (786) 261-4370 BUSINESS STATUS: Open DATE ESTABLISHED: 03/20/20 DATE CLOSED:
LICENSE(S) AUTO BROKER / VEHICLE SALES
CERTIFICATE OF USE NON RESIDENTIAL
No application

MAILING: 14920 NW 22 AVE OPA-LOCKA FL 33054
BUSINESS: IMER A. DE JESUS CRUZ I & D AUTO EXPORT INC. 14920 NW 22 AVE 33054
PHONE: (305) 690-2956 BUSINESS STATUS: Open DATE ESTABLISHED: 03/23/20 DATE CLOSED:
LICENSE(S) AUTO REPAIR SHOP AUTO BODY
CERTIFICATE OF USE NON RESIDENTIAL
No application

MAILING: 14020 NW 20 AVE OPA-LOCKA FL 33054
BUSINESS: SERGIO CASTILLO SERGIO TRUCK REPAIR LLC 14020 NW 20 AVE 33054
PHONE: (786) 715-9732 BUSINESS STATUS: Open DATE ESTABLISHED: 03/24/20 DATE CLOSED:
LICENSE(S) AUTO REPAIR SHOP AUTO BODY
CERTIFICATE OF USE NON RESIDENTIAL
MUA20001037 ok (2-25-2020)

MAILING: 2079 OPA-LOCKA BLVD OPA-LOCKA FL 33054
BUSINESS: GARY D. MALIK HIGHLY AMBITIOUS LLC 2079 OPA-LOCKA BLVD 33054
PHONE: (786) 259-2364 BUSINESS STATUS: Open DATE ESTABLISHED: 03/24/20 DATE CLOSED:
LICENSE(S) MERCHANT-RETAIL OR WHOLESALE
CERTIFICATE OF USE NON RESIDENTIAL
No application

MAILING: 12780 CAIRO LANE OPA LOCKA FL 33054

CITY OF OPA-LOCKA
BUSINESS ESTABLISHMENT INFORMATION

SELECTION CRITERIA: cblbusiness.bus_stat='O' AND establish BETWEEN '01/01/2020' AND '12/31/2020'

BUSINESS: ZHALID M. ZLEKHAH MEGA USED AUTO PARTS, LLC 12780 CAIRO LN 33054
PHONE: (305) 681-6848 BUSINESS STATUS: Open DATE ESTABLISHED: 04/29/20 DATE CLOSED:
LICENSE(S) JUNK YARD/JUNK DEALERS,
CERTIFICATE OF USE NON RESIDENTIAL

MUA21007318 OK (9-20-2021)

MAILING: 1986 OPA LOCKA BLVD OPA LOCKA FL 33054
BUSINESS: YOIMANY PAEZ ARC DIALYSIS NORTH DADE LLC 1986 OPA LOCKA BLVD 33054
PHONE: (786) 391-1733 BUSINESS STATUS: Open DATE ESTABLISHED: 05/08/20 DATE CLOSED:
LICENSE(S) RENT OFFICE OR SPACE FOR BUSINESS OTHERWISE LICENSED
CERTIFICATE OF USE NON RESIDENTIAL

MUA22001537 OK (11-19-2021)

MAILING: 681 FISHERMAN ST OPA LOCKA FL 33054
BUSINESS: MITCHOUN ALUSMA ALOOSEME ENTERPRISE,INC 681 FISHERMAN ST 33054
PHONE: (305) 975-0319 BUSINESS STATUS: Open DATE ESTABLISHED: 05/21/20 DATE CLOSED:
LICENSE(S) RENT OFFICE OR SPACE FOR BUSINESS OTHERWISE LICENSED
CERTIFICATE OF USE NON RESIDENTIAL

MUA22000190 OK (10-06-2021)

MAILING: 13747 NW 42 ANE OPA LOCKA FL 33054
BUSINESS: HUNG ANH DUONG D&A STUDIO INC 13747 NW 42 ANE 33054
PHONE: (786) 344-5253 BUSINESS STATUS: Open DATE ESTABLISHED: 05/21/20 DATE CLOSED:
LICENSE(S) STORAGE PER SQ FT
CERTIFICATE OF USE NON RESIDENTIAL

NO application

MAILING: 1875 OPA LOCKA BLVD OPA LOCKA FL 33054
BUSINESS: ALEJANDRO UZCATEGUI A+ CONSTRUCTION & MAINTENANCE LLC 1875 OPA LOCKA BLVD 33054
PHONE: (786) 296-9076 BUSINESS STATUS: Open DATE ESTABLISHED: 05/27/20 DATE CLOSED:
LICENSE(S) MANUFACTURE
CERTIFICATE OF USE NON RESIDENTIAL

NO application

MAILING: 2121 NW 139 ST BAY 8 OPA LOCKA FL 33054
BUSINESS: JULIO ALVAREZ J & T DESIGN CORP 2121 NW 139 ST BAY 8 33054
PHONE: (716) 909-4211 BUSINESS STATUS: Open DATE ESTABLISHED: 05/27/20 DATE CLOSED:
LICENSE(S) CABINET MAKER OR CARPENTER SHOP
CERTIFICATE OF USE NON RESIDENTIAL

NO application

MAILING: 2120 ALI BABA AVE OPA LOCKA FL 33054
BUSINESS: CLIFFORD ADAM ADAM'S GROCERY STORE 2120 ALI BABA AVE 33054
PHONE: (305) 301-4458 BUSINESS STATUS: Open DATE ESTABLISHED: 06/01/20 DATE CLOSED:
LICENSE(S) GROCERY
CERTIFICATE OF USE NON RESIDENTIAL

NO application

MAILING: 391 OPA LOCKA BLVD OPA LOCKA FL 33054
BUSINESS: TABATHA BAILY EMPOWERING MINDS, INC 391 OPA LOCKA BLVD 33054
PHONE: (305) 367-1248 BUSINESS STATUS: Open DATE ESTABLISHED: 06/01/20 DATE CLOSED:
LICENSE(S) PROFESSIONAL SERVICES
CERTIFICATE OF USE NON RESIDENTIAL

MUA21000399 OK (10-19-2020)

MAILING: 4127 NW 132 STREET OPA-LOCKA FL 33054
BUSINESS: DENIS R PADILLA D&D A/C RECOVERY CORP 4080 NW 132 ST BAY AX 33054

MUA22000675 OK (10-20-2021)

?

SELECTION CRITERIA: cblbusiness.bus_stat='O' AND establish BETWEEN '01/01/2020' AND '12/31/2020'

PHONE: (305) 721-7591 BUSINESS STATUS: Open DATE ESTABLISHED: 06/02/20 DATE CLOSED:
LICENSE(S) STORAGE PER SQ FT
CERTIFICATE OF USE NON RESIDENTIAL
RENT OFFICE OR SPACE FOR BUSINESS OTHERWISE LICENSED
RENT OFFICE OR SPACE FOR BUSINESS OTHERWISE LICENSED

MAILING: 14965 NW 22 T OPA LOCKA FL 33054
BUSINESS: GABRIEL URENA COOL CARS RD INC 14965 NW 22 CT 33054
PHONE: BUSINESS STATUS: Open DATE ESTABLISHED: 06/03/20 DATE CLOSED:
LICENSE(S) AUTO REPAIR SHOP AUTO BODY
CERTIFICATE OF USE NON RESIDENTIAL
No application / No records found

MAILING: 1731 OPA LOCKA BLVD OPA LOCKA FL 33054
BUSINESS: KARLA LEO 911 MARINE LLC 1731 OPA LOCKA BLVD 33054
PHONE: (786) 337-0827 BUSINESS STATUS: Open DATE ESTABLISHED: 06/04/20 DATE CLOSED:
LICENSE(S)
No application / No records found

MAILING: 1731 OPA LOCKA BLVD OPA LOCKA FL 33054
BUSINESS: KARLA LEO 911 MARINE LLC 1731 OPA LOCKA BLVD 33054
PHONE: (786) 337-0827 BUSINESS STATUS: Open DATE ESTABLISHED: 06/04/20 DATE CLOSED:
LICENSE(S) UPHOLSTERER, REPAIR, REFINISHING
CERTIFICATE OF USE NON RESIDENTIAL
No application – No records found

MAILING: 18457 NW 52ND PATH MIAMI GARDENS FL 33055
BUSINESS: JENIELY PONCE B. PONCE ELITE WOODWORK SERVICES CORP. 4100 NW 135 ST 33054
PHONE: (305) 345-4529 BUSINESS STATUS: Open DATE ESTABLISHED: 06/09/20 DATE CLOSED:
LICENSE(S) CABINET MAKER OR CARPENTER SHOP
CERTIFICATE OF USE NON RESIDENTIAL
No application – No records found

MAILING: 14015 NW 19 AVE OPA LOCKA FL 33054
BUSINESS: MIOSOTIS ALVARADO TITO'S AUTO SALES, INC 14015 NW 19 AVE 33054
PHONE: (786) 393-3061 BUSINESS STATUS: Open DATE ESTABLISHED: 06/16/20 DATE CLOSED:
LICENSE(S) AUTO BROKER / VEHICLE SALES
CERTIFICATE OF USE NON RESIDENTIAL
* No application (The only MUA was from 2022 (MUA 22092327))

MAILING: 6210 NW 173 ST APT 820 HIALEAH FL 33015
BUSINESS: CAPRICE EADY CCS COOKERY CAPRICE EADY CCS COOKERY 6210 NW 173 ST APT 820 33015
PHONE: BUSINESS STATUS: Open DATE ESTABLISHED: 06/17/20 DATE CLOSED:
LICENSE(S) PEDDLER
No application / No records found

MAILING: 2920 NW 160 ST MIAMI GARDENS FL 33054
BUSINESS: SAMUEL WALKER SAMUEL WALKER PEDDLERS 2920 NW 160 ST 33054
PHONE: BUSINESS STATUS: Open DATE ESTABLISHED: 06/24/20 DATE CLOSED:
LICENSE(S) PEDDLER
No application / No records found

MAILING: 2061 NW 141 ST OPA LOCKA FL 33054
BUSINESS: JUAN AMAURIS LOPEZ J A LOPEZ AUTO IMPORT LLC 2061 NW 141 ST 33054
PHONE: (305) 399-5796 BUSINESS STATUS: Open DATE ESTABLISHED: 07/13/20 DATE CLOSED:
LICENSE(S) AUTO BROKER / VEHICLE SALES
CERTIFICATE OF USE NON RESIDENTIAL
No application / No records found

SELECTION CRITERIA: cblbusiness.bus_stat='O' AND establish BETWEEN '01/01/2020' AND '12/31/2020'

MAILING: 1855 OPA LOCKA BLVD OPA LOCKA FL 33054
BUSINESS: DUNIESKY PINEIRO D & J STEEL LLC 1855 OPA LOCKA BLVD 33054
PHONE: (786) 222-1691 BUSINESS STATUS: Open DATE ESTABLISHED: 07/13/20 DATE CLOSED:
LICENSE(S) MUA20001554 OK (3-20-2020)

MAILING: 1855 OPA LOCKA BLVD OPA LOCKA FL 33054
BUSINESS: DUNIESKY PINEIRO D & J STEEL LLC 1855 OPA LOCKA BLVD 33054
PHONE: (786) 222-1691 BUSINESS STATUS: Open DATE ESTABLISHED: 07/13/20 DATE CLOSED:
LICENSE(S) MANUFACTURE
CERTIFICATE OF USE NON RESIDENTIAL

MAILING: 13379 NW 47 AVE OPA LCOKA , FL 33054
BUSINESS: GUILLERMO F NARDONE GFN AUTO SELL INC 13379 NW 47 AVE 33054
PHONE: (786) 234-0093 BUSINESS STATUS: Open DATE ESTABLISHED: 07/15/20 DATE CLOSED:
LICENSE(S) AUTO BROKER / VEHICLE SALES
CERTIFICATE OF USE NON RESIDENTIAL
Approved on 11/12/2022 under MUA23001287
Expired Process MUA20001311

MAILING: 13640 19 AVE BAY 18 OPA LOCKA FL 33054
BUSINESS: NORBERTO HERNANDEZ &W GLORIA E & E POWER CORP 13640 19 AVE BAY 18 33054
PHONE: (305) 965-5330 BUSINESS STATUS: Open DATE ESTABLISHED: 07/16/20 DATE CLOSED:
LICENSE(S) REPAIR AND SERVICE SHOPS
CERTIFICATE OF USE NON RESIDENTIAL
No application for 2020 / ~~only~~ ~~for~~ ~~2022~~ Pending on 2022 under MUA23001342

MAILING: 13350 NW 42 AVE UNIT 10 OPA LOCKA FL 33054
BUSINESS: JESSY FLEITES JESSY LASHES 13350 NW 42 AVE UNIT 10 33054
PHONE: (786) 236-0072 BUSINESS STATUS: Open DATE ESTABLISHED: 07/16/20 DATE CLOSED:
LICENSE(S) BEAUTY PARLORS AND BARBER SHOPS
CERTIFICATE OF USE NON RESIDENTIAL
No application for 2020 / Approved for 2022 under MUA22093959

MAILING: 2093 91 NW 139 STREET OPA-LOCKA FL 33054
BUSINESS: JOSE BONILLA JMB BODY SHOP INC 2093 NW 139 ST 33054
PHONE: (305) 823-6048 BUSINESS STATUS: Open DATE ESTABLISHED: 07/16/20 DATE CLOSED:
LICENSE(S) AUTOMOBILE BODYREPAIR&PAINTING&MECHANICS LIGHT MECHANICS / MECHANIC WORK
CERTIFICATE OF USE NON RESIDENTIAL
No application (Approved ~~under~~ on 2018 under MUA18004825

MAILING: 13760 NW 19 AVE BAY 15 OPA LOCKA FL 33054
BUSINESS: ERNESTO PATRANA UNITED METAL WORKS 13760 NW 19 AVE BAY 15 33054
PHONE: (786) 366-9460 BUSINESS STATUS: Open DATE ESTABLISHED: 07/16/20 DATE CLOSED:
LICENSE(S) MANUFACTURE
CERTIFICATE OF USE NON RESIDENTIAL
No application for 2020 / Approved on 2021 under MUA22000041 (10-21-21)

MAILING: 13491 NW 47 AVE OPA LOCKA FL 33054
BUSINESS: DENIS MARTINEZ DM ROOFING COMPANY INC. 13491 NW 47 AVE 33054
PHONE: (786) 267-3066 BUSINESS STATUS: Open DATE ESTABLISHED: 07/16/20 DATE CLOSED:
LICENSE(S) RENT OFFICE OR SPACE FOR BUSINESS OTHERWISE LICENSED
CERTIFICATE OF USE NON RESIDENTIAL
No application for 2020 / Approved on 2021 under MUA22089263 (12-07-2021

MAILING: 13331 NW 47 ST OPA LOCKA FL 33054

SELECTION CRITERIA: cblbusiness.bus_stat='O' AND establish BETWEEN '01/01/2020' AND '12/31/2020'

==========

BUSINESS: RICHARD GOMEZ SOLRAC INC 13331 NW 47 AVE 33054
PHONE: (786) 975-3289 BUSINESS STATUS: Open DATE ESTABLISHED: 07/16/20 DATE CLOSED:
LICENSE(S) BASIC SCHEDULE - RETAIL & WHOLESALE NOT OTHERWISE DEFINED IN FEE SCHEDULE
CERTIFICATE OF USE NON RESIDENTIAL
MUA21007044 on 9/9/2021

==========

MAILING: 12875 ALEXANDRIA DR OPA LOCKA FL 33054
BUSINESS: KENIA CABRERA KM AUTO PARTS INC 12875 ALEXANDRIA DR 33054
PHONE: (305) 903-5990 BUSINESS STATUS: Open DATE ESTABLISHED: 07/16/20 DATE CLOSED:
LICENSE(S) JUNK YARD/JUNK DEALERS,
CERTIFICATE OF USE NON RESIDENTIAL
MUA 20000932 on 2/18/2020

==========

MAILING: 3301 NW 127 ST OPA LOCKA FL 33054
BUSINESS: GLEN A ALAYON USA EXPORT AUTO PART CORP 3301 NW 127 ST 33054
PHONE: (786) 716-0000 BUSINESS STATUS: Open DATE ESTABLISHED: 07/22/20 DATE CLOSED:
LICENSE(S) RECYCLING SCRAP METAL/CARBOARD PAPER
SCRAP METAL PROCESSING
CERTIFICATE OF USE NON RESIDENTIAL
MUA 20001126 on 2/27/2020

==========

MAILING: 14510 NW 27 AVE OPA LOCKA FL 33054
BUSINESS: THASHAUNA HILL SHOE HAVEN INC 14510 NW 27 AVE 33054
PHONE: (305) 725-0114 BUSINESS STATUS: Open DATE ESTABLISHED: 07/27/20 DATE CLOSED:
LICENSE(S) BASIC SCHEDULE - RETAIL & WHOLESALE NOT OTHERWISE DEFINED IN FEE SCHEDULE
MATERIALS RECOVERY FACILITY
CERTIFICATE OF USE NON RESIDENTIAL
NO applications / No records except

==========

MAILING: 14900 NW 24 CT OPA LOCKA FL 33054
BUSINESS: RAMON GONZALEZ OWNER IMPORT AUTO GLASS CORP 14900 NW 24 CT 33054
PHONE: (786) 655- BUSINESS STATUS: Open DATE ESTABLISHED: 07/27/20 DATE CLOSED:
LICENSE(S) BASIC SCHEDULE - RETAIL & WHOLESALE NOT OTHERWISE DEFINED IN FEE SCHEDULE
CERTIFICATE OF USE NON RESIDENTIAL
No application

==========

MAILING: 2131 NW 139 ST OPA LOCKA FL 33054
BUSINESS: SERGIO RUIZ MM FLORIDA GROUP LLC 2131 NW 139 ST 33054
PHONE: (786) 464-9933 BUSINESS STATUS: Open DATE ESTABLISHED: 07/30/20 DATE CLOSED:
LICENSE(S) JANITORIAL SERVICES (1 TO 9 EMPLOYEES)(ALSO SEE "JANITOR 2"
CERTIFICATE OF USE NON RESIDENTIAL
RENT OFFICE OR SPACE FOR BUSINESS OTHERWISE LICENSED
Unit 21
MUA22001349

==========

MAILING: 14975 NW 22 CT OPA-LOCKA FL 33054
BUSINESS: JOHN CARLOS MUNOZ AUTOS JM MOTORS CORP. 14975 NW 22 CT 33054
PHONE: (786) 867-1456 BUSINESS STATUS: Open DATE ESTABLISHED: 07/30/20 DATE CLOSED:
LICENSE(S) AUTO BROKER / VEHICLE SALES
CERTIFICATE OF USE NON RESIDENTIAL
MUA22089539 on 12-14-2021

==========

MAILING: 4175 NW 135 ST OPA LOCKA FL 33054
BUSINESS: MARIA E PORRAS E-Z TO BUY CARS,CORP. 4175 NW 135 ST 33054
PHONE: (786) 487-0948 BUSINESS STATUS: Open DATE ESTABLISHED: 07/30/20 DATE CLOSED:
LICENSE(S) AUTO BROKER / VEHICLE SALES
CERTIFICATE OF USE NON RESIDENTIAL
No application

SELECTION CRITERIA: cblbusiness.bus_stat='O' AND establish BETWEEN '01/01/2020' AND '12/31/2020'

MAILING: 12880 ALEXANDRIA DR OPA LOCKA FL 33054
BUSINESS: M VALDEZ/R GUERRERO MR USED AUTO PARTS LLC 12880 ALEXANDRIA DR 33054
PHONE: (786) 247-5668 BUSINESS STATUS: Open DATE ESTABLISHED: 07/30/20 DATE CLOSED: MUA22001186
LICENSE(S) JUNK YARD/JUNK DEALERS,
CERTIFICATE OF USE NON RESIDENTIAL
Expired Process from 2021

MAILING: 13280 NW 43 AVE UNIT I OPA LOCKA FL 33054
BUSINESS: MIGUEL GARCIA FINE FINISH LLC 13280 NW 43 AVE UNIT I 33054
PHONE: (786) 606-6152 BUSINESS STATUS: Open DATE ESTABLISHED: 08/07/20 DATE CLOSED:
LICENSE(S) AUTO BROKER / VEHICLE SALES
CERTIFICATE OF USE NON RESIDENTIAL
No application

MAILING: 13990 NW 20 CT OPA LOCKA FL 33054
BUSINESS: OLIN PIERRE J P SUPERIOR MOTORS LLC 13990 NW 20 CT 33054
PHONE: (954) 993-8597 BUSINESS STATUS: Open DATE ESTABLISHED: 08/11/20 DATE CLOSED:
LICENSE(S) AUTO BROKER / VEHICLE SALES
CERTIFICATE OF USE NON RESIDENTIAL
No application

MAILING: 13431 NW 47 AVE OPA LOCKA FL 33054
BUSINESS: RAUL GONZALES RAG CUSTOMS INC 13431 NW 47 AVE 33054
PHONE: (786) 389-3860 BUSINESS STATUS: Open DATE ESTABLISHED: 08/11/20 DATE CLOSED:
LICENSE(S) BASIC SCHEDULE - RETAIL & WHOLESALE NOT OTHERWISE DEFINED IN FEE SCHEDULE
CERTIFICATE OF USE NON RESIDENTIAL
No application

MAILING: 13424 NW 38 CT OPA LOCKA FL 33054
BUSINESS: FERNANDO MIDDLETOM M & G TRADING USA CORP 13424 NW 38 CT 33054
PHONE: (305) 767-6492 BUSINESS STATUS: Open DATE ESTABLISHED: 08/11/20 DATE CLOSED:
LICENSE(S) BASIC SCHEDULE - RETAIL & WHOLESALE NOT OTHERWISE DEFINED IN FEE SCHEDULE
CERTIFICATE OF USE NON RESIDENTIAL
No application

MAILING: 301 S.BOX BRONOUGH ST. SUITE 300 TALLAHASSEE FL 32302-1757
BUSINESS: FLORIDA LEAGUE OF CITY NATIONAL WSETERN LIFE UNS,CO 301 S.BOX BRONOUGH ST. SUITE 300 32302-1757
PHONE: BUSINESS STATUS: Open DATE ESTABLISHED: 08/18/20 DATE CLOSED:
LICENSE(S) DISTRICT OR SALES OFFICE
No application

MAILING: 14785 NW 24 CT OPA LOCKA FL 33054
BUSINESS: TZVI SPATTER CROWN CELL INC 14785 NW 24 CT 33054
PHONE: (786) 618-5388 BUSINESS STATUS: Open DATE ESTABLISHED: 08/21/20 DATE CLOSED:
LICENSE(S) RENT OFFICE OR SPACE FOR BUSINESS OTHERWISE LICENSED
STORAGE PER SQ FT
DOES NOT STOCK MERCHANDISE BUT ORDERS FOR CUSTOMERS ONLY
CERTIFICATE OF USE NON RESIDENTIAL
MUA20020321 (9-15-2020)

MAILING: 12780 CAIRO LANE OPA LOCKA FL 33054
BUSINESS: KHALID ZLEKHAH MEGA USED AUTO PARTS, LLC 12780 CAIRO LANE 33054
PHONE: (305) 681-6848 BUSINESS STATUS: Open DATE ESTABLISHED: 08/31/20 DATE CLOSED:
LICENSE(S) RECYCLING SCRAP METAL/CARBOARD PAPER
CERTIFICATE OF USE NON RESIDENTIAL
MUA20001705 (5-11-2020)

SELECTION CRITERIA: cblbusiness.bus_stat='O' AND establish BETWEEN '01/01/2020' AND '12/31/2020'

MAILING: 13760 NW 19 AVE BAY # 14 OPA LOCKA FL 33054
BUSINESS: JAMAL KING ELITE WELDING FABRICATION INC 13760 NW 19 AVE BAY # 14 33054
PHONE: (305) 783-1546 BUSINESS STATUS: Open DATE ESTABLISHED: 09/04/20 DATE CLOSED:
LICENSE(S) MANUFACTURE
CERTIFICATE OF USE NON RESIDENTIAL Expired Process MUA20002617 7-30-2020

MAILING: 2335 NW 150 ST OPA LOCKA FL 33054
BUSINESS: YEUVGENY TEREKHIM AUTO PRIME FL INC 2335 NW 150 ST 33054
PHONE: (954) 980-1555 BUSINESS STATUS: Open DATE ESTABLISHED: 09/04/20 DATE CLOSED:
LICENSE(S) AUTO REPAIR SHOP AUTO BODY
CERTIFICATE OF USE NON RESIDENTIAL Expired Process MUA21006537/MUA21006539 Approved ~~under~~ on 2022 under MUA22092970

MAILING: 13185 NW 47 AVE OPA LOCKA FL 33054
BUSINESS: JOHN DORTON CEO INVECIBLE BOAT COMPANY 13185 NW 47 AVE 33054
PHONE: (305) 685-2704 BUSINESS STATUS: Open DATE ESTABLISHED: 09/04/20 DATE CLOSED:
LICENSE(S) BOAT MANUFACTURING
CERTIFICATE OF USE NON RESIDENTIAL NO application

MAILING: 4080 NW 132 ST BAY C & V OPA LOCKA FL 33054
BUSINESS: TRUCHAMP LLC TRUCHAMP LLC 4080 NW 132 ST BAY C & V 33054
PHONE: (305) 951-3112 BUSINESS STATUS: Open DATE ESTABLISHED: 09/04/20 DATE CLOSED:
LICENSE(S) STORAGE PER SQ FT
CERTIFICATE OF USE NON RESIDENTIAL NO application for 2020 (~~Approved on 2022 under~~

MAILING: 3683 NW 135 ST OPA LOCKA FL 33054
BUSINESS: MAGALIE MINCHAUD MR COPY PRINTING CENTER INC 3683 NW 135 ST 33054
PHONE: (305) 681-0041 BUSINESS STATUS: Open DATE ESTABLISHED: 09/04/20 DATE CLOSED:
LICENSE(S) MANUFACTURE
CERTIFICATE OF USE NON RESIDENTIAL MUA20001492 (3-16-2020)

MAILING: 7711 CARODELET AVE ST.LOUIS, OM 63105
BUSINESS: GLOBAL LIFE AND ACCIDENT INS COMP CENTENE CORPORATION 7711 CARODELET AVE 63105
PHONE: BUSINESS STATUS: Open DATE ESTABLISHED: 09/15/20 DATE CLOSED:
LICENSE(S) INSURANCE COMPANY - EACH OFFICE NO application

MAILING: 3820 NW 135 ST OPA LOCKA FL 33054
BUSINESS: RAMON ZAMBRANO PRIVATE JET AIRCRFT INTERIOR INC 3820 NW 135 ST BAY H 33054
PHONE: (305) 397-5038 BUSINESS STATUS: Open DATE ESTABLISHED: 09/23/20 DATE CLOSED:
LICENSE(S) AIRCRAFT REPAIR AND SERVICE
CERTIFICATE OF USE NON RESIDENTIAL NO application

MAILING: 4165 NW 132 ST BAY G & H OPA LOCKA FL 33054
BUSINESS: MAYKEL PEREZ MKL CABINETS & MORE LLC 4165 NW 132 ST BAY G & H 33054
PHONE: (786) 208-9032 BUSINESS STATUS: Open DATE ESTABLISHED: 09/24/20 DATE CLOSED:
LICENSE(S) CABINET MAKER OR CARPENTER SHOP
CERTIFICATE OF USE NON RESIDENTIAL MUA22000350 (10-11-2021)

MAILING: 13147 NW 42 AVE OPA LOCKA FL 33054

CITY OF OPA-LOCKA
BUSINESS ESTABLISHMENT INFORMATION

SELECTION CRITERIA: cblbusiness.bus_stat='O' AND establish BETWEEN '01/01/2020' AND '12/31/2020'

BUSINESS: AMADO EGUED STARLIGHT INVESTMENTS INC 13147 NW 42 AVE 33054
PHONE: (786) 367-9814 BUSINESS STATUS: Open DATE ESTABLISHED: 09/24/20 DATE CLOSED:
LICENSE(S) PROFESSIONAL SERVICES
CERTIFICATE OF USE NON RESIDENTIAL MUA20020590 (9-28-2020)

MAILING: 13105 CAIRO LANE OPA LOCKA FL 33054
BUSINESS: ANGEL VARGAS TOYO KING ENTERPRISES INC 13105 CAIRO LANE 33054
PHONE: (305) 688-6200 BUSINESS STATUS: Open DATE ESTABLISHED: 09/24/20 DATE CLOSED:
LICENSE(S) JUNK YARD/JUNK DEALERS,
CERTIFICATE OF USE NON RESIDENTIAL No application

MAILING:
BUSINESS: FATHIYYAH DOSTER JUICE DEFINED LLC 854 ALI BABA AVE 33054
PHONE: BUSINESS STATUS: Open DATE ESTABLISHED: 09/24/20 DATE CLOSED:
LICENSE(S) CAFETERIAS, LUNCH ROOMS
CERTIFICATE OF USE NON RESIDENTIAL MUA21000843 (11-05-2020)

MAILING: 2121 NW 139 ST BAY 8 OPA LOCKA FL 33054
BUSINESS: KASHADRIAN MYERS KUTE KARS AUTO SALES LLC 2121 NW 139 ST BAY 8 33054
PHONE: BUSINESS STATUS: Open DATE ESTABLISHED: 09/24/20 DATE CLOSED:
LICENSE(S) AUTO BROKER / VEHICLE SALES
CERTIFICATE OF USE NON RESIDENTIAL No application

MAILING: 14320 NW 24 AVE OPA LOCKA FL 33054
BUSINESS: RODNEY STANLEY HYPER TECH AUTO BODY & RESTORATION 14320 NW 24 AVE 33054
PHONE: (305) 928-0957 BUSINESS STATUS: Open DATE ESTABLISHED: 09/24/20 DATE CLOSED:
LICENSE(S) AUTO REPAIR SHOP AUTO BODY
CERTIFICATE OF USE NON RESIDENTIAL MUA20002426 (7-17-2020)

MAILING: 12875 ALEXANDRIA DR OPA LOCKA FL 33054
BUSINESS: JOSUE TAPIA ARIAS V & A AUTO EXPORT INC 12875 ALEXANDRIA DR 33054
PHONE: (305) 993-9655 BUSINESS STATUS: Open DATE ESTABLISHED: 10/01/20 DATE CLOSED:
LICENSE(S) JUNK YARD/JUNK DEALERS,
CERTIFICATE OF USE NON RESIDENTIAL No application under this name

---

MAILING: 445 S. MOORLAND SUITE 200 BROOKFIELD WI 35005
BUSINESS: KAREN HAFFNER OLD REPUBLIC SURETY COMP 445 S. MOORLAND SUITE 200 35005
PHONE: BUSINESS STATUS: Open DATE ESTABLISHED: 10/14/20 DATE CLOSED:
LICENSE(S) INSURANCE COMPANY - EACH OFFICE
No application -

MAILING: ONE AMERICAN ROW P.O.BOX 5056 HARTFORD CT 06102-5056
BUSINESS: CHERIE PASHLEY NASSAU LIFE ANNUITY COMP ONE AMERICAN ROW P.O.BOX 5056 06102-5056
PHONE: BUSINESS STATUS: Open DATE ESTABLISHED: 10/16/20 DATE CLOSED:
LICENSE(S) INSURANCE COMPANY - EACH OFFICE
No application

MAILING: ONE AMERICAN ROW P.O.B. 5056 HARTFORD CT 06102-5056
BUSINESS: THE NASAU COMP PHL VARIABLE INSURANCE COMP ONE AMERICAN ROW P.O.B. 5056 06102-5056
PHONE: BUSINESS STATUS: Open DATE ESTABLISHED: 10/19/20 DATE CLOSED:
LICENSE(S) INSURANCE COMPANY - EACH OFFICE
No application

SELECTION CRITERIA: cblbusiness.bus_stat='O' AND establish BETWEEN '01/01/2020' AND '12/31/2020'

MAILING: 14120 NW 27 AVE OPA LOCKA FL 33054
BUSINESS: KETSIA BASTIEN HORACE MULTISERVICES,INC 14120 NW 27 AVE 33054
PHONE: (786) 238-7048 BUSINESS STATUS: Open DATE ESTABLISHED: 10/20/20 DATE CLOSED:
LICENSE(S) BASIC SCHEDULE - RETAIL & WHOLESALE NOT OTHERWISE DEFINED IN FEE SCHEDULE
CERTIFICATE OF USE NON RESIDENTIAL

Expired Expired
Expired Processes (MUA20002819) (MUA20020411)

MAILING: 2346 NW 151 ST OPA LOCKA FL 33054
BUSINESS: NEDGEY GUERRIER IN & OUT TINTS DBA IN & OUT AUTO 2346 NW 151 ST 33054
PHONE: (754) 581-7107 BUSINESS STATUS: Open DATE ESTABLISHED: 10/23/20 DATE CLOSED:
LICENSE(S) REPAIR AND SERVICE SHOPS
CERTIFICATE OF USE NON RESIDENTIAL

No application

MAILING: 13935 NW 19 AVE OPA LOCKA FL 33054
BUSINESS: JOSE OVALLES OVALLES MOTORS INC 13935 NW 19 AVE 33054
PHONE: (754) 551-0550 BUSINESS STATUS: Open DATE ESTABLISHED: 10/23/20 DATE CLOSED:
LICENSE(S) AUTO BROKER / VEHICLE SALES
CERTIFICATE OF USE NON RESIDENTIAL

No application for 2020

MAILING: 4165 NW 132 ST BAY D OPA LOCKA FL 33054
BUSINESS: YULIA HARNANDEZ FNC ORNAMENTAL IRON INSTALLATION I 4165 NW 132 ST BAY D 33054
PHONE: (786) 704-1894 BUSINESS STATUS: Open DATE ESTABLISHED: 10/23/20 DATE CLOSED:
LICENSE(S) MANUFACTURE
CERTIFICATE OF USE NON RESIDENTIAL

No application for 2020 || There is a MUA22090375 for 2022

MAILING: 2343 NW 150 ST OPA-LOCKA FL 33054
BUSINESS: ROBERTO DEAHORA* DINAMIC BODY SHOP & COLLISION INC 2343 NW 150 ST 33054
PHONE: (786) 213-1969 BUSINESS STATUS: Open DATE ESTABLISHED: 11/05/20 DATE CLOSED:
LICENSE(S) AUTO REPAIR SHOP AUTO BODY
CERTIFICATE OF USE NON RESIDENTIAL

Body Shop Only - No Painting allowed MUA20020391 (9-17-2020)

MAILING: 701 OPA-LOCKA BLVD OPA-LOCKA FL 33054
BUSINESS: KHALED M. HASSAN ARMANDO TRADING DBA PEOPLE'S CHOICE 701 OPA-LOCKA BLVD 33054
PHONE: (786) 449-9045 BUSINESS STATUS: Open DATE ESTABLISHED: 11/30/20 DATE CLOSED:
LICENSE(S) CONVENIENCE STORES
CERTIFICATE OF USE NON RESIDENTIAL

MUA21000163 (10-06-2020)

MAILING: 14126 NW 27 AVE OPA-LOCKA FL 33054
BUSINESS: ZAHILY ICAZA WESTAR SISTERS CORP 14126 NW 27 AVE 33054
PHONE: (786) 534-9427 BUSINESS STATUS: Open DATE ESTABLISHED: 12/02/20 DATE CLOSED:
LICENSE(S) SALE OF GASOLINE
CERTIFICATE OF USE NON RESIDENTIAL

MUA20002666 (8-04-2020)

MAILING: 1600N.E. CORONADO DRIVE BLUE SPRINGS, MO 64014
BUSINESS: KACY SAWYERS HEARTLAND NATIONAL LIFE INSURANCE C 1600 NE CORONADO DR E 64014
PHONE: BUSINESS STATUS: Open DATE ESTABLISHED: 12/07/20 DATE CLOSED:
LICENSE(S) INSURANCE COMPANY - EACH OFFICE

No Application

CITY OF OPA-LOCKA
BUSINESS ESTABLISHMENT INFORMATION

SELECTION CRITERIA: cblbusiness.bus_stat='O' AND establish BETWEEN '01/01/2020' AND '12/31/2020'

MAILING: 14014 NW 19 AVE OPA LOCKA FL 33054
BUSINESS: BRENDA ARROLIGA JBS BODY SHOP CORP 14014 NW 19 AVE 33054
PHONE: (786) 553-5866 BUSINESS STATUS: Open DATE ESTABLISHED: 12/08/20 DATE CLOSED:
LICENSE(S) AUTO REPAIR SHOP AUTO BODY
CERTIFICATE OF USE NON RESIDENTIAL MUA21000380 (10-16-20) Body shop Only/ No painting

MAILING: 1290 ALI BABA AVE OPA LOCKA FL 33054
BUSINESS: RUBY L CAMPBELL LUCY B INC/LUCY B THRIFT STORE 1290 ALI BABA AVE 33054
PHONE: BUSINESS STATUS: Open DATE ESTABLISHED: 12/08/20 DATE CLOSED:
LICENSE(S) BASIC SCHEDULE - RETAIL & WHOLESALE NOT OTHERWISE DEFINED IN FEE SCHEDULE
CERTIFICATE OF USE NON RESIDENTIAL MUA21001128 (11-20-2020)

MAILING: 2900 N 24TH AVE HOLLYWOOD FL 33020
BUSINESS: SOPHIA TAGGART HEAVENLY FOODS 2900 N 24TH AVE 33020
PHONE: (786) 468-5328 BUSINESS STATUS: Open DATE ESTABLISHED: 12/08/20 DATE CLOSED:
LICENSE(S) PEDDLER
No application

MAILING: 14025 NW 19 AVE OPA LOCKA FL 33054
BUSINESS: ALEXIS BERNAL ULTIMATE CONTAINERS PRO REPAIR CORP 14025 NW 19 AVE 33054
PHONE: (786) 256-9499 BUSINESS STATUS: Open DATE ESTABLISHED: 12/08/20 DATE CLOSED:
LICENSE(S) REPAIR AND SERVICE SHOPS
CERTIFICATE OF USE NON RESIDENTIAL No application

MAILING: 852 ALI BABA AVE OPA LICKA FL 33054
BUSINESS: MARVIN JHONSON BRANEM INC/UP TOWN UPTOWN 852 ALI BABA AVE 33054
PHONE: (786) 262-8760 BUSINESS STATUS: Open DATE ESTABLISHED: 12/08/20 DATE CLOSED:
LICENSE(S) BASIC SCHEDULE - RETAIL & WHOLESALE NOT OTHERWISE DEFINED IN FEE SCHEDULE
CERTIFICATE OF USE NON RESIDENTIAL MUA22000923 ~~Rev~~ (10-28-2021)

MAILING: 2369 NW 149 ST OPA LOCKA FL 33054
BUSINESS: DARWIN PEREZ DARWIN'S TRUCK MECHANIC INC 2369 NW 149 ST 33054
PHONE: (786) 800-8694 BUSINESS STATUS: Open DATE ESTABLISHED: 12/08/20 DATE CLOSED:
LICENSE(S) AUTO REPAIR SHOP AUTO BODY
CERTIFICATE OF USE NON RESIDENTIAL Expired Process MUA21000867
There is an approved use in 2022 under MUA22089937 (1-6-22)

MAILING: 2950 NW 132 TERRACE OPA LOCKA FL 33054
BUSINESS: RICARDO LOPEZ ROCK & DIRT CONST EQUIP RENTAL INC 2950 NW 132 TERRACE 33054
PHONE: (305) 639-1888 BUSINESS STATUS: Open DATE ESTABLISHED: 12/22/20 DATE CLOSED:
LICENSE(S) PARKING LOTS, STORAGE GARAGE
CERTIFICATE OF USE NON RESIDENTIAL MUA21007043 (9-09-2021)

MAILING: 14949 NW 27 AVE OPA LOCKA FL 33054
BUSINESS: RAUL RODRIGUEZ EWASH THREE CO 14549 NW 27 AVE 33054
PHONE: (305) 254-4400 BUSINESS STATUS: Open DATE ESTABLISHED: 12/23/20 DATE CLOSED:
LICENSE(S) MUA21002864 (2-24-2021)

MAILING: 14785 NW 24TH AVE OPA LOCKA FL 33054
BUSINESS: DIANA VILLEGAS END PALLETS INC 14785 NW 24TH AVE 33054
PHONE: (654) 716-0267 BUSINESS STATUS: Open DATE ESTABLISHED: 12/23/20 DATE CLOSED:
LICENSE(S) BASIC SCHEDULE - RETAIL & WHOLESALE NOT OTHERWISE DEFINED IN FEE SCHEDULE

No application

SELECTION CRITERIA: cblbusiness.bus_stat='O' AND establish BETWEEN '01/01/2020' AND '12/31/2020'

CERTIFICATE OF USE NON RESIDENTIAL

MAILING: 2121 NW 139 ST BAY 16 OPA LOCKA FL 33054
BUSINESS: ERMITRE ROBERT EDEN AUTO PARTS EXPORTS,INC 2121 NW 139 ST BAY 16 33054
PHONE: (786) 285-1656 BUSINESS STATUS: Open DATE ESTABLISHED: 12/28/20 DATE CLOSED:
LICENSE(S) JUNK DEALERS,
JUNK DEALERS,
CERTIFICATE OF USE NON RESIDENTIAL

No application

MAILING: 14525 NW 79 AVE MIAMI LAKES FL 33016
BUSINESS: M L MERCADO LOS GORDITOS CAFE 16525 NW 79 AVE 33016
PHONE: BUSINESS STATUS: Open DATE ESTABLISHED: 12/31/20 DATE CLOSED:
LICENSE(S) PINBALL, AND THE LIKE
JUKE BOXES

No application

MAILING: 13915 NW 19 VE OPA LOCKA FL 33054
BUSINESS: LAZARO QUINONES CHAMPION SPORT FISHING 13915 NW 19 VE 33054
PHONE: (786) 333-2133 BUSINESS STATUS: Open DATE ESTABLISHED: 12/31/20 DATE CLOSED:
LICENSE(S) CABINET MAKER OR CARPENTER SHOP
CERTIFICATE OF USE NON RESIDENTIAL

Expired Process MUA21006016 in 7/22/21

TOTAL BUSINESS : 102

LOCATIONS & ENTITIES V9.0
DATE: 02/01/2023
TIME: 16:50:11

CITY OF OPA-LOCKA
BUSINESS ESTABLISHMENT INFORMATION

PAGE NUMBER: 1
MODULE : rep_estab

SELECTION CRITERIA: cblbusiness.bus_stat='O' AND establish BETWEEN '01/01/2021' AND '12/31/2021'

MAILING: 13640 NW 19 AVE OPA LOCKA FL 33054
BUSINESS: RONALD PRADO R.P. MOLDING INC 13640 NW 19 AVE 33054
PHONE: (786) 683-2126 BUSINESS STATUS: Open DATE ESTABLISHED: 01/05/21 DATE CLOSED:
LICENSE(S) MANUFACTURE
CERTIFICATE OF USE NON RESIDENTIAL MUA21002789 (2-22-2021)

MAILING: 3856 NW 125 ST OPA LOCKA FL 33054
BUSINESS: ERNESTO REYES FIS GROUP INC 3856 NW 125 ST 33054
PHONE: (786) 622-3308 BUSINESS STATUS: Open DATE ESTABLISHED: 01/05/21 DATE CLOSED:
LICENSE(S) MANUFACTURE
CERTIFICATE OF USE NON RESIDENTIAL MUA21000238 (10-10-2020)

MAILING: 2153 OPA LOCKA BLVD OPA LOCKA FL 33054
BUSINESS: IGNACIO GARCIA VENETIAN CEMENT LLC 2153 OPA LOCKA BLVD 33054
PHONE: (786) 356-9971 BUSINESS STATUS: Open DATE ESTABLISHED: 01/05/21 DATE CLOSED:
LICENSE(S) MANUFACTURE
CERTIFICATE OF USE NON RESIDENTIAL MUA22091001 (2-18-2022)

MAILING: 13418 NW 38 CT OPA LOCKA FL 33054
BUSINESS: JEFFREY LEFLORE CHARLES ENTERPRISE GROUP LLC 13418 NW 38 CT 33054
PHONE: (786) 560-1486 BUSINESS STATUS: Open DATE ESTABLISHED: 01/07/21 DATE CLOSED:
LICENSE(S) STORAGE PER SQ FT
CERTIFICATE OF USE NON RESIDENTIAL
RENT OFFICE OR SPACE FOR BUSINESS OTHERWISE LICENSED No application

---

MAILING: 14350 NW 24 AVE OPA LOCKA FL 33054
BUSINESS: FIDIAS AYBAR REMA TRANSPORT SPECIALIST LLC 14350 NW 24 AVE 33054
PHONE: (305) 609-6550 BUSINESS STATUS: Open DATE ESTABLISHED: 01/20/21 DATE CLOSED:
LICENSE(S) AUTO REPAIR SHOP AUTO BODY
CERTIFICATE OF USE NON RESIDENTIAL No application

MAILING: 4196 NW 135 ST OPA LOCKA FL 33054
BUSINESS: DARITZA GIL EXCELLENT HEALTH CORP 4196 NW 135 ST 33054
PHONE: BUSINESS STATUS: Open DATE ESTABLISHED: 01/22/21 DATE CLOSED:
LICENSE(S) STORAGE PER SQ FT
CERTIFICATE OF USE NON RESIDENTIAL No application

MAILING: 13640 NW 19 AVE #11 OPA LOCKA FL 33054
BUSINESS: JEANITE JOSEPH J&B ORNAMENTAL IRON WORK 13640 NW 19 AVE # 11 33054
PHONE: (786) 488-9618 BUSINESS STATUS: Open DATE ESTABLISHED: 01/22/21 DATE CLOSED:
LICENSE(S) MUA21007582 (9-27-2021)

MAILING: 13640 NW 19 AVE #11 OPA LOCKA FL 33054
BUSINESS: JEANETE JOSEPH J&B ORNAMENTAL IRON WORK 13640 NW 19 AVE # 11 33054
PHONE: (786) 488-9618 BUSINESS STATUS: Open DATE ESTABLISHED: 01/22/21 DATE CLOSED: Same
LICENSE(S) MANUFACTURE
CERTIFICATE OF USE NON RESIDENTIAL

MAILING: 12740 CARIO LANE OPA-LOCKA FL 33054
BUSINESS: MAIRELYS VALDES MR USED AUTO PARTS 2 LLC 12740 CARIO LANE 33054 No application

CITY OF OPA-LOCKA
BUSINESS ESTABLISHMENT INFORMATION

SELECTION CRITERIA: cblbusiness.bus_stat='O' AND establish BETWEEN '01/01/2021' AND '12/31/2021'

PHONE: (786) 247-5668 BUSINESS STATUS: Open DATE ESTABLISHED: 01/22/21 DATE CLOSED:
LICENSE(S)

MAILING: 12740 CARIO LANE OPA-LOCKA FL 33054
BUSINESS: MAIRELYS VALDEZ MR USED AUTO PARTS 2 LLC 12740 CAIRO LN 33054
PHONE: (786) 247-5668 BUSINESS STATUS: Open DATE ESTABLISHED: 01/22/21 DATE CLOSED:
LICENSE(S) JUNK DEALERS,
CERTIFICATE OF USE NON RESIDENTIAL
No application

MAILING: 13159 NW 42 AVE OPA LOCKA FL 33054
BUSINESS: YOEL VOVAL MGR YOEL MASTER METAL WELDER LLC 13159 NW 42 AVE 33054
PHONE: (305) 967-9639 BUSINESS STATUS: Open DATE ESTABLISHED: 01/22/21 DATE CLOSED:
LICENSE(S) MANUFACTURE
CERTIFICATE OF USE NON RESIDENTIAL
MUA22000007 (10-01-2021)

MAILING: 13145 NW 45 AVE OPA LOCKA FL 33054
BUSINESS: ALEXIS PEREZ CLASSIC METALS SUPPLIERS CORP 13145 NW 45 AVE 33054
PHONE: (305) 822-7713 BUSINESS STATUS: Open DATE ESTABLISHED: 01/27/21 DATE CLOSED:
LICENSE(S) BASIC SCHEDULE - RETAIL & WHOLESALE NOT OTHERWISE DEFINED IN FEE SCHEDULE
CERTIFICATE OF USE NON RESIDENTIAL
MUA21001697 (12-23-2020)

MAILING: 2099 OPA LOCKA BLVD OPA LOCKA FL 33054
BUSINESS: VINCENT DEL NANO EAH WHOLE SALE AND PRINTING 2099 OPA LOCKA BLVD 33054
PHONE: (786) 558-5120 BUSINESS STATUS: Open DATE ESTABLISHED: 01/28/21 DATE CLOSED: No application
LICENSE(S)

MAILING: 2099 OPA LOCKA BLVD OPA LOCKA FL 33054
BUSINESS: VINCENT DEL NANO ESH WHOLE SALE AND PRINT 2099 OPA LOCKA BLVD 33054
PHONE: BUSINESS STATUS: Open DATE ESTABLISHED: 01/28/21 DATE CLOSED: No application
LICENSE(S) BASIC SCHEDULE - RETAIL & WHOLESALE NOT OTHERWISE DEFINED IN FEE SCHEDULE
CERTIFICATE OF USE NON RESIDENTIAL

MAILING: 14975 NW 22 AVE OPA-LOCKA FL 33054
BUSINESS: NATHAN WILLIAMS HOUSE OF DRIP 14975 NW 22 AVE 33054
PHONE: (561) 403-9260 BUSINESS STATUS: Open DATE ESTABLISHED: 01/29/21 DATE CLOSED:
LICENSE(S) MERCHANT-RETAIL OR WHOLESALE
CERTIFICATE OF USE NON RESIDENTIAL
MUA21000239 (10-10-2020)

MAILING: 12720 ALEXA DR OPA LOCKA FL 33054
BUSINESS: PEDRO PEREZ GONZALEZ PABLO PARTS CORP 12720 ALEXANDRIA DR 33054
PHONE: (786) 247-5660 BUSINESS STATUS: Open DATE ESTABLISHED: 02/01/21 DATE CLOSED:
LICENSE(S) JUNK YARD/JUNK DEALERS,
CERTIFICATE OF USE NON RESIDENTIAL
Expired Process - MUA21001653 (12-21-2020)

MAILING: 13280 NW 43 AVE OPA LOCKA FL 33054
BUSINESS: ARIEL VALDEZ PISCES MARINE SERVICES LLC 13280 NW 43 AVE 33054
PHONE: (786) 368-0000 BUSINESS STATUS: Open DATE ESTABLISHED: 02/01/21 DATE CLOSED:
LICENSE(S) BOAT REPAIR
CERTIFICATE OF USE NON RESIDENTIAL
Expired Process MUA22092999 (5-10-2022)

SELECTION CRITERIA: cblbusiness.bus_stat='O' AND establish BETWEEN '01/01/2021' AND '12/31/2021'

MAILING: 4600 NW 128 ST RD OPA LOCKA FL 33054
BUSINESS: BRENDON FARRELL SHERWOOD AVIONIC & ACCESSORIES 4600 NW 128 ST 33054
PHONE: (305) 477-2994 BUSINESS STATUS: Open DATE ESTABLISHED: 02/02/21 DATE CLOSED:
LICENSE(S) AIRCRAFT REPAIR AND SERVICE
CERTIFICATE OF USE NON RESIDENTIAL
No application

MAILING: 2343 NW ALI BABA AVE OPA LOCKA FL 33054
BUSINESS: JULBERT JEAN PIERRE THREE A BODY SHOP 2343 NW ALI BABA AVE 33054
PHONE: (786) 217-3972 BUSINESS STATUS: Open DATE ESTABLISHED: 02/03/21 DATE CLOSED:
LICENSE(S) AUTO REPAIR SHOP AUTO BODY
CERTIFICATE OF USE NON RESIDENTIAL
No application / Expired Process MUA22095548 (8-22-2022)

MAILING: 1492 NW 196 ST MIAMI GARDENS FL 33169
BUSINESS: THOMAS HARPER THOMAS HARPER 1492 NW 196 ST 33169
PHONE: (786) 306-0157 BUSINESS STATUS: Open DATE ESTABLISHED: 02/03/21 DATE CLOSED:
LICENSE(S) PEDDLER
~~MUA22095548~~
No application / ~~Expired Process~~ ~~(8-22-2022)~~

MAILING: 850 ALI BABA AVE OPA LOCKA FL 33054
BUSINESS: LAQUINTA BROWN SHOPLALOVE 850 ALI BABA AVE 33054
PHONE: (305) 510-5613 BUSINESS STATUS: Open DATE ESTABLISHED: 02/03/21 DATE CLOSED:
LICENSE(S) BASIC SCHEDULE - RETAIL & WHOLESALE NOT OTHERWISE DEFINED IN FEE SCHEDULE
CERTIFICATE OF USE NON RESIDENTIAL
MUA21000870 (11-05-2020)
MUA22090089 Expired Process (1-12-2022)

MAILING: 4110 NW 135 ST BAY B OPA LOCKA FL 33054
BUSINESS: WILLIAM RADINSON WJ COLLISION CENTER CORP 4110 NW 135 ST BAY B 33054
PHONE: (786) 482-1018 BUSINESS STATUS: Open DATE ESTABLISHED: 02/03/21 DATE CLOSED:
LICENSE(S) AUTO REPAIR SHOP AUTO BODY
CERTIFICATE OF USE NON RESIDENTIAL
MUA21002509 (2-09-2021)

MAILING: 4481 NW 171 TERR MIAMI FL 33055
BUSINESS: CHENITA BECK SHAKE EM UP SNACKS & DINNERS INC 4481 NW 171 TER 33055
PHONE: (305) 496-8073 BUSINESS STATUS: Open DATE ESTABLISHED: 02/03/21 DATE CLOSED:
LICENSE(S) PEDDLER
Expired Process - MUA21004330 (5-04-2021)

MAILING: 2001 NW 139 ST OPA LOCKA FL 33054
BUSINESS: LAZARO QUINTERO JERRY'S DINER 2001 NW 139 ST 33054
PHONE: (786) 333-2133 BUSINESS STATUS: Open DATE ESTABLISHED: 02/03/21 DATE CLOSED:
LICENSE(S) DRIVE IN - TAKE OUT
CERTIFICATE OF USE NON RESIDENTIAL
Expired Process MUA21003978 (4-19-2021)
MUA22092647 (4-26-2022)

MAILING: 2190 ALI BABA AVE OPA LOCKA FL 33054
BUSINESS: NITAI C SAHA DOLPHIN SUPERMARKET INC 2190 ALI BABA AVE 33054
PHONE: BUSINESS STATUS: Open DATE ESTABLISHED: 02/03/21 DATE CLOSED:
LICENSE(S) BASIC SCHEDULE - RETAIL & WHOLESALE NOT OTHERWISE DEFINED IN FEE SCHEDULE
CERTIFICATE OF USE NON RESIDENTIAL
CERTIFICATE OF USE NON RESIDENTIAL
Expired Process MUA21003513 (3/26/21)
Expired Process MUA22000720 10/21/21

MAILING: 13091 OPRT SAID RD BAY 7 OPA LOCKA FL 33054
BUSINESS: JUAN CARLOS ENCARNACION DIPLOMATICO AUTO SALES LLC 13091 OPRT SAID RD BAY 7 33054
No application

SELECTION CRITERIA: cblbusiness.bus_stat='O' AND establish BETWEEN '01/01/2021' AND '12/31/2021'

PHONE: (305) 607-8975 BUSINESS STATUS: Open DATE ESTABLISHED: 02/03/21 DATE CLOSED:
LICENSE(S) AUTO BROKER / VEHICLE SALES
CERTIFICATE OF USE NON RESIDENTIAL

MAILING: 13438 NW CT OPA LOCKA FL 33054
BUSINESS: ALBERTO SEB DOOGH AND PASTIES,INC 13438 NW CT 33054
PHONE: (305) 335-3605 BUSINESS STATUS: Open DATE ESTABLISHED: 02/12/21 DATE CLOSED:
LICENSE(S) MANUFACTURE
CERTIFICATE OF USE NON RESIDENTIAL
No application under 13438 NW Ct.

MAILING:
BUSINESS: OMAR BEDIER ALBEDIER LLC/TEKRAK LLC 13680 NW 19 AVE BAY 14 33054
PHONE: BUSINESS STATUS: Open DATE ESTABLISHED: 02/12/21 DATE CLOSED:
LICENSE(S) BASIC SCHEDULE - RETAIL & WHOLESALE NOT OTHERWISE DEFINED IN FEE SCHEDULE
CERTIFICATE OF USE NON RESIDENTIAL
MUA22093624 (6/02/2022)

MAILING: 3420 NW 135 ST OPA LOCKA FL 33054
BUSINESS: GLEN A ALAYON YUNK YARD MIAMI TIRES 3420 NW 135 ST 33054
PHONE: (786) 828-2848 BUSINESS STATUS: Open DATE ESTABLISHED: 02/12/21 DATE CLOSED:
LICENSE(S) BASIC SCHEDULE - RETAIL & WHOLESALE NOT OTHERWISE DEFINED IN FEE SCHEDULE
CERTIFICATE OF USE NON RESIDENTIAL
No application

MAILING: 13440 NW 38 COURT OPA-LOCKA FL 33054
BUSINESS: RICHIE & RASHAD REVERE SOUTH FLORIDA COMMERCE & LOGISTICS 13440 NW 38 CT 33054
PHONE: (305) 815-8113 BUSINESS STATUS: Open DATE ESTABLISHED: 02/12/21 DATE CLOSED:
LICENSE(S) BASIC SCHEDULE - RETAIL & WHOLESALE NOT OTHERWISE DEFINED IN FEE SCHEDULE
CERTIFICATE OF USE NON RESIDENTIAL
MUA21002451 (2-05-2021)

MAILING: 12805 PORTSAID ROAD OPA LOCKA FL 33054
BUSINESS: GLEN ADRIA ALAYON JUNK YARD MIAMI CORP 12901 PORTSAID RD BAY 1 33054
PHONE: (305) 546-5456 BUSINESS STATUS: Open DATE ESTABLISHED: 02/17/21 DATE CLOSED:
LICENSE(S) BASIC SCHEDULE - RETAIL & WHOLESALE NOT OTHERWISE DEFINED IN FEE SCHEDULE
CERTIFICATE OF USE NON RESIDENTIAL
MUA20020166 (9-04-2020)

MAILING: 3820 NW 135 ST BAY M OPA LOCKA FL 33054
BUSINESS: DIEGO FERNANDEZ MONDIAL MOTOR USA II 3820 NW 135 ST BAY M 33054
PHONE: BUSINESS STATUS: Open DATE ESTABLISHED: 03/01/21 DATE CLOSED:
LICENSE(S) BASIC SCHEDULE - RETAIL & WHOLESALE NOT OTHERWISE DEFINED IN FEE SCHEDULE
AUTO REPAIR SHOP AUTO BODY
CERTIFICATE OF USE NON RESIDENTIAL
MUA21007604 (9-28-2021)

MAILING: 1925 OPA-LOCKA BLVD OPA-LOCKA FL 33054
BUSINESS: ANTONIO GONZALEZ TONY'S CARPENTRY CORP 1925 OPA LOCKA 33054
PHONE: (786) 295-7833 BUSINESS STATUS: Open DATE ESTABLISHED: 03/01/21 DATE CLOSED:
LICENSE(S) CABINET MAKER OR CARPENTER SHOP
CERTIFICATE OF USE NON RESIDENTIAL
Expired Process MUA22000404 (10-12-2021)

MAILING: 13680 NW 19 AVE BAY 12 OPA LOCKA FL 33054
BUSINESS: STANISLAV MAKHNOVSKIL WOOD WAVE DESING LLC 13680 NW 19 AVE BAY 12 33054

Expired Process - MUA21007720 (9-30-2021)
MUA22095661 (8-26-2022) (OK)

SELECTION CRITERIA: cblbusiness.bus_stat='O' AND establish BETWEEN '01/01/2021' AND '12/31/2021'

==========

PHONE: (786) 547-2408 BUSINESS STATUS: Open DATE ESTABLISHED: 03/03/21 DATE CLOSED:
LICENSE(S) CABINET MAKER OR CARPENTER SHOP
CERTIFICATE OF USE NON RESIDENTIAL

==========

MAILING: 13980 NW 20TH COURT OPA LOCKA FL 33054
BUSINESS: ISSER NEW IDN ENTERPRISES LLC 13980 NW 20TH COURT 33054
PHONE: (305) 563-4900 BUSINESS STATUS: Open DATE ESTABLISHED: 03/04/21 DATE CLOSED:
LICENSE(S) BASIC SCHEDULE - RETAIL & WHOLESALE NOT OTHERWISE DEFINED IN FEE SCHEDULE
CERTIFICATE OF USE NON RESIDENTIAL MUA21002673 (2-16-2021)

==========

MAILING: 13931 NW 27 AVE OPA LOCKA FL 33054
BUSINESS: DENNIS E. RODRIGUEZ MI ULTIMO VIAJE A EUROPA 13931 NW 27 AVE 33054
PHONE: (305) 988-4848 BUSINESS STATUS: Open DATE ESTABLISHED: 03/10/21 DATE CLOSED:
LICENSE(S) MUA21003052 (3-3-2021)

==========

MAILING: 13931 NW 27 AVE OPA LOCKA FL 33054
BUSINESS: DENNIS E. RODRIGUEZ MI ULTIMO VIAJE A EUROPA 13931 NW 27 AVE 33054
PHONE: (305) 988-4848 BUSINESS STATUS: Open DATE ESTABLISHED: 03/10/21 DATE CLOSED: same
LICENSE(S)

==========

MAILING: 2616 W 54 PLACE HIALEAH FL 33016
BUSINESS: DANIEL DOMINGUEZ SAZON DE TIA 3301 NW 127 ST 33054
PHONE: (786) 930-5797 BUSINESS STATUS: Open DATE ESTABLISHED: 03/11/21 DATE CLOSED:
LICENSE(S) PEDDLER
NO application

==========

MAILING: 3827 3833 NW 125 ST OPA LOCKA FL 33054
BUSINESS: ALEXANDRA PORTUGESE AVENIR REAL ESTATE CAPITAL GROUP LL 3827 NW 125 ST 33054 Expired Process MUA21002971 3/01/2021
PHONE: (786) 669-0713 BUSINESS STATUS: Open DATE ESTABLISHED: 03/11/21 DATE CLOSED:
LICENSE(S) MANUFACTURE
CERTIFICATE OF USE NON RESIDENTIAL Expired Process MUA21002969 3/01/2021

==========

MAILING: 6720 W 2 CT HIALEAH FL 33012
BUSINESS: JUAN LANZA L PILOTO OPA LOCKA OF FLORIDA LLC 411 SHARAR AVE 33054
PHONE: (786) 548-0482 BUSINESS STATUS: Open DATE ESTABLISHED: 03/16/21 DATE CLOSED:
LICENSE(S) APARTMENTS WITH ONE BEDROOM
APARTMENTS WITH TWO BEDROOMS
CERTIFICATE OF USE RESIDENTIAL MUA21007334 (9-20-2021)

==========

MAILING: 13931 NW 27 AVE OPA LOCKA FL 33054
BUSINESS: DENNIS E. RODRIGUEZ MI ULTIMO VIAJE A EUROPA 13931 NW 27 AVE 33054
PHONE: (305) 988-4848 BUSINESS STATUS: Open DATE ESTABLISHED: 03/17/21 DATE CLOSED:
LICENSE(S) BASIC SCHEDULE - RETAIL & WHOLESALE NOT OTHERWISE DEFINED IN FEE SCHEDULE
CERTIFICATE OF USE NON RESIDENTIAL MUA21003052 (3-3-2021)

==========

MAILING: 2100 LINCOL AVE OPA LOCKA FL 33054
BUSINESS: FADI FOQAHAA NEIGHBOURS MARKET 2100 LINCOL AVE 33054
PHONE: BUSINESS STATUS: Open DATE ESTABLISHED: 03/22/21 DATE CLOSED:
LICENSE(S) BASIC SCHEDULE - RETAIL & WHOLESALE NOT OTHERWISE DEFINED IN FEE SCHEDULE
CERTIFICATE OF USE NON RESIDENTIAL

==========

Pending MUA 23000130 (10/06/2022)
Expired Process MUA 21006108 (7/27/2021)
Expired Process MUA 21004633 (5/18/2021)

SELECTION CRITERIA: cblbusiness.bus_stat='O' AND establish BETWEEN '01/01/2021' AND '12/31/2021'

MAILING: 13001 NW 38 AVE UNIT-A OPA LOCKA FL 33054
BUSINESS: CHIP MEISSNER ATLAS PACKAGING AND DISPLAYS 13001 NW 38 AVE UNIT-A 33054
PHONE: (229) 327-4694 BUSINESS STATUS: Open DATE ESTABLISHED: 03/25/21 DATE CLOSED:
LICENSE(S) STORAGE PER SQ FT
CERTIFICATE OF USE NON RESIDENTIAL MUA21003027 (3-3-2021)

MAILING: 14101 NW 19 AVE OPA LOCKA FL 33054
BUSINESS: STEPHANIE JOURDAN BAYVIEW CONCEPT LLC 14101 NW 19 AVE 33054
PHONE: (786) 208-1133 BUSINESS STATUS: Open DATE ESTABLISHED: 03/26/21 DATE CLOSED:
LICENSE(S) BASIC SCHEDULE - RETAIL & WHOLESALE NOT OTHERWISE DEFINED IN FEE SCHEDULE
CERTIFICATE OF USE NON RESIDENTIAL MUA21003031 (3-3-2021) & MUA22000090 (10-04-21)

MAILING: 2167 OPA LOCKA BLVD OPA LOCKA FL 33054
BUSINESS: RITA VILLARROEL SET INVESTORS LLC 2167 OPA LOCKA BLVD 33054
PHONE: (786) 344-5798 BUSINESS STATUS: Open DATE ESTABLISHED: 03/30/21 DATE CLOSED:
LICENSE(S) BASIC SCHEDULE - RETAIL & WHOLESALE NOT OTHERWISE DEFINED IN FEE SCHEDULE
CERTIFICATE OF USE NON RESIDENTIAL MUA22090737 (2-09-2022)

MAILING: 13404 NW 38 CT OPA LOCKA FL 33054
BUSINESS: FABIAN HANCHELL FREIGHT CONSOLIDATORS 13404 NW 38 CT 33054
PHONE: (305) 900-7240 BUSINESS STATUS: Open DATE ESTABLISHED: 03/31/21 DATE CLOSED:
LICENSE(S) BASIC SCHEDULE - RETAIL & WHOLESALE NOT OTHERWISE DEFINED IN FEE SCHEDULE
CERTIFICATE OF USE NON RESIDENTIAL MUA21003051 (3-03-2021)

MAILING: 12992 NW 42 AVE UNIT 125 OPA LOCKA FL 33054
BUSINESS: EDUARDO DEDIEU MIAMI FINEST AUTO INC 12992 NW 42 AVE UNIT 125 33054
PHONE: (786) 239-0363 BUSINESS STATUS: Open DATE ESTABLISHED: 04/05/21 DATE CLOSED:
LICENSE(S) AUTO BROKER / VEHICLE SALES
CERTIFICATE OF USE NON RESIDENTIAL MUA21002357 (2-02-2021)

MAILING: 2151 OPA LOCKA BLVD OPA-LOCKA FL 33054
BUSINESS: MARIANO PASTOR OPALOCKA SOCCER LAND LLC 2151 OPA LOCKA BLVD 33054
PHONE: (305) 761-1240 BUSINESS STATUS: Open DATE ESTABLISHED: 04/05/21 DATE CLOSED:
LICENSE(S) INDOOR SPORTS - SOCCER
CERTIFICATE OF USE NON RESIDENTIAL
MERCHANT-RETAIL OR WHOLESALE MUA21004023 (4-20-2021)

MAILING: 13995 NW 19 AVE OPA LOCKA FL 33054
BUSINESS: E.RAMIREZ,M.JIMENEZ E & M GRANITE AND QUARTS INC 13995 NW 19 AVE 33054
PHONE: BUSINESS STATUS: Open DATE ESTABLISHED: 04/07/21 DATE CLOSED:
LICENSE(S) MANUFACTURE
CERTIFICATE OF USE NON RESIDENTIAL MUA22000018 (10-01-2021)

MAILING: 3390 NW 127 ST OPA LOCKA FL 33054
BUSINESS: EMMANUEL MAROTTA MAROTTA TANK LLC 3390 NW 127 ST 33054
PHONE: (786) 501-0045 BUSINESS STATUS: Open DATE ESTABLISHED: 04/08/21 DATE CLOSED:
LICENSE(S) AUTO PARTS DEALER
STORAGE PER SQ FT
CERTIFICATE OF USE NON RESIDENTIAL No application

SELECTION CRITERIA: cblbusiness.bus_stat='O' AND establish BETWEEN '01/01/2021' AND '12/31/2021'

MAILING: 1877 OPA LOCKA BLVD OPA LOCKA FL 33054
BUSINESS: DIEGO OLIVERA J.C. CAPE HOHNIE C COPE JR INC 1877 OPA LOCKA BLVD 33054
PHONE: (305) 710-9565 BUSINESS STATUS: Open DATE ESTABLISHED: 04/13/21 DATE CLOSED:
LICENSE(S) RENT OFFICE OR SPACE FOR BUSINESS OTHERWISE LICENSED
CERTIFICATE OF USE NON RESIDENTIAL

No application MUA21003930 (4/15/2021)
~~Different Name~~ ~~Johnnie C. Cope Sr. Inc.~~

MAILING: 1877 OPA LOCKA BLVD OPA LOCKA FL 33054
BUSINESS: D OLIVERA/J C COPE JOHNNIE C. COPE JR. INC 1877 OPA LOCKA BLVD 33054
PHONE: (305) 710-9565 BUSINESS STATUS: Open DATE ESTABLISHED: 04/22/21 DATE CLOSED:
LICENSE(S) RENT OFFICE OR SPACE FOR BUSINESS OTHERWISE LICENSED
STORAGE PER SQ FT
CERTIFICATE OF USE NON RESIDENTIAL

MUA 21003930 (4/15/2021)

MAILING: 13151 NW 42 AVE OPA LOCKA FL 33054
BUSINESS: T & J BLINDS CORP T & J BLINDS CORP 13151 NW 42 AVE 33054
PHONE: (281) 965-9728 BUSINESS STATUS: Open DATE ESTABLISHED: 04/23/21 DATE CLOSED:
LICENSE(S) MANUFACTURE
CERTIFICATE OF USE NON RESIDENTIAL

MUA22090481 (1-28-2022)

MAILING: 12730 CAIRO LANE OPA LOCKA FL 33054
BUSINESS: MARK GHELMAN ZIMILIS MG AUTO PART LLC 12735 CAIRO LN 33054
PHONE: (786) 608-6158 BUSINESS STATUS: Open DATE ESTABLISHED: 04/27/21 DATE CLOSED:
LICENSE(S) JUNK DEALERS,
CERTIFICATE OF USE NON RESIDENTIAL

MUA21004948 (6-02-2021)

MAILING: 2099 NW 141 ST BAY 18-19 OPA LOCKA FL 33054
BUSINESS: SASHAYE WILLIAMS RIGHT RIDE AUTO SALES LLC 2099 NW 141 ST BAY 18-19 33054
PHONE: (407) 821-6190 BUSINESS STATUS: Open DATE ESTABLISHED: 04/28/21 DATE CLOSED:
LICENSE(S)

No application

MAILING: 2099 NW 141 ST BAY 18-19 OPA LOCKA FL 33054
BUSINESS: SASHAYE WILLIAMS RIGHT RIDE AUTO SALES LLC 2099 NW 141 ST BAY 18-19 33054
PHONE: (407) 821-6190 BUSINESS STATUS: Open DATE ESTABLISHED: 04/28/21 DATE CLOSED:
LICENSE(S) AUTO BROKER / VEHICLE SALES
CERTIFICATE OF USE NON RESIDENTIAL

No application

MAILING: 1709 OPA LOCKA BLVD OPA LOCKA FL 33054
BUSINESS: ALEX HODEBOURG ALEX WOOD CONCEPTS LLC/QUINT 1709 OPA LOCKA BLVD 33054
PHONE: (786) 779-6648 BUSINESS STATUS: Open DATE ESTABLISHED: 04/30/21 DATE CLOSED:
LICENSE(S) CABINET MAKER OR CARPENTER SHOP

Expired Process MUA22000471 (10-14-2021)

MAILING: 1709 OPA LOCKA BLVD OPA LOCKA FL 33054
BUSINESS: ALEX HODEBOURG ALEX WOOD CONCEPTS LLC/QUINT 1703 OPA LOCKA BLVD 33054
PHONE: (786) 779-6648 BUSINESS STATUS: Open DATE ESTABLISHED: 04/30/21 DATE CLOSED:
LICENSE(S) CABINET MAKER OR CARPENTER SHOP
CERTIFICATE OF USE NON RESIDENTIAL

MUA22000468 (10-14-2021)

MAILING: 2305 NW 150 ST OPA LOCKA FL 33054
BUSINESS: ELIAS MEDREDY ATLANTIC BOAT REPAIR 2305 NW 150 ST 33054

No application

SELECTION CRITERIA: cblbusiness.bus_stat='O' AND establish BETWEEN '01/01/2021' AND '12/31/2021'

PHONE: (786) 624-0746 BUSINESS STATUS: Open DATE ESTABLISHED: 04/30/21 DATE CLOSED:
LICENSE(S) BOAT REPAIR
CERTIFICATE OF USE NON RESIDENTIAL

MAILING: 1709 OPA LOCKA BLVD OPA LOCKA FL 33054
BUSINESS: ALEX HODEBOURG ALEX WOOD CONCEPTS LLC/QUINT 1709 OPA LOCKA BLVD 33054
PHONE: (786) 779-6648 BUSINESS STATUS: Open DATE ESTABLISHED: 04/30/21 DATE CLOSED:
LICENSE(S)
Expired Process MUA22000471 (10-14-2021)

MAILING: 12900 NW 30 AVE BAY 11 OPA LOCKA FL 33054
BUSINESS: PABLO MENICHETTI MENI TECH LLC 12900 NW 30 AVE BAY 11 33054
PHONE: (786) 202-4876 BUSINESS STATUS: Open DATE ESTABLISHED: 05/20/21 DATE CLOSED:
LICENSE(S)
MUA21002016 (1-14-2021)

MAILING: 12900 NW 30 AVE BAY 11 OPA LOCKA FL 33054
BUSINESS: PABLO MENICHETTI MENI TECH LLC 12900 NW 30 AVE BAY 7 33054
PHONE: (786) 202-4876 BUSINESS STATUS: Open DATE ESTABLISHED: 05/20/21 DATE CLOSED:
LICENSE(S)
MUA21002015 (1-14-2021)

MAILING: 12900 NW 30 AVE BAY 11 OPA LOCKA FL 33054
BUSINESS: PABLO MENICHETTI MENI TECH LLC 12900 NW 30 AVE BAY 11 33054
PHONE: (786) 202-4876 BUSINESS STATUS: Open DATE ESTABLISHED: 05/20/21 DATE CLOSED: same
LICENSE(S) BASIC SCHEDULE - RETAIL & WHOLESALE NOT OTHERWISE DEFINED IN FEE SCHEDULE
CERTIFICATE OF USE NON RESIDENTIAL
used ~~Merchandise~~ Auto parts sales & storage

MAILING: 5600 N FLAGLER DRIVE # 1706 WEST PALM BEACH FL 33414
BUSINESS: MARC-JOHNN BILL, INC MARC-JOHNN BILL, INC 2063 OPA LOCKA BLVD 33054
PHONE: BUSINESS STATUS: Open DATE ESTABLISHED: 05/20/21 DATE CLOSED:
LICENSE(S) STORAGE PER SQ FT
CERTIFICATE OF USE NON RESIDENTIAL
No application

MAILING: 12900 NW 30 AVE BAY 11 OPA LOCKA FL 33054
BUSINESS: PABLO MINICHETTI MENI TECH LLC 12900 NW 30 AVE BAY 7 33054
PHONE: (786) 202-4876 BUSINESS STATUS: Open DATE ESTABLISHED: 05/20/21 DATE CLOSED:
LICENSE(S) AUTO REPAIR SHOP AUTO BODY
CERTIFICATE OF USE NON RESIDENTIAL
Mechanical Repair - MUA21002015 (1-14-2021)

MAILING: 13408 NW 38 CT OPA LOCKA FL 33054
BUSINESS: LUKAS CORREA CORREA HOLDING GROUP LLC 13408 NW 38 CT 33054
PHONE: (954) 907-8410 BUSINESS STATUS: Open DATE ESTABLISHED: 05/28/21 DATE CLOSED:
LICENSE(S) BASIC SCHEDULE - RETAIL & WHOLESALE NOT OTHERWISE DEFINED IN FEE SCHEDULE
CERTIFICATE OF USE NON RESIDENTIAL
No application

MAILING: 301 S. BRNOUGH ST 300 TALLAHASSEE FL 32302-1757
BUSINESS: LIFESECURE INC CO. LIFESECURE INC CO. 301 S. BRNOUGH ST 300 32302-1757
PHONE: BUSINESS STATUS: Open DATE ESTABLISHED: 06/24/21 DATE CLOSED:
LICENSE(S) INSURANCE MUNICIPAL
No application

MAILING: 4090 NW 132 ST BAY K & P OPA LOCKA FL 33054
BUSINESS: NIOVYS AMCHADO CABRERA MACHADO- CABRERA UPHLSTERY LLC 4090 NW 132 ST BAY K & P 33054
PHONE: (786) 908-5505 BUSINESS STATUS: Open DATE ESTABLISHED: 06/25/21 DATE CLOSED:

MUA22000149 (10/05/2021)

SELECTION CRITERIA: cblbusiness.bus_stat='O' AND establish BETWEEN '01/01/2021' AND '12/31/2021'

LICENSE(S) REPAIR AND SERVICE SHOPS
CERTIFICATE OF USE NON RESIDENTIAL

MAILING: 4090 NW 132 ST BAY J & Q OPA LOCKA FL 33054
BUSINESS: DENIS A COREA COREA GROUP, INC. 4090 NW 132 ST BAY J & Q 33054
PHONE: (786) 659-3629 BUSINESS STATUS: Open DATE ESTABLISHED: 06/25/21 DATE CLOSED:
LICENSE(S) STORAGE PER SQ FT
CERTIFICATE OF USE NON RESIDENTIAL MUA21006401 (8-10-2021)

MAILING: 14021 NW 20 CT OPA LOCKA FL 33054
BUSINESS: JOES QUEZADA MOTORSPORT MIAMI INC 14021 NW 20 CT 33054
PHONE: (786) 381-1161 BUSINESS STATUS: Open DATE ESTABLISHED: 07/01/21 DATE CLOSED:
LICENSE(S) AUTOMOBILE BODYREPAIR&PAINTING&MECHANICS LIGHT MECHANICS / MECHANIC WORK MUA22090225 (1-19-2022)
CERTIFICATE OF USE NON RESIDENTIAL
BASIC SCHEDULE - RETAIL & WHOLESALE NOT OTHERWISE DEFINED IN FEE SCHEDULE

MAILING: 4240 NW 133 ST UNIT A OPA LOCKA FL 33054
BUSINESS: LAZARO PEREZ LAZARITO BODYSHOP INC 4240 NW 133 ST UNIT A 33054
PHONE: (786) 494-0947 BUSINESS STATUS: Open DATE ESTABLISHED: 07/02/21 DATE CLOSED:
LICENSE(S) AUTO REPAIR SHOP AUTO BODY MUA22000318 (10-08-2021)
CERTIFICATE OF USE NON RESIDENTIAL

MAILING: 13300 NW 27 AVE OPA LOCKA FL 33054
BUSINESS: YU CHEN HI WINGS INC 13300 NW 27 AVE 33054
PHONE: (786) 362-5019 BUSINESS STATUS: Open DATE ESTABLISHED: 07/16/21 DATE CLOSED:
LICENSE(S) DRIVE IN - TAKE OUT
CAFETERIAS, LUNCH ROOMS
CERTIFICATE OF USE NON RESIDENTIAL No application

MAILING: 4165 NW 132 ST BAY K OPA LOCKA FL 33054
BUSINESS: ANGEL SANCHEZ PROFESSIONAL GLASS MASTER CORP 4165 NW 132 ST BAY K 33054
PHONE: (786) 489-4288 BUSINESS STATUS: Open DATE ESTABLISHED: 07/19/21 DATE CLOSED:
LICENSE(S) STORAGE PER SQ FT
CERTIFICATE OF USE NON RESIDENTIAL No application

MAILING: 1899 OPA LOCKA BLVD OPA LOCKA FL 33054
BUSINESS: SAMUEL E ROTH SER ENTERPRISESS INC 1899 OPA LOCKA BLVD 33054
PHONE: (561) 325-5875 BUSINESS STATUS: Open DATE ESTABLISHED: 07/19/21 DATE CLOSED:
LICENSE(S) BASIC SCHEDULE - RETAIL & WHOLESALE NOT OTHERWISE DEFINED IN FEE SCHEDULE
CERTIFICATE OF USE NON RESIDENTIAL No application

MAILING: 11925 NE 2TH AVE APT 109 NORTH MIAMI FL 33161
BUSINESS: EULISER MUNIZ USA TOWING & PARTS LLC 13051 PORT SAID RD BAY # 6 33054
PHONE: (786) 357-5818 BUSINESS STATUS: Open DATE ESTABLISHED: 07/19/21 DATE CLOSED:
LICENSE(S) BASIC SCHEDULE - RETAIL & WHOLESALE NOT OTHERWISE DEFINED IN FEE SCHEDULE
CERTIFICATE OF USE NON RESIDENTIAL Expired Process MUA21005001 (6-04-2021)

MAILING: 13863 NW 19 AVE OPA LOCKA FL 33054
BUSINESS: LILIAN MENDEZ SLEEP LILY MATTRESS CORP 13863 NW 19 AVE 33054
Expired Process MUA21005110 (6-09-2021)

SELECTION CRITERIA: cblbusiness.bus_stat='O' AND establish BETWEEN '01/01/2021' AND '12/31/2021'

PHONE: BUSINESS STATUS: Open DATE ESTABLISHED: 07/19/21 DATE CLOSED:
LICENSE(S) BASIC SCHEDULE - RETAIL & WHOLESALE NOT OTHERWISE DEFINED IN FEE SCHEDULE
CERTIFICATE OF USE NON RESIDENTIAL

MAILING: 14569 NW 25 AVE OPA LOCKA FL 33054
BUSINESS: NELSON FUENTE NFL RECYCLING CORP 14569 NW 25 AVE 33054
PHONE: (786) 227-9831 BUSINESS STATUS: Open DATE ESTABLISHED: 07/21/21 DATE CLOSED:
LICENSE(S) RECYCLING SCRAP METAL/CARBOARD PAPER
STORAGE PER SQ FT
SCRAP METAL PROCESSING
CERTIFICATE OF USE NON RESIDENTIAL

No application

MAILING: 831 EAST 28 ST HIALEAH FL 33013
BUSINESS: EVELIA M GONZALEZ EVE'S BBQ INC 831 E 28 ST 33013
PHONE: (305) 781-9118 BUSINESS STATUS: Open DATE ESTABLISHED: 08/12/21 DATE CLOSED:
LICENSE(S)

No application

MAILING: 831 EAST 28 ST HIALEAH FL 33013
BUSINESS: EVELIA GONZALEZ EVE'S BBQ INC 831 EAST 28 ST 33013
PHONE: (305) 781-9118 BUSINESS STATUS: Open DATE ESTABLISHED: 08/12/21 DATE CLOSED:
LICENSE(S) PEDDLER

No application

MAILING: 12951 PORT SAID RD BAY 12 OPA LOCKA FL 33054
BUSINESS: YOSVANY SANCHEZ RUIZ YOSAN MACHINE SHOP & IRON WORK INC 12951 PORT SAID RD BAY 12 33054
PHONE: (407) 844-1931 BUSINESS STATUS: Open DATE ESTABLISHED: 08/19/21 DATE CLOSED:
LICENSE(S) MANUFACTURE
CERTIFICATE OF USE RESIDENTIAL
CERTIFICATE OF USE NON RESIDENTIAL

MUA22000311 (10-08-2021)

MAILING: 2056 OPA LOCKA BLVD OPA LOCKA FL 33054
BUSINESS: QUIANA MOBILEY AMIYAH KOUTURE INC. 2056 OPA LOCKA BLVD 33054
PHONE: (954) 847-0115 BUSINESS STATUS: Open DATE ESTABLISHED: 08/24/21 DATE CLOSED:
LICENSE(S) BASIC SCHEDULE - RETAIL & WHOLESALE NOT OTHERWISE DEFINED IN FEE SCHEDULE
CERTIFICATE OF USE NON RESIDENTIAL

MUA21006422 (8-11-2021)

MAILING: 13052 NW 43 AVE OPA LOCKA FL 33054
BUSINESS: ORELVIS ROQUE ROQUE BROTHER'S INC 13052 NW 43 AVE 33054
PHONE: (786) 295-2782 BUSINESS STATUS: Open DATE ESTABLISHED: 08/26/21 DATE CLOSED:
LICENSE(S) PARKING LOTS, STORAGE GARAGE
CERTIFICATE OF USE NON RESIDENTIAL

MUA21004807 (5-26-2021)

MAILING: 1990 OPA LOCKA BLVD OPA LOCKA FL 33054
BUSINESS: DAVID & KATHY WILLIAMS JUST GRAPH I T PRINTINGS DESIGN LLC 1990 OPA LOCKA BLVD 33054
PHONE: (786) 413-3550 BUSINESS STATUS: Open DATE ESTABLISHED: 09/01/21 DATE CLOSED:
LICENSE(S) MANUFACTURE
CERTIFICATE OF USE NON RESIDENTIAL

MUA21006577 (8-18-2021)

MAILING: 13760 NW 19 AVENUE #4 OPA LOCKA FL 33054
BUSINESS: FRANCISCO J PASTRANA JUST TO PLEASE YOU LLC 3970 NW 132 ST BAY M 33054
PHONE: (954) 649-9859 BUSINESS STATUS: Open DATE ESTABLISHED: 09/03/21 DATE CLOSED:

No application

SELECTION CRITERIA: cblbusiness.bus_stat='O' AND establish BETWEEN '01/01/2021' AND '12/31/2021'

LICENSE(S) BASIC SCHEDULE - RETAIL & WHOLESALE NOT OTHERWISE DEFINED IN FEE SCHEDULE
CERTIFICATE OF USE NON RESIDENTIAL

MAILING: 14705 NW 22 CT OPA LOCKA FL 33054
BUSINESS: ROHAN SINGH TIP TOP COLLISION REPAIRS LLC 14705 NW 22 CT 33054
PHONE: (305) 456-4800 BUSINESS STATUS: Open DATE ESTABLISHED: 09/03/21 DATE CLOSED:
LICENSE(S) AUTOMOBILE BODYREPAIR&PAINTING&MECHANICS LIGHT MECHANICS / MECHANIC WORK
CERTIFICATE OF USE NON RESIDENTIAL MUA21006952 (9/03/2021)

MAILING: 780 FISHERMAN ST OPA LOCKA FL 33054
BUSINESS: AZAAN MANIAR SCHOOL MUNCHIES LLC 780 FISHERMAN ST 33054
PHONE: BUSINESS STATUS: Open DATE ESTABLISHED: 09/14/21 DATE CLOSED:
LICENSE(S) MOBILE VENDORS, LUNCH STAND PORTABLE OR MOVING
NO application

MAILING: 605 N HIGWAY 169 SUITE # 800 PLYMOUTH MN 55441
BUSINESS: JULIE LAWSON OBI NATIONAL INSURANCE COMP 605 N HIGWAY 169 SUITE # 800 55441
PHONE: BUSINESS STATUS: Open DATE ESTABLISHED: 09/24/21 DATE CLOSED:
LICENSE(S) INSURANCE COMPANY - EACH OFFICE
NO application

MAILING: 321 OPA LOCKA BLVD OPA LOCKA FL 33054
BUSINESS: MEDICAL CENTER COMMUNTY MEDICAL GROUP 321 OPA LOCKA BLVD 33054
PHONE: BUSINESS STATUS: Open DATE ESTABLISHED: 09/29/21 DATE CLOSED:
LICENSE(S) RENT OFFICE OR SPACE FOR BUSINESS OTHERWISE LICENSED
CERTIFICATE OF USE NON RESIDENTIAL
D.C. - D.D.S.- M.D. - N.D. - D.S.C., OTHER MUA21007589 (9-27-2021)

MAILING: 3400 NW 135 ST BLDG B OPA LOCKA FL 33054
BUSINESS: LASHONDA MCCALLUM KAPP ACADEMY INC 3400 NW 135 ST BLDG B 33054
PHONE: BUSINESS STATUS: Open DATE ESTABLISHED: 09/30/21 DATE CLOSED:
LICENSE(S) PRIVATE, FOR PROFIT
CERTIFICATE OF USE NON RESIDENTIAL MUA21006554 (8-17-2021)

MAILING: 1295 STATE ST CORP TAX E410 SPRINGFIELD MA 01111-0001
BUSINESS: CHARLS SHATTUCK MASSACHUSETTS MUTUAL LIFE INSU COMP 1295 STATE ST CORP TAX E 01111-0001
PHONE: BUSINESS STATUS: Open DATE ESTABLISHED: 10/06/21 DATE CLOSED:
LICENSE(S) INSURANCE MUNICIPAL
NO application

MAILING: 4351 NW 133TH ST OPA LOCKA FL 33054
BUSINESS: SA RECYCLING LLC DBA SA RECYCLING SA RECYCLING LLC DBA SA RECYCLING 4351 NW 133TH ST 33054
PHONE: (714) 270-1638 BUSINESS STATUS: Open DATE ESTABLISHED: 10/07/21 DATE CLOSED:
LICENSE(S) SCRAP METAL PROCESSING
CERTIFICATE OF USE NON RESIDENTIAL MUA21006901

MAILING: 14120 A NW 27 AVE OPA LOCKA FL 33054
BUSINESS: MARIE V NAHOMIE JEAN CHARLES MJEL SERVICE LLC 14120 A NW 27 AVE 33054
PHONE: (786) 444-5725 BUSINESS STATUS: Open DATE ESTABLISHED: 10/08/21 DATE CLOSED:
LICENSE(S) BASIC SCHEDULE - RETAIL & WHOLESALE NOT OTHERWISE DEFINED IN FEE SCHEDULE
CERTIFICATE OF USE NON RESIDENTIAL

Expired Process MUA22089929 (1-06-2022)

SELECTION CRITERIA: cblbusiness.bus_stat='O' AND establish BETWEEN '01/01/2021' AND '12/31/2021'

MAILING: 14010 NW 22 AVE OPA LOCKA FL 33054
BUSINESS: JORGE MIRANDA ALL WOOD ENTERPRISES INC 14010 NW 22 AVE 33054
PHONE: (305) 979-2574 BUSINESS STATUS: Open DATE ESTABLISHED: 10/14/21 DATE CLOSED:
LICENSE(S) CABINET MAKER OR CARPENTER SHOP
CERTIFICATE OF USE NON RESIDENTIAL
NO application

MAILING: 12990 NW 42 AVE UNIT 124 OPA LOCKA FL 33054
BUSINESS: R TOUSE & M PARVIS AUTO SOLDIERS LLC 12990 NW 42 AVE UNIT 124 33054
PHONE: (786) 697-7235 BUSINESS STATUS: Open DATE ESTABLISHED: 10/14/21 DATE CLOSED:
LICENSE(S) AUTO BROKER / VEHICLE SALES
AUTO BROKER / VEHICLE SALES
CERTIFICATE OF USE NON RESIDENTIAL
MUA22000009 (10/01/2021)

MAILING: ONE SAMMONS PLAZA SIOUX FALLS SD FL 57193
BUSINESS: ETHAN FUNKE NORTH AMERICAN COMP FOR FOR & HAELT ONE SAMMONS PLZ 57193
PHONE: BUSINESS STATUS: Open DATE ESTABLISHED: 10/15/21 DATE CLOSED:
LICENSE(S) INSURANCE COMPANY - EACH OFFICE
NO application

MAILING: 11405 M COMMUNITY HOUSE RD # 600 CHARLOTTE NC 28277
BUSINESS: SAKARI KENT SENIOR SOMPO AMERICAN INSURANCE CO 11405 M COMMUNITY HOUSE RD # 600 28277
PHONE: BUSINESS STATUS: Open DATE ESTABLISHED: 10/15/21 DATE CLOSED:
LICENSE(S) INSURANCE COMPANY - EACH OFFICE
NO application

MAILING: ONE SAMMONS PLAZA SIUX FALLS SD 57193
BUSINESS: ETHAN FUNKE MIDLAD NATIONAL LIFE INSURANCE COMP ONE SAMMONS PLZ 57193
PHONE: BUSINESS STATUS: Open DATE ESTABLISHED: 10/15/21 DATE CLOSED:
LICENSE(S) INSURANCE COMPANY - EACH OFFICE
No application

MAILING: 1 HORACE MANN PLAZA SPRINGFIELD IL 62715
BUSINESS: JEREMY STUENKEL NATIONAL TEACHERS ASSOC LIFE INS CO 1 HORACE MANN PLZ 62715
PHONE: BUSINESS STATUS: Open DATE ESTABLISHED: 10/15/21 DATE CLOSED:
LICENSE(S) INSURANCE COMPANY - EACH OFFICE
No application

MAILING: 4300 NW 135 ST OPA LOCKA FL 33054
BUSINESS: JORGE CUERVO TRUCK PARTS SOLUTION IMP & EXP INC 4300 NW 135 ST 33054
PHONE: (305) 525-5372 BUSINESS STATUS: Open DATE ESTABLISHED: 10/15/21 DATE CLOSED:
LICENSE(S) BASIC SCHEDULE - RETAIL & WHOLESALE NOT OTHERWISE DEFINED IN FEE SCHEDULE
CERTIFICATE OF USE NON RESIDENTIAL
No application

MAILING: 13015 NW 45 AVE OPA LOCKA FL 33054
BUSINESS: CAMILO DIAZ STORMWISE HURRICANE PROTECTION LLC 13015 NW 45 AVE 33054
PHONE: (305) 597-7797 BUSINESS STATUS: Open DATE ESTABLISHED: 10/21/21 DATE CLOSED:
LICENSE(S) MANUFACTURE
CERTIFICATE OF USE NON RESIDENTIAL
NO application

MAILING: 14705 NW 22 CT OPA LOCKA FL 33054
BUSINESS: ROHAN SINGH TIPTOP AUTO COLLISION REPAIR LLC 14705 NW 22 CT 33054
PHONE: (305) 456-4800 BUSINESS STATUS: Open DATE ESTABLISHED: 10/22/21 DATE CLOSED:
MUA21006952 (9/03/2021)

SELECTION CRITERIA: cblbusiness.bus_stat='O' AND establish BETWEEN '01/01/2021' AND '12/31/2021'

LICENSE(S) AUTOMOBILE BODYREPAIR&PAINTING&MECHANICS LIGHT MECHANICS / MECHANIC WORK
CERTIFICATE OF USE NON RESIDENTIAL

MAILING: 1239 NE 110 ST MIAMI FL 33161
BUSINESS: DELORES JOHNSON DELORES JOHNSON 1239 N E 27 AVE 33161
PHONE: (786) 991-7485 BUSINESS STATUS: Open DATE ESTABLISHED: 10/28/21 DATE CLOSED:
LICENSE(S) PEDDLER
No application

MAILING: 683 FISHERMAN ST OPA LOCKA FL 33054
BUSINESS: RODRICK WRIGHT INK HAVEN LLC DBA INK HAVEN LLC 683 FISHERMAN ST 33054 Different Name
PHONE: (786) 506-2082 BUSINESS STATUS: Open DATE ESTABLISHED: 10/28/21 DATE CLOSED:
LICENSE(S) PROFESSIONAL SERVICES
CERTIFICATE OF USE NON RESIDENTIAL MUA22000513 (10-15-2021) for Ink Heaven

MAILING: P O BOX 12700 DURHAM NC 27709
BUSINESS: NANCY CALLAS accounter PAVONIA LIFE INSURANCE CO OF MCHIGA 12700 POBOX 27709
PHONE: BUSINESS STATUS: Open DATE ESTABLISHED: 11/01/21 DATE CLOSED:
LICENSE(S) INSURANCE COMPANY - EACH OFFICE
No application

MAILING: 3121 NW 134 ST OPA LOCKA FL 33054
BUSINESS: WILLIAMS ICABALCETA PEDDLERS WILLIAMS ICABALCETA PEDDLERS 3121 NW 134 ST 33054
PHONE: (786) 604-3044 BUSINESS STATUS: Open DATE ESTABLISHED: 11/02/21 DATE CLOSED:
LICENSE(S) PEDDLER
No application

MAILING: 7440 WOODLAND DR INDIANAPOLEIS IN 46278
BUSINESS: JEREMY SCHETTLE ALL SAVERS INSURANCE COMPANY 7440 WOODLAND DR 46278
PHONE: BUSINESS STATUS: Open DATE ESTABLISHED: 11/03/21 DATE CLOSED:
LICENSE(S) INSURANCE COMPANY - EACH OFFICE
No application

MAILING: P.O.BOX 2450 GRND RAPIDS MI 49501
BUSINESS: SECURITY NATIONAL CO SECURITY NATIONAL INSURANCE CO 900 S PINE ISLAND RD STE 600 33314
PHONE: BUSINESS STATUS: Open DATE ESTABLISHED: 11/04/21 DATE CLOSED:
LICENSE(S) INSURANCE VENDING - EACH LOCATION
No application

MAILING: 2111 NW 139 ST BAY 17 OPA LOCKA FL 33054
BUSINESS: JOHNY PIERRE JOHNY PIERRE 2111 NW 139 ST BAY 17 33054
PHONE: (720) 671-8449 BUSINESS STATUS: Open DATE ESTABLISHED: 11/22/21 DATE CLOSED:
LICENSE(S) STORAGE PER SQ FT
CERTIFICATE OF USE NON RESIDENTIAL MUA22001421 (11-16-2021)

MAILING: 1021 SUPERIOR ST OPA LOCKA FL 33054
BUSINESS: BENITO HEREDIA CAMPANA BENITO HEREDIA CAMPANA 1021 SUPERIOR ST 33054
PHONE: (786) 238-5217 BUSINESS STATUS: Open DATE ESTABLISHED: 11/23/21 DATE CLOSED:
LICENSE(S) PEDDLER
No application

MAILING: 13455 NW 47 AVE OPA LOCKA FL 33054
BUSINESS: CARLOS SEZUMAGA W30 INC 13455 NW 47 AVE 33054
PHONE: (305) 823-6991 BUSINESS STATUS: Open DATE ESTABLISHED: 12/02/21 DATE CLOSED:
MUA22001092 (11-02-2021)

SELECTION CRITERIA: cblbusiness.bus_stat='O' AND establish BETWEEN '01/01/2021' AND '12/31/2021'

LICENSE(S) BASIC SCHEDULE - RETAIL & WHOLESALE NOT OTHERWISE DEFINED IN FEE SCHEDULE
CERTIFICATE OF USE NON RESIDENTIAL

MAILING: 14045 NW 19 AVE OPA LOCKA FL 33054
BUSINESS: DAMIAN MARTINEZ LUIS SIMPLY PAK LLC 14045 NW 19 AVE 33054
PHONE: (786) 560-8342 BUSINESS STATUS: Open DATE ESTABLISHED: 12/03/21 DATE CLOSED:
LICENSE(S) PACKER AND SHIPPER, PACKING HOUSES
CERTIFICATE OF USE NON RESIDENTIAL MUA 22000749 (10-21-2021)

MAILING: 13090 NW 27 AVE OPA LOCKA FL 33054
BUSINESS: FRANK D'ANNUNZIO FDLP HOLDINGS LLC DAB LAUNDROMART 13090 NW 27 AVE 33054
PHONE: (954) 772-7100 BUSINESS STATUS: Open DATE ESTABLISHED: 12/03/21 DATE CLOSED:
LICENSE(S) SELF OR COIN OPERATED LAUNDRY
MERCHANDISE - WHEN VENDING PRICE IS .26 CENTS OR MORE MUA21007076 (9-10-2021)
CERTIFICATE OF USE NON RESIDENTIAL

MAILING: 4154 NW 132 ST OPA LOCKA FL 33054
BUSINESS: HUMBERTO MERA MERAMOTOR SPORTS, LLC 4154 NW 132 ST 33054
PHONE: (786) 564-6261 BUSINESS STATUS: Open DATE ESTABLISHED: 12/06/21 DATE CLOSED:
LICENSE(S) AUTO REPAIR SHOP AUTO BODY
CERTIFICATE OF USE NON RESIDENTIAL MUA21007706 (9-30-2021)

MAILING: 5420 NW 200 ST RD MIAMI GARDENS FL 33055
BUSINESS: CRISTIAN AGUILAR VLADIMIR MADAN EVOLUTION WELDINGS AND FABRICATION 2039 NW 141 ST 33054
PHONE: (786) 702-4703 BUSINESS STATUS: Open DATE ESTABLISHED: 12/06/21 DATE CLOSED:
LICENSE(S) MANUFACTURE
CERTIFICATE OF USE NON RESIDENTIAL MUA22000961 (10-28-2021)

MAILING: 1817 OPA LOCKA BLVD OPA LOCKA FL 33054
BUSINESS: DONNA E. MILO DONNA E. MILO, INC 1817 OPA LOCKA BLVD 33054
PHONE: (954) 914-2822 BUSINESS STATUS: Open DATE ESTABLISHED: 12/13/21 DATE CLOSED:
LICENSE(S) STORAGE PER SQ FT
CERTIFICATE OF USE NON RESIDENTIAL MUA22089459 (12-10-2021)

MAILING: 2095 NW 141 ST OPA LOCKA FL 33054
BUSINESS: CRISTIAN AGUILAR VLADIMIR MADAN EVOLUTION WELDINGS & FABRIC 2095 NW 141 ST 33054
PHONE: (786) 702-4703 BUSINESS STATUS: Open DATE ESTABLISHED: 12/13/21 DATE CLOSED:
LICENSE(S) MANUFACTURE
CERTIFICATE OF USE NON RESIDENTIAL MUA22000741 (10-21-2021)

MAILING: 3884 NW 125 ST OPA LOCKA FL 33054
BUSINESS: MIRIAM SOBRADO QUARTZ OF THE WORLD 3884 NW 125 ST 33054
PHONE: (786) 488-9322 BUSINESS STATUS: Open DATE ESTABLISHED: 12/18/21 DATE CLOSED:
LICENSE(S) STORAGE PER SQ FT
BASIC SCHEDULE - RETAIL & WHOLESALE NOT OTHERWISE DEFINED IN FEE SCHEDULE
RENT OFFICE OR SPACE FOR BUSINESS OTHERWISE LICENSED MUA22001231 (11-08-2021)
CERTIFICATE OF USE NON RESIDENTIAL

MAILING: 14925 NW 22 CT OPA-LOCKA FL 33054

SELECTION CRITERIA: cblbusiness.bus_stat='O' AND establish BETWEEN '01/01/2021' AND '12/31/2021'

==========

BUSINESS: JOSE M GUTIERREZEZ BRO BODY SHOP LLC 14925 NW 22 CT 33054
PHONE: (786) 454-0164 BUSINESS STATUS: Open DATE ESTABLISHED: 12/20/21 DATE CLOSED:
LICENSE(S) AUTOMOBILE BODYREPAIR&PAINTING&MECHANICS LIGHT MECHANICS / MECHANIC WORK
CERTIFICATE OF USE NON RESIDENTIAL MUA22089490 (12-12-2021)

==========

MAILING: 3705 NW 123 ST OPA-LOCKA FL 33054
BUSINESS: GLENN S SHAFFREN CONCURRENT GROUP LLC 3705 NW 123 ST 33054
PHONE: (305) 669-5510 BUSINESS STATUS: Open DATE ESTABLISHED: 12/21/21 DATE CLOSED:
LICENSE(S) REPAIR AND SERVICE SHOPS
CERTIFICATE OF USE NON RESIDENTIAL MUA22089639 (12-16-2021)
STORAGE PER SQ FT

==========

MAILING: 2570 NW 141 ST OPA-LOCKA FL 33054
BUSINESS: JOHN A BURGOS RIVERA EMPIRE ENTERPRISES USA CORP 2570 NW 141 ST 33054
PHONE: (305) 515-2577 BUSINESS STATUS: Open DATE ESTABLISHED: 12/21/21 DATE CLOSED:
LICENSE(S) SALE OF AUTO ACCESSORIES
CERTIFICATE OF USE NON RESIDENTIAL MUA22000541 (10-16-2021)
STORAGE PER SQ FT

==========

MAILING: 1100 ALI BABA AVE OPA LOCKA FL 33054
BUSINESS: JUAN FERREIRA DC2WIN INC 1100 ALI BABA AVE 33054
PHONE: (786) 542-5630 BUSINESS STATUS: Open DATE ESTABLISHED: 12/29/21 DATE CLOSED:
LICENSE(S) DRIVE IN - TAKE OUT
CERTIFICATE OF USE NON RESIDENTIAL MUA22000393 (10-12-2021)

==========

TOTAL BUSINESS : 121

EXHIBIT “G”

CITY OF OPA-LOCKA
BUSINESS ESTABLISHMENT INFORMATION

SELECTION CRITERIA: cblbusiness.bus_stat='O' AND establish BETWEEN '01/01/2022' AND '12/31/2022'

MAILING: 2131 NW 139 ST BAY #4 OPA-LOCKA FL 33054
BUSINESS: NELSON ATTIS NELLY AUTO & TRANSPORTATION SVCS CO 2131 NW 139 ST # 4 33054
PHONE: (786) 973-5849 BUSINESS STATUS: Open DATE ESTABLISHED: 01/03/22 DATE CLOSED: ok MUA 22089502
LICENSE(S) STORAGE PER SQ FT
CERTIFICATE OF USE NON RESIDENTIAL
STORAGE PER SQ FT
STORAGE PER SQ FT

MAILING: 14070 NW 20TH AVE OPA LOCKA FL 33054
BUSINESS: GUSTAVO TOMEO GTR MARINE LLC 14070 NW 20TH AVE 33054
PHONE: (786) 862-5264 BUSINESS STATUS: Open DATE ESTABLISHED: 01/06/22 DATE CLOSED: ok MUA 22096211
LICENSE(S) BOAT REPAIR
CERTIFICATE OF USE NON RESIDENTIAL

MAILING: 1805 OPA LOCKA BLVD OPA LOCKA FL 33054
BUSINESS: RYNALDO BORCO BROCO MARINE SERVICE LLC 1805 OPA LOCKA BLVD 33054
PHONE: (786) 514-7299 BUSINESS STATUS: Open DATE ESTABLISHED: 01/10/22 DATE CLOSED: ok MUA 22000813
LICENSE(S) BOAT REPAIR
CERTIFICATE OF USE NON RESIDENTIAL

MAILING: 4162 NW 132 ST OPA-LOCKA FL 33054
BUSINESS: DONOVAN GAYLE CEO GAYLE'S TRUCKING LLC 4162 NW 132 ST 33054
PHONE: (305) 333-0155 BUSINESS STATUS: Open DATE ESTABLISHED: 01/11/22 DATE CLOSED: ok MUA 21003035
LICENSE(S) RENT OFFICE OR SPACE FOR BUSINESS OTHERWISE LICENSED
CERTIFICATE OF USE NON RESIDENTIAL

MAILING: 14270 NW 21 CT OPA LOCKA FL 33054
BUSINESS: JOETTA TAYLOR JOJO SNACK SHOP 14270 NW 21 CT 33054
PHONE: (786) 508-4858 BUSINESS STATUS: Open DATE ESTABLISHED: 01/20/22 DATE CLOSED: No record
LICENSE(S) PEDDLER

MAILING: 3679 NW 135 ST OPA LOCKA FL 33054
BUSINESS: ELRIC PRINCE JR SMOKIN MONKEYS VAPES & APPAREL, LLC 3679 NW 135 ST 33054
PHONE: (786) 409-0625 BUSINESS STATUS: Open DATE ESTABLISHED: 01/21/22 DATE CLOSED: ok MUA 22090147
LICENSE(S) BASIC SCHEDULE - RETAIL & WHOLESALE NOT OTHERWISE DEFINED IN FEE SCHEDULE
CERTIFICATE OF USE NON RESIDENTIAL

MAILING: 12988 NW 42 AVE #122 OPA LOCKA FL 33054
BUSINESS: OSIRIS TRORICOSO ORIS AUTO IMPORT CORP 12988 NW 42 AVE # 122 33054
PHONE: (786) 385-4975 BUSINESS STATUS: Open DATE ESTABLISHED: 01/24/22 DATE CLOSED: ok MUA 22090136
LICENSE(S) AUTO BROKER / VEHICLE SALES
CERTIFICATE OF USE NON RESIDENTIAL

MAILING: 16435 NW 24 AVE OPA LOCKA FL 33054
BUSINESS: JUDY RICHARDS JUDY RICHARDS 16435 NW 24 AVE 33054
PHONE: (786) 906-2167 BUSINESS STATUS: Open DATE ESTABLISHED: 01/26/22 DATE CLOSED: No record
LICENSE(S) PEDDLER

MAILING: 2131 NW 139 ST UNIT 16 OPA LOCKA FL 33054

SELECTION CRITERIA: cblbusiness.bus_stat='O' AND establish BETWEEN '01/01/2022' AND '12/31/2022'

BUSINESS: KIRK M WILLIAMS AMPLIFLY AUTO TINT 2131 NW 139 ST UNIT 16 33054
PHONE: (305) 878-6673 BUSINESS STATUS: Open DATE ESTABLISHED: 01/26/22 DATE CLOSED:
LICENSE(S) AUTOMOBILE BODYREPAIR&PAINTING&MECHANICS LIGHT MECHANICS / MECHANIC WORK
CERTIFICATE OF USE NON RESIDENTIAL
SALE OF AUTO ACCESSORIES

ok MUA 22090015

MAILING: 13837 NW 19 AVE OPA LOCKA FL 33054
BUSINESS: ANGEL MARIO GONZALEZ DIAZ MG REPAIR SERVICES INC 13837 NW 19 AVE 33054
PHONE: (786) 879-4634 BUSINESS STATUS: Open DATE ESTABLISHED: 01/27/22 DATE CLOSED:
LICENSE(S) FOUNDRY MACHINE SHOP, BOILER WORKS, IRON METAL WORKS, MOTOR REPAIR
CERTIFICATE OF USE NON RESIDENTIAL

ok MUA 22089322

MAILING: 4165 NW 132 ST BAY 14 OPA LOCKA FL 33054
BUSINESS: LAZARO B MONTIEL L B M CARPENTER CORP 4165 NW 132 ST BAY 14 33054
PHONE: (786) 397-4346 BUSINESS STATUS: Open DATE ESTABLISHED: 01/27/22 DATE CLOSED:
LICENSE(S) CABINET MAKER OR CARPENTER SHOP
CERTIFICATE OF USE NON RESIDENTIAL

No record

MAILING: 4165 NW 132 ST BAY 21-22 OPA LOCKA FL 33054
BUSINESS: JUAN CARLOS VACCA AMBR THE TROPIC ROT LLC 4165 NW 132 ST BAY 21-22 33054
PHONE: (954) 243-4751 BUSINESS STATUS: Open DATE ESTABLISHED: 01/31/22 DATE CLOSED:
LICENSE(S) COMMERCIAL, PAINTING OR OTHER ART FOR PROFIT WITH NO BLDG PLANS
CERTIFICATE OF USE NON RESIDENTIAL

ok MUA 22089478

MAILING: 2131 NW 132 ST BAY 15 OPA LOCKA FL 33054
BUSINESS: LAVORIS JOHNSON LAVORIS JOHNSON 2131 NW 132 ST BAY 15 33054
PHONE: (754) 244-5235 BUSINESS STATUS: Open DATE ESTABLISHED: 01/31/22 DATE CLOSED:
LICENSE(S) STORAGE PER SQ FT
CERTIFICATE OF USE NON RESIDENTIAL

No record

MAILING: 12994 NW 42 AVE UNIT #128 OPA-LOCKA FL 33054
BUSINESS: GASPARE F AMATO CREATIVE PARTY RENTAL LLC 12994 NW 42 AVE UNIT 128 33054
PHONE: (786) 585-1050 BUSINESS STATUS: Open DATE ESTABLISHED: 02/01/22 DATE CLOSED:
LICENSE(S) STORAGE PER SQ FT
RENT OFFICE OR SPACE FOR BUSINESS OTHERWISE LICENSED
CERTIFICATE OF USE NON RESIDENTIAL

ok MUA 22090260

MAILING: 12949 ALEXANDRIA DR UNIT A OPA LOCKA FL 33054
BUSINESS: JOSUE A TAPIA ARIAS JT EXPORT AUTO PARTS, CORP 12949 ALEXANDRIA DR UNIT A 33054
PHONE: (305) 993-9655 BUSINESS STATUS: Open DATE ESTABLISHED: 02/03/22 DATE CLOSED:
LICENSE(S) AUTO PARTS DEALER
CERTIFICATE OF USE NON RESIDENTIAL
JUNK YARD/JUNK DEALERS,

ok MUA 22090037

MAILING: 13070 CAIRO LANE OPA LOCKA FL 33054
BUSINESS: SAMI A JAMHOUR SAMI AUTO PARTS 13070 CAIRO LN 33054
PHONE: (305) 688-9815 BUSINESS STATUS: Open DATE ESTABLISHED: 02/04/22 DATE CLOSED:
LICENSE(S) JUNK DEALERS,
AUTO PARTS DEALER
CERTIFICATE OF USE NON RESIDENTIAL

old record 02/20/2018
MUA 18001036

SELECTION CRITERIA: cblbusiness.bus_stat='O' AND establish BETWEEN '01/01/2022' AND '12/31/2022'

MAILING: 14930 NW 25 CT OPA-LOCKA FL 33054
BUSINESS: JOSEPH HILL BLISS RESTORATION 14930 NW 25 CT 33054
PHONE: (786) 779-2737 BUSINESS STATUS: Open DATE ESTABLISHED: 02/11/22 DATE CLOSED:
LICENSE(S) RENT OFFICE OR SPACE FOR BUSINESS OTHERWISE LICENSED
STORAGE PER SQ FT
CERTIFICATE OF USE NON RESIDENTIAL

ok MUA 22089899

MAILING: 13412 ASWAN ROAD #107 OPA-LOCKA FL 33054
BUSINESS: MARTIZA GIBSON MARTIZA GIBSON 13412 ASWAN RD # 107 33054
PHONE: (786) 277-9758 BUSINESS STATUS: Open DATE ESTABLISHED: 02/16/22 DATE CLOSED:
LICENSE(S) PEDDLER

~~old record 05/22~~
No record

MAILING: 15060 NW 22 AVE OPA-LOCKA FL 33054
BUSINESS: FRANCOIS THEODORE SYLVIA CAFE SERVICE CATERING 15060 NW 22 AVE 33054
PHONE: (786) 970-7649 BUSINESS STATUS: Open DATE ESTABLISHED: 02/17/22 DATE CLOSED:
LICENSE(S) CATERER OR CATERING SERVICE
CERTIFICATE OF USE NON RESIDENTIAL

pending MUA 21000457
(05/13/2021)

MAILING: 3312 NW 50 ST MIAMI FL 33142
BUSINESS: HERMAN BAIN HERMAN BAIN 3312 NW 50 ST 33142
PHONE: (305) 297-4556 BUSINESS STATUS: Open DATE ESTABLISHED: 02/23/22 DATE CLOSED:
LICENSE(S) MOBILE VENDORS, LUNCH STAND PORTABLE OR MOVING

No record

MAILING: 2275 NW 150 ST OPA LOCKA FL 33054
BUSINESS: RUT E DE LA CRUZ COLLADO AUTO EXPORT CORP 2275 NW 150 ST 33054
PHONE: (305) 231-1382 BUSINESS STATUS: Open DATE ESTABLISHED: 02/28/22 DATE CLOSED:
LICENSE(S) AUTO REPAIR SHOP AUTO BODY
AUTO PARTS DEALER
CERTIFICATE OF USE NON RESIDENTIAL

ok MUA 22090568

MAILING: 1951 NW 141 ST UNIT 28 OPA LOCKA FL 33054
BUSINESS: JOSEPH HALPERN JOSEPH HALPERN 1951 NW 141 ST UNIT 28 33054
PHONE: (954) 534-6501 BUSINESS STATUS: Open DATE ESTABLISHED: 03/02/22 DATE CLOSED:
LICENSE(S) CABINET MAKER OR CARPENTER SHOP
CERTIFICATE OF USE NON RESIDENTIAL
RENT OFFICE OR SPACE FOR BUSINESS OTHERWISE LICENSED

ok MUA 22091041

MAILING: 4165 NW 132 ST BAY N OPA LOCKA FL 33054
BUSINESS: LAZARO PULIDO R.D.L. PRESTIGE LLC 4165 NW 132 ST N BAY 33054
PHONE: (786) 362-1198 BUSINESS STATUS: Open DATE ESTABLISHED: 03/02/22 DATE CLOSED:
LICENSE(S) STORAGE PER SQ FT
CERTIFICATE OF USE NON RESIDENTIAL

ok MUA 22090979

MAILING: 2339 NW 150 ST OPA-LOCKA FL 33054
BUSINESS: YEVGENIY TEREKHIN AUTOPRIME FL, INC. 2339 NW 150 ST 33054
PHONE: (954) 849-4645 BUSINESS STATUS: Open DATE ESTABLISHED: 03/09/22 DATE CLOSED:
LICENSE(S) STORAGE PER SQ FT
CERTIFICATE OF USE NON RESIDENTIAL

ok MUA 21006538

SELECTION CRITERIA: cblbusiness.bus_stat='O' AND establish BETWEEN '01/01/2022' AND '12/31/2022'

MAILING: 1001 SALIH ST OPA-LOCKA FL 33054
BUSINESS: DENISE LEE BUBBLE GUM'S CREATIONS LLC 1001 SALIH ST 33054
PHONE: (305) 490-3658 BUSINESS STATUS: Open DATE ESTABLISHED: 03/14/22 DATE CLOSED:
LICENSE(S) PACKER AND SHIPPER, PACKING HOUSES
CERTIFICATE OF USE RESIDENTIAL
No record

MAILING: 3875 NW 132 ST OPA-LOCKA FL 33054
BUSINESS: LIVAN CARDOSO A-1 HEAVY EQUIPMENT CORP. 3875 NW 132 ST 33054
PHONE: (786) 302-6524 BUSINESS STATUS: Open DATE ESTABLISHED: 03/14/22 DATE CLOSED:
LICENSE(S) REPAIR AND SERVICE SHOPS
STORAGE PER SQ FT
CERTIFICATE OF USE NON RESIDENTIAL
ok MUA 22091262

MAILING: 2111 NW 139 ST UNIT 21 OPA LOCKA FL 33054
BUSINESS: BRANDON PETIT BMP ENTERPRIESES, INC 2111 NW 139 ST UNIT 21 33054
PHONE: (954) 393-8010 BUSINESS STATUS: Open DATE ESTABLISHED: 03/16/22 DATE CLOSED:
LICENSE(S) STORAGE PER SQ FT
CERTIFICATE OF USE RESIDENTIAL
CERTIFICATE OF USE NON RESIDENTIAL
ok MUA 22089970

MAILING: 2111 NW 139 ST UNIT 19 OPA LOCKA FL 33054
BUSINESS: BRANDON PETIT BMP ENTERPRISES, INC 2111 NW 139 ST UNIT 19 33054
PHONE: (954) 393-8010 BUSINESS STATUS: Open DATE ESTABLISHED: 03/16/22 DATE CLOSED:
LICENSE(S) STORAGE PER SQ FT
CERTIFICATE OF USE NON RESIDENTIAL
ok MUA 22001498

MAILING: 13700 NW 19 AVE UNIT 11 OPA LOCKA FL 33054
BUSINESS: JULIAN M RIVERA PAUL H BUTLER PEACEFUL PAWS MEMORIL SERVICE, LLC 13700 NW 19 AVE UNIT 11 33054
PHONE: (786) 673-7297 BUSINESS STATUS: Open DATE ESTABLISHED: 03/22/22 DATE CLOSED:
LICENSE(S) FUNERAL HOMES
CERTIFICATE OF USE NON RESIDENTIAL
ok MUA 22089471

MAILING: 3820 NW 135 ST BAY N-O OPA LOCKA FL 33054
BUSINESS: JULIO CESAR ROA ARIZA ROA AUTO PARTS SOLUTIONS & MORE LLC 3820 NW 135 ST BAY N-O 33054
PHONE: (786) 907-1747 BUSINESS STATUS: Open DATE ESTABLISHED: 03/23/22 DATE CLOSED:
LICENSE(S) AUTO REPAIR SHOP AUTO BODY
CERTIFICATE OF USE NON RESIDENTIAL
ok MUA 22091386

MAILING: 2155 OPA LOCKA BLVD OPA LOCKA FL 33054
BUSINESS: YAIMARA BENITEZ BRIAN APPLIANCES SERIVCES 2155 OPA LOCKA BLVD 33054
PHONE: (305) 762-2247 BUSINESS STATUS: Open DATE ESTABLISHED: 04/01/22 DATE CLOSED:
LICENSE(S) REPAIR AND SERVICE SHOPS
CERTIFICATE OF USE NON RESIDENTIAL
ok MUA 22090197

MAILING: 2123 OPA LOCKA BLVD OPA LOCKA FL 33054
BUSINESS: ANNA GRITSKEVICH USA BEST DEAL LLC 2123 OPA LOCKA BLVD 33054
PHONE: (305) 343-6074 BUSINESS STATUS: Open DATE ESTABLISHED: 04/04/22 DATE CLOSED:
LICENSE(S) BASIC SCHEDULE - RETAIL & WHOLESALE NOT OTHERWISE DEFINED IN FEE SCHEDULE
ok MUA 22091955

SELECTION CRITERIA: cblbusiness.bus_stat='O' AND establish BETWEEN '01/01/2022' AND '12/31/2022'

STORAGE PER SQ FT
CERTIFICATE OF USE NON RESIDENTIAL

MAILING: 2131 NW 139 ST OPA LOCKA FL 33054
BUSINESS: JOSE VEGA COASTAL CONTAINER TRANSPORT INC. 2131 NW 139 ST BAY 22 33054
PHONE: (786) 229-7148 BUSINESS STATUS: Open DATE ESTABLISHED: 04/04/22 DATE CLOSED:
LICENSE(S) BASIC SCHEDULE - RETAIL & WHOLESALE NOT OTHERWISE DEFINED IN FEE SCHEDULE
CERTIFICATE OF USE NON RESIDENTIAL
ok MUA 22090144

MAILING: 4480 NW 128 ST OPA LOCKA FL 33054
BUSINESS: MEARS HOLDING LLC MEARS GROUP INC 4480 NW 128 ST 33054
PHONE: (786) 431-5805 BUSINESS STATUS: Open DATE ESTABLISHED: 04/04/22 DATE CLOSED:
LICENSE(S) RENT OFFICE OR SPACE FOR BUSINESS OTHERWISE LICENSED
CERTIFICATE OF USE NON RESIDENTIAL
ok MUA 22092685

MAILING: 379 OPA LOCKA OPA LOCKA FL 33054
BUSINESS: NERLY GONZALZ NERLYS STORE 379 OPA LOCKA 33054
PHONE: (786) 690-4014 BUSINESS STATUS: Open DATE ESTABLISHED: 04/06/22 DATE CLOSED:
LICENSE(S) BASIC SCHEDULE - RETAIL & WHOLESALE NOT OTHERWISE DEFINED IN FEE SCHEDULE
CERTIFICATE OF USE NON RESIDENTIAL
ok MUA 22090441

MAILING: 4165 NW 132 ST BAY M OPA LOCKA FL 33054
BUSINESS: ROXANA AGUILA XOR MIAMI, LLC 4165 NW 132 ST BAY M 33054
PHONE: (754) 204-8706 BUSINESS STATUS: Open DATE ESTABLISHED: 04/07/22 DATE CLOSED:
LICENSE(S) MANUFACTURE
CERTIFICATE OF USE NON RESIDENTIAL
ok MUA 22090979

MAILING: 12881 PORT SAID RD OPA LOCKA FL 33054
BUSINESS: MAIRELYS VALDES ESPINOSA RASTRO MR USED AUTO PARTS LLC 12881 PORT SAID RD 33054
PHONE: (786) 393-2203 BUSINESS STATUS: Open DATE ESTABLISHED: 04/08/22 DATE CLOSED:
LICENSE(S) JUNK YARD/JUNK DEALERS,
AUTO PARTS DEALER
CERTIFICATE OF USE NON RESIDENTIAL
ok MUA 22091910

MAILING: 2450 NW 151 ST OPA LOCKA FL 33054
BUSINESS: EUGENIO URIARTE BLACKWATER SPORTFISHING BOATS INC 2450 NW 151 ST 33054
PHONE: (786) 853-0618 BUSINESS STATUS: Open DATE ESTABLISHED: 04/11/22 DATE CLOSED:
LICENSE(S) STORAGE PER SQ FT
CERTIFICATE OF USE NON RESIDENTIAL
ok MUA 22092635

MAILING: 2061 NW 141 ST OPA LOCKA FL 33054
BUSINESS: PEDRO M GUILARTE RODRIGUEZ PEDRO BODYSHOP CORP 2061 NW 141 ST 33054
PHONE: (786) 286-4179 BUSINESS STATUS: Open DATE ESTABLISHED: 04/12/22 DATE CLOSED:
LICENSE(S) AUTOMOBILE BODYREPAIR&PAINTING&MECHANICS LIGHT MECHANICS / MECHANIC WORK
CERTIFICATE OF USE NON RESIDENTIAL
ok MUA 22091882

MAILING: 2121 NW 139 ST UNIT 7 OPA LOCKA FL 33054
BUSINESS: ALBERTO ALMY ALBERTO ALMY 2121 NW 139 ST UNIT 7 33054
PHONE: (305) 879-0320 BUSINESS STATUS: Open DATE ESTABLISHED: 04/14/22 DATE CLOSED:

SELECTION CRITERIA: cblbusiness.bus_stat='O' AND establish BETWEEN '01/01/2022' AND '12/31/2022'

LICENSE(S) STORAGE PER SQ FT
CERTIFICATE OF USE NON RESIDENTIAL

MAILING: 3830 NW 187 ST MIAMI GARDENS FL 33055
BUSINESS: PIERRE RUIZ J MOBILE DETAILING 3830 NW 187 ST 33055
PHONE: (947) 467-5587 BUSINESS STATUS: Open DATE ESTABLISHED: 04/20/22 DATE CLOSED:
LICENSE(S) PEDDLER
No record

MAILING: 13081 NW 43 AVE OPA LOCKA FL 33054
BUSINESS: JORGE MARTELL PREMIUM BUILDING CONTRACTORS INC 13081 NW 43 AVE # 6 33054
PHONE: (305) 970-2490 BUSINESS STATUS: Open DATE ESTABLISHED: 04/21/22 DATE CLOSED:
LICENSE(S) RENT OFFICE OR SPACE FOR BUSINESS OTHERWISE LICENSED
STORAGE PER SQ FT
CERTIFICATE OF USE NON RESIDENTIAL
ok MUA22096308

MAILING: 4660 NW 133 ST OPA LOCKA FL 33054
BUSINESS: GERARD BENENY TRIPLE G COURIER SERVICES 4660 NW 133 ST 33054
PHONE: (786) 536-6125 BUSINESS STATUS: Open DATE ESTABLISHED: 04/25/22 DATE CLOSED:
LICENSE(S) STORAGE PER SQ FT
CERTIFICATE OF USE NON RESIDENTIAL
ok MUA 22090041

MAILING: 2340 NW 147 ST BAY A OPA LOCKA FL 33054
BUSINESS: AHARON RAFELOVE SUPERIOR RECYCLING & WASTE MANAGE 2340 NW 147 ST BAY A 33054
PHONE: (305) 725-4401 BUSINESS STATUS: Open DATE ESTABLISHED: 04/25/22 DATE CLOSED:
LICENSE(S) TRUCKING & WAREHOUSING
CERTIFICATE OF USE NON RESIDENTIAL
No record

MAILING: 1725 OPA LOCKA BLVD OPA LOCKA FL 33054
BUSINESS: ANDRES J ARCELAY ARCELAYS FUNERAL SERVICES LLC 1725 OPA LOCKA BLVD 33054
PHONE: (786) 370-3227 BUSINESS STATUS: Open DATE ESTABLISHED: 04/26/22 DATE CLOSED:
LICENSE(S) STORAGE PER SQ FT
CERTIFICATE OF USE NON RESIDENTIAL
ok MUA 22001318

MAILING: 2275 NW 150 ST UNIT A-B OPA LOCKA FL 33054
BUSINESS: MICHAEL FLORES MICHAEL'S BOAT REPAIR INC 2275 NW 150 ST UNIT A-B 33054
PHONE: (305) 303-6170 BUSINESS STATUS: Open DATE ESTABLISHED: 04/28/22 DATE CLOSED:
LICENSE(S) BOAT REPAIR
CERTIFICATE OF USE NON RESIDENTIAL
ok MUA 22090431

MAILING: 4147 NW 135 ST OPA LOCKA FL 33054
BUSINESS: SERGIO GALBAN SERGIO GALBAN 4147 NW 135 ST 33054
PHONE: (786) 878-3950 BUSINESS STATUS: Open DATE ESTABLISHED: 04/29/22 DATE CLOSED:
LICENSE(S) PEDDLER
ok MUA 23002358

MAILING: 3821 NW 135 ST BAY A OPA LOCKA FL 33054
BUSINESS: YANETH JIMENEZ ALL DIESEL TRUCKS AND PARTS LLC 3821 NW 135 ST BAY A 33054
PHONE: (786) 554-9170 BUSINESS STATUS: Open DATE ESTABLISHED: 05/06/22 DATE CLOSED:
LICENSE(S) BASIC SCHEDULE - RETAIL & WHOLESALE NOT OTHERWISE DEFINED IN FEE SCHEDULE
CERTIFICATE OF USE NON RESIDENTIAL
ok MUA 21006933

SELECTION CRITERIA: cblbusiness.bus_stat='O' AND establish BETWEEN '01/01/2022' AND '12/31/2022'

MAILING: 13760 NW 19 AVE BAY 6 OPA LOCKA FL 33054
BUSINESS: JULIAN VARGAS MORENO MR. CLEAN'S MULTISERVICE INC 13760 NW 19 AVE BAY 6 33054
PHONE: (786) 855-0898 BUSINESS STATUS: Open DATE ESTABLISHED: 05/06/22 DATE CLOSED: ok MUA22092424
LICENSE(S) STORAGE PER SQ FT
CERTIFICATE OF USE NON RESIDENTIAL

MAILING: 2030 OPA LOCKA BLVD OPA-LOCKA FL 33054
BUSINESS: DARNEISHA BRYANT PINK STAR BANQUET HALL LLC 2030 OPA LOCKA BLVD 33054
PHONE: (786) 382-7021 BUSINESS STATUS: Open DATE ESTABLISHED: 05/12/22 DATE CLOSED: ok MUA21006923
LICENSE(S) DANCE HALL OR BALLROOM - NO FOOD
CERTIFICATE OF USE NON RESIDENTIAL

MAILING: 14671 NW 27 AVE OPA LOCKA FL 33054
BUSINESS: JORGE ALIAGA GUTIERREZ J & B GARAGE INC 14671 NW 27 AVE 33054
PHONE: (956) 509-8882 BUSINESS STATUS: Open DATE ESTABLISHED: 05/20/22 DATE CLOSED: ok MUA22091227
LICENSE(S) AUTO REPAIR SHOP AUTO BODY
CERTIFICATE OF USE NON RESIDENTIAL

MAILING: 12707 NW 42 AVE OPA LOCKA FL 33054
BUSINESS: GEORGIA REGALOS GREEK FOODS SPECIALTY INC 12707 NW 42 AVE 33054
PHONE: (954) 924-9890 BUSINESS STATUS: Open DATE ESTABLISHED: 05/23/22 DATE CLOSED:
LICENSE(S) DOES NOT STOCK MERCHANDISE BUT ORDERS FOR CUSTOMERS ONLY
RENT OFFICE OR SPACE FOR BUSINESS OTHERWISE LICENSED
STORAGE PER SQ FT
CERTIFICATE OF USE NON RESIDENTIAL ok MUA22001346

MAILING: 14925 NW 22 CT OPA LOCKA FL 33054
BUSINESS: MIGUEL MCKAY MIGUEL MCKAY 14925 NW 22 CT 33054
PHONE: (561) 275-0115 BUSINESS STATUS: Open DATE ESTABLISHED: 05/23/22 DATE CLOSED: ok MUA22089490
LICENSE(S) PEDDLER

MAILING: 3875 NW 132 ST OPA LOCKA FL 33054
BUSINESS: CARLOS R MONGE CM MACHINESHOP INC 3875 NW 132 ST 33054
PHONE: (305) 205-7631 BUSINESS STATUS: Open DATE ESTABLISHED: 05/23/22 DATE CLOSED: ok MUA22092167
LICENSE(S) FURNITURE MANUFACTURING
CERTIFICATE OF USE NON RESIDENTIAL

MAILING: 4090 NW 132 ST UNIT K-P OPA LOCKA FL 33054
BUSINESS: JOSE REYS* SHADES & DRAPERY DESIGN LLC 4090 NW 132 ST UNIT K-P 33054
PHONE: (305) 769-1110 BUSINESS STATUS: Open DATE ESTABLISHED: 05/23/22 DATE CLOSED: ok MUA22093088
LICENSE(S) STORAGE PER SQ FT
CERTIFICATE OF USE NON RESIDENTIAL

MAILING: 14960/14970 NW 22 AVE OPA LOCKA FL 33054
BUSINESS: MISLIN BURGOS SLEEP DEEP MATTRESSES CORP 22 NW 14960/14970 AVE 33054
PHONE: (786) 486-5008 BUSINESS STATUS: Open DATE ESTABLISHED: 05/27/22 DATE CLOSED:
LICENSE(S) BASIC SCHEDULE - RETAIL & WHOLESALE NOT OTHERWISE DEFINED IN FEE SCHEDULE
CERTIFICATE OF USE NON RESIDENTIAL

SELECTION CRITERIA: cblbusiness.bus_stat='O' AND establish BETWEEN '01/01/2022' AND '12/31/2022'

MAILING: 14935 NW 27TH AVE OPA LOCKA FL 33054
BUSINESS: JAKE MYARA TWO SCENTS LLC 14935 NW 27 AVE 33054
PHONE: (954) 305-8524 BUSINESS STATUS: Open DATE ESTABLISHED: 05/31/22 DATE CLOSED:
LICENSE(S) MERCHANT-RETAIL OR WHOLESALE
CERTIFICATE OF USE NON RESIDENTIAL
ok MUA22091873

MAILING: 4168 NW 132 ST OPA LOCKA FL 33054
BUSINESS: CLAUDIA KYA TITLE AND LIEN SERVICES 4168 NW 132 ST 33054
PHONE: (305) 305-4707 BUSINESS STATUS: Open DATE ESTABLISHED: 06/02/22 DATE CLOSED:
LICENSE(S) STORAGE PER SQ FT
CERTIFICATE OF USE NON RESIDENTIAL
ok MUA22093092

MAILING: 2121 NW 139 ST BAY 05 OPA LOCKA FL 33054
BUSINESS: FRANK M FALESTRA FRANK M FALETRA 2121 NW 139 ST BAY 05 33054
PHONE: (305) 992-7108 BUSINESS STATUS: Open DATE ESTABLISHED: 06/07/22 DATE CLOSED:
LICENSE(S) STORAGE PER SQ FT
CERTIFICATE OF USE NON RESIDENTIAL
ok MUA22093551

MAILING: 701 OPA LOCKA BLVD OPA LOCKA FL 33054
BUSINESS: JULIO F CASTRO THESPOT 701 701 OPA LOCKA BLVD 33054
PHONE: (305) 987-1272 BUSINESS STATUS: Open DATE ESTABLISHED: 06/08/22 DATE CLOSED:
LICENSE(S) GROCERY
CERTIFICATE OF USE NON RESIDENTIAL
ok MUA22093456

MAILING: 14471 NW 27 AVE OPA LOCKA FL 33054
BUSINESS: ISMAEL MESA ALEXA TIRES & REPAIRS INC 14471 NW 27 AVE 33054
PHONE: (786) 468-3454 BUSINESS STATUS: Open DATE ESTABLISHED: 06/10/22 DATE CLOSED:
LICENSE(S) SERVICE AND REPAIR
CERTIFICATE OF USE NON RESIDENTIAL
ok MUA22090027

MAILING: 2099 NW 141 ST OPA LOCKA FL 33054
BUSINESS: ALMOG GOBAY IWA INTERNATIONAL INC 2099 NW 141 ST 33054
PHONE: (401) 714-3375 BUSINESS STATUS: Open DATE ESTABLISHED: 06/14/22 DATE CLOSED:
LICENSE(S) STORAGE PER SQ FT
CERTIFICATE OF USE NON RESIDENTIAL
ok MUA22093486

MAILING: 14508 NW 27 AVE OPA LOCKA FL 33054
BUSINESS: RAYNETTE BURKE OPULENCE BEAUTY ACADEMY 14508 NW 27 AVE 33054
PHONE: (786) 486-9507 BUSINESS STATUS: Open DATE ESTABLISHED: 06/15/22 DATE CLOSED:
LICENSE(S) PRIVATE, FOR PROFIT
CERTIFICATE OF USE NON RESIDENTIAL
ok MUA22093294

MAILING: 2344 NW 147 ST OPA LOCKA FL 33054
BUSINESS: LUCKSON FELIX SUNLIFE OIL & DELIVERIES INC 2344 NW 147 ST 33054
PHONE: (786) 506-3592 BUSINESS STATUS: Open DATE ESTABLISHED: 06/22/22 DATE CLOSED: ok MUA22092714
LICENSE(S) STORAGE PER SQ FT
CERTIFICATE OF USE NON RESIDENTIAL

SELECTION CRITERIA: cblbusiness.bus_stat='O' AND establish BETWEEN '01/01/2022' AND '12/31/2022'

MAILING: 4080 NW 132 ST BAY O & P OPA LOCKA FL 33054
BUSINESS: YENIFER DAGER MOLERO EL CRISOLY CAFE LLC 4080 NW 132 ST BAY O & 33054
PHONE: (786) 675-1443 BUSINESS STATUS: Open DATE ESTABLISHED: 06/28/22 DATE CLOSED: ok MUA 22094170
LICENSE(S) STORAGE PER SQ FT
CERTIFICATE OF USE NON RESIDENTIAL

MAILING: 1920 NW 151 ST OPA LOCKA FL 33054
BUSINESS: SEBASTIAN PANICK LIBERTY 11 LLC 1920 NW 151 ST 33054
PHONE: (786) 773-4997 BUSINESS STATUS: Open DATE ESTABLISHED: 07/08/22 DATE CLOSED:
LICENSE(S) CERTIFICATE OF USE RESIDENTIAL
HOME OFFICE/HOME OCCUPATION ok MUA 22094265

MAILING: 3121 NW 133 ST OPA LOCKA FL 33054
BUSINESS: SEBASTIAN PANICK ELU LLC 3121 NW 133 ST 33054
PHONE: (786) 773-4997 BUSINESS STATUS: Open DATE ESTABLISHED: 07/08/22 DATE CLOSED:
LICENSE(S) CERTIFICATE OF USE RESIDENTIAL
HOME OFFICE/HOME OCCUPATION ok MUA 22094303

MAILING: 13700 NW 19 AVE OPA LOCKA FL 33054
BUSINESS: RICARDO HERRERO INTERNATIONAL PACKING SOLUTIONS 13700 NW 19 AVE UNIT 16 33054
PHONE: (305) 857-7003 BUSINESS STATUS: Open DATE ESTABLISHED: 07/11/22 DATE CLOSED: ok MUA 22094384
LICENSE(S) STORAGE PER SQ FT
CERTIFICATE OF USE NON RESIDENTIAL

MAILING: 2300 NW 136 ST OPA LOCKA FL 33054
BUSINESS: PENINSULA HOUSING DEVELOPMENT PENINSULA HOUSING DEVELOPMENT 2300 NW 136 ST 33054
PHONE: (305) 642-3634 BUSINESS STATUS: Open DATE ESTABLISHED: 07/13/22 DATE CLOSED: ok MUA 22094276
LICENSE(S) APARTMENTS WITH ONE BEDROOM
CERTIFICATE OF USE RESIDENTIAL

MAILING: 3890 NW 132 ST #A & B OPA LOCKA FL 33054
BUSINESS: MIGUEL MARQUEZ M & M CUSTOM DESIGN LLC 3890 NW 132 ST # A 33054
PHONE: (305) 450-6943 BUSINESS STATUS: Open DATE ESTABLISHED: 07/14/22 DATE CLOSED:
LICENSE(S) CABINET MAKER OR CARPENTER SHOP
CERTIFICATE OF USE NON RESIDENTIAL ok MUA 22091738

MAILING: 14735 NW 22ND CT OPALOCKA FL 33054
BUSINESS: MICHEL DE LOS SANTOS FRANCOIS VISION BODY SHOP 14735 NW 22 CT 33054
PHONE: (756) 777-1378 BUSINESS STATUS: Open DATE ESTABLISHED: 07/19/22 DATE CLOSED: ok MUA 22091911
LICENSE(S) AUTO REPAIR SHOP AUTO BODY
CERTIFICATE OF USE NON RESIDENTIAL

MAILING: 13140 NW 45TH AVE OPALOCKA FL 33054
BUSINESS: EDWARD DAVID BOOTHMAN STS RECYCLINGS LLC 13140 NW 45 AVE 33054
PHONE: (305) 322-9756 BUSINESS STATUS: Open DATE ESTABLISHED: 07/27/22 DATE CLOSED: ok MUA 22093837
LICENSE(S) RECYCLING COMPANY OUT OF CITY
CERTIFICATE OF USE NON RESIDENTIAL
STORAGE PER SQ FT

SELECTION CRITERIA: cblbusiness.bus_stat='O' AND establish BETWEEN '01/01/2022' AND '12/31/2022'

MAILING: 12960 NW 42 AVE UNIT #97 OPA LOCKA FL 33054
BUSINESS: ALEJANDRO VIDALES VIDALES AUTO REPAIR CORP 12960 NW 42 AVE UNIT 97 33054
PHONE: (786) 253-3507 BUSINESS STATUS: Open DATE ESTABLISHED: 07/28/22 DATE CLOSED: ok MUA22093120
LICENSE(S) AUTO REPAIR SHOP AUTO BODY
CERTIFICATE OF USE NON RESIDENTIAL

MAILING: 4164 NW 132 STREET OPA LOCKA FL 33054
BUSINESS: JOSE RAMON CABALLERO CASTRO JOSEMAR SERVICE CORP 4164 NW 132 ST 33054
PHONE: (305) 769-1110 BUSINESS STATUS: Open DATE ESTABLISHED: 07/29/22 DATE CLOSED: ok MUA22089948
LICENSE(S) STORAGE PER SQ FT
CERTIFICATE OF USE NON RESIDENTIAL

MAILING: 4480 NW 128 ST OPA LOCKA FL 33054
BUSINESS: JACIEL GARCIA HERNANDEZ A & J TRAILER 4480 NW ST RD 128 33054
PHONE: (786) 930-9251 BUSINESS STATUS: Open DATE ESTABLISHED: 08/10/22 DATE CLOSED: ok MUA22092685
LICENSE(S) AUTO REPAIR SHOP AUTO BODY
CERTIFICATE OF USE NON RESIDENTIAL

MAILING: 3907 NW 135 ST OPA LOCKA FL 33054
BUSINESS: SANDRA REUS SUNSHINE REAL ESTATE HOLDINGS 3907 NW 135 ST 33054
PHONE: (305) 447-5800 BUSINESS STATUS: Open DATE ESTABLISHED: 08/10/22 DATE CLOSED:
LICENSE(S) GASOLINE SALES
CERTIFICATE OF USE NON RESIDENTIAL No record

MAILING: 2111 NW 139 ST UNIT 11 OPA LOCKA FL 33054
BUSINESS: ELMER LOREDO LOREDO INTERNATIONAL LLC 2111 NW 139 ST UNIT 11 33054
PHONE: (786) 636-0088 BUSINESS STATUS: Open DATE ESTABLISHED: 08/10/22 DATE CLOSED: ok MUA22089471
LICENSE(S) CERTIFICATE OF USE NON RESIDENTIAL
STORAGE PER SQ FT

MAILING: 1710 NW 151 ST OPA LOCKA FL 33054
BUSINESS: DAVIDE BROMLEY DAVIDE BROMLEY 1710 NW 151 ST 33054
PHONE: (305) 301-2112 BUSINESS STATUS: Open DATE ESTABLISHED: 08/12/22 DATE CLOSED: pending MUA2200070
LICENSE(S) PINBALL, AND THE LIKE
CERTIFICATE OF USE NON RESIDENTIAL

MAILING: 14061 NW 20 CT OPA LOCKA FL 33054
BUSINESS: MARIA E HERNANDEZ TORRES AUTO COLLISION CORP 14061 NW 20 CT 33054
PHONE: (954) 258-7384 BUSINESS STATUS: Open DATE ESTABLISHED: 08/12/22 DATE CLOSED: ok MUA22094148
LICENSE(S) AUTOMOBILE BODYREPAIR&PAINTING&MECHANICS LIGHT MECHANICS / MECHANIC WORK
CERTIFICATE OF USE NON RESIDENTIAL

MAILING: 2350 ALI BABA AVE OPA LOCKA FL 33054
BUSINESS: JUAN M MELENDEZ EXIT 95 AUTO ENTERPRISES INC 2350 ALI BABA AVE 33054
PHONE: (786) 295-3373 BUSINESS STATUS: Open DATE ESTABLISHED: 08/15/22 DATE CLOSED: ok MUA22091441
LICENSE(S) AUTO REPAIR SHOP AUTO BODY
CERTIFICATE OF USE NON RESIDENTIAL

SELECTION CRITERIA: cblbusiness.bus_stat='O' AND establish BETWEEN '01/01/2022' AND '12/31/2022'

MAILING: 391 OPA LOCKA BLVD UNIT #367 OPA LOCKA FL 33054
BUSINESS: DEBBE LOUISSAINT COME GET SOME FITNESS LLC 367 OPA LOCKA BLVD 33054
PHONE: BUSINESS STATUS: Open DATE ESTABLISHED: 08/18/22 DATE CLOSED:
LICENSE(S) HEALTH LECTURES
CERTIFICATE OF USE NON RESIDENTIAL

ok MUA 22089881

MAILING: 4151-4153 NW 132 ST OPA LOCKA FL 33054
BUSINESS: ALFREDO DIAZ ALFREDO D APPLIANCE CORP 4151 NW 132 ST 33054
PHONE: (786) 515-7005 BUSINESS STATUS: Open DATE ESTABLISHED: 08/19/22 DATE CLOSED:
LICENSE(S) STORAGE PER SQ FT
REPAIR AND SERVICE SHOPS
CERTIFICATE OF USE NON RESIDENTIAL

ok MUA 23000521

MAILING: 2275 NW 150 ST SUITE C&D OPA LOCKA FL 33054
BUSINESS: JOSE RIVERO JC ENTERPRISE EST LLC 2275 NW 150 ST STE C&D 33054
PHONE: (305) 308-2153 BUSINESS STATUS: Open DATE ESTABLISHED: 08/22/22 DATE CLOSED:
LICENSE(S) STORAGE PER SQ FT
CERTIFICATE OF USE NON RESIDENTIAL

ok MUA 22095006

MAILING: 250 EAST DRIVE NORTH MIAMI BEACH FL 33162
BUSINESS: JONATHAN BANKS JONATHAN BANKS 13950 NW 27 AVE 33054
PHONE: (904) 520-2719 BUSINESS STATUS: Open DATE ESTABLISHED: 08/25/22 DATE CLOSED:
LICENSE(S) PEDDLER

old record (9/15/21)
MUA 21009179

MAILING: 14500 NW 27 AVE OPA LOCKA FL 33054
BUSINESS: DENAYA BULLARD 5K FISH FRY N SEAFOOD LLC 14500 NW 27 AVE 33054
PHONE: (305) 915-6527 BUSINESS STATUS: Open DATE ESTABLISHED: 09/01/22 DATE CLOSED:
LICENSE(S) FISH, OYSTERS, OTHER SEA FOOD, POULTRY RETAIL OR WHOLESALE
DRIVE IN - TAKE OUT
CERTIFICATE OF USE NON RESIDENTIAL

ok MUA22094913

MAILING: 321 OPA LOCKA BLVD OPA LOCKA FL 33054
BUSINESS: YANARA GALAN CHARLON NURSE PRACTICIONER YANARA GALAN CHARLON DBA COMMUNITY 321 OPA LOCKA BLVD 33054
PHONE: (786) 476-3333 BUSINESS STATUS: Open DATE ESTABLISHED: 09/08/22 DATE CLOSED:
LICENSE(S) D.C. - D.D.S.- M.D. - N.D. - D.S.C., OTHER

old record (9/27/21)
MUA 21009589

MAILING: 4174 NW 132 ST OPA LOCKA FL 33054
BUSINESS: PABLO VILADRICH LRV ONE DESIGN ONC 4174 NW 132 ST 33054
PHONE: (305) 769-1110 BUSINESS STATUS: Open DATE ESTABLISHED: 09/14/22 DATE CLOSED:
LICENSE(S) STORAGE PER SQ FT
CABINET MAKER OR CARPENTER SHOP
CERTIFICATE OF USE NON RESIDENTIAL

ok MUA 22094915

MAILING: 3947 OSPREY CT WESTON FL 33331
BUSINESS: JORGE PRADILLA TROPIC OIL COMPANY LLC 3860 NW 135 ST 33331
PHONE: (305) 884-0008 BUSINESS STATUS: Open DATE ESTABLISHED: 09/14/22 DATE CLOSED:
LICENSE(S) GASOLINE SALES
CONVENIENCE STORES
CAR WASH
CERTIFICATE OF USE NON RESIDENTIAL

ok MUA 22090806

SELECTION CRITERIA: cblbusiness.bus_stat='O' AND establish BETWEEN '01/01/2022' AND '12/31/2022'

MAILING: 4085-4087 NW 135 ST OPA LOCKA FL 33054
BUSINESS: VICTOR R FRANCISCO A & R FURNITURE 4085 NW 135 ST 33054
PHONE: (786) 474-1607 BUSINESS STATUS: Open DATE ESTABLISHED: 09/15/22 DATE CLOSED: ok MUA22094753
LICENSE(S) FURNITURE SALES
CERTIFICATE OF USE NON RESIDENTIAL

MAILING: 2190 ALI BABA AVE OPA LOCKA FL 33054
BUSINESS: ROBERT GOINS VENDING LLC ROBERT GOINS VENDING LLC 2190 ALI BABA AVE 33054
PHONE: (954) 270-4658 BUSINESS STATUS: Open DATE ESTABLISHED: 09/27/22 DATE CLOSED: No record
LICENSE(S) ARCADE, VIDEO GAMES, AND OTHER AMUSEMENT DEVICES

MAILING: 13051 PORT SAID RD UNIT 7 OPA LOCKA FL 33054
BUSINESS: EDDY J GARCIA E G TRANSMISSION CORP 13091 PORT SAID RD UNIT 7 33054
PHONE: (786) 226-1130 BUSINESS STATUS: Open DATE ESTABLISHED: 10/04/22 DATE CLOSED:
LICENSE(S) AUTO REPAIR SHOP AUTO BODY
STORAGE PER SQ FT
CERTIFICATE OF USE NON RESIDENTIAL ok MUA23000138

MAILING: 17701 SW 176 ST MIAMI FL 33187
BUSINESS: ALFREDO GARCIA K & K TRANSMISSION & REPAIR INC 2370 NW 149 ST 33054
PHONE: (305) 431-2480 BUSINESS STATUS: Open DATE ESTABLISHED: 10/07/22 DATE CLOSED: ok MUA22093979
LICENSE(S) REPAIR AND SERVICE SHOPS
CERTIFICATE OF USE NON RESIDENTIAL

MAILING: 844 SW 1 ST MIAMI FL 33130
BUSINESS: LAKEVIEW APARTENTS LLC LAKEVIEW APARTMENTS LLC 2405 NW 2407 135 ST 33054
PHONE: (305) 834-1057 BUSINESS STATUS: Open DATE ESTABLISHED: 10/13/22 DATE CLOSED: ok MUA22090761
LICENSE(S) APARTMENTS WITH TWO BEDROOMS
CERTIFICATE OF USE RESIDENTIAL

MAILING: 13449 NW 42 AVE 89 OPA LOCKA FL 33054
BUSINESS: ALFREDO ONTIVERO ONTIVERO'S JEWELRY II INC 13449 NW 42 AVE 89 33054
PHONE: (786) 444-9916 BUSINESS STATUS: Open DATE ESTABLISHED: 10/25/22 DATE CLOSED:
LICENSE(S) REPAIR
CERTIFICATE OF USE NON RESIDENTIAL ok MUA22096089

MAILING: 2335 SUPERIOR ST OPA LOCKA FL 33054
BUSINESS: MARCUS SMALL MARCUS SMALL 2335 SUPERIOR ST 33054
PHONE: (954) 300-9702 BUSINESS STATUS: Open DATE ESTABLISHED: 10/31/22 DATE CLOSED: No record
LICENSE(S) PEDDLER

MAILING: 630 SHARAR AVE OPA LOCKA FL 33054
BUSINESS: TAMIKA JONES KILLYS KIDS INCORP DBA REHOBOTH INT 630 SHARAR AVE 33054
PHONE: (786) 290-0380 BUSINESS STATUS: Open DATE ESTABLISHED: 11/02/22 DATE CLOSED:
LICENSE(S) PRIVATE, FOR PROFIT
CERTIFICATE OF USE NON RESIDENTIAL No record

SELECTION CRITERIA: cblbusiness.bus_stat='O' AND establish BETWEEN '01/01/2022' AND '12/31/2022'

MAILING: 2621 NW 135 ST OPA LOCKA FL 33054
BUSINESS: LAKEVIEW APARTMENTS LLC LAKEVIEW APARTMENTS 2621 NW 135 ST 33054
PHONE: (305) 448-6265 BUSINESS STATUS: Open DATE ESTABLISHED: 11/07/22 DATE CLOSED:
LICENSE(S) APARTMENTS WITH ONE BEDROOM
CERTIFICATE OF USE RESIDENTIAL
ok MUA 22091588

MAILING: 800 ALI BABA AVE OPA LOCKA FL 33054
BUSINESS: MARINA DOMINGUEZ MARINA'S BAR & RESTAURANT 800 ALI BABA AVE 33054
PHONE: (786) 774-7760 BUSINESS STATUS: Open DATE ESTABLISHED: 11/08/22 DATE CLOSED:
LICENSE(S) DRIVE IN - TAKE OUT
CERTIFICATE OF USE NON RESIDENTIAL
BARS, LOUNGE, TAVERNS, ETC NO FOOD SERVED
ok MUA 22095836

MAILING: 2099 NW 141 ST UNIT 18-19-20 OPA LOCKA FL 33054
BUSINESS: HAKAN SAYIN DIGITALS & MANUALS LLC 2099 NW 141 ST UNIT 18-19 33054
PHONE: (305) 467-0991 BUSINESS STATUS: Open DATE ESTABLISHED: 11/09/22 DATE CLOSED:
LICENSE(S) COMPUTER SERVICE
CERTIFICATE OF USE NON RESIDENTIAL
ok MUA 23000775

MAILING: 4380 NW 128 ST OPA LOCKA FL 33054
BUSINESS: RICHARD DAVID HOSKINS FILTER KING LLC 4380 NW 128 ST 33054
PHONE: (321) 720-5883 BUSINESS STATUS: Open DATE ESTABLISHED: 11/10/22 DATE CLOSED:
LICENSE(S) RENT OFFICE OR SPACE FOR BUSINESS OTHERWISE LICENSED
CERTIFICATE OF USE NON RESIDENTIAL
ok MUA 23000443

MAILING: 13180 NW 31 ST OPA LOCKA FL 33054
BUSINESS: JOSE POLLO JOSE POLO 13180 NW 31 ST 33054
PHONE: (813) 376-2116 BUSINESS STATUS: Open DATE ESTABLISHED: 11/14/22 DATE CLOSED:
LICENSE(S) STORAGE PER SQ FT
CERTIFICATE OF USE NON RESIDENTIAL
ok MUA 23000730

MAILING: 1261 & 1265 BURLINGTON ST OPA LOCKA FL 33054
BUSINESS: JANINE LUTZ SUPER STONE INC 1261 & 1265 BURLINGTON ST 33054
PHONE: (305) 681-3561 BUSINESS STATUS: Open DATE ESTABLISHED: 11/15/22 DATE CLOSED:
LICENSE(S) MANUFACTURE
CERTIFICATE OF USE NON RESIDENTIAL
STORAGE PER SQ FT
ok MUA 22094488

MAILING: 1281 & 1291 BURLINGTON ST OPA LOCKA FL 33054
BUSINESS: JANINE LUTZ SUPER STONE INC 1281 & 1291 BURLINGTON ST 33054
PHONE: (305) 681-3561 BUSINESS STATUS: Open DATE ESTABLISHED: 11/15/22 DATE CLOSED:
LICENSE(S) STORAGE PER SQ FT
CERTIFICATE OF USE NON RESIDENTIAL
MANUFACTURE
ok MUA 22094486

MAILING: 4400 NW 133 ST OPA LOCKA FL 33054
BUSINESS: TEJAS CHOKIS NATURAL VITAMINS LABORATTORY CORP 4400 NW 133 ST 33054
PHONE: (305) 265-1660 BUSINESS STATUS: Open DATE ESTABLISHED: 11/15/22 DATE CLOSED:
LICENSE(S) MANUFACTURE
STORAGE PER SQ FT
ok MUA 22094452

SELECTION CRITERIA: cblbusiness.bus_stat='O' AND establish BETWEEN '01/01/2022' AND '12/31/2022'

CERTIFICATE OF USE NON RESIDENTIAL

MAILING: 14475 NW 26 AVE OPA LOCKA FL 33054
BUSINESS: CARLOS PICCINONNA GREAT WASTE & RECYCLING SERVICES 14475 NW 26 AVE 33054
PHONE: (305) 688-6188 BUSINESS STATUS: Open DATE ESTABLISHED: 11/16/22 DATE CLOSED:
LICENSE(S) STORAGE PER SQ FT
CERTIFICATE OF USE NON RESIDENTIAL
ok MUA 23000599

MAILING: 2327 NW 149 ST OPA LOCKA FL 33054
BUSINESS: DONNA E MILO REEF RUNNER BOATS INC 2327 NW 149 ST 33054
PHONE: (954) 914-2822 BUSINESS STATUS: Open DATE ESTABLISHED: 11/22/22 DATE CLOSED:
LICENSE(S) CABINET MAKER OR CARPENTER SHOP
CERTIFICATE OF USE NON RESIDENTIAL
ok MUA 23000075

MAILING: 3821 NW 135 ST BAY C&D OPA-LOCKA FL 33054
BUSINESS: EYLIN LANDERO EZ TIRES & WINDOW TINTING CORP. 3821 NW 135 ST BAY C&D 33054
PHONE: (305) 934-1966 BUSINESS STATUS: Open DATE ESTABLISHED: 11/23/22 DATE CLOSED:
LICENSE(S) SALE OF AUTO ACCESSORIES
CERTIFICATE OF USE NON RESIDENTIAL
ok MUA 21007617

MAILING: 12951 PORTSAID ROAD #19 OPA-LOCKA FL 33054
BUSINESS: SEEMA MIRZA ASM AUTOMOTIVE CREATIONS LLC 12951 PORTSAID RD 33054
PHONE: (954) 536-6608 BUSINESS STATUS: Open DATE ESTABLISHED: 12/01/22 DATE CLOSED:
LICENSE(S) AUTOMOBILE BODYREPAIR&PAINTING&MECHANICS LIGHT MECHANICS / MECHANIC WORK
CERTIFICATE OF USE NON RESIDENTIAL
ok MUA 20000871

MAILING: 13965 NW 19TH AVE OPA-LOCKA FL 33054
BUSINESS: NIETO, LUCAS KN TOPS LLC 13965 NW 19 AVE 33054
PHONE: (786) 290-9080 BUSINESS STATUS: Open DATE ESTABLISHED: 12/05/22 DATE CLOSED:
LICENSE(S) STORAGE PER SQ FT
CERTIFICATE OF USE NON RESIDENTIAL
ok MUA 22001003

MAILING: 12964 LEJEUNE RD OPA-LOCKA FL 33054
BUSINESS: ALEX ZHERTH FLEX AUTO BODY INC 12964 LEJEUNE RD 33054
PHONE: (786) 457-2388 BUSINESS STATUS: Open DATE ESTABLISHED: 12/07/22 DATE CLOSED:
LICENSE(S) AUTO REPAIR SHOP AUTO BODY
CERTIFICATE OF USE NON RESIDENTIAL
ok MUA 22091388

MAILING: 3050 NW 134 ST OPA LOCKA FL 33054
BUSINESS: JORGE A LOPEZ 4PLEX LLC 3050 NW 134 ST 33054
PHONE: (305) 821-2562 BUSINESS STATUS: Open DATE ESTABLISHED: 12/08/22 DATE CLOSED:
LICENSE(S) APARTMENTS WITH FOUR BEDROOMS
CERTIFICATE OF USE RESIDENTIAL
ok MUA 22096371

MAILING: 3040 NW 134TH ST OPALOCKA FL 33054
BUSINESS: JORGE LOPEZ 4PLEX LLC 3040 NW 134 ST 33054
PHONE: (305) 521-2562 BUSINESS STATUS: Open DATE ESTABLISHED: 12/08/22 DATE CLOSED:
LICENSE(S) APARTMENTS WITH FOUR BEDROOMS
CERTIFICATE OF USE RESIDENTIAL
ok MUA 22096370

SELECTION CRITERIA: cblbusiness.bus_stat='O' AND establish BETWEEN '01/01/2022' AND '12/31/2022'

==========

==========

MAILING: 14663 NW 27 AVE OPA-LOCKA FL 33054
BUSINESS: CLIVE CHRISTIAN KARLINKZ AUTO GROUP, LLC 14663 NW 27 AVE 33054
PHONE: (786) 351-8131 BUSINESS STATUS: Open DATE ESTABLISHED: 12/14/22 DATE CLOSED:
LICENSE(S) AUTO BROKER / VEHICLE SALES
CERTIFICATE OF USE NON RESIDENTIAL

pending MUA23000325

==========

MAILING: 13440 NW 28 CT OPA LOCKA FL 33054
BUSINESS: JOHAN CORONA VALARC SERVICES CORP 13440 NW 28 CT 33054
PHONE: (786) 420-0871 BUSINESS STATUS: Open DATE ESTABLISHED: 12/19/22 DATE CLOSED:
LICENSE(S) STORAGE PER SQ FT
CERTIFICATE OF USE NON RESIDENTIAL

No record

==========

MAILING: 614 E 30 ST HIALEAH FL 33013
BUSINESS: ALFREDO DIAZ ALFREDO DIAZ APPLIANCE CORP 4153 NW 132 ST 33054
PHONE: (305) 769-1110 BUSINESS STATUS: Open DATE ESTABLISHED: 12/20/22 DATE CLOSED:
LICENSE(S) STORAGE PER SQ FT
REPAIR AND SERVICE SHOPS
CERTIFICATE OF USE NON RESIDENTIAL

ok MUA23000521

==========

MAILING: 401 OPA LOCKA BLVD OPA LOCKA FL 33054
BUSINESS: CHRISTOPHER CHEN CHEN NEIGHBORHOOD MEDICAL CENTER 401 OPA LOCKA BLVD 33054
PHONE: (786) 424-7200 BUSINESS STATUS: Open DATE ESTABLISHED: 12/27/22 DATE CLOSED:
LICENSE(S) PROFESSIONAL SERVICES
CERTIFICATE OF USE NON RESIDENTIAL

ok MUA23001977

==========

MAILING: 12980 NW 42 AVE UNIT 114 OPA LOCKA FL 33054
BUSINESS: CRISLY ESTRADA VEGA MAX ELECTRONICS 12980 NW 42 AVE UNIT 114 33054
PHONE: (786) 359-2571 BUSINESS STATUS: Open DATE ESTABLISHED: 12/29/22 DATE CLOSED:
LICENSE(S) REPAIR AND SERVICE SHOPS
CERTIFICATE OF USE NON RESIDENTIAL

ok MUA23000697

==========

TOTAL BUSINESS : 117

EXHIBIT “H”

Cost Estimate Spreadsheet PS/Basin #5 (Appendix 2) and PS/Basin #7 (Appendix 3)			
Cost Item		BASIN No.	
		#5	#7
Permitting:			
Mobilization:			
MOT:			
Flow by-Pass/Flow Control:			
Demolition & Restoration			
Manhole Repairs	Point Repairs		
	Manhole Adjustments(ring/cover, grouting, etc.)		
	Manhole Repair/Lining		
	Pipe-to-manhole Grout/Seal		
	Other:		
	Other:		
	Other:		
	Other:		
Pipeline Repair/Replacement	GM Point Repair		
	CIPP/Gravity Main		
	GM-to-Lateral		
	Other:		
	Other:		
Cost calculations	Subtotal Cost:		
	Contingency:		
	Funding Source:		
	Estimated Completion Date:		

***Any required cost(s) other than the costs listed in the Spreadsheet above shall be included according to the CA Appendices.**

APPENDICIES 2 & 3

Appendix No.2
Basin No.5 – Utility Pending Corrective Action Plan/Sewer System Rehabilitation Work
[SSES 2nd Cycle Phase 3 Report, Addendum No.7]
Addendum to 2019 Consent Agreement

DONNA-MARIE GRACE LICENSE No 47050 STATE OF FLORIDA PROFESSIONAL ENGINEER

THIS ITEM HAS BEEN DIGITALLY SIGNED AND SEALED BY

ON THE DATE ADJACENT TO THE SEAL.
SIGNED AND SEALED AND THE SIGNATURE MUST BE VERIFIED ON ANY ELECTRONIC COPIES.

Item No.	Deficiencies description and Location	Deficiencies / Repairs Status [Corrected / Pending]	Required Tests	Reports required to be submitted	Proposed completion date.
Item No.1 – Basin with excessive Infiltration/Inflow levels. See Note 1	Conduct night-time CCTV inspection after rain event to identify where excessive I/I is occurring. Conduct flow measurements after investigation & repair completion.	Pending-submit Night Flow (I/I) Re-measurements Rpt demonstrating compliance < 5,000 GPDIM and Smoke Test Rpt. for any new deficiency discovered.	Night Flow (I/I) Re-Test	Flow Test Report	November 2023
Item No.2 Install Manhole Inserts on all Manholes to reduce Inflow	MH inserts previously installed in areas prone to flooding, however all manholes will be provided with MH Inserts.	Pending	N/A	Manholes Inspection Report with pictures demonstrating compliance.	November 2023
Item No.3 Require property owners to repair broken and/or missing cleanouts. See Note 2	2407 NW 135 Street 2405 NW 135 Street (2 locations) 2201 NW 135 Street	Corrected [Violation notices were provided to property owners and all repairs were completed].	N/A	Cleanouts Report with pictures demonstrating compliance.	November 2023
Item No.4 - City to repair leaking manhole in right-of-way and from water meter box	13565 NW 27 Avenue – MH 5-1 2281 NW 135 Terrace (water meter)	Pending	N/A for isolated MH and Water Meter.	MHs 5-1 with pictures demonstrating compliance Water Meter Inspection Report with pictures before & after repairs demonstrating compliance.	November 2023
Item No.5 - Repair manhole cement ring crack	MH 5-1A, 5-3 and 5-8 (isolated manholes)	Corrected	N/A	MHs 5-1A, 5-3 and 5-8 Inspection Report with pictures before and after repairs to demonstrate compliance.	November 2023

Note 1: Evaluation is ongoing by the Utility to determine what is causing the excessive inflow to the collection system. Once the cause is identified, the Utility will conduct the flow measurements, manhole inspections and smoke testing of the entire collection basin as required by Miami Dade County for the SSES Cycle 3.
Note 2: The Utility in coordination with RER-DERM will provide an Advisory Notice to the property owners to correct the private deficiencies discovered on private properties. The Utility will follow up the owner's response to the advisory notice, inspect the repairs done by the property owner, and RER-DERM will provide enforcement actions in coordination with the utility when required.

Revised to Addendum No.7, PS/Basin No.7-CAP
Date: 12/05/2022

Appendix No.3
Basin No.7 – Utility Pending Corrective Action Plan/Sewer System Rehabilitation Work
[SSES 2nd Cycle Phase 3 Report, Addendum No.7]
Addendum to 2019 Consent Agreement

DONNA-MARIE GRACE LICENSE No 47050 STATE OF FLORIDA PROFESSIONAL ENGINEER

THIS ITEM HAS BEEN DIGITALLY SIGNED AND SEALED BY

ON THE DATE ADJACENT TO THE SEAL.
SIGNED AND SEALED AND THE SIGNATURE MUST BE VERIFIED ON ANY ELECTRONIC COPIES.

Item No.	Deficiencies description and Location	Deficiencies / Repairs Status [Corrected / Pending]	Required Tests	Reports required to be submitted	Proposed completion date.
Item No.1 – Basin with excessive Infiltration/Inflow levels. See Note 1	Conduct night-time CCTV inspection after rain event to identify where excessive I/I is occurring. Conduct additional flow measurements following investigation and completion of repairs.	Pending to submit Night Flow (I/I) Re-measurements Report demonstrating compliance with less than 5,000 GPDIM	Night Flow (I/I) Re-Test	Flow Test Report	November 2023
Item No.2 Install Manhole Inserts on all Manholes to reduce Inflow	Manhole inserts were previously installed in areas prone to flooding, however all manholes will be provided with Manhole Inserts.	Pending	N/A	Manholes Inspection Report with pictures demonstrating compliance.	November 2023
Item No.3 Require property owners to repair broken and/or missing cleanouts. See Note 2	13004, 13008 & 13112 Alexandria Drive 13245, 13310 & 13311 Alexandria Drive 13321, 13440 & 13485 Alexandria Drive	Corrected [Violation notice provided to property owners and all repairs were completed].	N/A	Cleanout report with pictures demonstrating compliance.	November 2023
Item No.4 - Locate missing manhole and provide inspection report identifying and correcting deficiencies.	MH 7-1	Pending	Smoke Test for pipe segment between MH 7-1 and MH 7-2 (see MH7-2 in item no. 5 below).	Smoke Test Report with pictures demonstrating compliance.	November 2023
Item No.5 – Correct MHs deficiencies.	MH 7-2 and 7-7 (cement ring crack) MH 7-8 (rehabilitation work for smoke leak from ring)	Corrected	Smoke Test for pipe segment between MH 7-7 & MH 7-8 and MH 7-3A & MH 7-2	Smoke Test Report with pictures demonstrating compliance.	November 2023
	MH 7-3A 13235 Alexandria Drive	Pending			

Note 1: Evaluation is ongoing by the Utility to determine what is causing the excessive inflow to the collection system. Once the cause is identified, the Utility will conduct the flow measurements, manhole inspections and smoke testing of the entire collection basin as required by Miami Dade County for the SSES Cycle 3.
Note 2: The Utility in coordination with RER-DERM will provide an Advisory Notice to the property owners to correct the private deficiencies discovered on private properties. The Utility will follow up the owner's response to the advisory notice, inspect the repairs done by the property owner, and RER-DERM will provide enforcement actions in coordination with the utility when required.

EXHIBIT “I”

June 2020 Revision

File Transfer Protocol (FTP) Option for the Submittal of Sewer Extension Projects to the Water and Wastewater Division of RER-DERM

V. 3.0

The Water and Wastewater Division of DERM performs a variety of engineering reviews to design-plans for construction and installation of water and sewer infrastructure that includes sanitary sewer collection and transmission systems and sanitary sewer pump stations.

As a result of the current COVID-19 pandemic we had to rethink the way that we conduct business and reached out to Miami-Dade County's Municipal Utilities to coordinate plan review and approval processes that protect our team members, colleagues, customers and community.

In order to maintain our services under this COVID-19 environment, it was concluded that the safest way to handle Sewer Extension Projects was by requiring electronic instead of paper submittals.

The Water and Wastewater Division of RER-DERM has started to use a File Transfer Protocol (FTP) Option where all the utilities can upload the sewer extension projects that they have already approved.

CONTENTS

- FTP SUBMITTAL STEPS
- IMPORTANT CONSIDERATIONS

FTP SUBMITTAL STEPS

1. FOR PERMIT APPLICATIONS
2. FOR CERTIFICATION APPLICATIONS
3. FOR RESPONSES TO REQUEST FOR INFORMATION (RFI) LETTERS

MIAMI-DADE COUNTY

FTP SUBMITTAL STEPS

1. FOR PERMIT APPLICATIONS

FTP Steps
-Permit Applications-

1

Open the following link:

https://sftp2.miamidade.gov/?wtcQID=REVSTVJlY29yZHM6ODdCaU1NVDE

This is a really long link because it contains log in/authentication information. **Access the FTP by directly clicking on the above hyperlink**. Do not try to copy and paste the above address to a web browser because it won't work. If you go to the site and try to save it as a bookmark or favorite, it will truncate the link and you will be denied access and prompted for a password.

FTP Steps
-Permit Applications-

2

Look for the SEWER EXTENSION APPLICATIONS folder

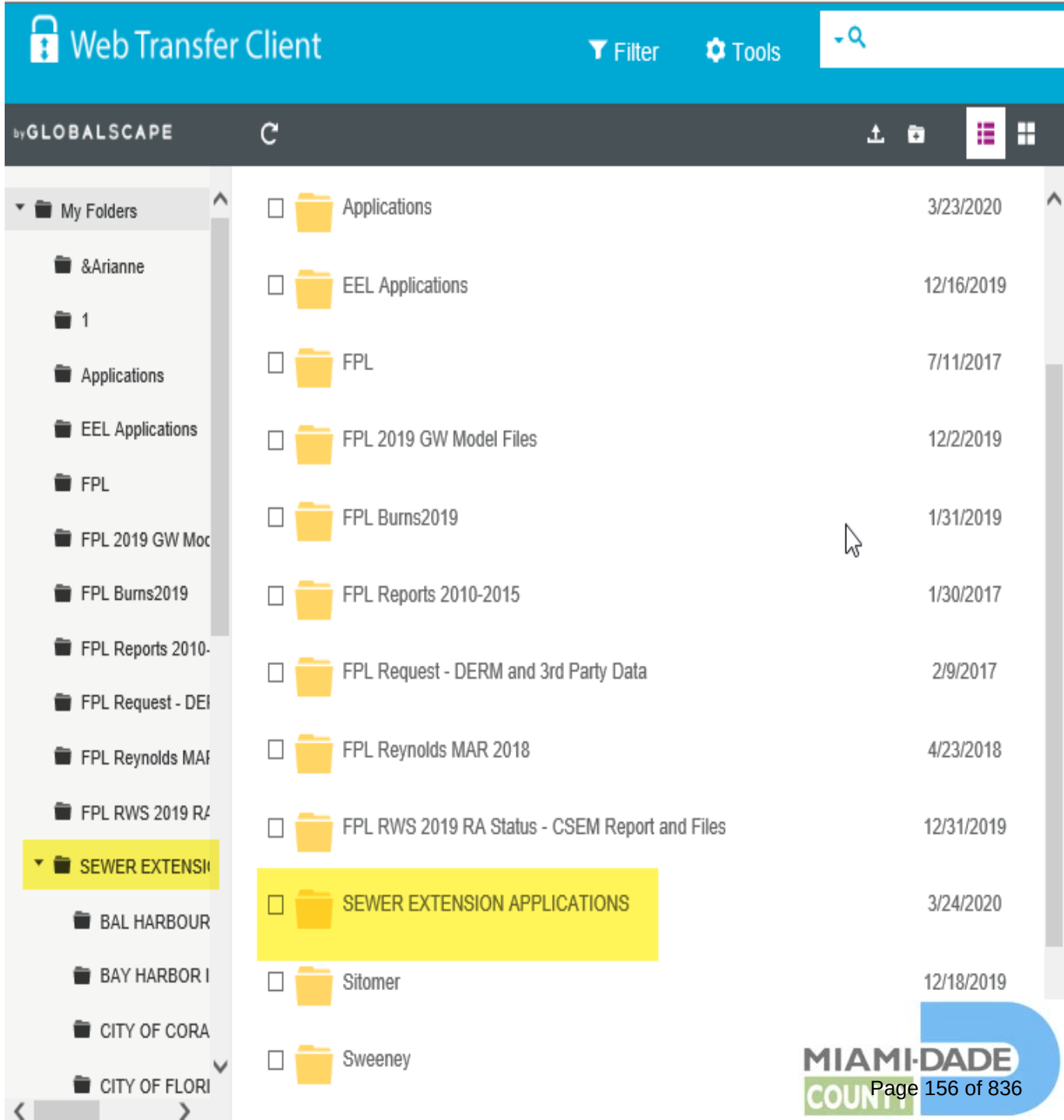

FTP Steps
-Permit Applications-

3

Open the SEWER EXTENSION APPLICATIONS folder and look for your specific Municipal Utility's folder.

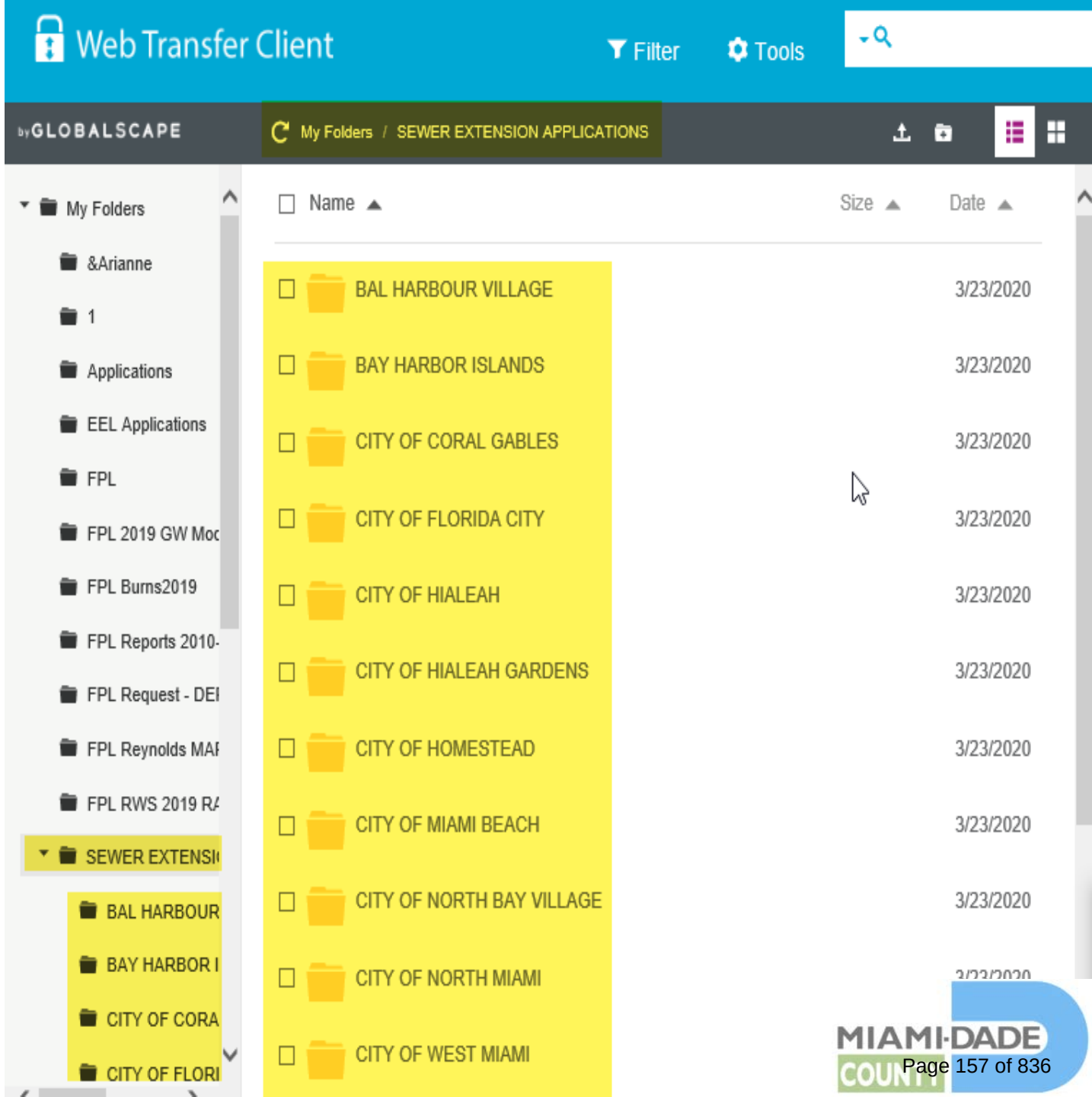

FTP Steps
-Permit Applications-

4

Open your specific Municipal Utility's folder and click on the "New Folder" Icon to create a new individual folder for each sewer extension project.

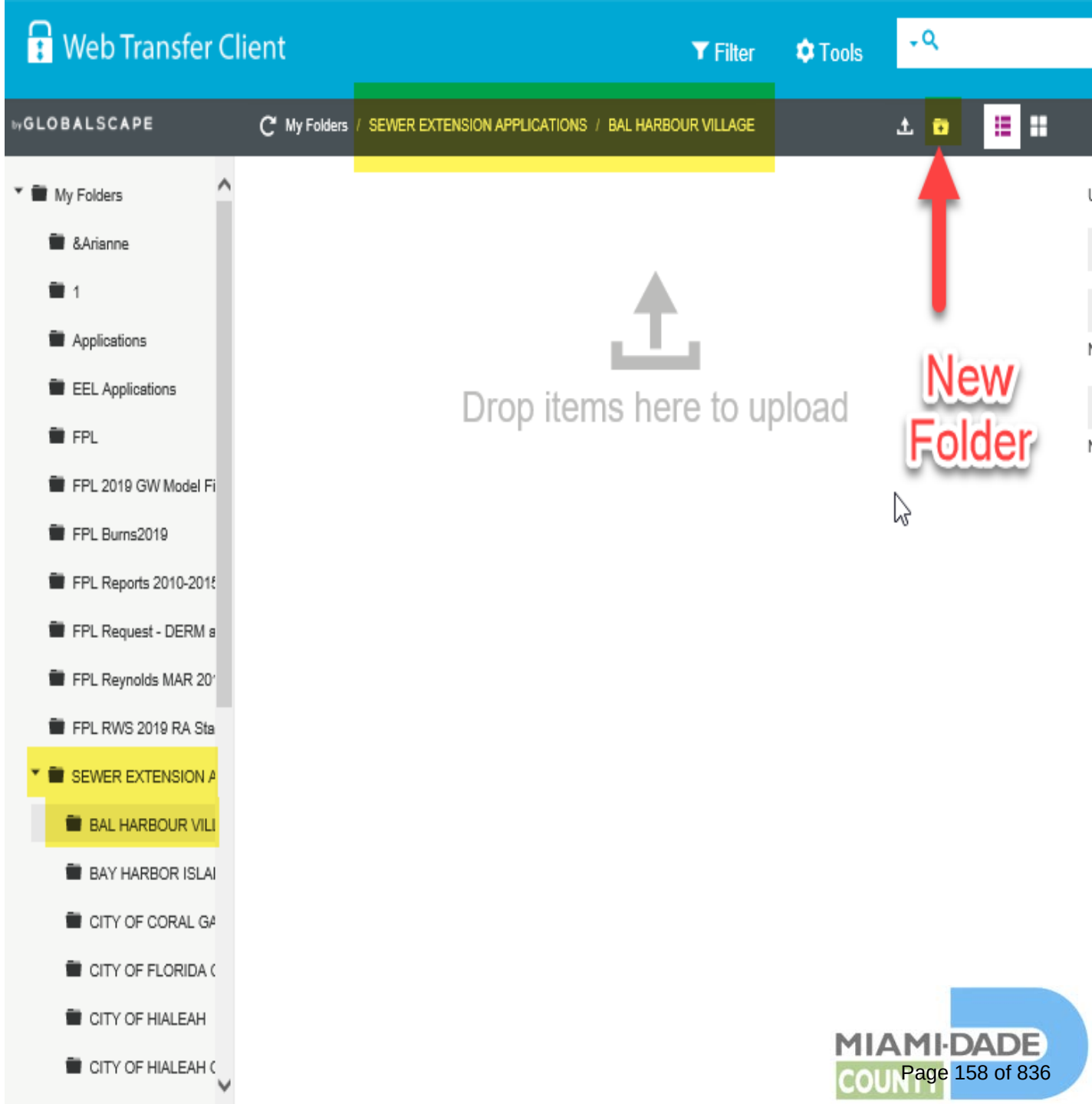

FTP Steps
-Permit Applications-

5

Once prompted to name the "New Folder", *<u>name it with the same Project Name used to complete the FDEP Permit Application Form.</u>*

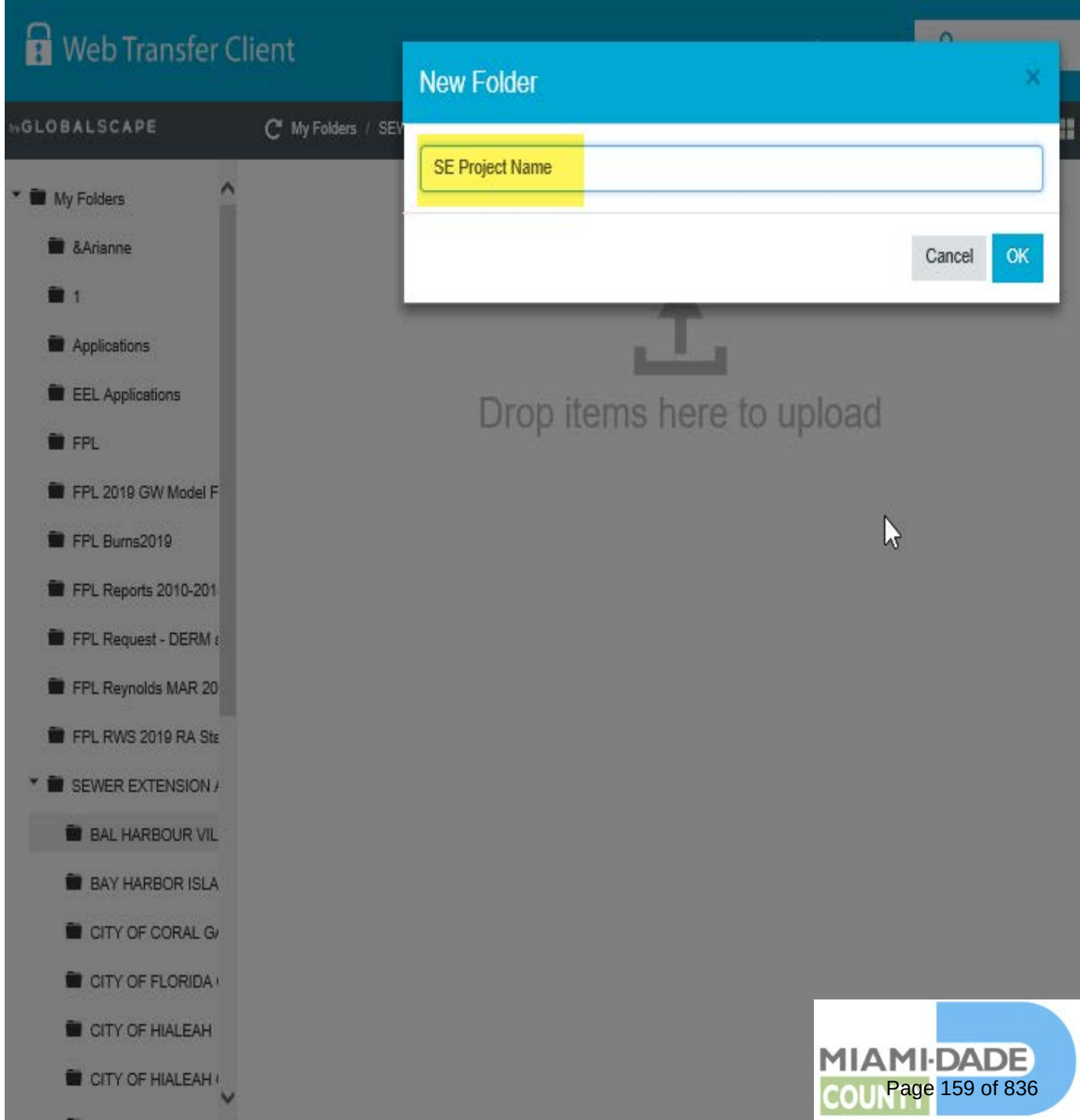

FTP Steps
-Permit Applications-

6

Now you have created an specific folder for the new SE project to be uploaded.

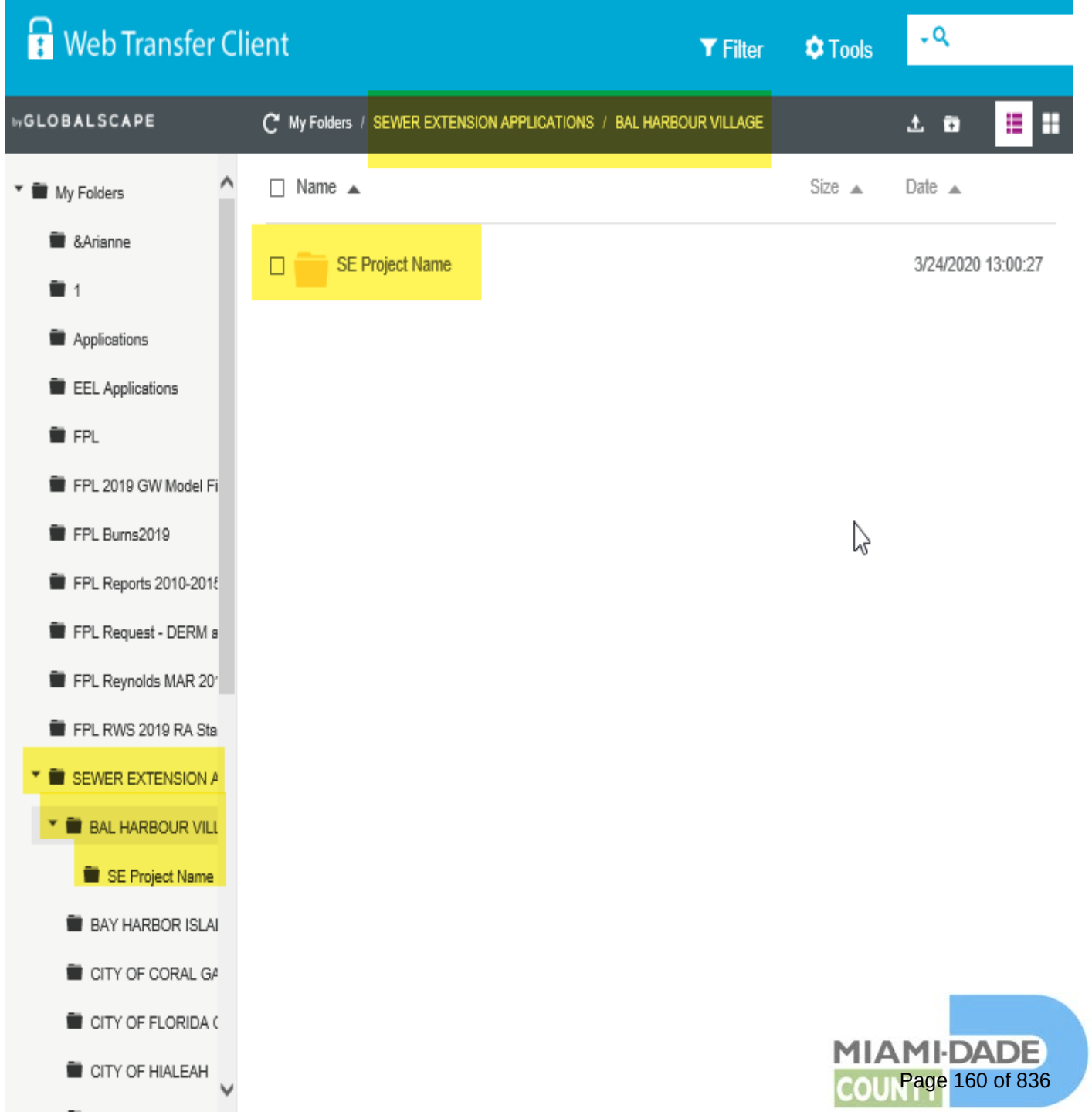

FTP Steps
-Permit Applications-

7

Open that folder and either click on the "File Upload" icon or Drop the items directly to the folder to start uploading Sewer Extension Plans, Applications and any other supporting documentation.

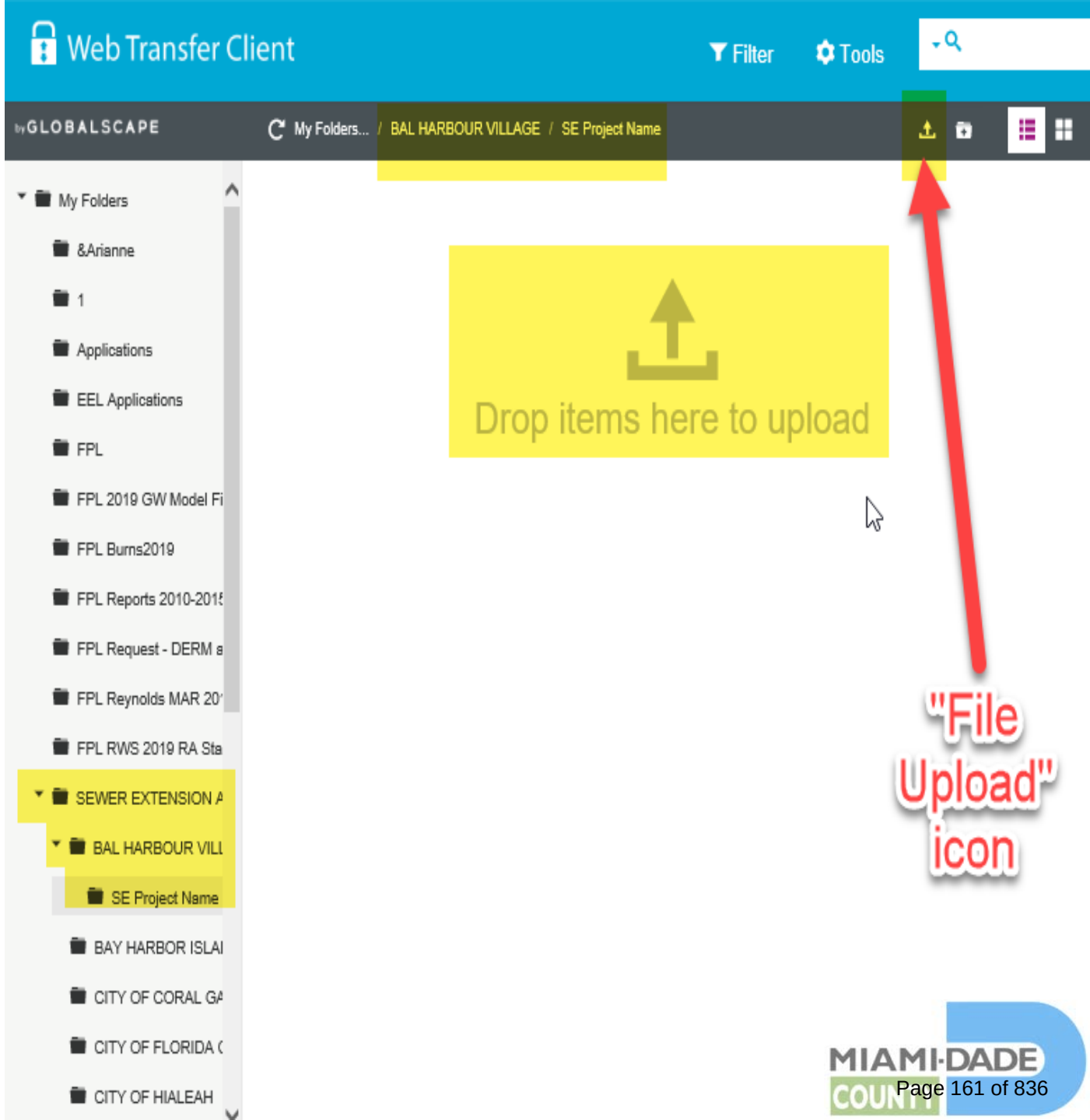

FTP Steps
-Permit Applications-

8

Once all the files have been uploaded for that project the FTP uploading process has been completed and the web application can be closed.

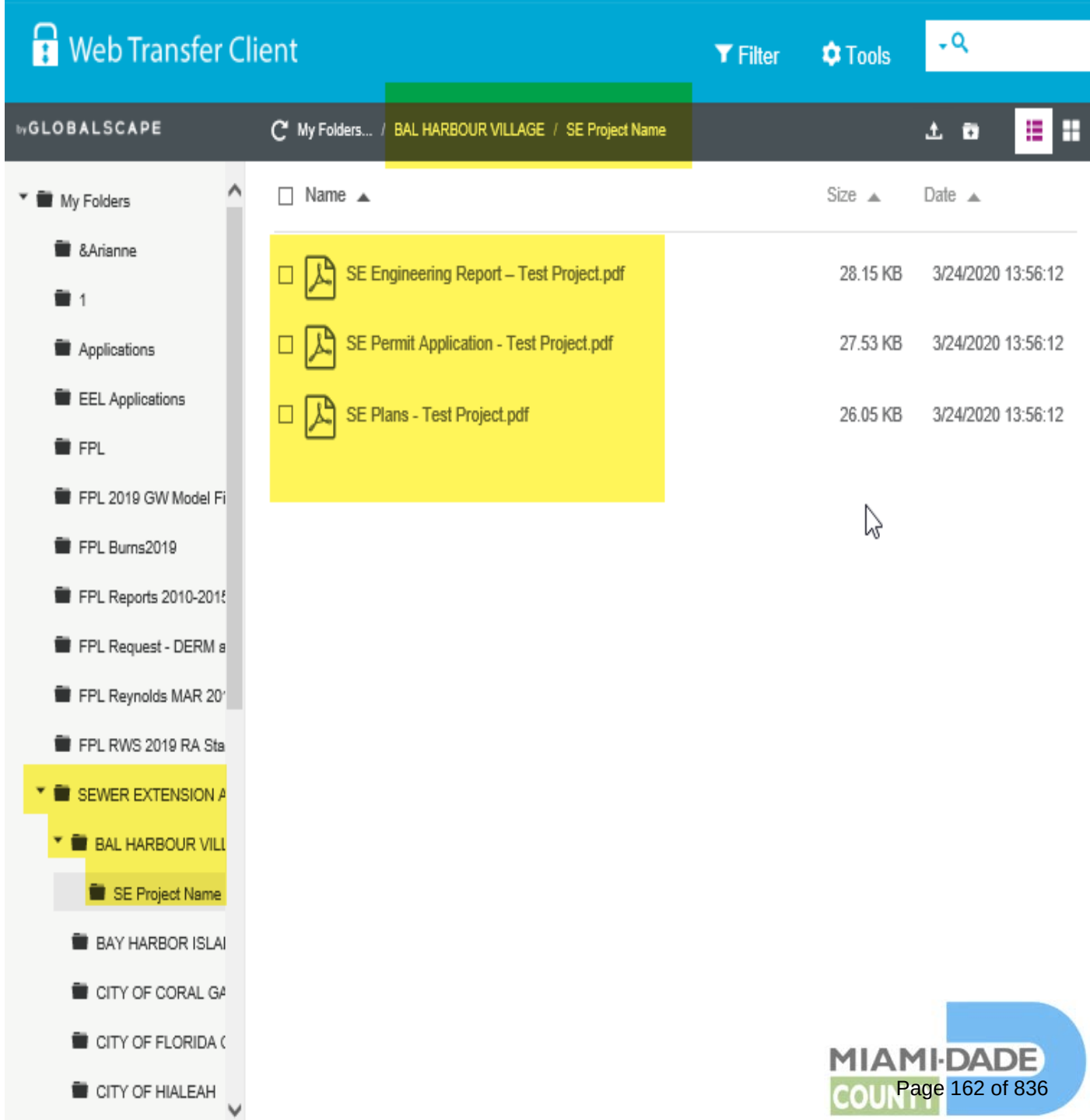

FTP Steps
-Permit Applications-

9

Send an e-mail notifying the Water and Wastewater Division of RER-DERM of your Permit Application submittal.

NOTICE that in order to better serve you, your e-mail has to include the following standard data and nomenclature. See next slides.

FTP Steps
-Permit Applications-

9.1

E-mail has to be addressed to:

Estelle Anorga at Estelle.Anorga@miamidade.gov

Alejandra Villanueva at Alejandra.Villanueva@miamidade.gov

and Carbon Copied (CC) to:

Rosa Areas at Rosa.Areas@miamidade.gov

Galo Pacheco at Galo.Pacheco@miamidade.gov

MIAMI-DADE COUNTY

FTP Steps
-Permit Applications-

9.2

E-mail Subject Line has to be written as follows:

FTP SE PERMIT APPLICATION Submittal Notification (Name of your project as in the FDEP Permit Application and FTP Folder) Name of the Municipal Utility serving your project.

<u>Example:</u>

FTP SE PERMIT APPLICATION Submittal Notification (Village of the South III) Homestead

FTP Steps
-Permit Applications-

9.3

E-mail message has to include the folder name of your FTP submittal, the Municipal Utility (folder) name and a brief description of your project.

FTP Steps
-Permit Applications-

10

The Water and Wastewater Division of RER-DERM will download the documents and initiate their review.

Engineers of Record and Permit Applicants will be contacted for any follow-up question or comment regarding that project.

MIAMI-DADE COUNTY

FTP SUBMITTAL STEPS

2. FOR CERTIFICATION APPLICATIONS

FTP Steps
-Certifications-

1

Open the following link:

https://sftp2.miamidade.gov/?wtcQID=REVSTVJlY29yZHM6ODdCaU1NVDE

This is a really long link because it contains log in/authentication information. **Access the FTP by directly clicking on the above hyperlink**. Do not try to copy and paste the above address to a web browser because it won't work. If you go to the site and try to save it as a bookmark or favorite, it will truncate the link and you will be denied access and prompted for a password.

FTP Steps
-Certifications-

2

Look for the SEWER EXTENSION APPLICATIONS folder

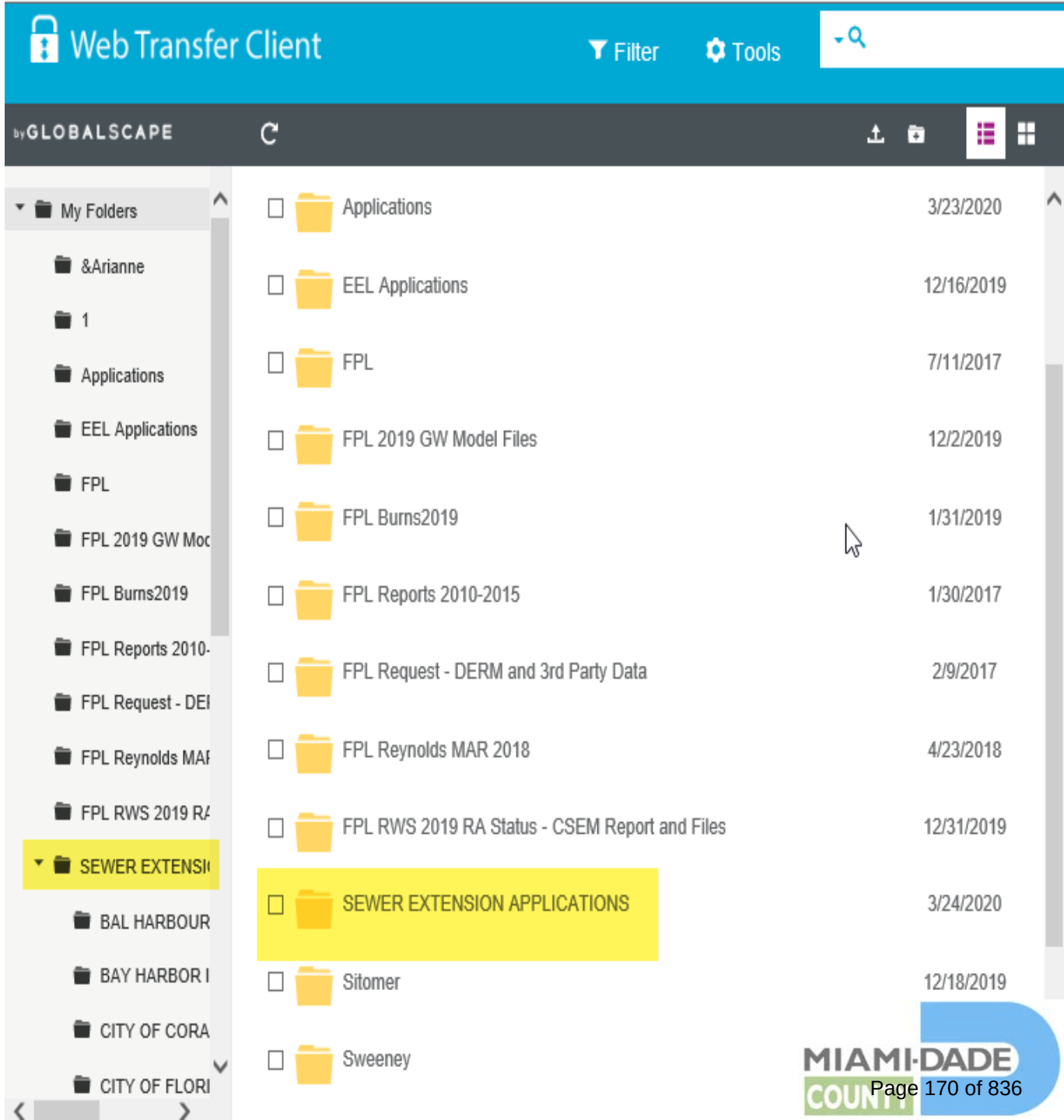

FTP Steps
-Certifications-

3

Open the SEWER EXTENSION APPLICATIONS folder and look for your specific Municipal Utility's folder.

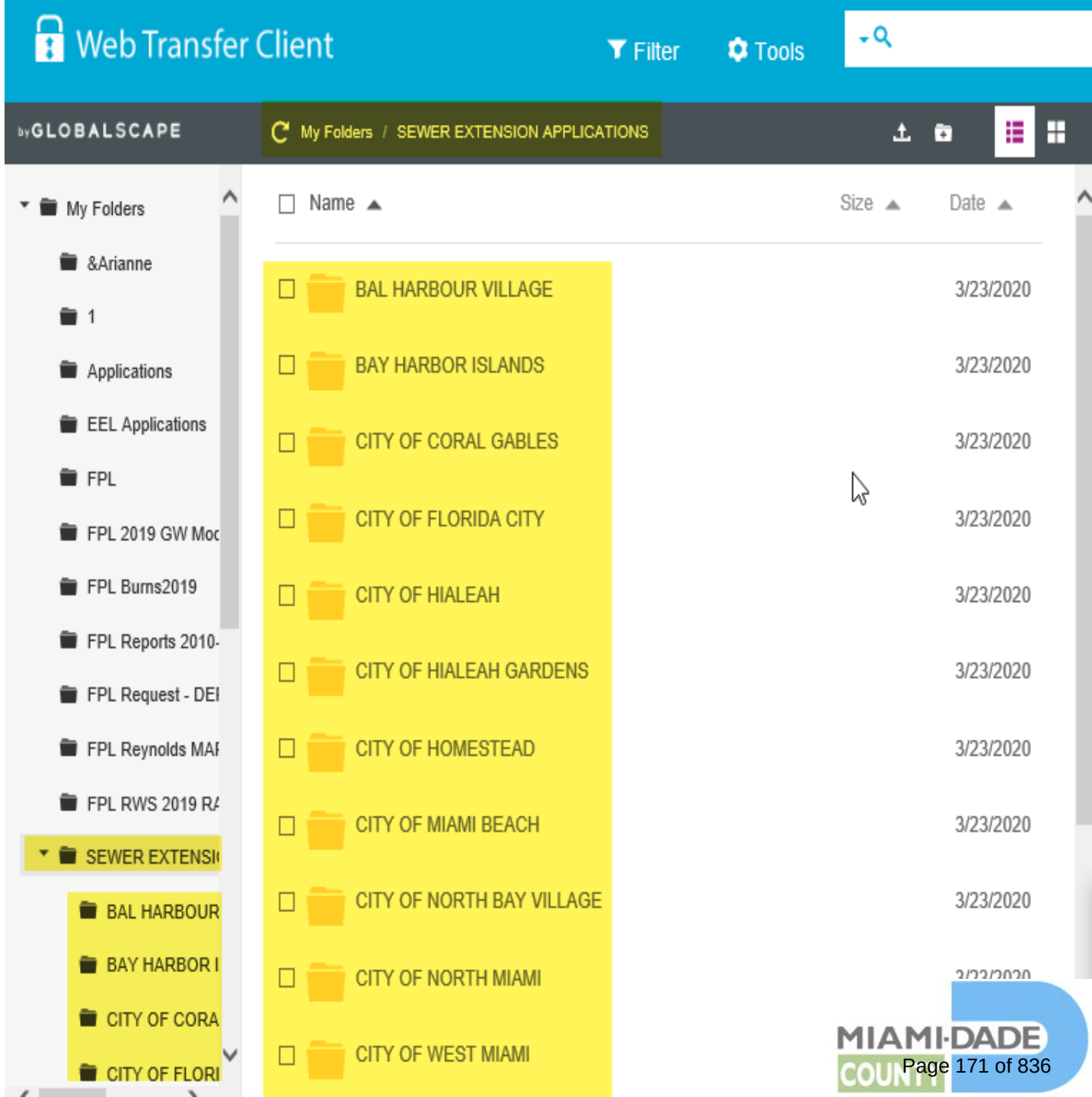

FTP Steps
-Certifications-

4

Open your specific Municipal Utility's folder and click on the "New Folder" Icon to create a new individual folder for each sewer extension project.

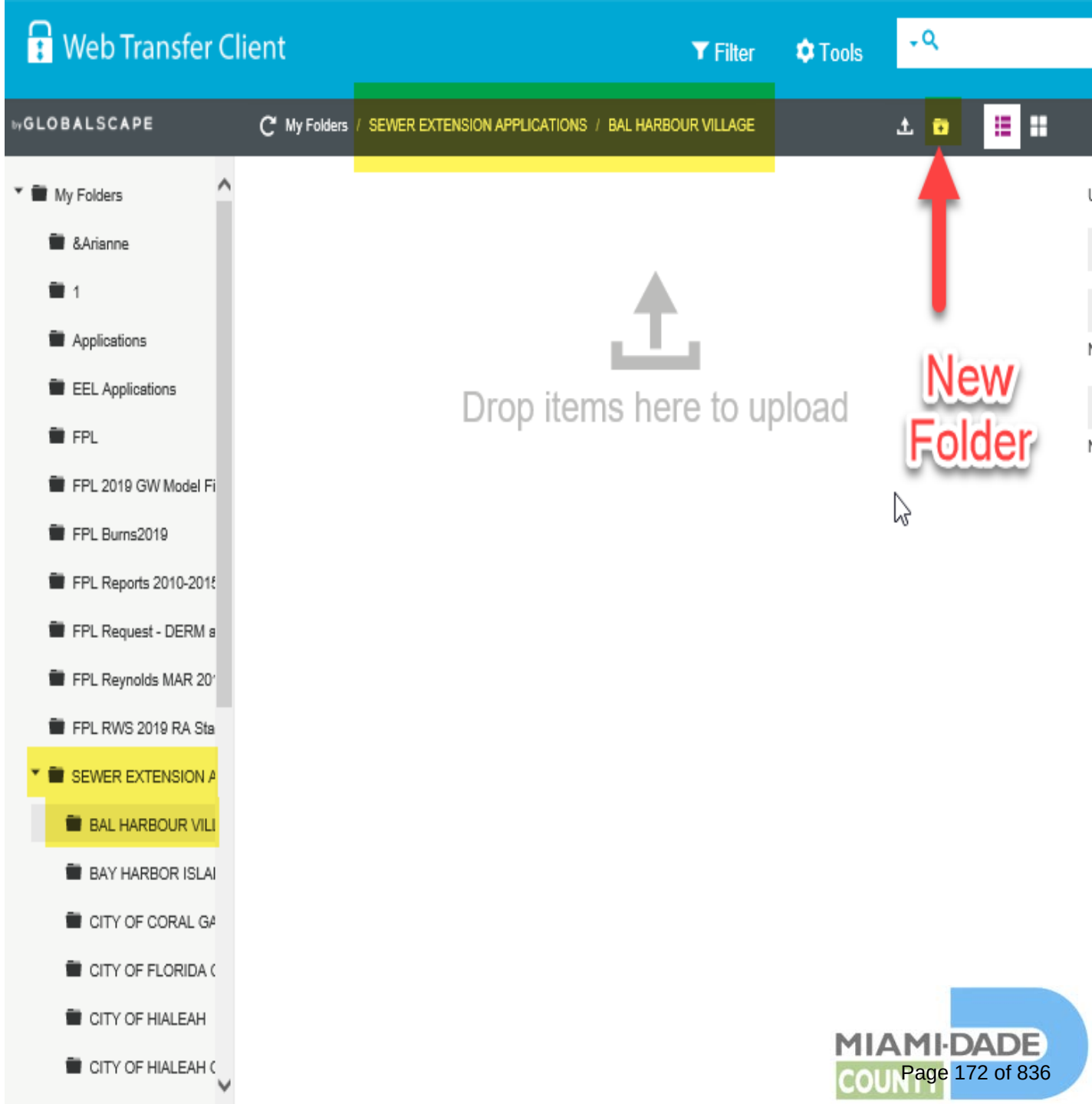

FTP Steps
-Certifications-

5

Once prompted to name the "New Folder", *<u>name it with the DERM Permit Number and Project Name as they appear in the Sewer Extension Permit.</u>*

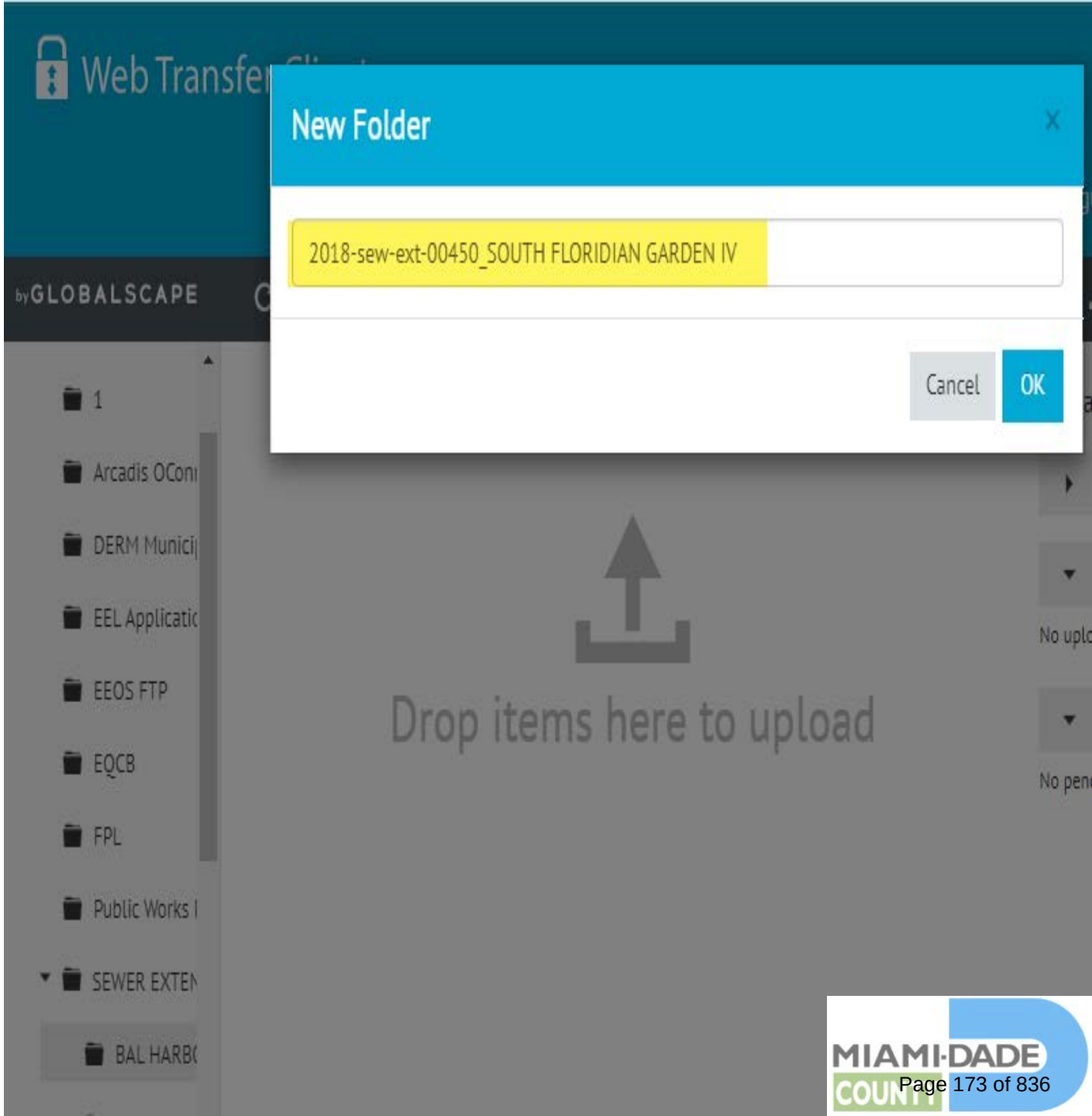

FTP Steps
-Certifications-

6

Now you have created an specific folder for the new SE CERTIFICATION project to be uploaded.

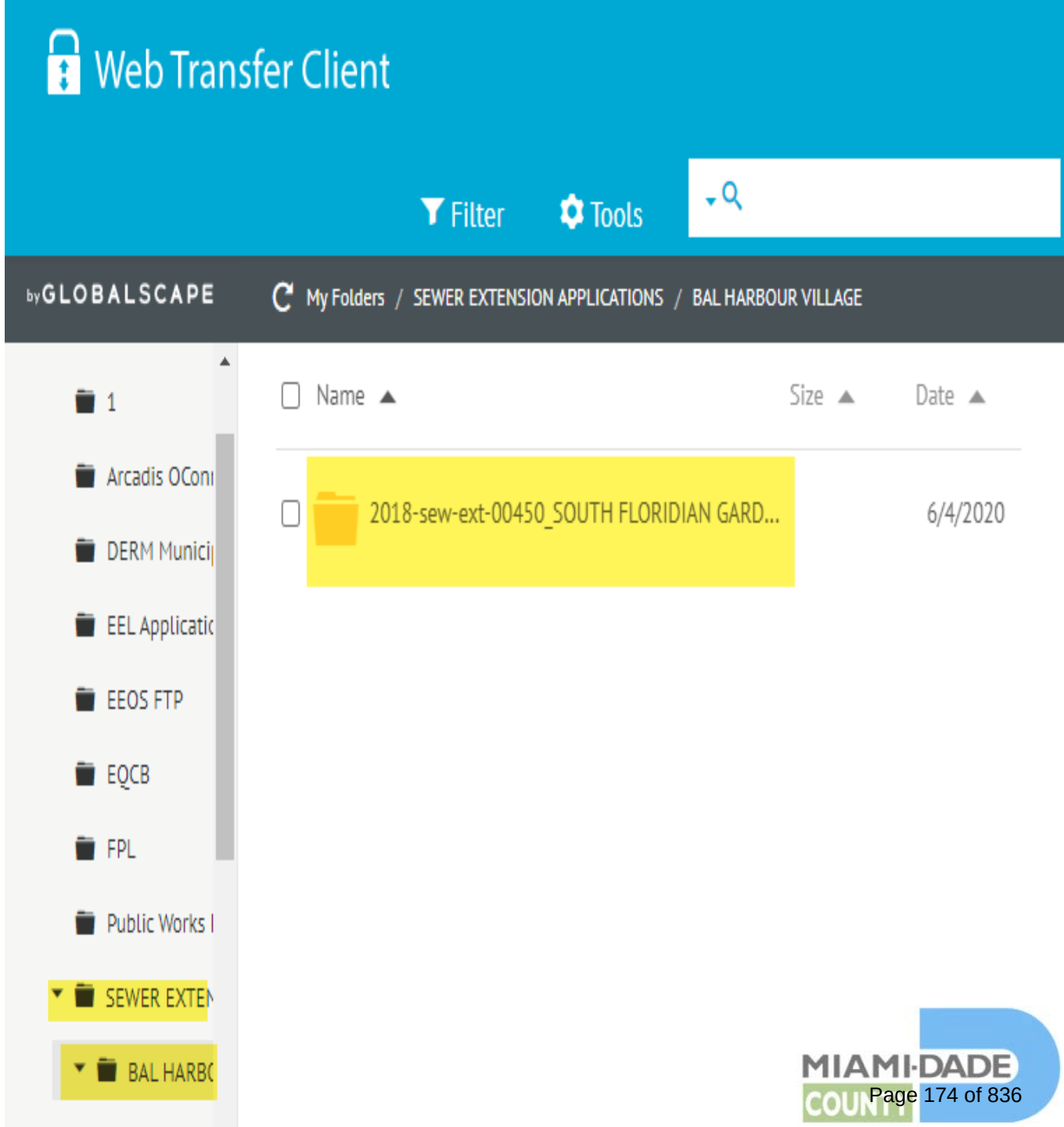

FTP Steps
-Certifications-

7

Open that folder and either click on the “File Upload” icon or Drop the items directly to the folder to start uploading Sewer Extension As-Built Drawings, Certification Applications, Testing Results and any other supporting documentation.

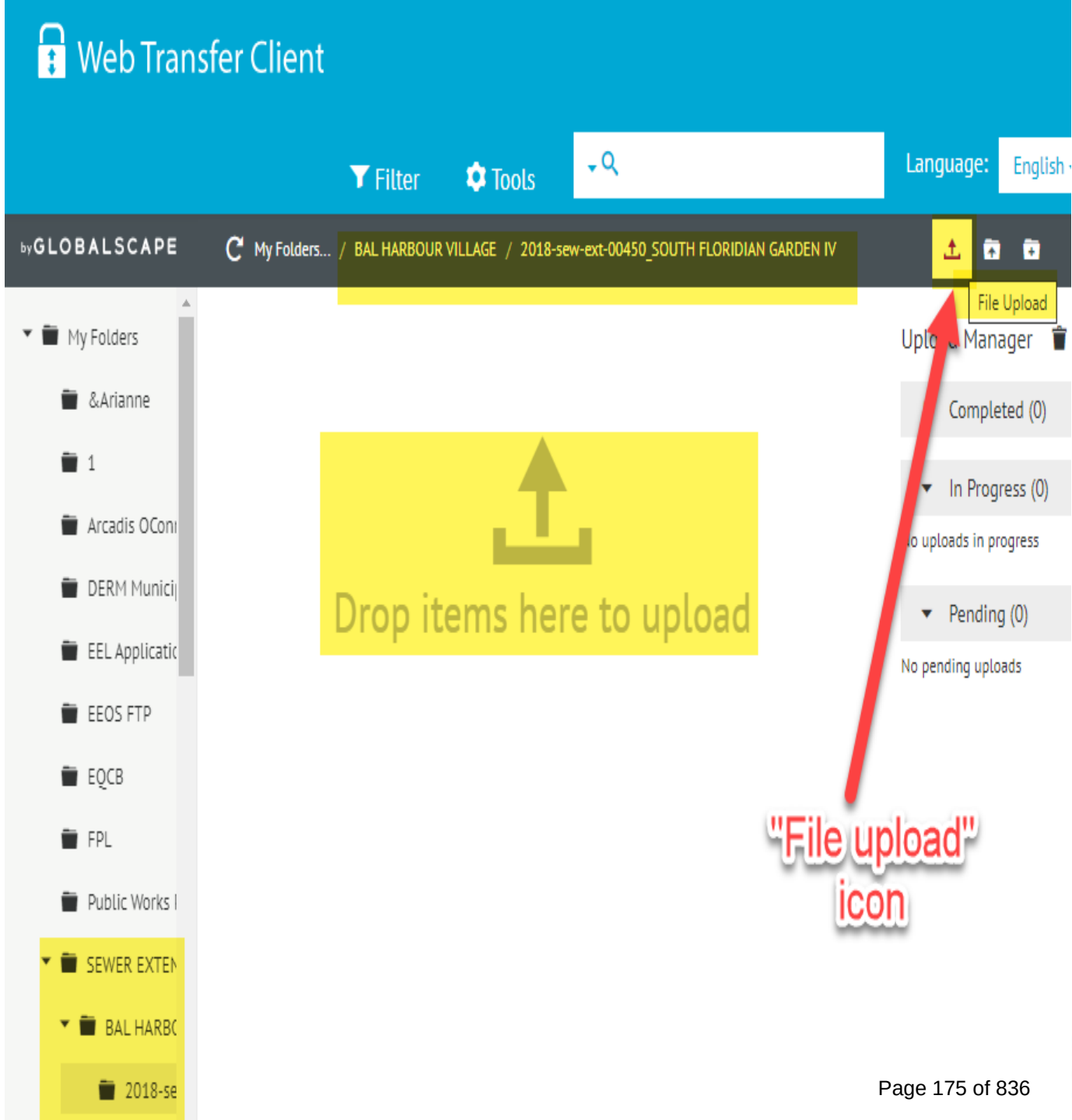

FTP Steps
-Certifications-

8

Once all the files have been uploaded for that project, the FTP uploading process has been completed and the web application can be closed.

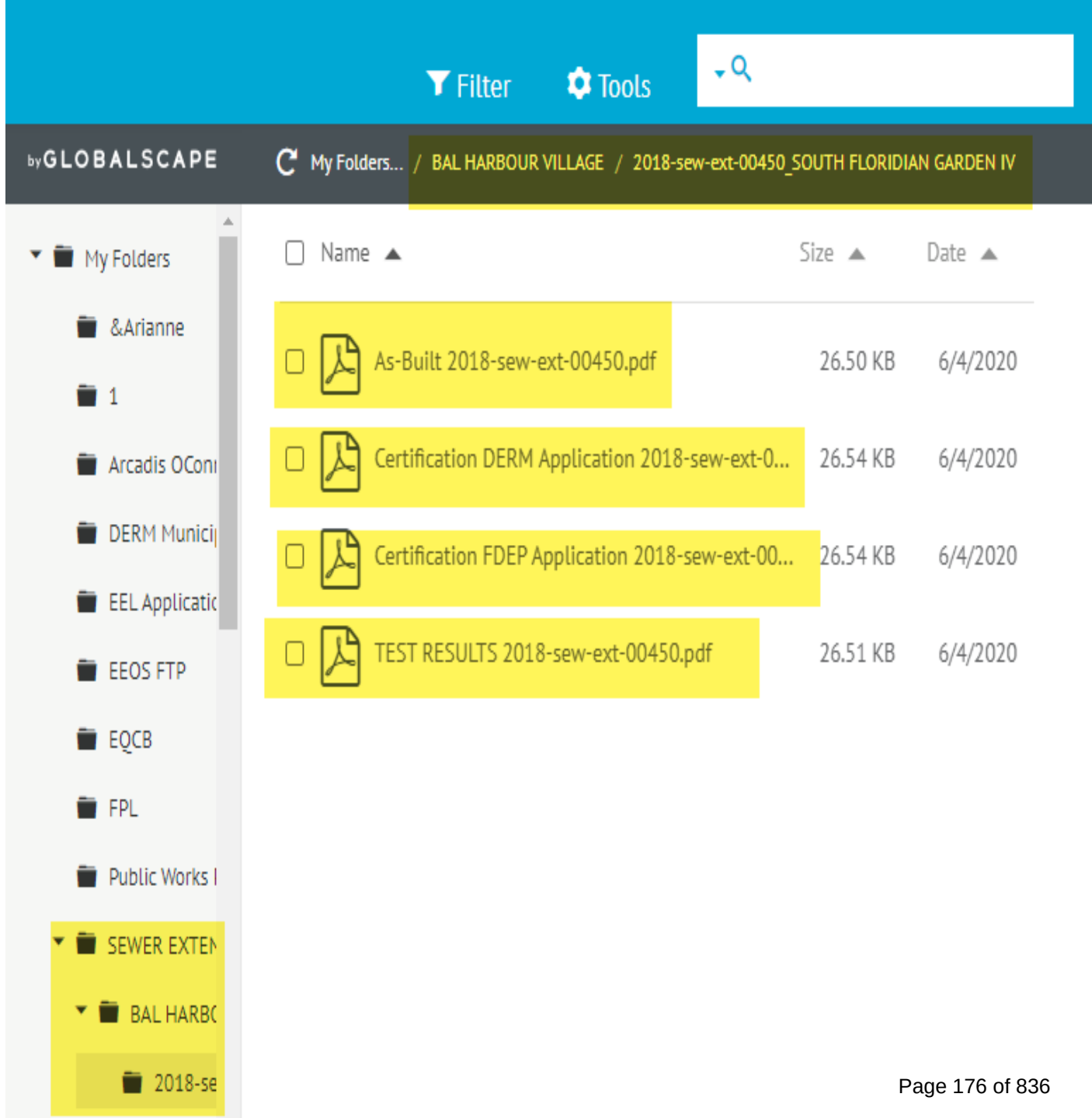

FTP Steps
-Certifications-

9

Send an e-mail notifying the Water and Wastewater Division of RER-DERM of your Certification submittal.

NOTICE that in order to better serve you, your e-mail has to include the following standard data and nomenclature. See next slides.

FTP Steps
-Certifications-

9.1

E-mail has to be addressed to:

Estelle Anorga at Estelle.Anorga@miamidade.gov

Alejandra Villanueva at Alejandra.Villanueva@miamidade.gov

and Carbon Copied (CC) to:

Rosa Areas at Rosa.Areas@miamidade.gov

Galo Pacheco at Galo.Pacheco@miamidade.gov

MIAMI-DADE COUNTY

FTP Steps
-Certifications-

9.2

E-mail Subject Line has to be written as follows:

FTP SE CERTIFICATION Submittal Notification (DERM Permit Number and Project Name as they appear in the permit) Name of the Municipal Utility serving your project.

<u>Example:</u>

FTP SE CERTIFICATION Submittal Notification (2018-SEW-EXT-00450_South Floridian Garden IV) Bal Harbour Village.

FTP Steps
-Certifications-

9.3

E-mail message has to include the folder name of your FTP submittal, the Municipal Utility (folder) name and a description of your CERTIFICATION PROJECT.

FTP Steps
-Certifications-

10

The Water and Wastewater Division of RER-DERM will download the documents and initiate their review.

Engineers of Record and Permit Applicants will be contacted for any follow-up question or comment regarding that project.

MIAMI-DADE COUNTY

FTP SUBMITTAL STEPS

3. FOR RESPONSES TO REQUEST FOR INFORMATION (RFI) LETTERS

FTP Steps
-RFI Responses-

1

Open the following link:

https://sftp2.miamidade.gov/?wtcQID=REVSTVJlY29yZHM6ODdCaU1NVDE

This is a really long link because it contains log in/authentication information. **Access the FTP by directly clicking on the above hyperlink**. Do not try to copy and paste the above address to a web browser because it won't work. If you go to the site and try to save it as a bookmark or favorite, it will truncate the link and you will be denied access and prompted for a password.

FTP Steps
-RFI Responses-

2

Look for the SEWER EXTENSION APPLICATIONS folder

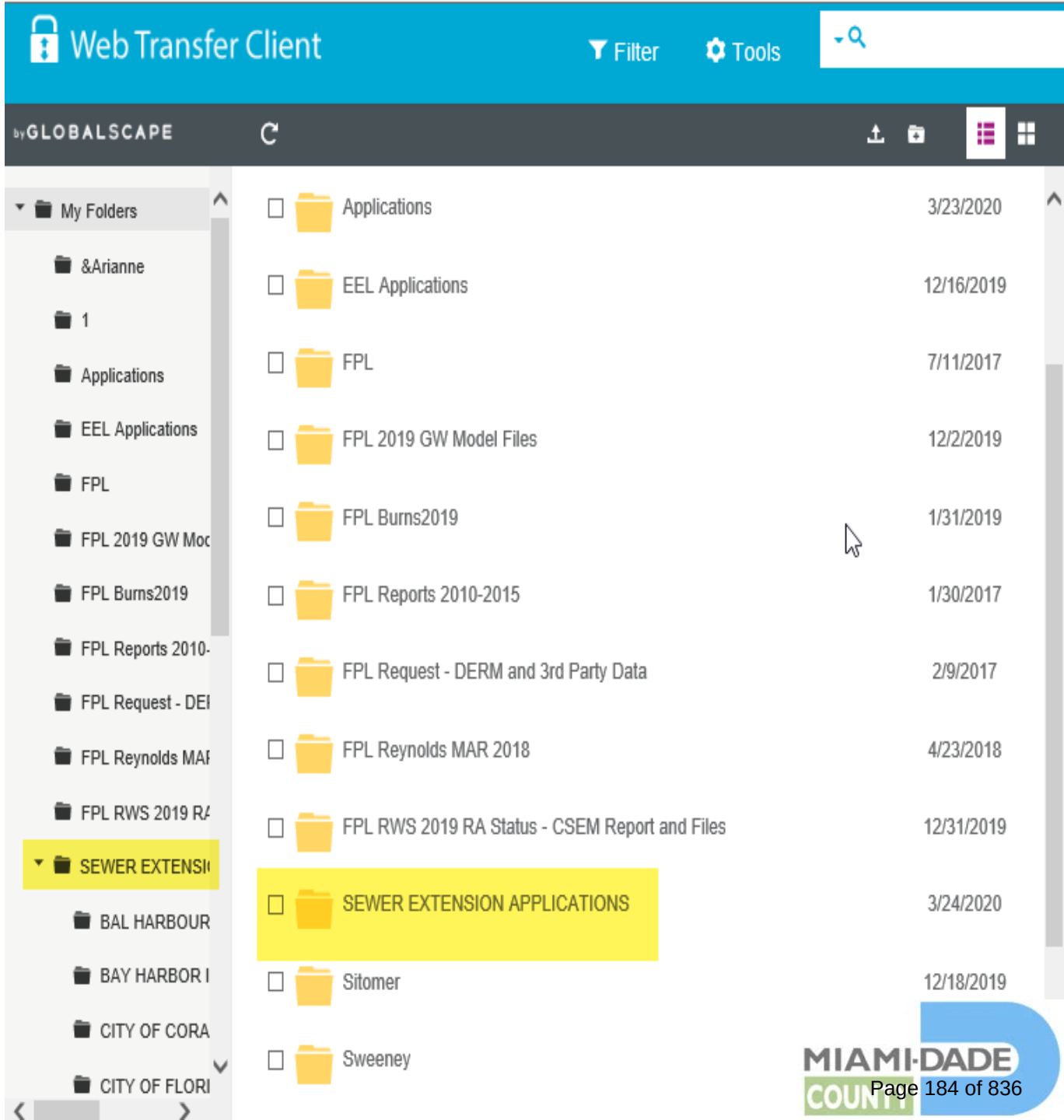

FTP Steps
-RFI Responses-

3

Open the SEWER EXTENSION APPLICATIONS folder and look for your specific Municipal Utility's folder.

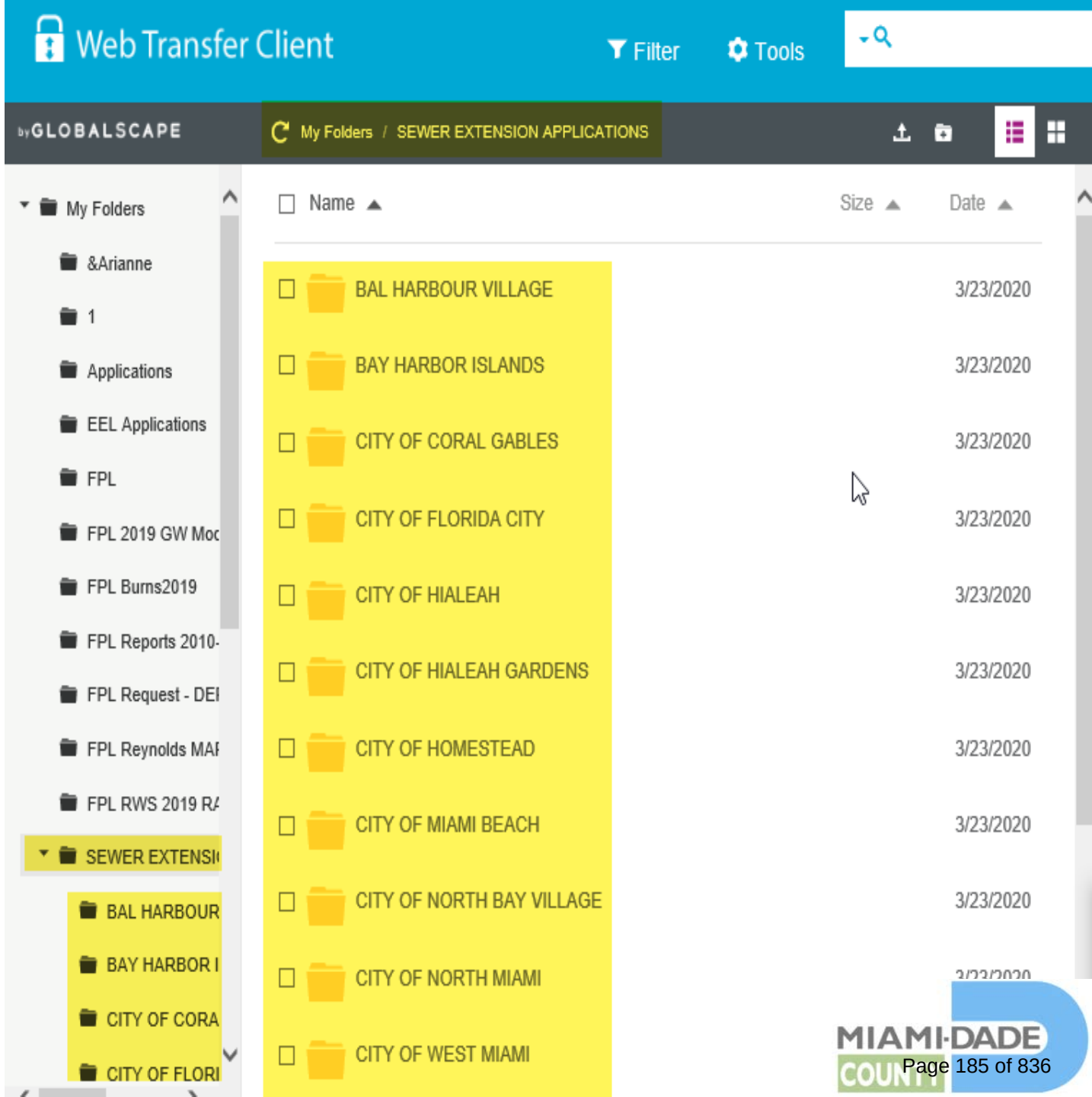

FTP Steps
-RFI Responses-

4

Open your specific Municipal Utility's folder and look for your corresponding

SE PERMIT APPLICATION or

SE CERTIFICATION folder.

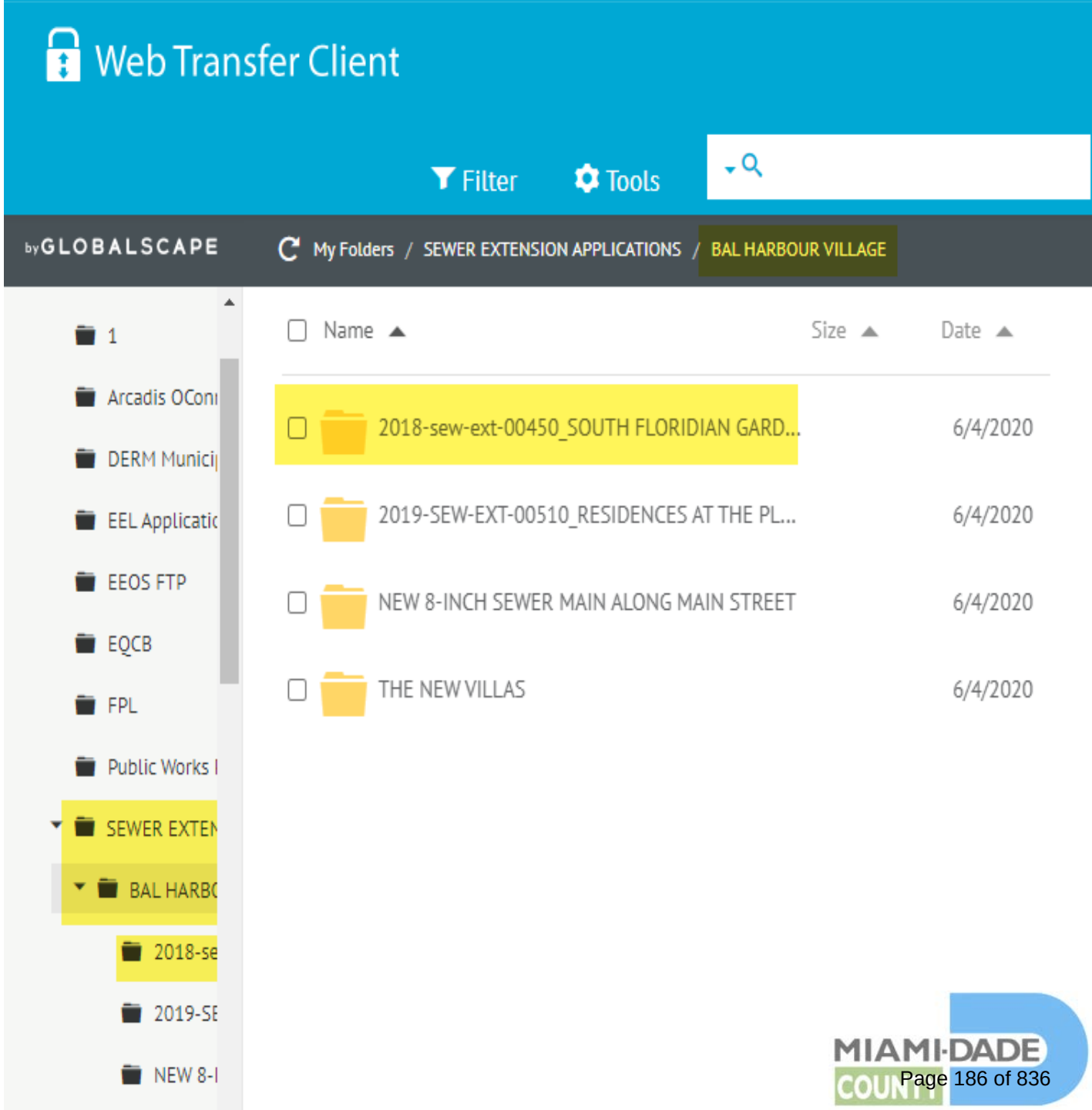

FTP Steps
-RFI Responses-

5

Open that folder and either click on the "File Upload" icon or Drop the items directly to the folder to start uploading your <u>RFI Response Documents</u>.

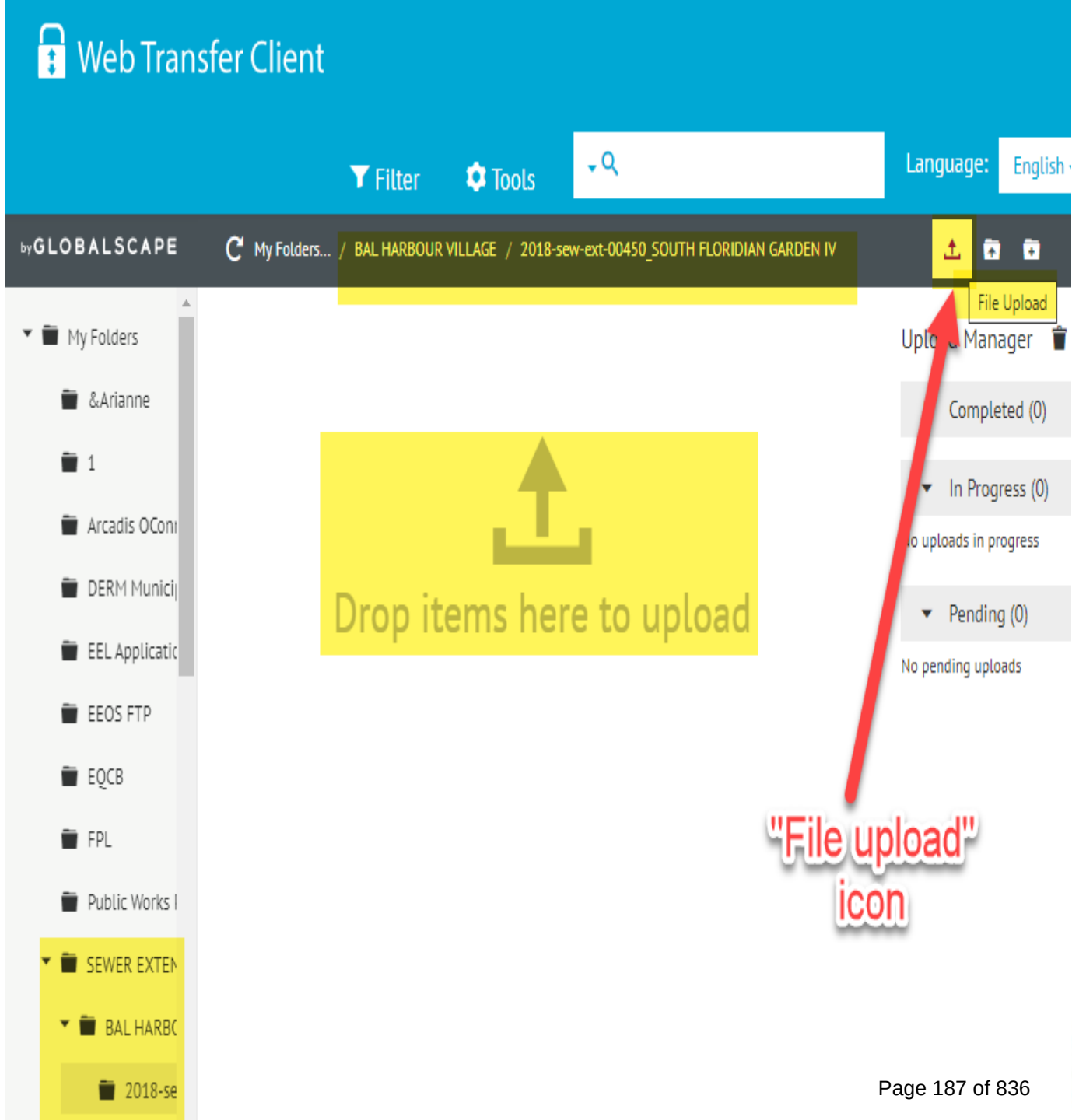

FTP Steps
-RFI Responses-

6

Make sure that you upload all the Response Documents.

<u>You MUST include an RFI Response Letter with individual answers to each and all the RFI items.</u>

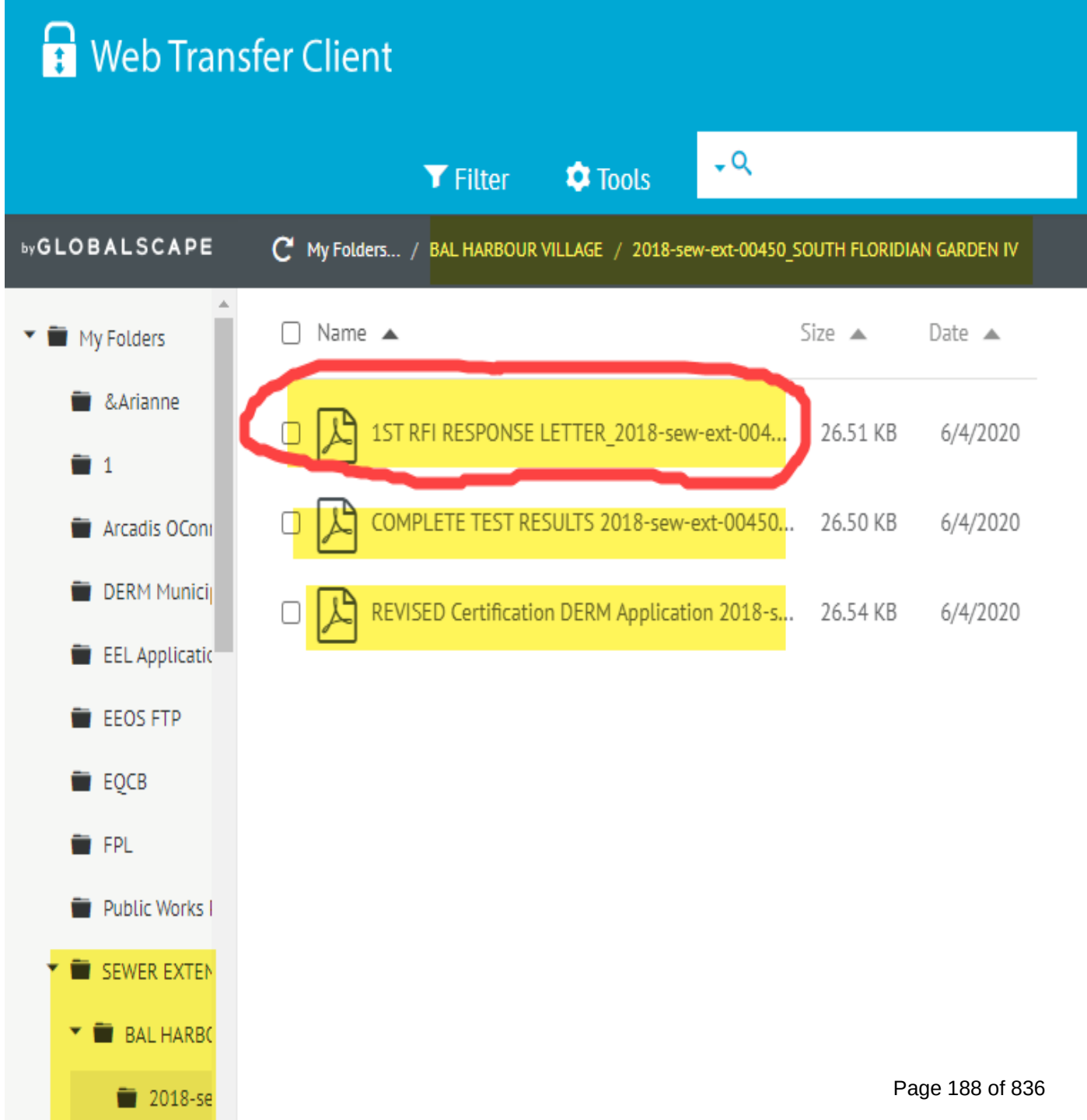

FTP Steps
-RFI Responses-

7

Once all the files have been uploaded for that project, the FTP uploading process has been completed and the web application can be closed.

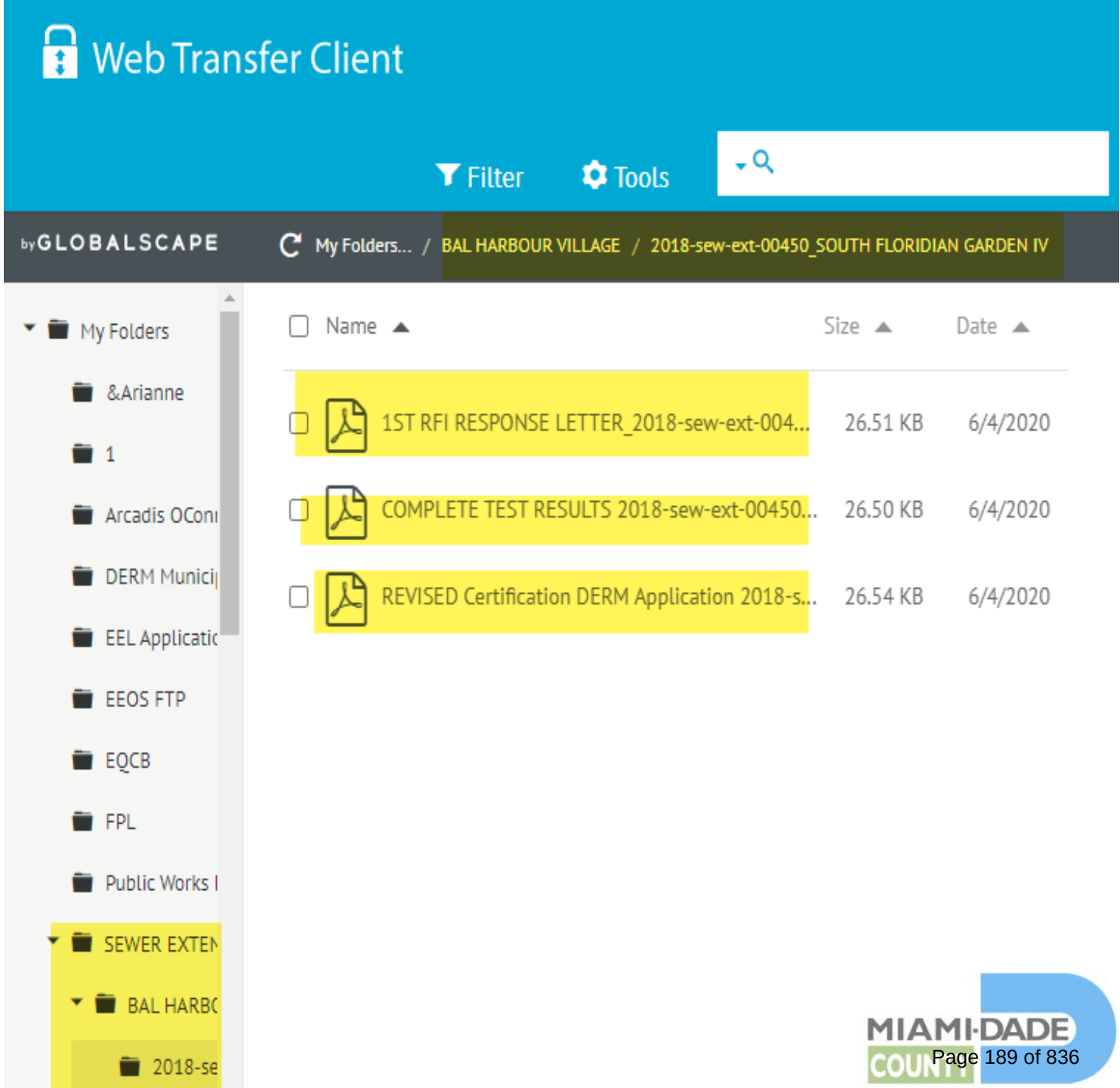

FTP Steps
-RFI Responses-

8

Send an e-mail notifying the Water and Wastewater Division of RER-DERM of your RFI Response submittal.

NOTICE that in order to better serve you, your e-mail has to include the following standard data and nomenclature. See next slides.

FTP Steps
-RFI Responses-

8.1

***E-mail MUST be addressed to the DERM Engineer reviewing your project*.**
Her or his name and e-mail address appear on the RFI letter you received and on the RFI notification e-mail you received from RER-DERM.

In addition, carbon copy it to:

Alejandra Villanueva at Alejandra.Villanueva@miamidade.gov

Estelle Anorga at Estelle.Anorga@miamidade.gov

Rosa Areas at Rosa.Areas@miamidade.gov

The Water & Wastewater Division (W&WWD) of the Department of Regulatory and Economic Resources, Division of Environmental Resources Management (DERM), under delegation by the Florida Department of Environmental Protection (hereby jointly referred to as the Department) hereby acknowledges receipt of an application of permit to construct a wastewater collection/transmission system for the referenced project. Please see the item checked below for the status of said application.

- ☐ This letter constitutes notice that a permit will be required for your project pursuant to Chapter(s) 403.087, Florida Statutes.
- ☐ Your application for permit is COMPLETE as of _____ and processing has begun. You are advised that the Department under Chapter 120, Florida Statutes, must take final action on the application within ninety (90) days unless the time is tolled by administrative hearing.
- ☒ Your application for permit is INCOMPLETE. Please provide the information requested on the attached sheet to the W&WWD within forty-five (45) days of receipt of this letter. Evaluation of your proposed project will be delayed until all requested information has been received. Furthermore, if you fail to respond within the 45 days, you will receive a reminder email message from the Department indicating that an **Intent of Permit Denial Notice** will be issued after 90 days of no response from the date of this RFI.
- ☐ The information provided on _____ in response to the referenced RFI letter was reviewed and deemed INCOMPLETE. Please provide the additional information requested on the attached sheet to the W&WWD within forty-five (45) days of receipt of this letter. Evaluation of your proposed project will be delayed until all requested information has been received.
- ☐ The Domestic Wastewater Collection/Transmission Systems Certification of Completion of Construction for the referenced project remains INCOMPLETE. Please provide the information requested on the attached sheet. Final certification and clearance of this project for service will be delayed until all requested information has been submitted.

If you have any questions regarding the above, please contact the Engineer of the W&WWD at (305) 372-6920 or via email at example@miamidade.gov. When referring to this project, please use the DERM project number indicated above.

Sincerely,

FTP Steps
-RFI Responses-

8.2

E-mail Subject Line has to be written as follows:

FTP SE RFI#X RESPONSE Submittal Notification (DERM Permit Number and Project Name as they appear in the RFI letter you are responding to) Name of the Municipal Utility serving your project.

<u>Example:</u>

FTP SE RFI#1 RESPONSE Submittal Notification (2018-SEW-EXT-00450_South Floridian Garden IV) Bal Harbour Village.

FTP Steps
-RFI Responses-

8.3

E-mail message has to include the folder name of your FTP submittal, the Municipal Utility (folder) name and a brief description of your RFI Response Submittal.

FTP Steps
-RFI Responses-

9

The Water and Wastewater Division of RER-DERM will download the documents and initiate their review.

Engineers of Record and Permit Applicants will be contacted for any follow-up question or comment regarding that project.

MIAMI-DADE COUNTY

IMPORTANT CONSIDERATIONS

I. FOR PERMIT APPLICATIONS

II. FOR CERTIFICATIONS

III. FOR REQUEST FOR INFORMATION SUBMITTALS (RFIs)

IMPORTANT CONSIDERATIONS

I. FOR PERMIT APPLICATIONS

IMPORTANT CONSIDERATIONS

FOR PERMIT APPLICATIONS

I.1. MUNICIPAL UTILITY UPLOADS THE APPROVED PLANS AND PERMIT APPLICATION FORMS.

I.2. EOR/PERMIT APPLICANT MAKE SURE THAT ALL THE REQUIRED DOCUMENTATION HAS BEEN SUBMITTED, INCLUDING THE PERMIT APPLICATION FORMS SIGNED OFF BY THE MUNICIPAL UTILITY, WHEN APPLICABLE, AND BY MIAMI-DADE WASD.

MIAMI-DADE COUNTY

IMPORTANT CONSIDERATIONS

FOR PERMIT APPLICATIONS

I.2.1 BEFORE SUBMITTING PERMIT APPLICATION DOCUMENTS TO RER-DERM, EOR/PERMIT APPLICANT SHALL SECURE PERMIT APPLICATIONS SIGNED BY MIAMI-DADE WASD.

WASD ENGINEERING STAFF PROCESSING THOSE APPLICATIONS :

Francisco Cano
Email: Francisco.Cano@miamidade.gov

Tel: (786) 268-5175

Rafael Rodriguez
E-mail: Rafael.Rodriguez6@miamidade.gov

Tel: (786) 268-5244

MIAMI-DADE COUNTY

IMPORTANT CONSIDERATIONS

FOR PERMIT APPLICATIONS

I.3. THE W&WWD OF RER-DERM RECEIVES SUBMITTAL AND TAKES THE FOLLOWING ACTIONS:

I.3.1 IF IT IS COMPLETE, RER-DERM NOTIFIES THE ENGINEER OF RECORD (EOR) AND PERMIT APPLICANT OF NEEDED PAYMENT AND PROVIDES INVOICE. ONCE EOR OR PERMIT APPLICANT PROVIDES PROOF OF PAYMENT, RER-DERM STARTS TECHNICAL REVIEW OF THE PROJECT.

MIAMI-DADE COUNTY

IMPORTANT CONSIDERATIONS

FOR PERMIT APPLICATIONS

I.3.2 IF IT IS INCOMPLETE, RER-DERM WILL NOTIFY THE ENGINEER OF RECORD (EOR) AND PERMIT APPLICANT ABOUT THE INCOMPLETE SUBMITTAL. NO INVOICE WILL BE PROVIDED NEITHER TECHNICAL REVIEW WILL BE INITIATED UNTIL A COMPLETE APPLICATION HAS BEEN SUBMITTED.

MIAMI-DADE COUNTY

IMPORTANT CONSIDERATIONS

FOR PERMIT APPLICATIONS

I.4. EOR/PERMIT APPLICANT MAKE SURE THAT ALL PENDING DOCUMENTATION HAS BEEN SUBMITTED.

I.5. EOR/PERMIT APPLICANT MAKE SURE THAT PAYMENT HAS BEEN MADE.

I.6. PERMIT APPLICATIONS MUST CLEARLY INCLUDE **E-MAIL ADDRESSES** FOR **EOR AND PERMIT APPLICANT.**

MIAMI-DADE COUNTY

IMPORTANT CONSIDERATIONS

FOR PERMIT APPLICATIONS

I.7. THE W&WWD of RER-DERM EITHER ISSUES A SEWER EXTENSION PERMIT OR A REQUEST FOR INFORMATION LETTER (RFI).

I.8. IF PERMIT IS ISSUED, PERMIT AND APPROVED PLANS WILL BE UPLOADED TO THE RESPECTIVE PROJECT'S FTP FOLDER BY THE W&WWD OF RER-DERM.

MIAMI-DADE COUNTY

IMPORTANT CONSIDERATIONS

FOR PERMIT APPLICATIONS

I.9. IF PERMIT IS ISSUED, THE W&WWD OF RER-DERM WILL SEND AN E-MAIL TO THE EOR AND NOW "PERMITEE" NOTIFYING THEM ABOUT THE ISSUANCE AND AVAILABILITY OF PLANS AND PERMIT.

I.10. IF A REQUEST FOR INFORMATION (RFI) LETTER IS ISSUED, THE PROCESS IS DETAILED IN THE RFI SECTIONS OF THIS DOCUMENT.

MIAMI-DADE COUNTY

IMPORTANT CONSIDERATIONS

II. FOR CERTIFICATIONS

IMPORTANT CONSIDERATIONS

FOR CERTIFICATIONS

II.1. MUNICIPAL UTILITY UPLOADS THE APPROVED AS-BUILT DRAWINGS AND CERTIFICATION DOCUMENTS.

II.2 EOR/PERMITTEE MAKE SURE THAT ALL THE REQUIRED DOCUMENTATION HAS BEEN SUBMITTED, INCLUDING THE FDEP CERTIFICATION FORM SIGNED OFF BY THE MUNICIPAL UTILITY, WHEN APPLICABLE, AND BY MIAMI-DADE WASD.

MIAMI-DADE COUNTY

IMPORTANT CONSIDERATIONS

FOR CERTIFICATIONS

II.2.1 BEFORE SUBMITTING CERTIFICATION DOCUMENTS TO RER-DERM, EOR/PERMITTEE SHALL SECURE FDEP CERTIFICATION FORM SIGNED BY MIAMI-DADE WASD.

WASD ENGINEERING STAFF PROCESSING FDEP CERTIFICATION FORMS:

Francisco Cano
Email: Francisco.Cano@miamidade.gov

Tel: (786) 268-5175

Rafael Rodriguez
E-mail: Rafael.Rodriguez6@miamidade.gov

Tel: (786) 268-5244

MIAMI-DADE COUNTY

IMPORTANT CONSIDERATIONS

FOR CERTIFICATIONS

II.3. THE W&WWD OF RER-DERM RECEIVES SUBMITTAL AND TAKES THE FOLLOWING ACTIONS:

II.3.1 IF IT IS COMPLETE,

RER-DERM NOTIFIES THE ENGINEER OF RECORD (EOR) AND PERMITTEE OF NEEDED PAYMENT AND PROVIDES INVOICE. ONCE EOR OR PERMITTEE PROVIDES PROOF OF PAYMENT, RER-DERM STARTS TECHNICAL REVIEW OF THE CERTIFICATION APPLICATION.

MIAMI-DADE COUNTY

IMPORTANT CONSIDERATIONS

FOR CERTIFICATIONS

II.3.2 IF IT IS INCOMPLETE, RER-DERM WILL NOTIFY THE ENGINEER OF RECORD (EOR) AND PERMITTEE ABOUT THE INCOMPLETE SUBMITTAL. NO INVOICE WILL BE PROVIDED NEITHER TECHNICAL REVIEW WILL BE INITIATED UNTIL A COMPLETE APPLICATION HAS BEEN SUBMITTED.

MIAMI-DADE COUNTY

IMPORTANT CONSIDERATIONS

FOR CERTIFICATIONS

II.4. EOR/PERMITTEE MAKE SURE THAT ALL PENDING DOCUMENTATION HAS BEEN SUBMITTED.

II.5. EOR/PERMITTEE MAKE SURE THAT PAYMENT HAS BEEN MADE.

II.6. FDEP CERTIFICATION FORM MUST CLEARLY INCLUDE **E-MAIL ADDRESSES** FOR **EOR AND PERMITTEE.**

MIAMI-DADE COUNTY

IMPORTANT CONSIDERATIONS

FOR CERTIFICATIONS

II.7. THE W&WWD of RER-DERM EITHER ISSUES A CERTIFICATION LETTER OR A REQUEST FOR INFORMATION LETTER (RFI).

II.8. IF CERTIFICATION LETTER IS ISSUED, IT WILL BE E-MAILED TO THE MUNICIPAL UTILITY, ENGINEER OF RECORD AND PERMITTEE.

MIAMI-DADE COUNTY

IMPORTANT CONSIDERATIONS

FOR CERTIFICATIONS

II.9. IF A REQUEST FOR INFORMATION (RFI) LETTER IS ISSUED, THE PROCESS IS DETAILED IN THE RFI SECTIONS OF THIS DOCUMENT.

IMPORTANT CONSIDERATIONS

III. FOR REQUEST FOR INFORMATION SUBMITTALS (RFIs)

IMPORTANT CONSIDERATIONS

FOR

REQUEST FOR INFORMATION SUBMITTALS (RFIs)

III.1. WHEN THE W&WWD of RER-DERM ISSUES A REQUEST FOR INFORMATION LETTER (RFI), THIS WILL BE E-MAILED BY THE DERM ENGINEER REVIEWING THE PROJECT TO THE EOR AND PERMIT APPLICANT/PERMITTEE.

III.2. EOR AND PERMIT APPLICANT/PERMITTEE MUST FIRST ADDRESS ALL THE ITEMS OF THE RFI AND ONLY THEN UPLOAD A COMPLETE RFI RESPONSE TO THEIR PROJECT'S FTP FOLDER.

MIAMI-DADE COUNTY

IMPORTANT CONSIDERATIONS

FOR

REQUEST FOR INFORMATION SUBMITTALS (RFIs)

III.3. EOR AND PERMIT APPLICANT/PERMITTEE MUST UPLOAD AS PART OF THEIR COMPLETE RESPONSE, A "RESPONSE LETTER" WITH INDIVIDUAL ANSWERS TO EACH AND ALL THE RFI ITEMS.

III.4. ONCE A COMPLETE RESPONSE HAS BEEN UPLOADED TO THE FTP FOLDER, EOR OR PERMIT APPLICANT/PERMITTEE MUST NOTIFY RER-DERM OF IT, VIA E-MAIL.

MIAMI-DADE COUNTY

IMPORTANT CONSIDERATIONS

FOR

REQUEST FOR INFORMATION SUBMITTALS (RFIs)

III.5. THE W&WWD OF RER-DERM REVIEWS THE RFI RESPONSE SUBMITTAL AND EITHER ISSUES A SEWER EXTENSION PERMIT/CERTIFICATION LETTER OR ANOTHER REQUEST FOR INFORMATION LETTER (RFI).

III.6. IF PERMIT IS ISSUED, PERMIT AND APPROVED PLANS WILL BE UPLOADED TO THE RESPECTIVE PROJECT'S FTP FOLDER BY THE W&WWD OF RER-DERM.

MIAMI-DADE COUNTY

IMPORTANT CONSIDERATIONS

FOR

REQUEST FOR INFORMATION SUBMITTALS (RFIs)

III.7. IF PERMIT IS ISSUED, THE W&WWD OF RER-DERM WILL E-MAIL THE EOR AND PERMITTEE NOTIFYING THEM ABOUT THE ISSUANCE AND AVAILABILITY OF PLANS AND PERMIT OR CERTIFICATION LETTER.

III.8. IF A CERTIFICATION LETTER IS ISSUED, IT WILL BE E-MAILED TO THE MUNICIPAL UTILITY, ENGINEER OF RECORD AND PERMITTEE.

MIAMI-DADE COUNTY

IMPORTANT CONSIDERATIONS

FOR REQUEST FOR INFORMATION SUBMITTALS (RFIs)

III.9. IF A NEW REQUEST FOR INFORMATION (RFI) LETTER IS ISSUED, THE RFI PROCESS REPEATS ON THE SAME WAY DESCRIBED ABOVE.

III.10. HOWEVER, IF MORE THAN ONE REQUEST FOR INFORMATION (RFI) LETTER IS ISSUED, ADDITIONAL REVIEW FEES WILL BE CHARGED TO THE EOR AND PERMIT APPLICANT/PERMITTEE FOR EACH ADDITIONAL REVIEW PERFORMED BY THE W&WWD OF RER-DERM

MIAMI-DADE COUNTY

IMPORTANT CONSIDERATIONS

FOR

REQUEST FOR INFORMATION SUBMITTALS (RFIs)

III.11. IF A UTILITY NEEDS TO RE-STAMP PLANS AND REVISE FORMS AS PART OF AN RFI RESPONSE, THEN UTILITY UPLOADS RE-STAMPED AND REVISED DOCUMENTS TO FTP.

III.12. EOR AND PERMIT APPLICANT/PERMITTEE MAKE SURE THAT ALL THE REQUIRED DOCUMENTATION IS BEING SUBMITTED.

MIAMI-DADE COUNTY

For any questions or comments please contact the following staff:

Rosa Areas at Rosa.Areas@miamidade.gov

Galo Pacheco at Galo.Pacheco@miamidade.gov

Carlos Hernandez at Carlos.Hernandez3@miamidade.gov

EXHIBIT “J”

CONSENT AGREEMENT COMPLIANCE REQUIREMENTS AND DEADLINES

CONSENT AGREEMENT PARAGRAPH	CONSENT AGREEMENT REQUIREMENT	DUE DATE BASED ON THE EFFECTIVE DATE OF THE CONSENT AGREEMENT	SUBMIT ITEM DUE TO:
21	SEE APPENDICES 2 & 3	SEE APPENDICES 2 & 3	PSO@miamidade.gov
15	USF PAYMENT OF $130,995.21	MONTHLY	MIAMI-DADE COUNTY WATER & SEWER DEPARTMENT
26	PAYMENT OF $1,051.47 IN ADMINISTRATIVE FEES	UPON EXECUTION	DERM Cashier
16	LINK TO DERM PORTAL & GUIDANCE DOCUMENTS ON WEBSITE	15 days	Tricia.Kong@miamidade.gov
19	QUARTERLY SUMMARY REPORTS	30 days	Tricia.Kong@miamidade.gov
18	ENFORCEMENT WITH THE CITY OR HAS SUBMITTED REQUIRED DOCUMENTATION TO OBTAIN DERM	60 days	Tricia.Kong@miamidade.gov
20	BUDGET REPORT	60 days	PSO@miamidade.gov & Tricia.Kong@miamidade.gov
21	1ST QUARTERLY BASIN COMPLIANCE STATUS REPORT	60 days	PSO@miamidade.gov
22	COMPLETE CERTIFICATION PACKAGE FOR 2014-SEW-EXT-0127 & 2017-SEW-EXT-00191	90 days	see Exhibit I
27	PENALTY PAYMENT OF $40,000	90 days	DERM Cashier
28	IN-KIND PROJECT PROPOSAL TO OFFSET THE $40,000 PENALTY, EQUALING OR EXCEEDING 150% OF PENALTY	90 days	Tricia.Kong@miamidade.gov
17	PREDEPLOYMENT TESTING OF INTAKE SYSTEM	3/22/2024	Tricia.Kong@miamidade.gov
17	FULLY DEPLOYED & FUNCTIONAL INTAKE SYSTEM	24 months	Tricia.Kong@miamidade.gov

Sponsored by: Interim City Manager

RESOLUTION NO. _____

A RESOLUTION OF THE CITY COMMISSION OF THE CITY OF OPA-LOCKA, FLORIDA, AUTHORIZING THE INTERIM CITY MANAGER TO ISSUE A REQUEST FOR PROPOSALS (RFP) FOR A QUALIFIED CONTRACTOR FOR THE CONSTRUCTION OF DRINKING WATER LINE IMPROVEMENTS FOR THE NORTHERN DISTRICT PORTION OF THE CITY'S WATER SERVICE AREA; PROVIDING FOR INCORPORATION OF RECITALS; PROVIDING FOR AN EFFECTIVE DATE.

WHEREAS, the City of Opa-Locka ("City") provides water utility services for a portion of the City of Miami Gardens; and

WHEREAS, the existing water mains within the subject location are old, subject to failure and require replacement. As such, the City of Opa-Locka is proposing to implement the Northern District Water Main Improvements (Phase 1) project to serve the existing commercial properties within this portion of the City's water service area; and

WHEREAS, this project will enable the City to upgrade and replace the drinking water infrastructure of the section designated as Opa-Locka Northern District Phase 1 to ensure the continued reliable provision of safe drinking water; and

WHEREAS, improvements are necessary to upgrade and rehabilitate this section of the water system to prevent the threat of contamination due to the aging of the infrastructure system; and

WHEREAS, the intent of this resolution is to issue a request for Construction Services to upgrade and rehabilitate the Northern District section of the water system, with a budget not to exceed Eight Hundred Thousand Dollars ($800,000.00), for completion of the project, including all costs and not limited to special circumstances and/or additional services or tasks related to the project; and

WHEREAS, the Interim City Manager recommends that the City Commission authorize the issuance of a Request For Proposals (RFP) for the construction of drinking water line improvements for the Northern District portion of the City's water service area; and

WHEREAS, in 2021, the City previously entered into a design services contract with HW Lochner, Inc. for the design and engineering services for the improvements of water infrastructure located in the aforementioned section for a total amount of One Hundred Sixty-Five Thousand Dollars ($165,000.00), including permit fees. This contract includes overseeing the RFP bidding process and construction management phases; and

WHEREAS, the construction of the project is expected to have a duration of approximately five (5) months from the Notice to Proceed; and

WHEREAS, this project will enable the City to upgrade and replace the drinking water infrastructure of the section designated as Opa-Locka Northern District Phase 1 to ensure the continued reliable provision of safe drinking water; and

WHEREAS, the Interim City Manager recommends that the City Commission further authorize spending of up to Three Thousand Dollars ($3,000.00) for advertising purposes, if deemed necessary; and

WHEREAS, the City Commission finds it in the best interest of the City and its residents to authorize the Interim City Manager to issue an RFP, attached hereto as Exhibit "A", for the construction of drinking water line improvements for the Northern District portion of the City's water service area and to further authorize spending of up to Three Thousand Dollars ($3,000.00) for advertising purposes, if deemed necessary.

NOW THEREFORE BE IT RESOLVED THAT THE CITY COMMISSION OF THE CITY OF OPA LOCKA, FLORIDA:

Section 1. The recitals to the preamble herein are incorporated by reference.

Section 2. The City Commission of the City of Opa-Locka hereby authorizes the Interim City Manager to issue Request for Proposals (RFP), attached hereto as Exhibit "A", for the provision of a qualified contractor for the construction of drinking water line improvements for the Northern District portion of the City's water service area and to further authorize spending of up to Three Thousand Dollars ($3,000.00) for advertising purposes, if deemed necessary.

Section 3. Sections of this Resolution may be renumbered or re-lettered and corrections of typographical errors, which do not affect the intent of this Resolution may be authorized by the Interim City Manager, following review by the City Attorney, without need of public hearing, by filing a corrected copy of same with the City Clerk.

Section 4. This Resolution shall take effect upon the adoption and is subject to the approval of the Governor or Governor's Designee.

PASSED AND ADOPTED this _____ day of _____, 2023.

_____
John H. Taylor, Mayor

ATTEST:

_____
Joanna Flores, City Clerk

APPROVED AS TO FORM AND
LEGAL SUFFICIENCY:

_____
Burnadette Norris-Weeks, P.A.
City Attorney

Moved by: _____

Seconded by: _____

VOTE:

Commissioner Bass	_____ (Yes)	_____ (No)
Commissioner Kelley	_____ (Yes)	_____ (No)
Commissioner Williams	_____ (Yes)	_____ (No)
Vice Mayor Ervin	_____ (Yes)	_____ (No)
Mayor Taylor	_____ (Yes)	_____ (No)

DocuSign Envelope ID: E770552E-CCE3-4CF2-87BC-95E6EED90CC2

City of Opa-locka
Agenda Cover Memo

Department Manager:	Adelina Gross			**Department Director Signature:**	Adelina Gross		
Interim City Manager:	Darvin Williams			**CM Signature:**	DocuSigned by: Darvin Williams C46C07C1E8DE492...		
Commission Meeting Date:	*10/25/2023*		**Item Type:** *(Enter X in box)*	**Resolution**	**Ordinance**		**Other**
				X			
Fiscal Impact: *(Enter X in box)*	**Yes**	**No**	**Ordinance Reading:** *(Enter X in box)*		**1st Reading**		**2nd Reading**
	X		**Public Hearing:** *(Enter X in box)*		**Yes**	**No**	**Yes** / **No**
						X	X
Funding Source: *Account#* :	*(Enter Fund & Dept.)* Ex: See Financial Impact Section		**Advertising Requirement:** *(Enter X in box)*		**Yes**		**No**
							X
Contract/P.O. Required: *(Enter X in box)*	**Yes**	**No**	**RFP/RFQ/Bid#:**				
	X						
Strategic Plan Related *(Enter X in box)*	**Yes**	**No**	**Strategic Plan Priority Area:**		**Strategic Plan Obj./Strategy:** *(list the specific objective/strategy this item will address)*		
	X		**Enhance Organizational** ■ **Bus. & Economic Dev** □ **Public Safety** ■ **Quality of Education** □ **Qual. of Life & City Image** ■ **Communication** □				
Sponsor Name	City Manager		**Department:** Capital Improvements Program		City Manager		

Short Title:

RFP Opa-locka Northern District Water Improvements Construction
Project No. TBA

Staff Summary:

The City of Opa-Locka provides water utility services for a portion of the City of Miami Gardens. The existing water mains within the subject location are old, subject to failure and require replacement. As such, the City of Opa-Locka is proposing to implement the Northern District Water Main Improvements (Phase 1) project to serve the existing commercial properties within this portion of the City's water service area.

This project will enable the City to upgrade and replace the drinking water infrastructure of the section designated as Opa-locka Northern District Phase 1 to ensure the continued reliable provision

of safe drinking water. Improvements are necessary to upgrade and rehabilitate this section of the water system to prevent the threat of contamination due to the aging of the infrastructure system.

The intent of this item is to issue a request for Construction Services to upgrade and rehabilitate this section of the water system with a budget not to exceed $800,000 for completion of the project, including all costs and not limited to special circumstances and/or additional services or tasks related to the project.

In 2021 the City entered into a design services contract with HW Lochner for the design and engineering services for the improvements of water infrastructure located in the aforementioned section for a total amount of $165,000, including permit fees. This contract includes overseeing the RFP bidding process and construction management phases.

The construction of the project is expected to have a duration of approximately 5 months from the Notice to Proceed.

Financial Impact: To ensure broad dissemination of this RFP, staff may choose to use publications in addition to electronic distribution at a cost not to exceed $3,000. This advertising expense will be charged to Non-Department, Other Advertising (19-515491) which currently has a budget of $25,000.

Proposed Action:

Staff recommends the issuance of a Request for Proposals (RFP) for the construction of drinking water line improvements for the Northern District portion of the City's water service area with advertising expense associated with the RFP to not exceed $3,000.

Attachment:

1. Agenda
2. Technical Specifications
3. Bid Form
4. Design Permit Plan Set
5. Engineer's Opinion of Probable Cost

MIAMI GARDENS WATER MAIN IMPROVEMENTS

OFFICE OF PUBLIC WORKS, CITY OF OPA-LOCKA

MAYOR
VERONICA WILLIAMS

VICE MAYOR
JOHN H. TAYLOR JR.

COMMISSIONER
DR. SHERELEAN BASS

COMMISSIONER
CHRIS DAVIS

COMMISSIONER
AUDREY DOMINGUEZ

SPACE RESERVED FOR AGENCY APPROVAL STAMP

PROJECT LOCATION

PROJECT LOCATION

PROJECT LOCATION

LOCATION MAP
(SECTION 16, TOWNSHIP 52 SOUTH, RANGE 41 EAST)
Scale: N.T.S.

MOHAMMED SHARIFUZZAMAN
LICENSE
No 67640
STATE OF
FLORIDA
PROFESSIONAL ENGINEER

THIS ITEM HAS BEEN DIGITALLY SIGNED AND SEALED BY MOHAMMED SHARIFUZZAMAN, P.E. ON THE DATE ADJACENT TO SEAL:

Mohammed Sharifuzzaman
Digitally signed by Mohammed Sharifuzzaman
Date: 2023.02.10 11:09:14 -05'00'

PRINTED COPIES OF THIS DOCUMENT ARE NOT CONSIDERED SIGNED AND SEALED AND THE SIGNATURE MUST BE VERIFIED ON ANY ELECTRONIC COPIES.

INDEX OF SHEETS

SHEET NO.	SHEET TITLE
1	COVER SHEET
P1	KEY MAP
C1–C12	WATER PLAN
C13–C18	GENERAL DETAILS
C19	GENERAL NOTES AND DETAILS
C20–C23	WATER MAIN PROFILE

FOR PERMITS

PREPARED BY:
MOHAMMED SHARIFUZZAMAN, P.E.
P.E. LICENSE NUMBER 67640
H.W.LOCHNER, INC
8750 NW 36th STREET, SUITE 360
MIAMI, FL 33178
PHONE: 305.503.9873
FAX: 305.503.9882

Always call 811 two full business days before you dig
Sunshine811.com

No.	REVISIONS – SUBMITTALS	DATE
0	XX	00/00/00

SHEET No. COVER
PAGE No.1

THE OFFICIAL RECORD OF THIS SHEET IS THE ELECTRONIC FILE DIGITALLY SIGNED AND SEALED UNDER RULE 61G15-23.004, F.A.C.

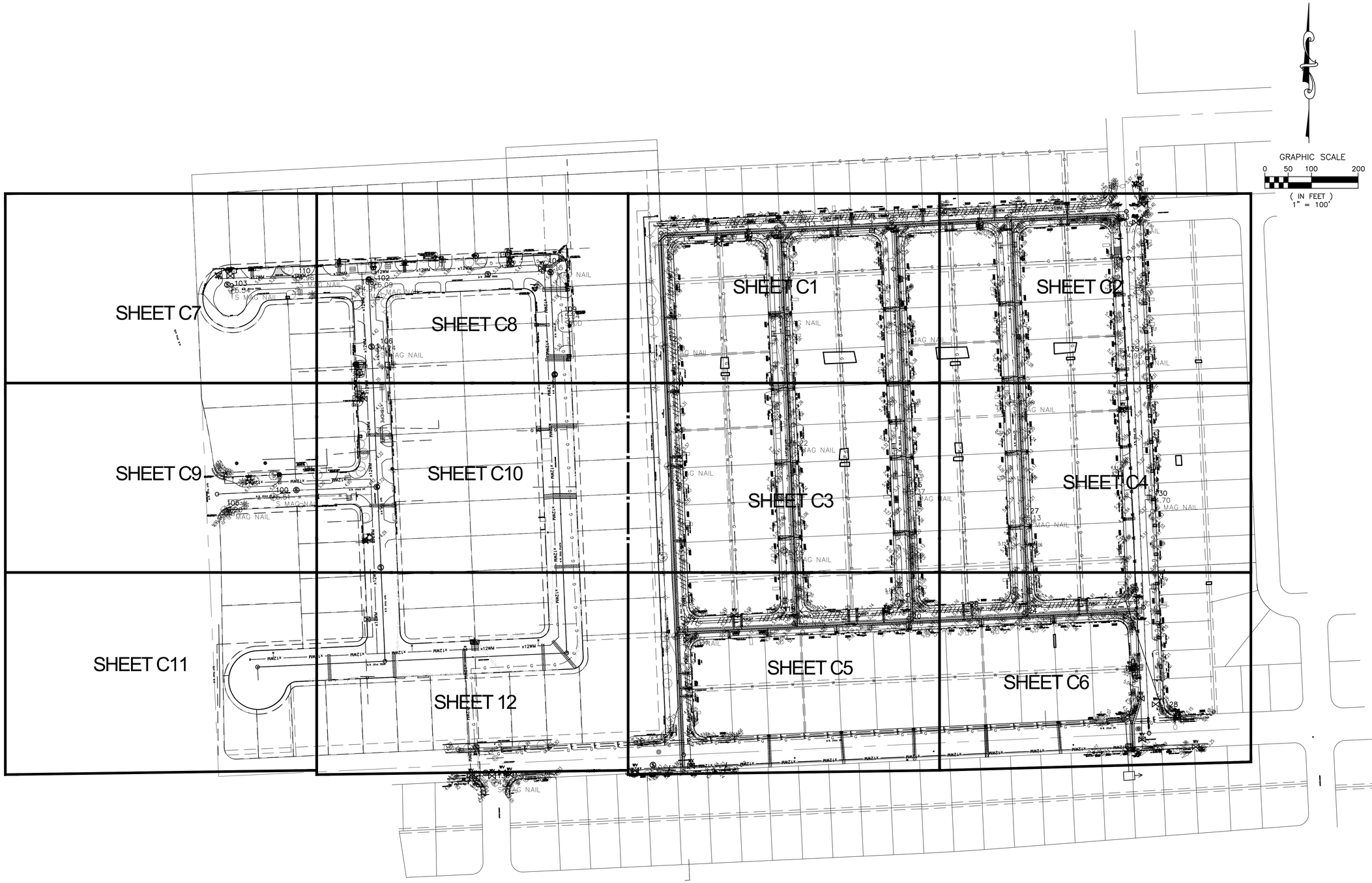

FOR PERMITS

H. W. LOCHNER, INC.
CONSULTING ENGINEERS AND PLANNERS
8750 NW 36th STREET - SUITE 360
MIAMI, FLORIDA - 33178

MIAMI GARDENS WATER MAIN IMPROVEMENTS
CITY OF OPA-LOCKA

KEY MAP

NO	DATE	REVISION	BY	NO	DATE	REVISION	BY
--	--	.	--				

MOHAMMED SHARIFUZZAMAN, P.E.
STATE OF FLORIDA PROFESSIONAL ENGINEER
LICENSE NO. 67640

DATE: APR 22, 2022

SCALE: AS SHOWN

PROJECT No: 19356

SHEET: P1

File Name: I:\MIA\PRJ\000019356\700_CADD\Water Plan.dwg - (Plotted by: Sharifuzzaman, Mohammed on Friday, February 10, 2023 9:59:57 AM)

THE OFFICIAL RECORD OF THIS SHEET IS THE ELECTRONIC FILE DIGITALLY SIGNED AND SEALED UNDER RULE 61G15-23.004, F.A.C.

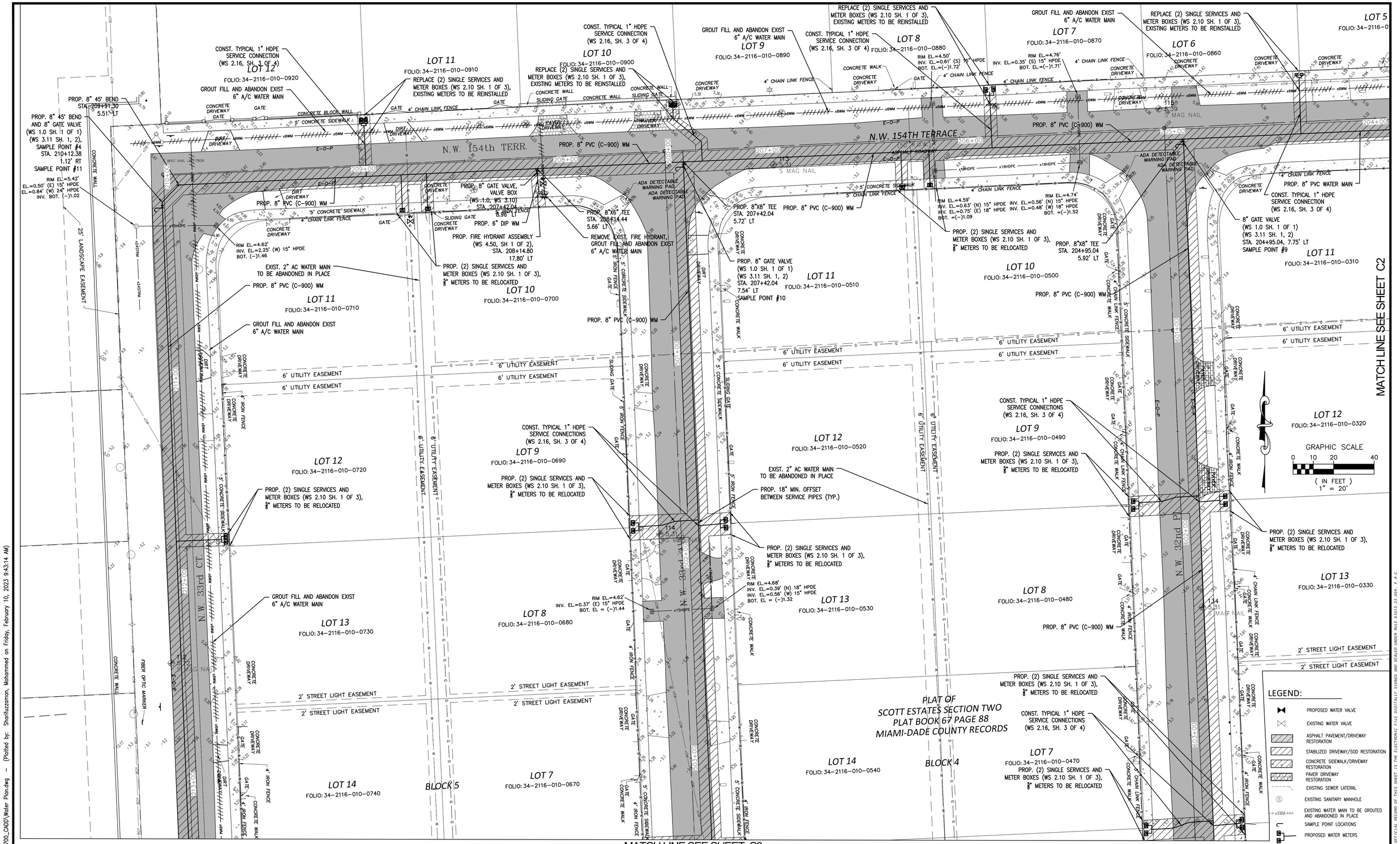

FOR PERMITS

H. W. LOCHNER, INC.
CONSULTING ENGINEERS AND PLANNERS
8750 NW 36th STREET - SUITE 360
MIAMI, FLORIDA - 33178

MIAMI GARDENS WATER MAIN IMPROVEMENTS

CITY OF OPA-LOCKA

WATER PLAN

NO	DATE	REVISION	BY	NO	DATE	REVISION	BY
–	–	.	–				

MOHAMMED SHARIFUZZAMAN, P.E.
STATE OF FLORIDA PROFESSIONAL ENGINEER
LICENSE NO. 67640

DATE: APR 20, 2022

SCALE: AS SHOWN

PROJECT No: 19356

SHEET: C1

File Name: I:\MIA\PRJ\000019356\700_CADD\Water Plan.dwg - (Plotted by: Sharifuzzaman, Mohammed on Friday, February 10, 2023 9:43:14 AM)

THE OFFICIAL RECORD OF THIS SHEET IS THE ELECTRONIC FILE DIGITALLY SIGNED AND SEALED UNDER RULE 61G15-23.004, F.A.C.

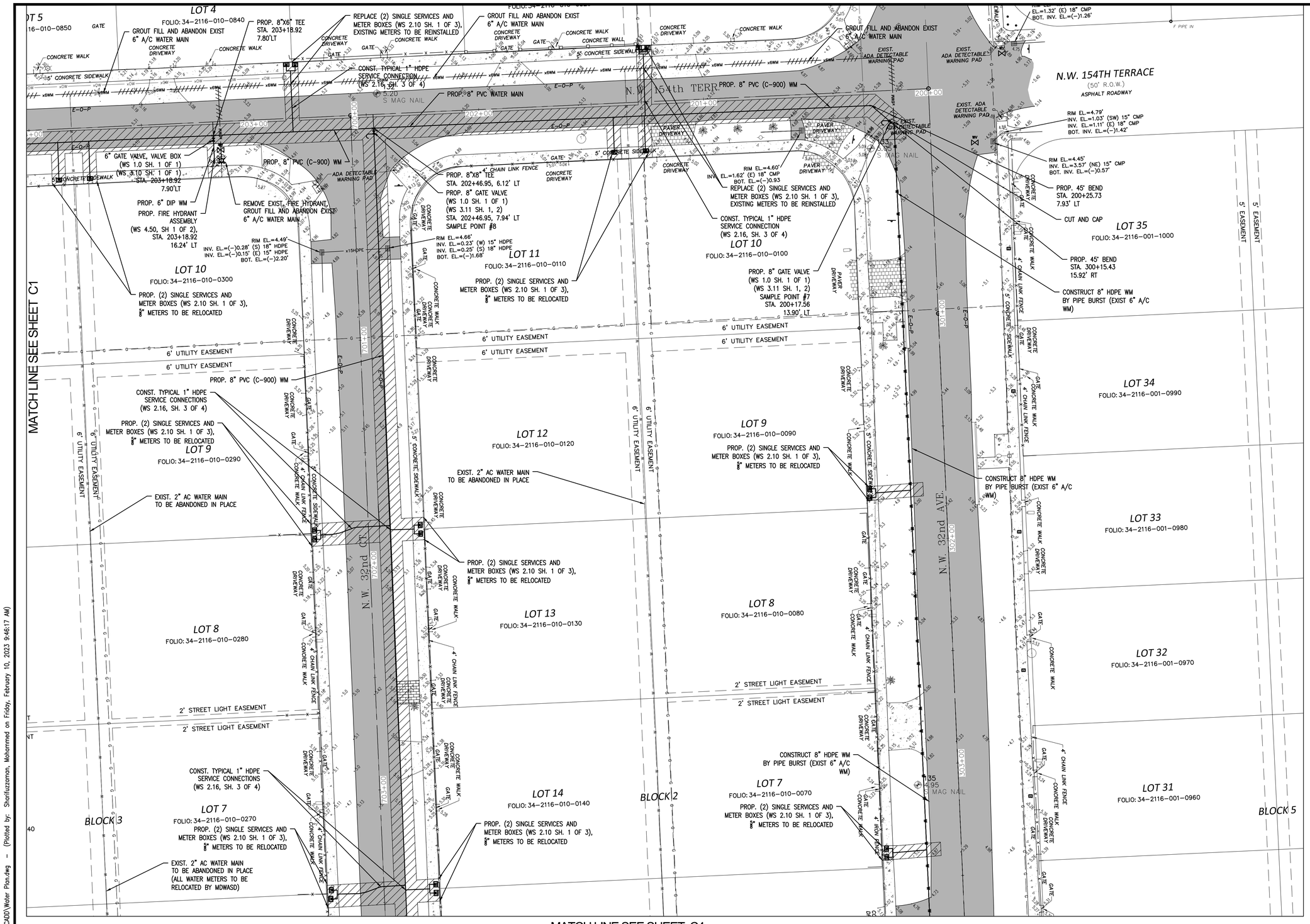

FOR PERMITS

H. W. LOCHNER, INC.
CONSULTING ENGINEERS AND PLANNERS
8750 NW 36th STREET - SUITE 360
MIAMI, FLORIDA - 33178

MIAMI GARDENS WATER MAIN IMPROVEMENTS
CITY OF OPA-LOCKA

WATER PLAN

NO	DATE	REVISION	BY	NO	DATE	REVISION	BY
–	–	.	–				

MOHAMMED SHARIFUZZAMAN, P.E.
STATE OF FLORIDA PROFESSIONAL ENGINEER
LICENSE NO. 67640

DATE: APR 22, 2022

SCALE: AS SHOWN

PROJECT No: 19356

SHEET: C2

File Name: L:\MIA\PRJ\00019356\700_CADD\Water Plan.dwg - (Plotted by: Sharifuzzaman, Mohammed on Friday, February 10, 2023 9:46:17 AM)

THE OFFICIAL RECORD OF THIS SHEET IS THE ELECTRONIC FILE DIGITALLY SIGNED AND SEALED UNDER RULE 61G15-23.004, F.A.C.

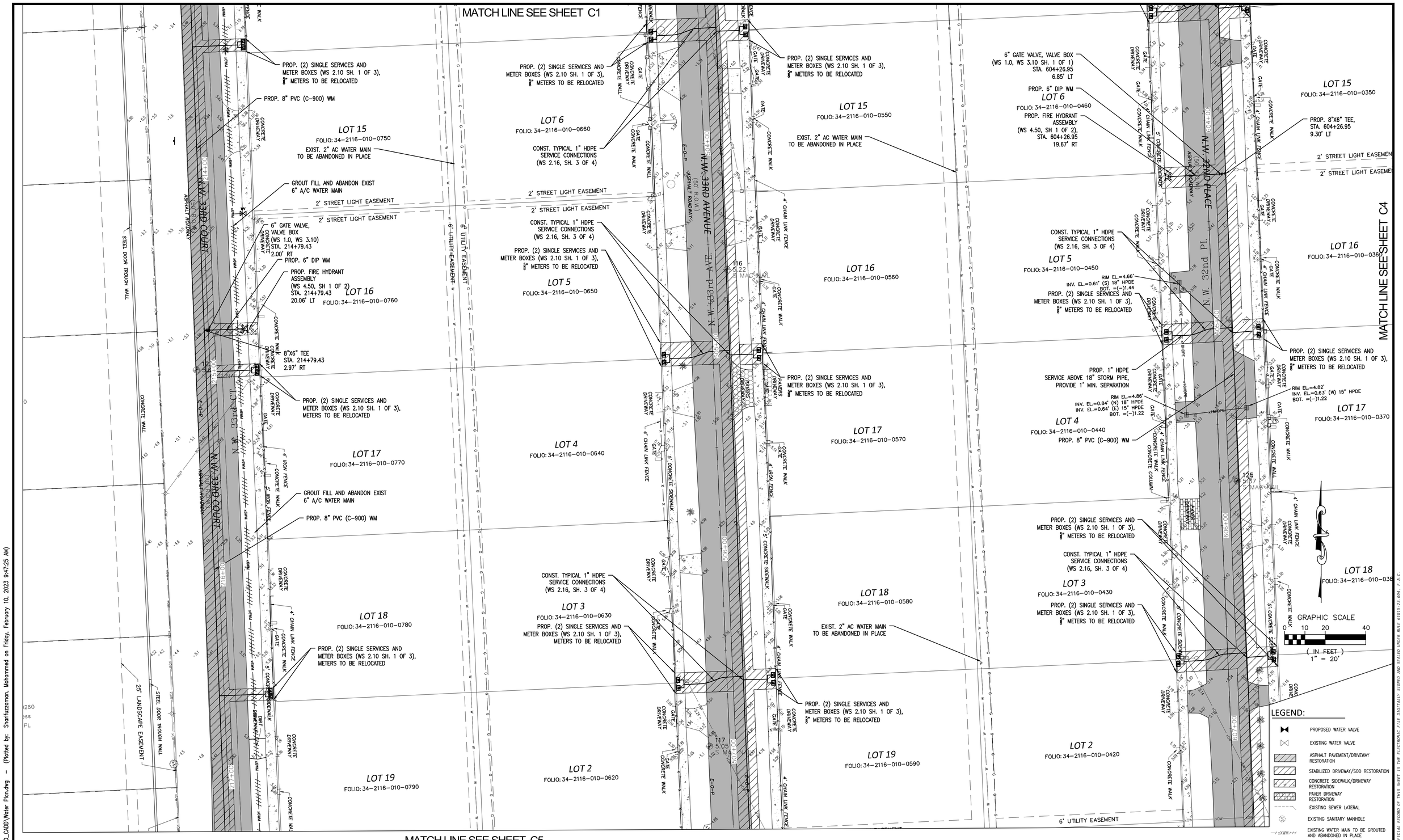

FOR PERMITS

H. W. LOCHNER, INC.
CONSULTING ENGINEERS AND PLANNERS
8750 NW 36th STREET - SUITE 360
MIAMI, FLORIDA - 33178

MIAMI GARDENS WATER MAIN IMPROVEMENTS
CITY OF OPA-LOCKA

WATER PLAN

NO	DATE	REVISION	BY	NO	DATE	REVISION	BY
-	-	-	-				

MOHAMMED SHARIFUZZAMAN, P.E.
STATE OF FLORIDA PROFESSIONAL ENGINEER
LICENSE NO. 67640

DATE: APR 22, 2021

SCALE: AS SHOWN

PROJECT No: 19356

SHEET: C3

File Name: I:\MIA\PRJ\000019356\700_CADD\Water Plan.dwg - (Plotted by: Sharifuzzaman, Mohammed on Friday, February 10, 2023 9:47:25 AM)

THE OFFICIAL RECORD OF THIS SHEET IS THE ELECTRONIC FILE DIGITALLY SIGNED AND SEALED UNDER RULE 61G15-23.004, F.A.C.

MATCH LINE SEE SHEET C2

MATCH LINE SEE SHEET C3

MATCH LINE SEE SHEET C6

FOR PERMITS

H. W. LOCHNER, INC. CONSULTING ENGINEERS AND PLANNERS 8750 NW 36th STREET - SUITE 360 MIAMI, FLORIDA - 33178	MIAMI GARDENS WATER MAIN IMPROVEMENTS CITY OF OPA-LOCKA	WATER PLAN	NO	DATE	REVISION	BY	NO	DATE	REVISION	BY	MOHAMMED SHARIFUZZAMAN, P.E. STATE OF FLORIDA PROFESSIONAL ENGINEER LICENSE NO. 67640 DATE: APR 22, 2021	SCALE AS SHOWN	PROJECT No 19356	SHEET C4

File Name: I:\WA\PRJ\00019356\700_CADD\Water Plan.dwg - (Plotted by: Sharifuzzaman, Mohammed on Friday, February 10, 2023 9:48:06 AM)

THE OFFICIAL RECORD OF THIS SHEET IS THE ELECTRONIC FILE DIGITALLY SIGNED AND SEALED UNDER RULE 61G15-23.004, F.A.C.

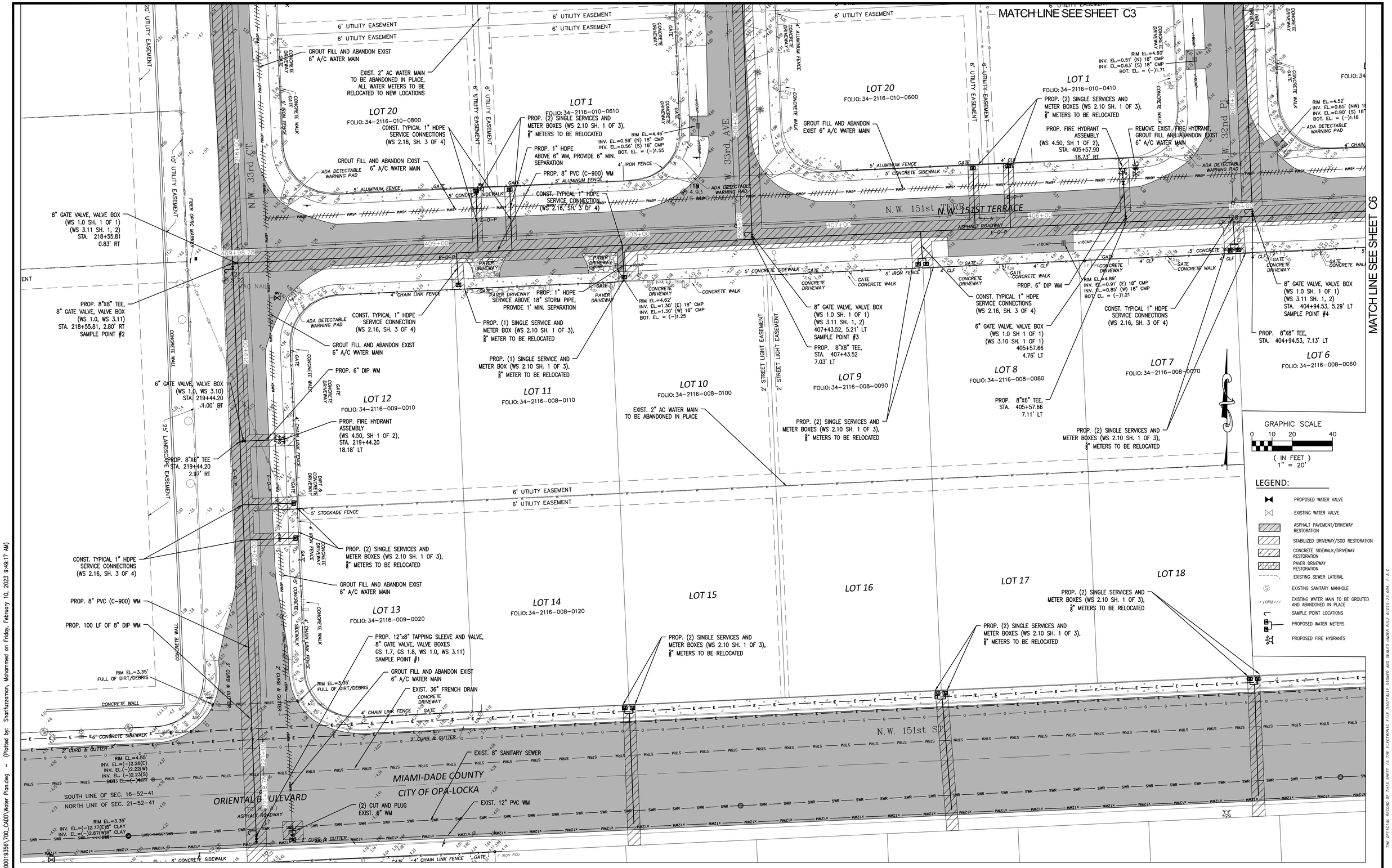

FOR PERMITS

H. W. LOCHNER, INC.
CONSULTING ENGINEERS AND PLANNERS
8750 NW 36th STREET - SUITE 360
MIAMI, FLORIDA - 33178

MIAMI GARDENS WATER MAIN IMPROVEMENTS
CITY OF OPA-LOCKA

WATER PLAN

NO	DATE	REVISION	BY	NO	DATE	REVISION	BY
–	–	.	–				

MOHAMMED SHARIFUZZAMAN, P.E.
STATE OF FLORIDA PROFESSIONAL ENGINEER
LICENSE NO. 67640

DATE: APR 22, 2022

SCALE: AS SHOWN

PROJECT No: 19356

SHEET: C5

File Name: I:\MIA\PRJ\000019356\700_CADD\Water Plan.dwg – (Plotted by: Sharifuzzaman, Mohammed on Friday, February 10, 2023 9:49:17 AM)

THE OFFICIAL RECORD OF THIS SHEET IS THE ELECTRONIC FILE DIGITALLY SIGNED AND SEALED UNDER RULE 61G15-23.004, F.A.C.

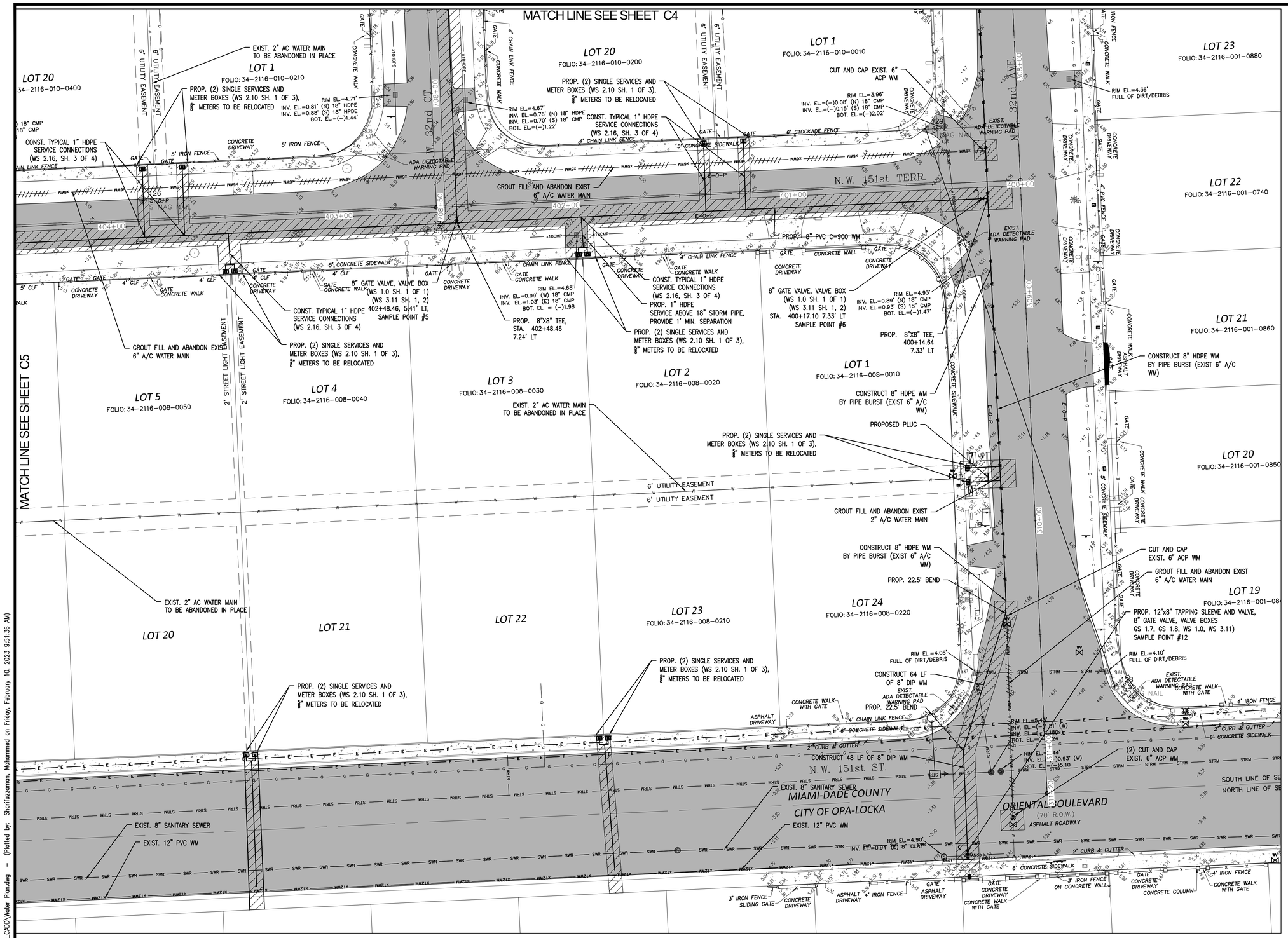

GRAPHIC SCALE

0 10 20 40

(IN FEET)
1" = 20'

LEGEND:

- PROPOSED WATER VALVE
- EXISTING WATER VALVE
- ASPHALT PAVEMENT/DRIVEWAY RESTORATION
- STABILIZED DRIVEWAY/SOD RESTORATION
- CONCRETE SIDEWALK/DRIVEWAY RESTORATION
- PAVER DRIVEWAY RESTORATION
- EXISTING SEWER LATERAL
- EXISTING SANITARY MANHOLE
- EXISTING WATER MAIN TO BE GROUTED AND ABANDONED IN PLACE
- SAMPLE POINT LOCATIONS
- PROPOSED WATER METERS
- PROPOSED FIRE HYDRANTS

FOR PERMITS

H. W. LOCHNER, INC.
CONSULTING ENGINEERS AND PLANNERS
8750 NW 36th STREET - SUITE 360
MIAMI, FLORIDA - 33178

MIAMI GARDENS WATER MAIN IMPROVEMENTS

CITY OF OPA-LOCKA

WATER PLAN

NO	DATE	REVISION	BY	NO	DATE	REVISION	BY
–	–	.	–				

MOHAMMED SHARIFUZZAMAN, P.E.
STATE OF FLORIDA PROFESSIONAL ENGINEER
LICENSE NO. 67640

DATE: APR 22, 2022

SCALE: AS SHOWN

PROJECT No: 19356

SHEET: C6

THE OFFICIAL RECORD OF THIS SHEET IS THE ELECTRONIC FILE DIGITALLY SIGNED AND SEALED UNDER RULE 61G15-23.004, F.A.C.

File Name: I:\MIA\PRJ\00019356\700_CADD\Water Plan.dwg – (Plotted by: Sharifuzzaman, Mohammed on Friday, February 10, 2023 9:51:36 AM)

LEGEND:

- PROPOSED WATER VALVE
- EXISTING WATER VALVE
- ASPHALT PAVEMENT/DRIVEWAY RESTORATION
- STABILIZED DRIVEWAY/SOD RESTORATION
- CONCRETE SIDEWALK/DRIVEWAY RESTORATION
- PAVER DRIVEWAY RESTORATION
- EXISTING SEWER LATERAL
- EXISTING SANITARY MANHOLE
- xXWM EXISTING WATER MAIN TO BE GROUTED AND ABANDONED IN PLACE
- SAMPLE POINT LOCATIONS
- PROPOSED WATER METERS
- PROPOSED FIRE HYDRANTS

GRAPHIC SCALE

0 10 20 40

(IN FEET)
1" = 20'

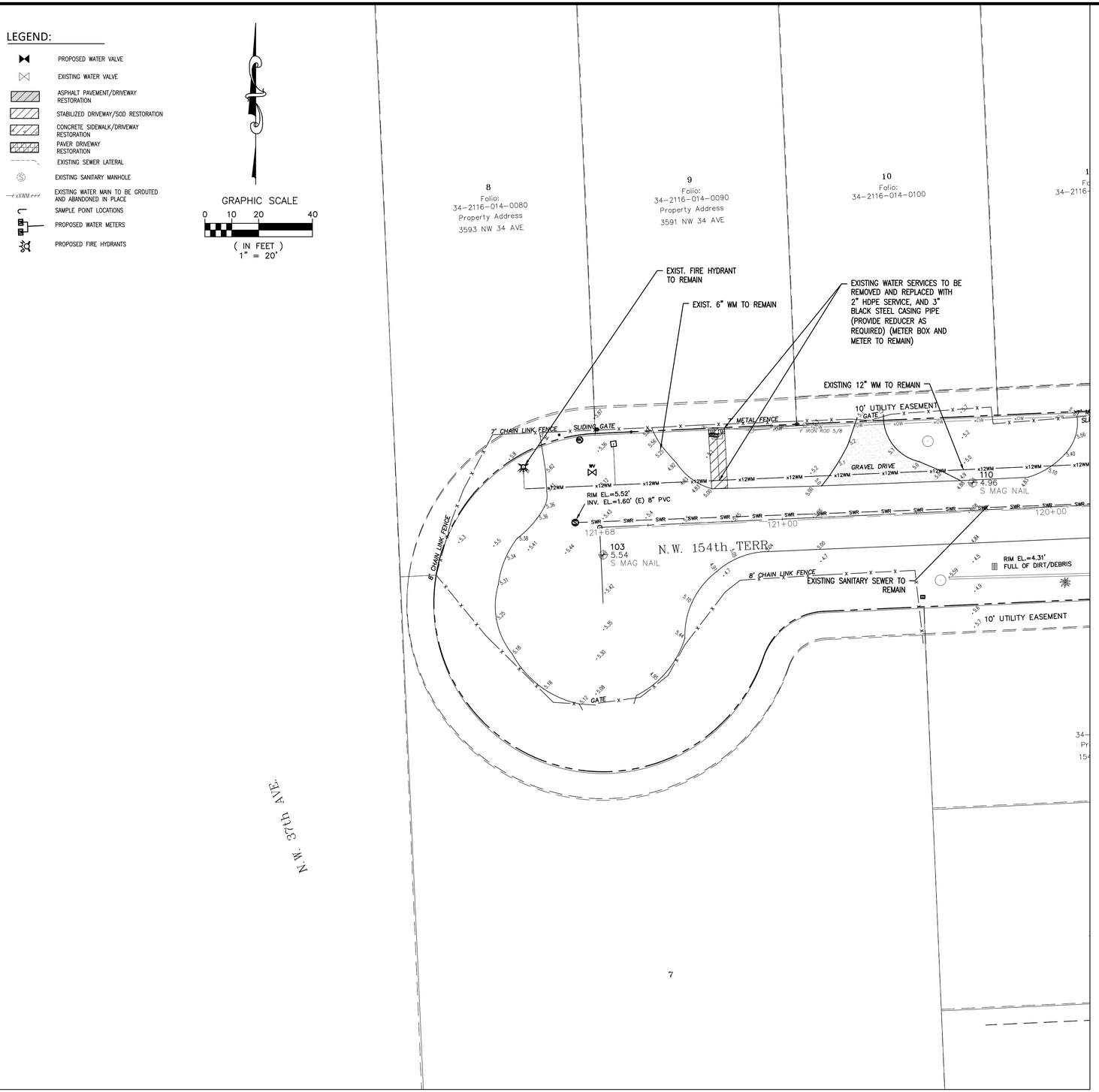

MATCH LINE SEE SHEET C9

MATCH LINE SEE SHEET C8

FOR PERMITS

H. W. LOCHNER, INC. CONSULTING ENGINEERS AND PLANNERS 8750 NW 36th STREET - SUITE 360 MIAMI, FLORIDA - 33178	MIAMI GARDENS WATER MAIN IMPROVEMENTS CITY OF OPA-LOCKA	WATER PLAN	NO	DATE	REVISION	BY	NO	DATE	REVISION	BY	MOHAMMED SHARIFUZZAMAN, P.E. STATE OF FLORIDA PROFESSIONAL ENGINEER LICENSE NO. 67640 DATE: APR 22, 2022	SCALE AS SHOWN PROJECT No 19356	SHEET C7

File Name: I:\MIA\PRJ\000019356\700_CADD\Water Plan.dwg - (Plotted by: Sharifuzzaman, Mohammed on Friday, February 10, 2023 9:52:40 AM)

THE OFFICIAL RECORD OF THIS SHEET IS THE ELECTRONIC FILE DIGITALLY SIGNED AND SEALED UNDER RULE 61G15-23.004, F.A.C.

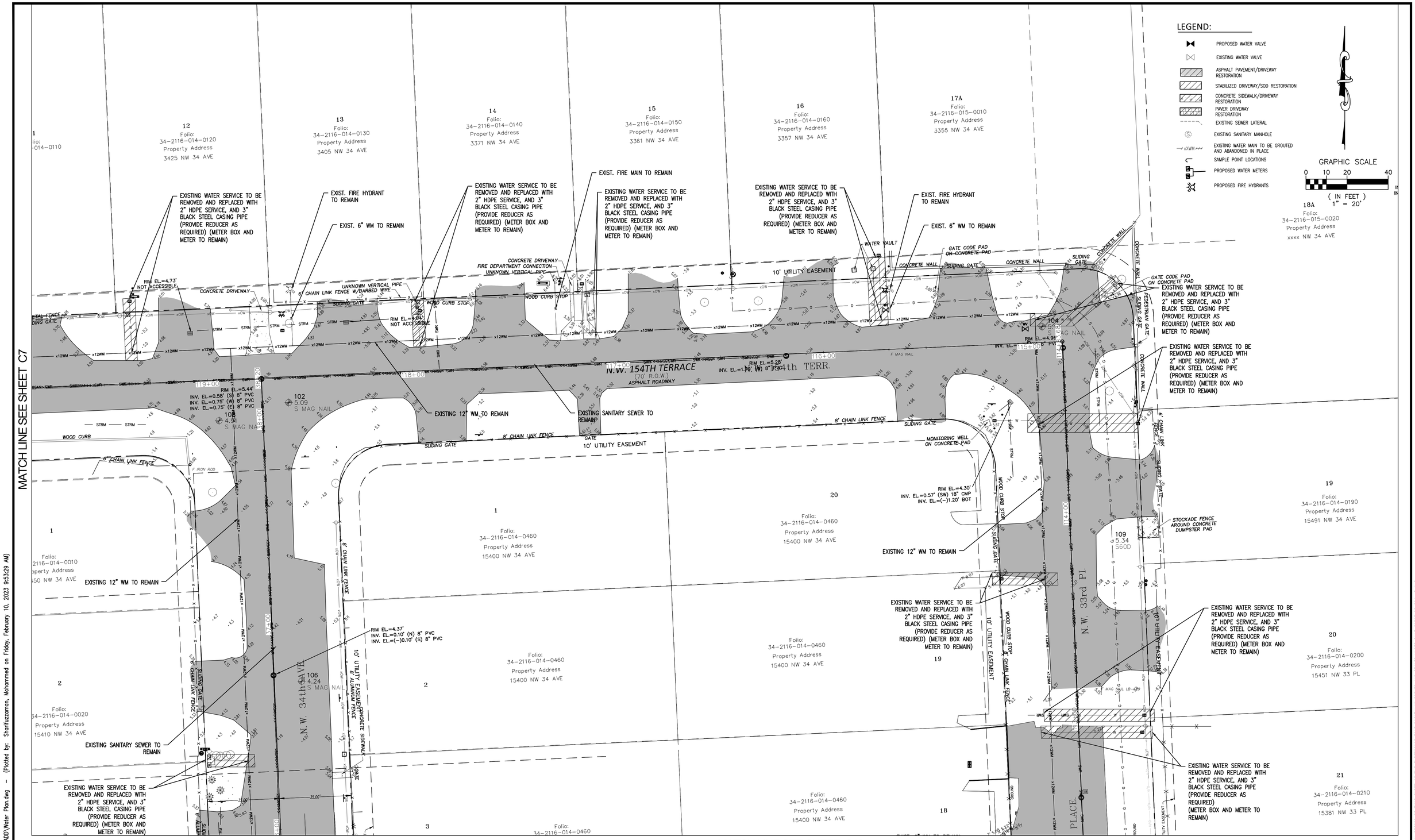

FOR PERMITS

H. W. LOCHNER, INC. CONSULTING ENGINEERS AND PLANNERS 8750 NW 36th STREET - SUITE 360 MIAMI, FLORIDA - 33178	MIAMI GARDENS WATER MAIN IMPROVEMENTS CITY OF OPA-LOCKA	WATER PLAN	MOHAMMED SHARIFUZZAMAN, P.E. STATE OF FLORIDA PROFESSIONAL ENGINEER LICENSE NO. 67640 DATE: APR 22, 2022

NO	DATE	REVISION	BY	NO	DATE	REVISION	BY
-	-	.	-				

SCALE: AS SHOWN
PROJECT No: 19356
SHEET: C8

File Name: I:\MIA\PRJ\000019356\700_CADD\Water Plan.dwg - (Plotted by: Sharifuzzaman, Mohammed on Friday, February 10, 2023 9:53:29 AM)

THE OFFICIAL RECORD OF THIS SHEET IS THE ELECTRONIC FILE DIGITALLY SIGNED AND SEALED UNDER RULE 61G15-23.004, F.A.C.

LEGEND:

- PROPOSED WATER VALVE
- EXISTING WATER VALVE
- ASPHALT PAVEMENT/DRIVEWAY RESTORATION
- STABILIZED DRIVEWAY/SOD RESTORATION
- CONCRETE SIDEWALK/DRIVEWAY RESTORATION
- PAVER DRIVEWAY RESTORATION
- EXISTING SEWER LATERAL
- EXISTING SANITARY MANHOLE
- EXISTING WATER MAIN TO BE GROUTED AND ABANDONED IN PLACE
- SAMPLE POINT LOCATIONS
- PROPOSED WATER METERS
- PROPOSED FIRE HYDRANTS

GRAPHIC SCALE

0 10 20 40

(IN FEET)
1" = 20'

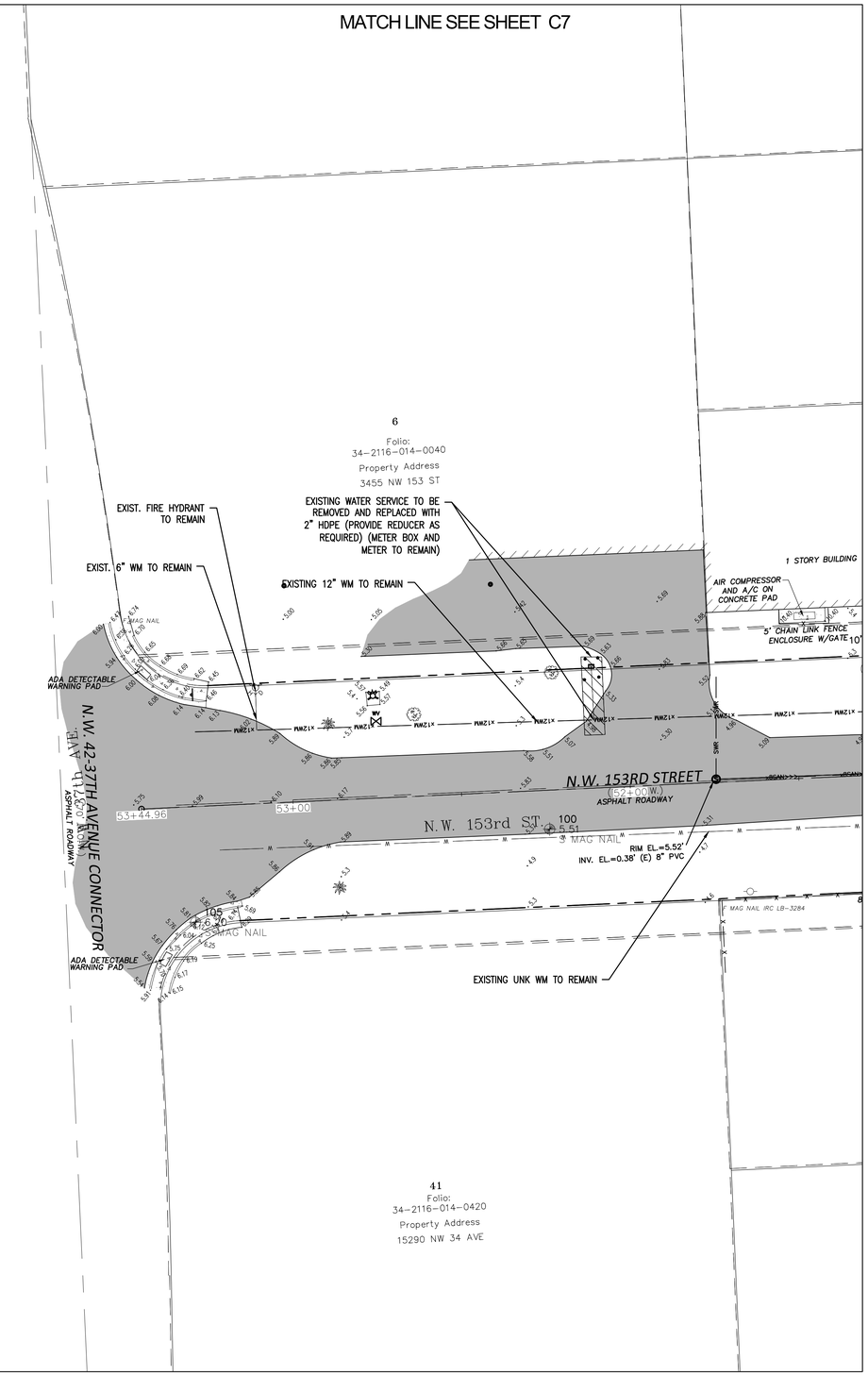

MATCH LINE SEE SHEET C11

FOR PERMITS

H. W. LOCHNER, INC. CONSULTING ENGINEERS AND PLANNERS 8750 NW 36th STREET - SUITE 360 MIAMI, FLORIDA - 33178	MIAMI GARDENS WATER MAIN IMPROVEMENTS CITY OF OPA-LOCKA	WATER PLAN	MOHAMMED SHARIFUZZAMAN, P.E. STATE OF FLORIDA PROFESSIONAL ENGINEER LICENSE NO. 67640 DATE: APR 22, 2022

NO	DATE	REVISION	BY	NO	DATE	REVISION	BY
-	-	.	-				

SCALE: AS SHOWN

PROJECT No: 19356

SHEET: C9

File Name: I:\MIA\PRJ\000019356\700_CADD\Water Plan.dwg - (Plotted by: Sharifuzzaman, Mohammed on Friday, February 10, 2023 9:55:24 AM)

THE OFFICIAL RECORD OF THIS SHEET IS THE ELECTRONIC FILE DIGITALLY SIGNED AND SEALED UNDER RULE 61G15-23.004, F.A.C.

MATCH LINE SEE SHEET C8

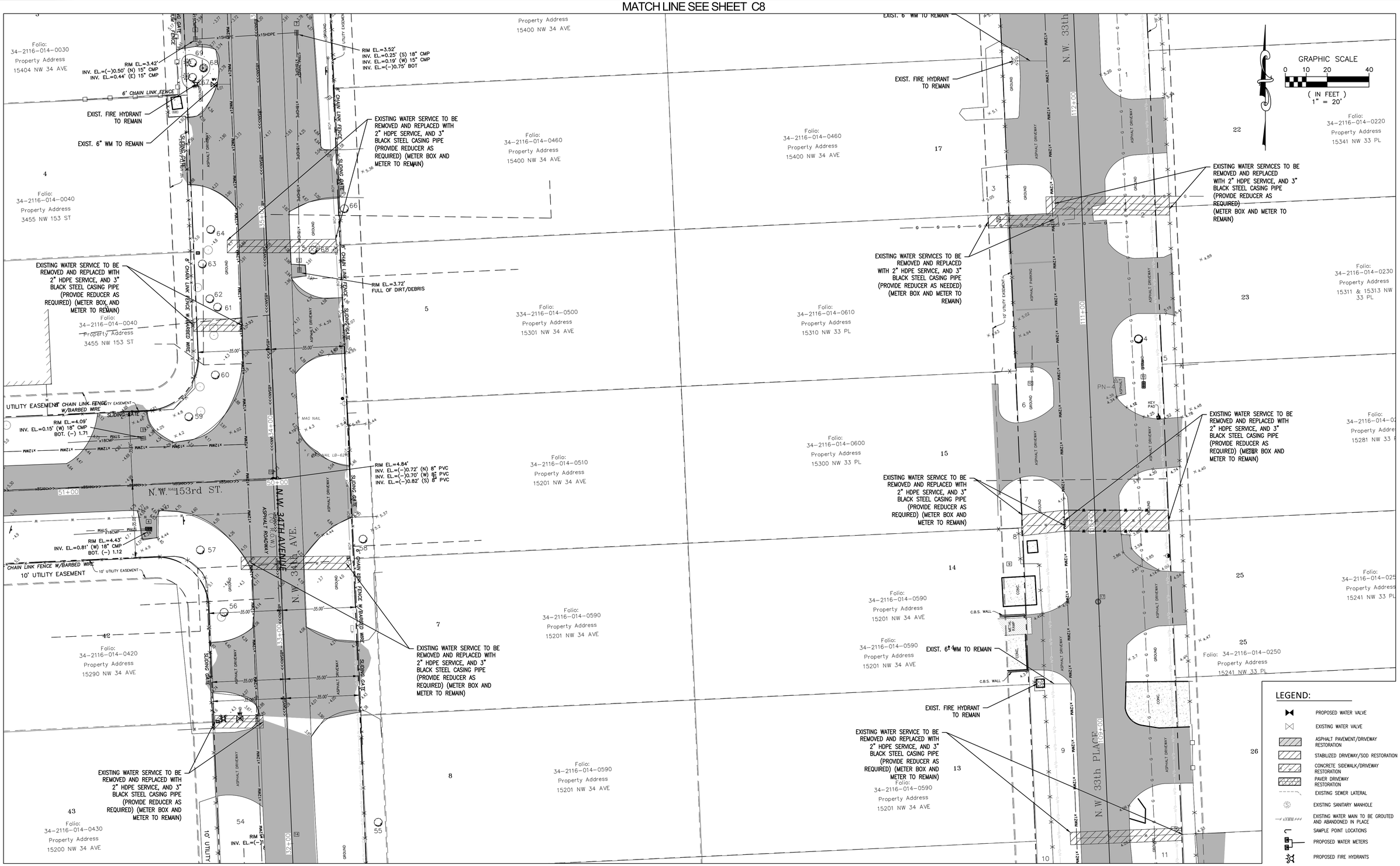

MATCH LINE SEE SHEET C9

MATCH LINE SEE SHEET C12

FOR PERMITS

H. W. LOCHNER, INC.
CONSULTING ENGINEERS AND PLANNERS
8750 NW 36th STREET - SUITE 360
MIAMI, FLORIDA - 33178

MIAMI GARDENS WATER MAIN IMPROVEMENTS
CITY OF OPA-LOCKA

WATER PLAN

NO	DATE	REVISION	BY	NO	DATE	REVISION	BY
-	-	.	-				

MOHAMMED SHARIFUZZAMAN, P.E.
STATE OF FLORIDA PROFESSIONAL ENGINEER
LICENSE NO. 67640

DATE: APR 22, 2022

SCALE: AS SHOWN

PROJECT No: 19356

SHEET: C10

File Name: I:\MIA\PRJ\0000193561\700_CADD\Water Plan.dwg - (Plotted by: Sharifuzzaman, Mohammed on Friday, February 10, 2023 9:56:12 AM)

THE OFFICIAL RECORD OF THIS SHEET IS THE ELECTRONIC FILE DIGITALLY SIGNED AND SEALED UNDER RULE 61G15-23.004, F.A.C.

LEGEND:

- PROPOSED WATER VALVE
- EXISTING WATER VALVE
- ASPHALT PAVEMENT/DRIVEWAY RESTORATION
- STABILIZED DRIVEWAY/SOD RESTORATION
- CONCRETE SIDEWALK/DRIVEWAY RESTORATION
- PAVER DRIVEWAY RESTORATION
- EXISTING SEWER LATERAL
- EXISTING SANITARY MANHOLE
- xXWM EXISTING WATER MAIN TO BE GROUTED AND ABANDONED IN PLACE
- SAMPLE POINT LOCATIONS
- PROPOSED WATER METERS
- PROPOSED FIRE HYDRANTS

GRAPHIC SCALE

0 10 20 40

(IN FEET)
1" = 20'

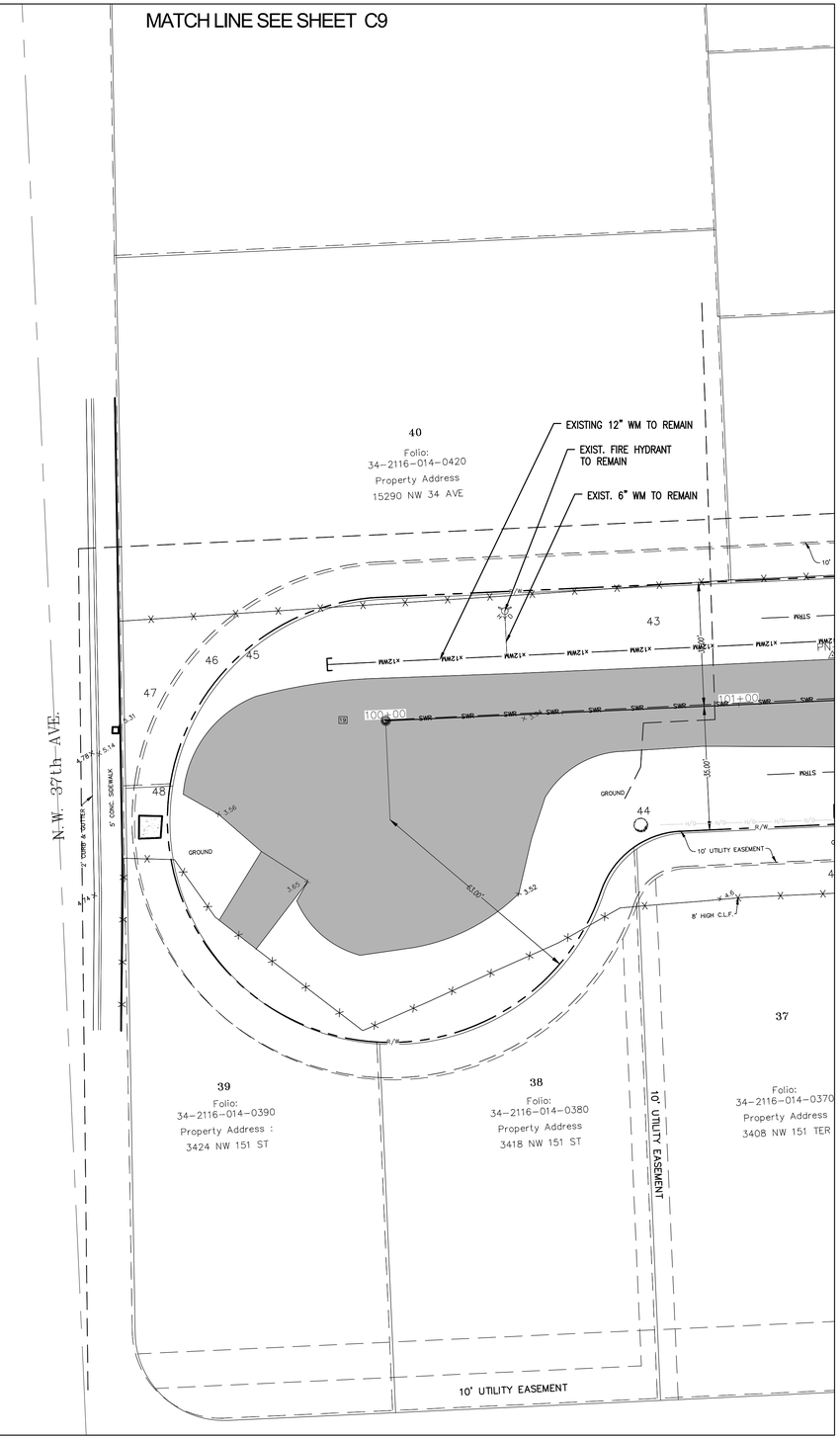

FOR PERMITS

H. W. LOCHNER, INC. CONSULTING ENGINEERS AND PLANNERS 8750 NW 36th STREET - SUITE 360 MIAMI, FLORIDA - 33178	MIAMI GARDENS WATER MAIN IMPROVEMENTS CITY OF OPA-LOCKA	WATER PLAN	MOHAMMED SHARIFUZZAMAN, P.E. STATE OF FLORIDA PROFESSIONAL ENGINEER LICENSE NO. 67640 DATE: APR 22, 2022

NO	DATE	REVISION	BY	NO	DATE	REVISION	BY
-	-	-	-				

SCALE: AS SHOWN

PROJECT No: 19356

SHEET: C11

File Name: I:\MIA\PRJ\00019356\700_CADD\Water Plan.dwg - (Plotted by: Sharifuzzaman, Mohammed on Friday, February 10, 2023 9:57:43 AM)

THE OFFICIAL RECORD OF THIS SHEET IS THE ELECTRONIC FILE DIGITALLY SIGNED AND SEALED UNDER RULE 61G15-23.004, F.A.C.

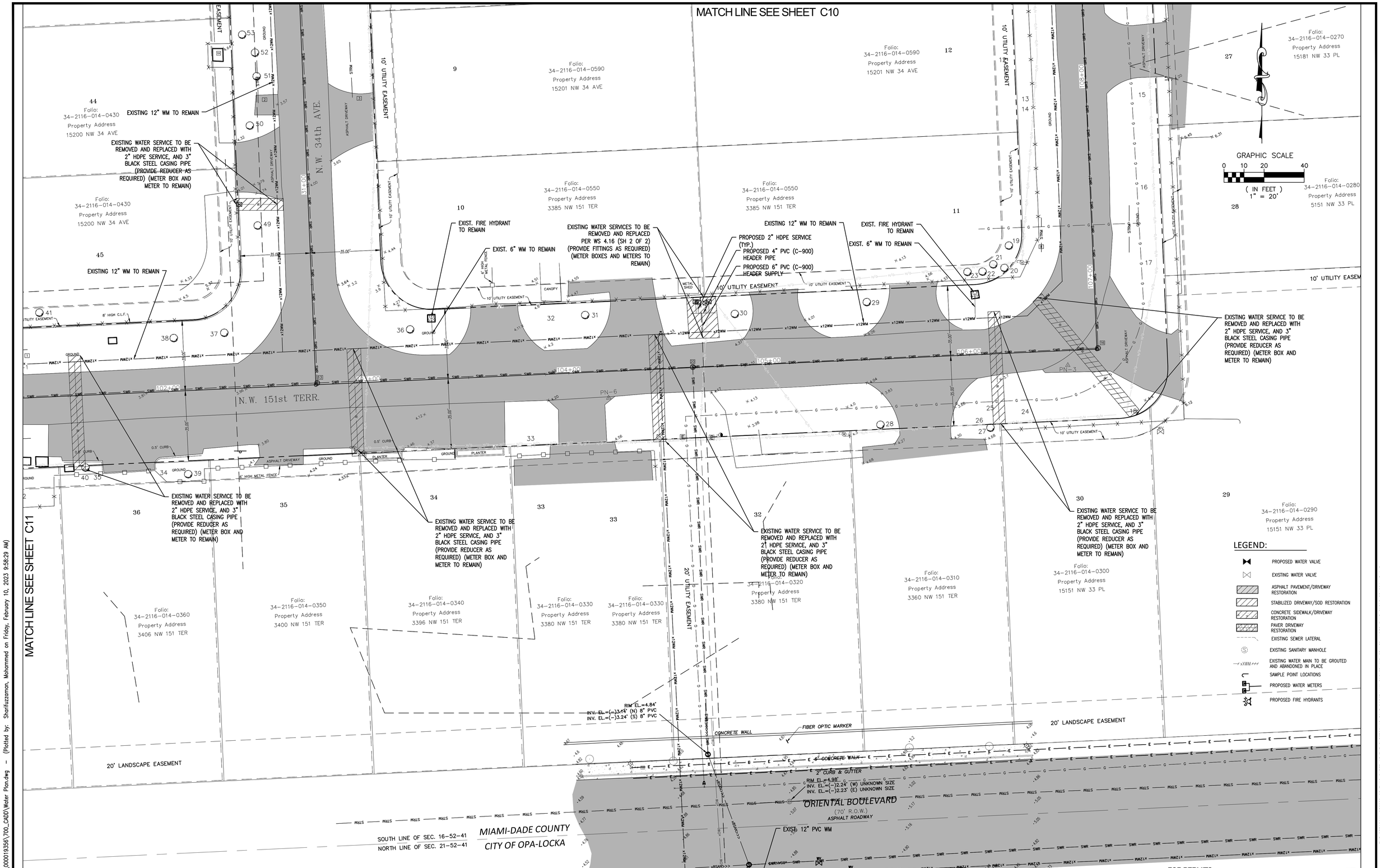

File Name: I:\MIA\PR\J00019356\700_CADD\Water Plan.dwg – (Plotted by: Sharifuzzaman, Mohammed on Friday, February 10, 2023 9:58:29 AM)

H. W. LOCHNER, INC.
CONSULTING ENGINEERS AND PLANNERS
8750 NW 36th STREET – SUITE 360
MIAMI, FLORIDA – 33178

MIAMI GARDENS WATER MAIN IMPROVEMENTS
CITY OF OPA-LOCKA

WATER PLAN

NO	DATE	REVISION	BY	NO	DATE	REVISION	BY
–	–	–	–				

MOHAMMED SHARIFUZZAMAN, P.E.
STATE OF FLORIDA PROFESSIONAL ENGINEER
LICENSE NO. 67640

DATE: APR 22, 2022

SCALE: AS SHOWN

PROJECT No 19356

SHEET C12

FOR PERMITS

THE OFFICIAL RECORD OF THIS SHEET IS THE ELECTRONIC FILE DIGITALLY SIGNED AND SEALED UNDER RULE 61G15-23.004, F.A.C.

1. ALL MATERIALS AND LABOR UNDER THIS PROJECT SHALL BE IN STRICT ACCORDANCE WITH THE REQUIREMENTS OF THE MIAMI-DADE WATER AND SEWER DEPARTMENT AND SHALL CONFORM TO THE STANDARDS AND SPECIFICATIONS AVAILABLE AND ON FILE WITH THE DEPARTMENT. SUBMIT SHOP DRAWINGS FOR ALL MATERIALS.
2. COVER OVER WATER OR SEWER FORCE MAINS SHALL BE 4'-0" MIN.
3. ALL MAIN LINE VALVES SHALL BE INSTALLED COMPLETE WITH 10" RISER PIPES AND NO. 3 OR 53 VALVE BOXES FIRE HYDRANTS AND SERVICE VALVES SHALL BE INSTALLED COMPLETE WITH 6" RISER PIPES AND NO. 2 VALVE BOXES.
4. ALL FORCE MAIN SERVICE CONNECTIONS INTO PRESSURE TRANSMISSION MAINS SHALL HAVE A SHUT OFF VALVE AND CHECK VALVE AT THE POINT OF ENTRY.
5. ALL GRAVITY SYSTEMS SHALL BE CONSTRUCTED IN ACCORDANCE WITH DEPARTMENT STANDARDS.
6. ALL WATER METERS WILL BE INSTALLED BY THE MIAMI-DADE WATER AND SEWER DEPARTMENT, PROVIDING THE APPROPRIATE CHARGES HAVE BEEN PREPAID.
7. FIRE HYDRANT REQUIREMENTS (NUMBER AND LOCATION) SHALL BE AS REQUIRED BY MIAMI-DADE COUNTY FIRE DEPARTMENT OR THE APPROPRIATE FIRE AGENCY WITH INSTALLATION IN ACCORDANCE WITH DEPARTMENT STANDARDS.
8. CONTRACTOR MUST CALL MDWASD INSPECTION DIVISION TO ARRANGE FOR A PRECONSTRUCTION MEETING 2 FULL BUSINESS DAYS PRIOR TO PROPOSED START OF CONSTRUCTION. CONTACT ONE CALL CENTER 48 HRS PRIOR TO EXCAVATION.
9. CONTRACT INSPECTOR WILL INSPECT ANY FACILITIES APPROVED BY THE DEPARTMENT. ALL OTHER REQUIREMENTS OF THE PERMITTING AGENCY SHALL BE IN ACCORDANCE WITH THEIR STANDARDS AND REQUIREMENTS.
10. WORK PERFORMED UNDER THIS PROJECT WILL NOT BE CONSIDERED AS COMPLETE UNTIL FINAL ACCEPTANCE OF THE SYSTEM BY THE DEPARTMENT AND UNTIL THE FOLLOWING DOCUMENTS ARE RECEIVED AND APPROVED BY THE DEPARTMENT:

a. EASEMENTS, IF REQUIRED
b. CONTRACTOR'S WAIVER AND RELEASE OF LIEN
c. ABSOLUTE BILL OF SALE
d. i. CONTRACTOR'S LETTER OF WARRANTY (I.E., LETTER AGREEMENT)
   ii DEVELOPER'S CONTRACT BOND (I.E., CONTRACT AGREEMENT).
e. "RECORD DRAWING" PRINTS (24"x 36") SHOWING SPECIFIC LOCATIONS, DEPTH, ETC. OF ALL WATER AND SEWER FACILITIES AS LOCATED BY A LICENSED SURVEYOR & MAPPER, ALONG WITH PRINTS OF "RECORD DRAWINGS" WHICH HAVE BEEN SIGNED AND SEALED BY A REGISTERED SURVEYOR & MAPPER. (No. OF PRINTS: 3–FOR WATER, 4–FOR GRAVITY SEWER AND 5–FOR FORCE MAIN OR PUMP STATION PROJECTS). Submittal of final CAD Files required.
f. H.R.S. LETTER OF RELEASE REQUIRED FOR ALL WATER PROJECTS
g. BILL OF SALE SKETCH (8½"x 11") FOR WATER AND SEWER, SEPARATELY

11. ALL NEW CONNECTIONS FROM EXISTING DEPARTMENT MAINS TO BE MADE BY DEPARTMENT FORCES ONLY. THE CONTRACTOR TO EXCAVATE AT REQUIRED LOCATIONS, PROVIDE AND INSTALL MATERIAL WITH FITTINGS, PRIOR TO TAP.
12. AN APPROVED PAVING AND DRAINAGE PLAN MUST BE SUBMITTED TO MDWASD FOR ALL NEW SUBDIVISIONS PRIOR TO APPROVAL OF WATER AND SEWER PERMIT PLANS, UPON REQUEST.
13. UNLESS OTHERWISE SPECIFIED, ALL TAPS 20 INCHES AND SMALLER FOR CONNECTIONS TO EXISTING MAINS WILL BE DONE BY DEPARTMENT FORCES. UNDER NO CIRCUMSTANCES WILL THE CONTRACTOR BE PERMITTED TO TAP EXISTING MAINS IN THE SIZE RANGE SPECIFIED ABOVE. THE TAPPING SLEEVE AND TAPPING VALVE ARE FURNISHED AND INSTALLED BY THE CONTRACTOR UNDER THE SUPERVISION OF THE INSPECTOR.

ITEM	CROSS REF.	SPEC. REF.

MIAMI-DADE COUNTY — Delivering Excellence Every Day — WATER & SEWER DEPARTMENT

ISSUE DATE	APPROVED BY
03/01/2010	V.F.C.
07/20/2016	D.V.

STANDARD DETAIL

STANDARD REQUIREMENTS WATER AND SEWER CONSTRUCTION

GS 0.5 — SHEET 1 OF 2

1. AT THE COMPLETION OF ANY WATER AND SEWER JOB EITHER DONATION OR CONTRACT, THE CONTRACTOR SHALL SUBMIT:
   a. RECORD DRAWING PRINTS WHICH HAVE BEEN SIGNED AND SEALED BY A FLORIDA LICENSED PROFESSIONAL SURVEYOR AND MAPPER (QTY. OF PRINTS AS REQUIRED BY THE DEPARTMENT).
2. "RECORD DRAWING" FORMAT:
   a. 24"x 36" PRINTS
   b. PDF FILE
   c. CADD FILE (DWG OR DXF) ROTATED AND TRANSLATED TO STATE PLANE COORDINATES NAD 83 FLORIDA EAST ZONE
   d. THE WORDS "RECORD DRAWING" IN LARGE LETTERS
   e. TITLE BLOCK WITH DEPARTMENT DS, DW OR ER NUMBER AND PERTINENT INFORMATION
   f. PREFERRED SCALE TO BE 1"= 40' HORIZONTALLY AND 1"= 4' VERTICALLY*
   g. STREET NOMENCLATURE
   h. SEPARATE RECORD DRAWINGS FOR WATER AND SEWER
   i. SEPARATE WATER AND SEWER PROFILE
   j. STATIONING STARTING WITH 0+00 AT PERMANENT REFERENCE POINT (I.E. ℄, ⅊, ETC.) OR AS SHOWN ON DESIGN PERMIT PLANS, AND TO RUN CONTINUOUSLY TO END OF MAIN
   k. EASEMENTS, IF ANY, TIED TO PERMANENT REFERENCE POINT
   l. IDENTIFY ALL CONTROL LINES (I.E. BLDG. LINE, PROPERTY LINE, R/W, ETC.)
   m. ALL "PROPOSED" INFORMATION TO BE REMOVED FROM PRINTS, LEAVING ONLY RECORD DRAWING INFORMATION REFLECTED IN DRAWINGS
3. WATER "RECORD DRAWINGS" MUST INCLUDE:
   a. PLANS SHOWING PIPE SIZE, MATERIAL AND OFFSET OF MAIN, DEFLECTIONS (IF ANY), STATION OF SERVICES, HYDRANTS, VALVES, FITTINGS, IF ANY, ALL IN STATE PLANE COORDINATES. UTILITY CROSSINGS SHALL BE CLEARLY IDENTIFIED AND LOCATED.
   b. PROFILE SHOWING TOP OF GROUND AND TOP OF PIPE ELEVATIONS AT EVERY 100' STATION AND AT ANY CHANGE IN GRADE (WITH CORRESPONDING STATION), PIPE SIZE AND PIPE MATERIALS REFERENCED TO PLAN.
4. SEWER "RECORD DRAWINGS" MUST INCLUDE:
   a. PLAN SHOWING MANHOLE NUMBER, PIPE SIZE AND PIPE MATERIAL OF PIPE, DEFLECTION, SLOPE OF GRAVITY SEWER, LOCATION OF LATERALS WITH REFERENCE TO MANHOLE AND CLEANOUTS.
   b. THE NORTHERLY AND EASTERLY COORDINATES ON ALL FIELD OBTAINED MEASUREMENTS AND PROVIDED ON ALL RECORD DRAWING SUBMITTALS
   c. PROFILE SHOWING MANHOLE NUMBER (AS PER PLAN), RIM AND INVERT ELEVATIONS (IF MORE THAN ONE INVERT, LABEL NORTH, SOUTH, ETC.), AND STATION STARTING AT 0+00 AT DOWNSTREAM MANHOLE.
5. FORCE MAIN "RECORD DRAWING" SAME AS WATER MAIN.
6. EACH RECORD DRAWING SHALL SHOW THE FLORIDA STATE PLANE COORDINATES (CURRENT READJUSTMENT) OF ALL THE MANHOLES AND VALVES AND OF AT LEAST TWO HORIZONTAL CONTROL POINTS PROPERLY IDENTIFIED AND LOCATED WITHIN THE PROJECT.

* OTHER SCALE MAY BE PERMITTED, BUT MUST BE APPROVED BY THE DEPARTMENT PRIOR TO PREPARATION OF DRAWINGS.

ITEM	CROSS REF.	SPEC. REF.

MIAMI-DADE COUNTY — Delivering Excellence Every Day — WATER & SEWER DEPARTMENT

ISSUE DATE	APPROVED BY
03/11/2009	V.F.C.
07/20/2016	D.V.

STANDARD DETAIL

"RECORD DRAWING" REQUIREMENTS

GS 0.5 — SHEET 2 OF 2

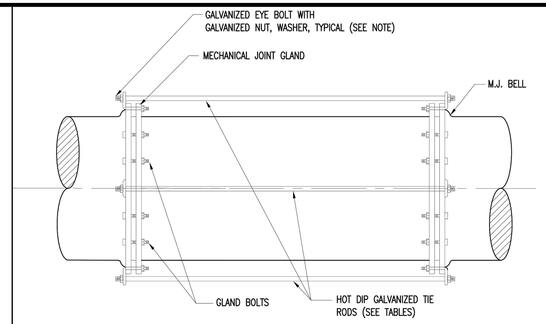

PRESSURE AT 150 P.S.I.		
PIPE SIZE	ROD DIAMETER	No. OF RODS
8" & SMALLER	¾"	3
12"	¾"	4
16"	¾"	6
20"	¾"	8
24"	¾"	12
30"	1"	14
36"	1"	14
42"	1– ¼"	16
48"	1– ¼"	16

NOTES:

1. EYE BOLT REPLACES GLAND BOLT AT TIE ROD LOCATIONS.
2. IN LIEU OF BELL/ROD RESTRAINTS, MECHANICAL JOINT RESTRAINTS MAY BE USED

ITEM	CROSS REF.	SPEC. REF.

MIAMI-DADE COUNTY — Delivering Excellence Every Day — WATER & SEWER DEPARTMENT

ISSUE DATE	APPROVED BY
11/01/2006	V.E.F.
07/20/2016	D.V.

STANDARD DETAIL

TYPICAL TIE–ROD DETAILS

GS 1.0 — SHEET 1 OF 1

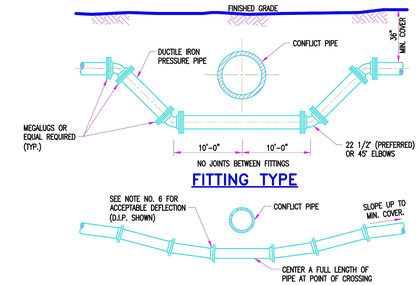

NOTES:

1. STORM SEWER, GRAVITY WASTEWATER AND RECLAIMED WATER MAIN CROSSING UNDER POTABLE WATER MAINS SHALL BE LAID TO PROVIDE A MINIMUM VERTICAL DISTANCE OF TWELVE (12) INCHES BETWEEN THE INVERT OF THE UPPER PIPE AND THE CROWN OF THE LOWER PIPE. WHERE THIS MINIMUM SEPARATION CANNOT BE MAINTAINED, THE CROSSING SHALL BE ARRANGED SO THAT THE TORM/WASTEWATER/RECLAIMED WATER PIPE JOINTS AND POTABLE WATER MAIN JOINTS ARE EQUIDISTANT FROM THE POINT OF CROSSING WITH NO LESS THAN TEN (10) FEET BETWEEN ANY TWO JOINTS, BOTH PIPES SHALL BE D.I.P., AND THE MINIMUM VERTICAL SEPARATION SHALL BE 6 INCHES. WHERE THERE IS NO ALTERNATIVE TO STORM/WASTEWATER/RECLAIMED WATER PIPES CROSSING OVER A POTABLE WATER MAIN, THE CRITERIA FOR MINIMUM 12" VERTICAL SEPARATION BETWEEN LINES AND JOINT ARRANGEMENT, AS STATED ABOVE, SHALL BE REQUIRED, AND BOTH PIPES SHALL BE D.I.P. D.I.P. IRRESPECTIVE OF SEPARATION. D.I.P. IS NOT REQUIRED FOR STORM SEWERS.
2. WHENEVER POSSIBLE MAINTAIN MIN. TEN (10) FEET HORIZONTAL DISTANCE (WALL TO WALL) BETWEEN POTABLE WATER MAIN AND STORM SEWER, WASTEWATER MAIN, OR FORCE MAIN (A MIN. 6' SEPARATION MAY BE APPROVED ON A CASE BY CASE BASIS.) MAINTAIN MIN. THREE (3) FEET HORIZONTAL DISTANCE (WALL TO WALL) BETWEEN RECLAIMED WATER MAIN AND POTABLE WATER MAIN, STORM SEWER, WASTEWATER GRAVITY MAIN OR FORCE MAIN.
3. FORCE MAIN CROSSING POTABLE WATER MAIN OR RECLAIMED WATER MAIN SHALL BE LAID TO PROVIDE A MINIMUM VERTICAL DISTANCE OF TWELVE (12) INCHES BETWEEN THE OUTSIDE OF THE FORCE MAIN AND OUTSIDE OF THE POTABLE WATER MAIN OR RECLAIMED WATER MAIN WITH THE POTABLE WATER MAIN OR RECLAIMED WATER MAIN CROSSING OVER THE FORCE MAIN.
4. FITTINGS SHALL BE RESTRAINED.
5. THE DEFLECTION TYPE CROSSING IS PREFERRED.
6. DO NOT EXCEED 50% OF MANUFACTURERS RECOMMENDED MAXIMUM JOINT DEFLECTION FOR DUCTILE IRON PIPE. PVC PIPE CURVATURE MAY ONLY BE ACCOMPLISHED BY INSTALLING APPROPRIATE BENDS.
7. POTABLE WATER SERVICE LINES SHALL CROSS OVER WASTEWATER MAINS WITH MIN. 12" VERTICAL SEPARATION. WHERE THIS MIN. SEPARATION CAN NOT BE MAINTAINED, THE WATER SERVICE SHALL BE ENCASED IN A MIN. 10' LONG CASING CENTERED OVER THE CROSSING WITH MIN. 6" VERTICAL SEPARATION.
8. WASTEWATER MAINS, WATER MAINS, STORM PIPES AND OTHER UTILITY PIPES SHALL CROSS PERPENDICULAR WHENEVER POSSIBLE.

ITEM	CROSS REF.	SPEC. REF.

MIAMI-DADE COUNTY — Delivering Excellence Every Day — WATER & SEWER DEPARTMENT

ISSUE DATE	APPROVED BY
07/20/2016	D.V.

STANDARD DETAIL

POTABLE WATER MAIN/FORCE MAIN PRESSURE PIPE CONFLICT DETAIL

GS 1.1 — SHEET 1 OF 1

LOCATION OF PUBLIC WATER SYSTEM MAINS ACCORDANCE WITH F.A.C. RULE 62–555.314

OTHER PIPE	HORIZONTAL SEPARATION	CROSSINGS (1)	JOINT SPACING @ CROSSINGS (FULL LENGTH OF PIPE CENTERED)
Storm Sewer; Stormwater Force Main; Reclaimed Water (2)	Water Main — 3 ft. minimum	Water Main — 12 inches is the minimum.	Alternate: 3 ft minimum — Water Main
Vacuum Sanitary Sewer	Water Main — 10 ft. preferred, 3 ft. minimum	Water Main — 12 inches preferred, 6 inches minimum	Alternate: 3 ft minimum — Water Main
Gravity or Pressure; Sanitary Sewer; Sanitary Sewer Force Main; Reclaimed Water (4)	Water Main — 10 ft. preferred, 6 ft. minimum (3)	Water Main — 12 inches is the minimum.	Alternate: 6 ft minimum — Water Main
On–Site Sewage Treatment & Disposal System	10 ft minimum	–	–

NOTES:
(1) WATER MAIN SHOULD BE ABOVE OTHER PIPE. WHEN WATER MAIN MUST BE BELOW OTHER PIPE, THE MINIMUM SEPARATION IS 12 INCHES.
(2) RECLAIMED WATER REGULATED UNDER PART II OF CHAPTER 62–610, F.A.C.
(3) 3 FT. GRAVITY SANITARY SEWER WHERE THE BOTTOM OF THE WATER MAIN IS LAID AT LEAST 6 INCHES ABOVE THE TOP OF THE GRAVITY SANITARY SEWER.
(4) RECLAIMED WATER NOT REGULATED UNDER PART III OF CHAPTER 62–610, F.A.C.

ITEM	CROSS REF.	SPEC. REF.

MIAMI-DADE COUNTY — Delivering Excellence Every Day — WATER & SEWER DEPARTMENT

ISSUE DATE	APPROVED BY
10/1/2017	D.V.

STANDARD DETAIL

POTABLE WATER MAIN, WASTEWATER & STORM SEWER CONFLICT

GS 1.5 — SHEET 1 OF 2

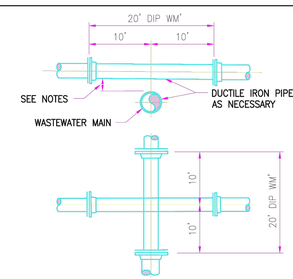

NOTES:

1. STORM SEWER, GRAVITY WASTEWATER AND RECLAIMED WATER MAIN CROSSING UNDER POTABLE WATER MAINS SHALL BE LAID TO PROVIDE A MINIMUM VERTICAL DISTANCE OF TWELVE (12) INCHES BETWEEN THE INVERT OF THE UPPER PIPE AND THE CROWN OF THE LOWER PIPE. WHERE THIS MINIMUM SEPARATION CANNOT BE MAINTAINED, THE CROSSING SHALL BE ARRANGED SO THAT THE STORM/WASTEWATER/RECLAIMED WATER PIPE JOINTS AND POTABLE WATER MAIN JOINTS ARE EQUIDISTANT FROM THE POINT OF CROSSING WITH NO LESS THAN TEN (10) FEET BETWEEN ANY TWO JOINTS, BOTH PIPES SHALL BE D.I.P., AND THE MINIMUM VERTICAL SEPARATION SHALL BE 6 INCHES. WHERE THERE IS NO ALTERNATIVE TO STORM/WASTEWATER/RECLAIMED WATER PIPES CROSSING OVER A POTABLE WATER MAIN, THE CRITERIA FOR MINIMUM 12" VERTICAL SEPARATION BETWEEN LINES AND JOINT ARRANGEMENT, AS STATED ABOVE, SHALL BE REQUIRED, AND BOTH PIPES SHALL BE D.I.P. D.I.P. IS NOT REQUIRED FOR STORM SEWERS.
2. WHENEVER POSSIBLE MAINTAIN MIN. TEN (10) FEET HORIZONTAL DISTANCE (WALL TO WALL) BETWEEN POTABLE WATER MAIN AND STORM SEWER, WASTEWATER MAIN, OR FORCE MAIN (A MIN. 6' SEPARATION MAY BE APPROVED ON A CASE BY CASE BASIS). MAINTAIN MIN. THREE (3) FEET HORIZONTAL DISTANCE (WALL TO WALL) BETWEEN RECLAIMED WATER MAIN AND POTABLE WATER MAIN, STORM SEWER, WASTEWATER GRAVITY MAIN OR FORCE MAIN.
3. FORCE MAIN CROSSING POTABLE WATER MAIN OR RECLAIMED WATER MAIN SHALL BE LAID TO PROVIDE A MINIMUM VERTICAL DISTANCE OF TWELVE (12) INCHES BETWEEN THE OUTSIDE OF THE FORCE MAIN AND OUTSIDE OF THE POTABLE WATER MAIN OR RECLAIMED WATER MAIN WITH THE POTABLE WATER MAIN OR RECLAIMED WATER MAIN CROSSING OVER THE FORCE MAIN.
4. WASTEWATER LATERALS SHALL CROSS UNDER POTABLE WATER MAINS WITH A MIN. 12" VERTICAL SEPARATION WHENEVER POSSIBLE. WHERE THIS MINIMUM SEPARATION CANNOT BE MAINTAINED, A 20' SECTION OF DUCTILE IRON PIPE POTABLE WATER MAIN CENTERED ON THE CROSSING IS REQUIRED AND THE MINIMUM VERTICAL SEPARATION SHALL BE 6". WHERE THERE IS NO ALTERNATIVE TO A WASTEWATER LATERAL PIPE CROSSING OVER A POTABLE WATER MAIN, A MINIMUM 12" VERTICAL SEPARATION IS REQUIRED, THE LATERAL SHALL BE P.V.C. C–900 SDR18 OR BETTER, THE POTABLE WATER MAIN SHALL BE D.I.P. AND THE PIPE JOINTS SHALL BE EQUIDISTANT FROM THE POINT OF CROSSING.
5. POTABLE WATER SERVICE LINES SHALL CROSS OVER WASTEWATER MAINS WITH A MIN. 12" VERTICAL SEPARATION. WHERE THIS MIN. SEPARATION CAN NOT BE MAINTAINED, THE WATER SERVICE SHALL BE ENCASED IN A MIN. 10' LONG PVC CASING CENTERED OVER THE CROSSING WITH MIN. 6" VERTICAL SEPARATION.
6. WASTEWATER MAINS, WATER MAINS, STORM PIPES AND OTHER UTILITY PIPES SHALL CROSS PERPENDICULAR WHENEVER POSSIBLE.

ITEM	CROSS REF.	SPEC. REF.

MIAMI-DADE COUNTY — Delivering Excellence Every Day — WATER & SEWER DEPARTMENT

ISSUE DATE	APPROVED BY
10/1/2017	D.V.

STANDARD DETAIL

WATER AND SEWER MAINS CROSSING

GS 1.5 — SHEET 2 OF 2

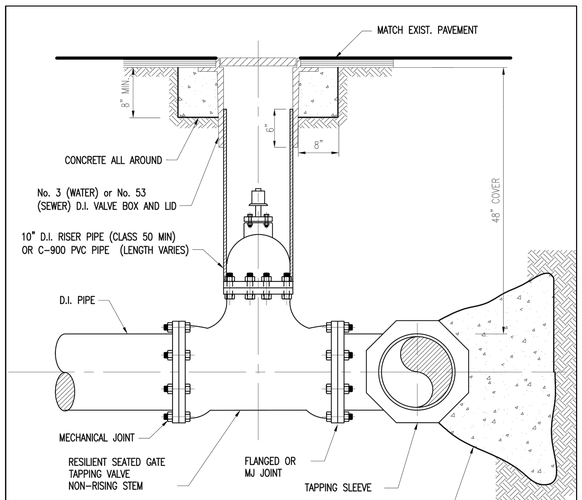

NOTES:

1. RESILIENT SEATED GATE TAPPING VALVE CAN BE USED FOR SEWER CONNECTION.
2. 18" CLEARANCE FROM FITTINGS AND BELLS.
3. TAPPING VALVE AND SLEEVE SHALL BE PRESSURE TESTED AT 150 "psi" PRIOR TO BEING TAPPED.
4. TAPPING ON CONCRETE MAINS SHALL BE PRESSURE TESTED AT A LOWER PRESSURE THAN THE ACTIVE OPERATING PRESSURE OF THE MAIN.

No.53 Valve Box	SS 13.0
No.3 Valve Box	WS 3.11
INSTALLATION	GS 1.8

ITEM	CROSS REF.	SPEC. REF.

MIAMI-DADE COUNTY — Delivering Excellence Every Day — WATER & SEWER DEPARTMENT

ISSUE DATE	APPROVED BY
01/22/2009	V.F.C.
07/20/2016	D.V.

STANDARD DETAIL

TYPICAL TAPPING VALVE SETTING (16" AND SMALLER)

GS 1.7 — SHEET 1 OF 1

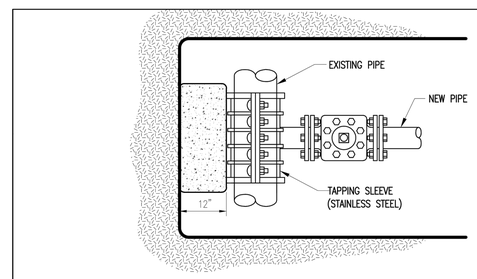

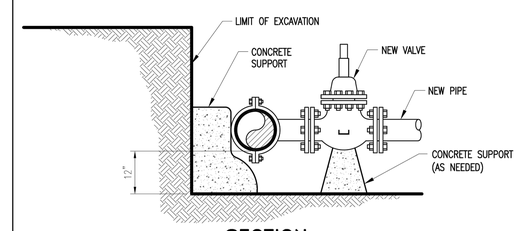

PROCEDURE:

1. CONTRACTOR TO INSTALL AND PRESSURE TEST TAPPING SLEEVE AND VALVE, WITNESSED BY M–D.WASD INSPECTOR.
2. ALL TAPS LARGER THAN 20 INCHES SMALL BE DONE BY A TAPPING SPECIALIST WITH CREDENTIALS ACCEPTABLE TO THE DEPARTMENT.
3. CONTRACTOR TO SUPPLY EQUIPMENT TO HANDLE TAPPING MACHINE & DEWATERING EQUIPMENT.
4. 18" CLEARANCE FROM FITTINGS AND BELLS.
5. TAPPING VALVE AND SLEEVE SHALL BE PRESSURE TESTED AT 150 psi PRIOR TO BEING TAPPED.

ITEM	CROSS REF.	SPEC. REF.

MIAMI-DADE COUNTY — Delivering Excellence Every Day — WATER & SEWER DEPARTMENT

ISSUE DATE	APPROVED BY
01/22/2009	V.F.C.
07/20/2016	D.V.

STANDARD DETAIL

TAPPING SLEEVE AND VALVE INSTALLATION (PROPOSED)

GS 1.8 — SHEET 1 OF 1

THE OFFICIAL RECORD OF THIS SHEET IS THE ELECTRONIC FILE DIGITALLY SIGNED AND SEALED UNDER RULE 61G15-23.004, F.A.C.

H. W. LOCHNER, INC.
CONSULTING ENGINEERS AND PLANNERS
8750 NW 36th STREET – SUITE 360
MIAMI, FLORIDA – 33178

MIAMI GARDENS WATER MAIN IMPROVEMENTS
CITY OF OPA-LOCKA

GENERAL DETAILS

NO	DATE	REVISION	BY	NO	DATE	REVISION	BY
–	–	–	–				

MOHAMMED SHARIFUZZAMAN, P.E.
STATE OF FLORIDA PROFESSIONAL ENGINEER
LICENSE NO. 67640
DATE: APR 22, 2022

SCALE: AS SHOWN
PROJECT No: 19356
SHEET: C13

File Name: I:\MIA\PRJ\00001935\700_CADD\Details.dwg – (Plotted by: Sharifuzzaman, Mohammed on Friday, February 10, 2023 10:04:05 AM)

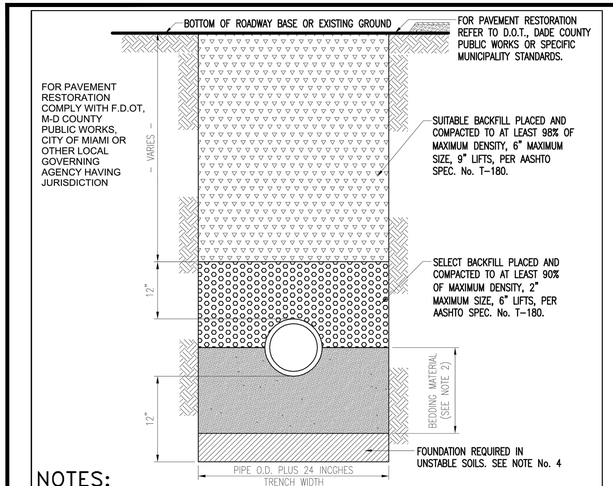

NOTES:

1 FOR EXCAVATION AND BACKFILL AROUND MANHOLES, APPURTENANCES, OR IN WATER, REFER TO PROVISIONS WITHIN THE SPECIFICATIONS.

2 UNLESS OTHERWISE SPECIFIED, BEDDING MATERIAL SHALL CONSIST OF SELECT BACKFILL MATERIAL 2" MAX. SIZE, OR WASHED AND GRADED LIMEROCK (3/8"-7/8"), COMPACTED TO AT LEAST 90° OF MAX. DENSITY, 6" LIFTS, PER AASHTO SPEC. No. T-180.

3 WHERE REQUIRED, SHEETING AND SHORING SHALL BE IN ACCORDANCE WITH SPECIFICATIONS.

4 WHERE UNSTABLE SOILS ARE ENCOUNTERED, INCLUDING PEAT, MUCK OR OTHER ORGANIC SOILS, ELASTIC SILT AND CLAYS BELOW THE WATER TABLE, A FOUNDATION IS REQUIRED. COMPACTED TO AT LEAST 90° OF MAX. DENSITY, 6" LIFTS, PER AASHTO SPEC. NO. T-180. FOUNDATION MATERIAL SHALL BE SELECT BACKFILL MATERIAL, 2" MAXIMUM SIZE 6" LIFTS EXTEND EXCAVATION AT LEAST 2' DEEPER FOR FOUNDATION ENLESS SUITABLE MATERIAL IS FOUND AT A LESSER DEPTH, GREATER DEPTHS MAY BE REQUIRED FOR EXTREMELY POOR CONDITIONS.

5 POLYETHYLENE ENCASEMENT OF CAST IRON VALVES, PIPE AND FITTINGS, IF REQUIRED BY THE DEPARTMENT, SHALL BE PER ANSI/AWWA C105/A21.5, METHOD A, B OR C FOR TYPE I CLASS C TUBE, MIN. 8 MILS

ITEM	CROSS REF.	SPEC. REF.

MIAMI-DADE COUNTY Delivering Excellence Every Day — WATER & SEWER DEPARTMENT

ISSUE DATE	APPROVED BY
11/01/2006	V.E.F.
07/20/2016	D.V.

STANDARD DETAIL

TYPICAL TRENCH BACKFILL FOR D.I. WATER AND FORCE MAINS

GS 1.9 — SHEET 1 OF 1

MINIMUM LENGTH OF PIPE (FEET) TO BE RESTRAINED

(SOURCES: EBAA IRON RESTRAINT LENGTH CALCULATION PROGRAM FOR PVC PIPE, RELEASE 3.1, AND DIPRA THRUST RESTRAINT FOR DUCTILE IRON PIPE, RELEASE 3.2)

FITTING TYPE		PIPE SIZE 4"	6"	8"	10"	12"	16"	20"	24"	30"	36"	42"	48"
90° HORIZONTAL BEND		14	20	25	30	35	45	54	62	73	84	93	101
45° HORIZONTAL BEND		6	8	11	13	15	19	22	26	30	35	38	42
22.5° HORIZONTAL BEND		3	4	5	6	7	9	11	12	15	17	18	20
11.25° HORIZONTAL BEND		1	2	3	3	4	4	5	6	7	8	9	10
90° VERTICAL OFFSET	UPPER BEND	55	79	103	125	147	189	228	266	319	368	412	454
	LOWER BEND	22	38	49	59	69	88	106	123	145	165	184	201
45° VERTICAL OFFSET	UPPER BEND	22	32	42	51	60	77	93	109	131	151	170	187
	LOWER BEND	10	14	19	23	28	35	43	50	59	67	75	82
22.5° VERTICAL OFFSET	UPPER BEND	7	12	17	21	26	34	42	49	60	70	78	87
	LOWER BEND	2	4	6	8	10	14	17	21	25	29	33	36
11.25° VERTICAL OFFSET	UPPER BEND	3	4	6	9	11	15	19	22	28	32	37	41
	LOWER BEND	1	1	1	2	3	5	7	8	10	12	14	16
PLUG (DEAD END)		32	45	59	70	83	107	129	151	190	220	244	270
IN–LINE VALVE		32	45	59	70	83	107	129	151	100	110	125	135
TEE (BRANCH RESTRAINT)	4"x 0	23											
	6"x 0	21	35										
	8"x 0	18	34	47									
	10"x 0	16	32	46	58								
	12"x 0	13	30	44	57	69							
	16"x 0	7	26	41	55	67	90						
	20"x 0	1	21	38	52	65	88	109					
	24"x 0	1	16	34	49	62	86	108	129				
	30"x 0	8	28	44	58	83	106	127	154				
	36"x 0	1	1	22	39	54	80	103	124	153	179		
	42"x 0	1	1	15	33	49	77	100	122	151	177	201	
	48"x 0	1	1	7	27	44	73	97	120	149	176	200	222
REDUCER (LARGER PIPE RESTRAINT)	6"x 0	23											
	8"x 0	38	25										
	10"x 0	57	43	24									
	12"x 0	72	60	44	41								
	16"x 0	99	90	78	75	45							
	20"x 0	123	116	107	105	81	45						
	24"x 0	146	140	132	131	111	82	45					
	30"x 0	157	153	148	141	133	113	87	56				
	36"x 0	182	179	175	169	163	147	126	101	56			
	42"x 0	205	202	199	194	189	175	158	138	100	54		
	48"x 0	226	224	221	217	213	201	187	169	138	98	53	

NOTES:

1. THE DATA IN THE ABOVE TABLE ARE BASED UPON THE FOLLOWING INSTALLATION CONDITIONS:
   - 1A: SOIL TYPE–SAND
   - 1B: TEST PRESSURE–150 PSI
   - 1C: DEPTH OF BURY–4'
   - 1D: TRENCH TYPE–3
   - 1E: SAFETY FACTOR–1.5
   - 1F: VERTICAL OFFSET–3'
   - 1G: MINIMUM PIPE LENGTH ALONG TEE RUN–5'
2. THE RESTRAINED PIPE LENGTHS APPLY TO DUCTILE IRON AND PVC PIPE.
3. ALL JOINTS BETWEEN UPPER AND LOWER BENDS SHALL BE RESTRAINED.
4. RESTRAINED PIPE LENGTHS APPLY TO PIPE ON BOTH SIDES OF VALVES AND FITTINGS.

ITEM	CROSS REF.	SPEC. REF.

MIAMI-DADE COUNTY Delivering Excellence Every Day — WATER & SEWER DEPARTMENT

ISSUE DATE	APPROVED BY
04/10/2014	J.F.
07/20/2016	D.V.

STANDARD DETAIL

STANDARD REQUIREMENTS FOR WATER AND SEWER MECHANICAL THRUST RESTRAINT

GS 2.0 — SHEET 1 OF 1

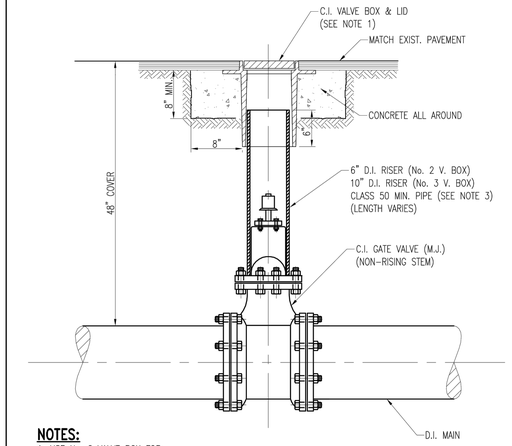

NOTES:

1. USE No. 2 VALVE BOX FOR:
   - FIRE HYDRANT VALVES
   - FIRE LINE SERVICES & DOMESTIC SERVICES
   - 2" MAINS IN EASEMENTS
   - BYPASS VALVES
2. USE No. 3 VALVE BOX FOR ALL MAIN LINE VALVES.
3. PVC C900 PIPE CAN BE USED FOR RISER IN LIEU OF DUCTILE IRON.
4. IF USED FOR RECLAIMED WATER VALVES, THE LID SHALL BE MARKED "R" AND BOTH THE LID AND THE RISER PIPE ARE TO BE COLORED PURPLE PANTONE 522C.

ITEM	CROSS REF.	SPEC. REF.
No. 3 VALVE BOX & LID	WS 3.11	
No. 2 VALVE BOX & LID	WS 3.10	

MIAMI-DADE COUNTY Delivering Excellence Every Day — WATER & SEWER DEPARTMENT

ISSUE DATE	APPROVED BY
10/10/2008	V.F.C.

STANDARD DETAIL

TYPICAL GATE VALVE SETTING (SMALLER THAN 16")

WS 1.0 — SHEET 1 OF 1

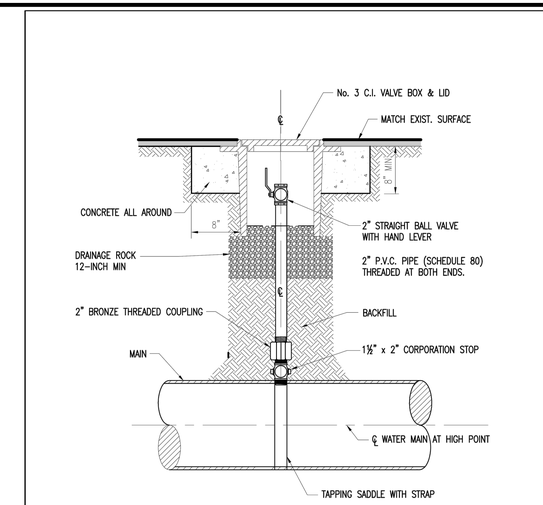

ITEM	CROSS REF.	SPEC. REF.
No. 3 VALVE BOX & LID	WS 3.11	

MIAMI-DADE COUNTY Delivering Excellence Every Day — WATER & SEWER DEPARTMENT

ISSUE DATE	APPROVED BY
10/06/2009	V.F.C.
06/09/2016	D.V.

STANDARD DETAIL

MANUAL AIR RELEASE VALVE

WS 1.60 — SHEET 1 OF 1

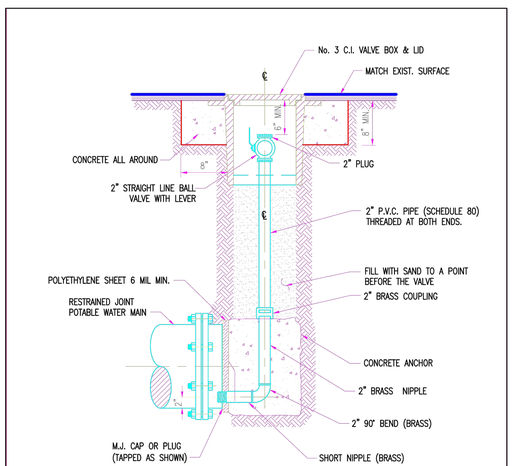

NOTES:

1. 2" TAP IN BOTTOM OF PLUG.
2. ALL BRASS TO BE "LEAD FREE".

ITEM	CROSS REF.	SPEC. REF.
NO. 3 VALVE BOX & LID	WS 3.11	
CONC. ANCHORS	GS 3.1	

MIAMI-DADE COUNTY Delivering Excellence Every Day — WATER & SEWER DEPARTMENT

ISSUE DATE	APPROVED BY
10/06/2009	V.F.C.
10/1/2017 M.K.	D.V.

STANDARD DETAIL

TYPICAL 2" FLUSHING VALVE OUTLET

WS 1.61 — SHEET 1 OF 1

THE FOLLOWING REQUIREMENTS SHALL APPLY TO ALL CASTINGS (OR FABRICATED MATERIALS) CONTAINED HEREIN:

1. SUB–COMPONENTS OF ALL CASTINGS FROM THE SAME SUPPLIER SHALL BE INTERCHANGEABLE.
2. MATING SURFACES OF ALL CASTINGS SHALL BE MACHINED, WITH NO ROCKING PERMITTED.
3. ALL CASTINGS SHALL BE IN ACCORDANCE WITH ASTM–A48, AS MODIFIED HEREIN:

A. ARTICLE 10.1.3.1. SHALL NOT APPLY, TIME LIMIT IS 4 HRS. MAXIMUM.

B. NOTIFICATION TIME LIMIT IN ARTICLE 16.2 SHALL NOT APPLY.

C. SUPPLIER SHALL PROVIDE CERTIFIED TEST RESULTS WITH EACH LOT OF CASTING SHIPPED. CERTIFICATION SHALL IDENTIFY LOT.

D. SIGNATURE IN ARTICLE 17.2 SHALL BE REQUIRED. CERTIFICATION SHALL BE SIGNED BY LICENSED PROFESSIONAL ENGINEER, OR EQUIVALENT WHEN IN FOREIGN COUNTRY.

E. SUPPLIER SHALL PROVIDE CAST TEST BAR, SUITABLE FOR MACHINING, FOR EACH FOUNDRY LOT OF CASTINGS SHIPPED. TEST BAR SHALL IDENTIFY LOT AND SHALL BE SUITABLE FOR CLASS NO. 35B SPECIMEN.

4. MANUFATURER'S NAME AND LOCATION (I.E. FOUNDRY AND COUNTRY OF ORIGIN) SHALL BE PERMANENTLY CAST ON THE BOTTOM OF ALL CAST COVERS AND LIDS.
5. SUPPLIER OF FABRICATED ITEMS (I.E. NON–CAST ITEMS) SHALL PERMANENTLY MARK HIS NAME AND DATE OF MANUFACTURE ON MATERIAL, BY WELDING, STAMPING OR OTHER METHOD APPROVED BY THE DEPARTMENT.

ITEM	CROSS REF.	SPEC. REF.

MIAMI-DADE COUNTY Delivering Excellence Every Day

ISSUE DATE	APPROVED BY
6/01/2015	J.F.

STANDARD DETAIL

CASTING STANDARDS

WS 2.05 — SHEET 1 OF 1

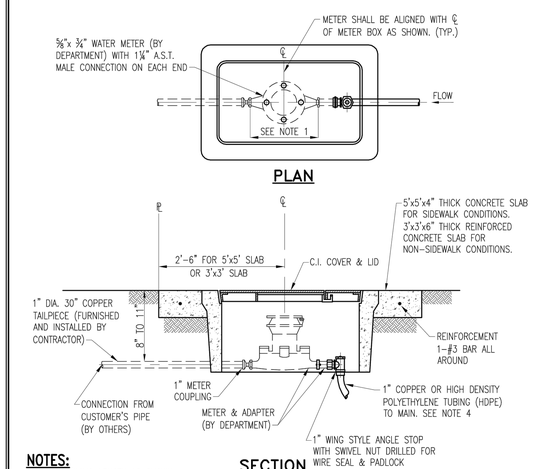

NOTES:

1. METER LAYING LENGTH AS SHOWN: 10¾" (OUTLET TO OUTLET) FOR ⅝" OR 1" METER (11" WITH GASKETS).
2. USE SINGLE METER BOX.
3. CONCRETE SLAB REINFORCEMENT SHALL HAVE 1–#3 BAR ALL AROUND.
4. USE 1" BLUE COLOR HDPE OR 1" COPPER TUBING FOR POTABLE WATER SERVICE. USE ONLY 1" PURPLE COLOR HDPE (NO COPPER ALLOWED) FOR RECLAIMED WATER SERVICE.
5. METERS WILL NOT BE INSTALLED IF THE METER BOX IS IN A DRIVING SURFACE.
6. WHEN USING 1" HDPE SERVICE A TEN GAUGE BLUE (PURPLE FOR RECLAIMED WATER) DIRECT BURY STANDARD COPPER TRACE WIRE IS TO BE TAPED CONTINUOUSLY WITH POLY OR DUCT TAPE TO THE SERVICE FOR LOCATION PURPOSES. WIRE SHALL BE ATTACHED TO WATER MAIN. WIRE MUST EXTEND INTO METER BOX.
7. IF USED FOR RECLAIMED WATER, THE COVER SHALL BE PERMANENTLY EMBOSSED WITH THE WORDING: "RECLAIMED WATER–DO NOT DRINK–NO BEBER–PA BOUE".
8. ALL SPACER TUBES AND TAILPIECES SHALL BE FURNISHED AND INSTALLED BY CONTRACTOR.
9. REPAIRS TO SLAB AND METER ARE PROHIBITED.

ITEM	CROSS REF.	SPEC. REF.
1" SERVICE CONNECTION	WS 4.11	
TYPICAL SERVICE PLAN	WS 4.10	

MIAMI-DADE COUNTY Delivering Excellence Every Day — WATER & SEWER DEPARTMENT

ISSUE DATE	APPROVED BY
06/01/2008	V.F.C.

STANDARD DETAIL

SINGLE METER BOX INSTALLATION

WS 2.10 — SHEET 1 OF 3

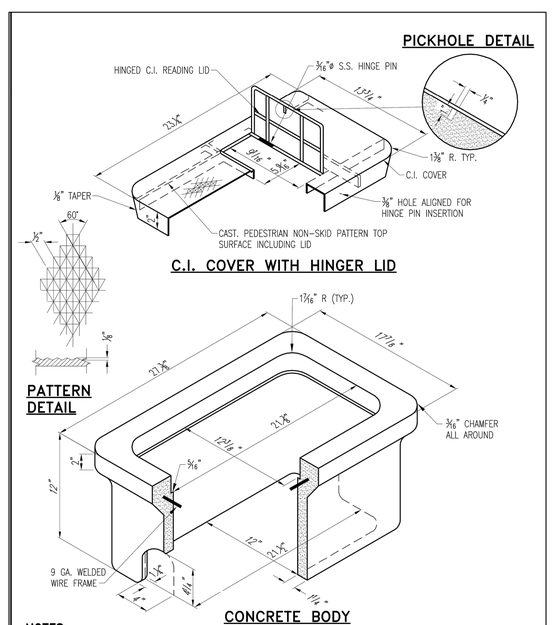

NOTES:

1. SOME DIMENSIONS MAY VARY WITH DEPARTMENT APPROVAL. LID W.T.= MAX. 53 LBS., MIN. 42 LBS.
2. METERS WILL NOT BE INSTALLED IF THE METER BOX IS IN A DRIVING SURFACE.

ITEM	CROSS REF.	SPEC. REF.
1" SERVICE CONNECTION	WS 4.11	
TYPICAL SERVICE PLAN	WS 4.10	

MIAMI-DADE COUNTY Delivering Excellence Every Day — WATER & SEWER DEPARTMENT

ISSUE DATE	APPROVED BY
06/01/2008	V.F.C.

STANDARD DETAIL

SINGLE METER BOX DETAIL

WS 2.10 — SHEET 2 OF 3

THE OFFICIAL RECORD OF THIS SHEET IS THE ELECTRONIC FILE DIGITALLY SIGNED AND SEALED UNDER RULE 61G15-23.004, F.A.C.

File Name: I:\MIA\PRJ\00019356\700_CADD\Details.dwg – (Plotted by: Sharifuzzaman, Mohammed on Friday, February 10, 2023 10:04:33 AM)

H. W. LOCHNER, INC.
CONSULTING ENGINEERS AND PLANNERS
8750 NW 36th STREET - SUITE 360
MIAMI, FLORIDA - 33178

MIAMI GARDENS WATER MAIN IMPROVEMENTS
CITY OF OPA-LOCKA

GENERAL DETAILS

NO	DATE	REVISION	BY	NO	DATE	REVISION	BY
–	–	.	–				

MOHAMMED SHARIFUZZAMAN, P.E.
STATE OF FLORIDA PROFESSIONAL ENGINEER
LICENSE NO. 67640

DATE: APR 22, 2022

SCALE: AS SHOWN

PROJECT No 19356

SHEET C14

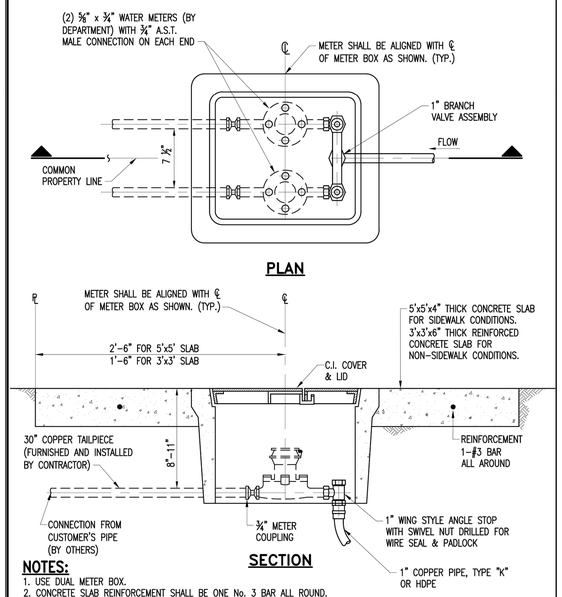

NOTES:

1. USE DUAL METER BOX.
2. CONCRETE SLAB REINFORCEMENT SHALL BE ONE No. 3 BAR ALL ROUND.
3. FOR SIDEWALK CONDITIONS, METER BOX SHALL BE INSTALLED IN A SINGLE CONCRETE SIDEWALK FLAG.
4. METERS WILL NOT BE INSTALLED IF THE METER BOX IS IN A DRIVING SURFACE.
5. REPAIRS TO CONCRETE SLAB AND METER BOX ARE PROHIBITED.
6. ALL SPACER TUBES AND TAILPIECES SHALL BE FURNISHED AND INSTALLED BY CONTRACTOR.

ITEM	CROSS REF.	SPEC. REF.
1" SERVICE CONNECTION	WS 4.11	
TYPICAL SERVICE PLAN	WS 4.10	

MIAMI-DADE COUNTY — Delivering Excellence Every Day — WATER & SEWER DEPARTMENT

ISSUE DATE	APPROVED BY
10/29/2010	V.F.C.

STANDARD DETAIL

DUAL ⅝" METER INSTALLATION FOR TYPICAL ¾" DOMESTIC SERVICE LINES

WS 2.12 — SHEET 2 OF 2

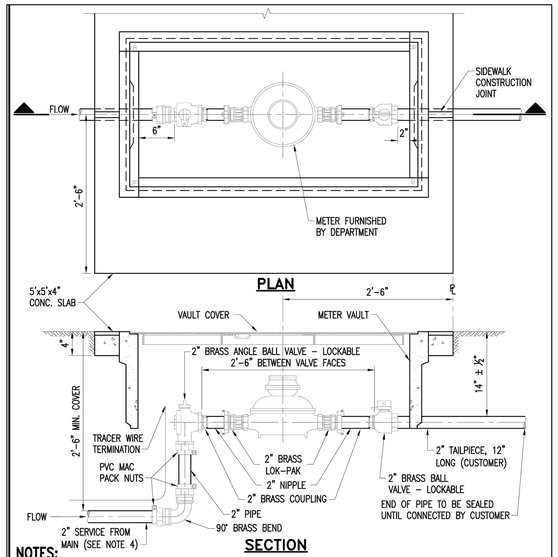

NOTES:

1. USE 2'x4' METER VAULT.
2. METER BOX TO BE IN 5'x5'x4" THICK CONCRETE SLAB WITH 6x6-W1.4xW1.4 W.W.M.
3. A TEN GAUGE BLUE (PURPLE FOR RECLAIMED WATER) DIRECT BURY STRANDED COPPER TRACER WIRE TO BE TAPED CONTINUOUSLY WITH POLY OR DUCT TAPE TO THE SERVICE FOR LOCATION PURPOSES. WIRE MUST BE ATTACHED TO WATER MAIN AND EXTEND INTO THE WATER METER BOX.
4. USE 2" BLUE COLOR HDPE FOR POTABLE WATER SERVICE. USE 2" PURPLE COLOR HDPE FOR RECLAIMED WATER SERVICE.
5. METERS WILL NOT BE INSTALLED IF THE METER BOX IS LOCATED ON A DRIVING SURFACE.
6. METER BOX SHALL BE INSTALLED BETWEEN TWO SEPARATE FLAGS OF CONCRETE.
7. ALL BRASS COMPONENTS SHALL BE MARKED "NL" MEETING THE S3874 AMENDMENT TO THE SAFE DRINKING WATER ACT.

ITEM	CROSS REF.	SPEC. REF.
TYPICAL SERVICE PLAN	WS 4.10	
2'x4' METER VAULT	WS 2.17	

MIAMI-DADE COUNTY — Delivering Excellence Every Day — WATER & SEWER DEPARTMENT

ISSUE DATE	APPROVED BY
05/31/2013	E.A.V.

STANDARD DETAIL

TYPICAL 2" SERVICE INSTALLATION WITH A 2" METER

WS 2.16 — SHEET 1 OF 4

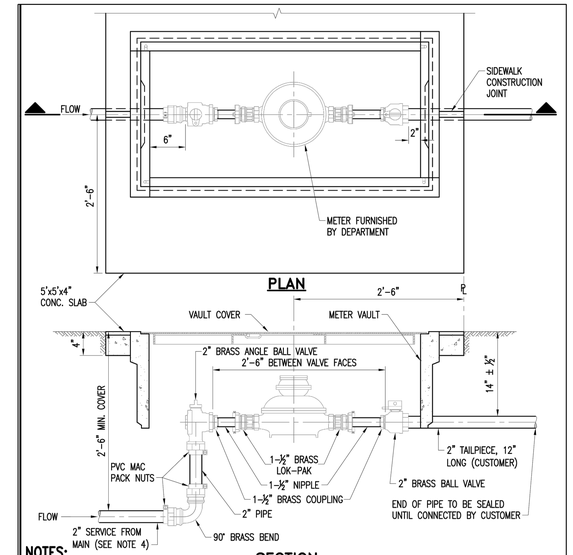

NOTES:

1. USE 2'x4' METER VAULT.
2. METER BOX TO BE IN 5'x5'x4" THICK CONCRETE SLAB WITH 6x6-W1.4xW1.4 W.W.M.
3. A TEN GAUGE DIRECT BURY STRANDED COPPER TRACER WIRE TO BE TAPED CONTINUOUSLY WITH POLY OR DUCT TAPE TO THE SERVICE FOR LOCATION PURPOSES. WIRE MUST BE ATTACHED TO RECLAIMED WATER MAIN AND EXTEND INTO THE METER BOX.
4. USE 2" BLUE COLOR HDPE FOR POTABLE WATER SERVICE. USE 2" PURPLE COLOR HDPE FOR RECLAIMED WATER SERVICE.
5. METERS WILL NOT BE INSTALLED IF THE METER BOX IS IN A DRIVING SURFACE.
6. FOR SIDEWALK CONDITIONS, METER BOX SHALL BE INSTALLED IN A SINGLE CONCRETE SIDEWALK FLAG.
7. ALL BRASS COMPONENTS SHALL BE MARKED "NL" MEETING THE S3874 AMENDMENT TO THE SAFE DRINKING WATER ACT.

ITEM	CROSS REF.	SPEC. REF.
TYPICAL SERVICE PLAN	WS4.10	
2'x4' METER VAULT	WS2.17	

MIAMI-DADE COUNTY — Delivering Excellence Every Day — WATER & SEWER DEPARTMENT

ISSUE DATE	APPROVED BY
5/31/2013	E.A.V.

STANDARD DETAIL

TYPICAL 2" SERVICE INSTALLATION WITH A 1-½" METER

WS 2.16 — SHEET 2 OF 4

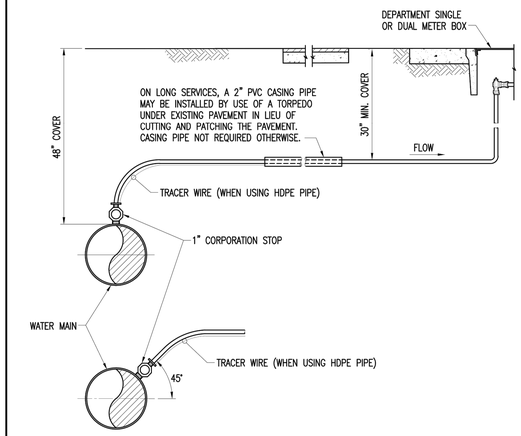

NOTES:

1. CONTRACTOR HAS THE OPTION OF TAPPING AT 45°.
2. METERS WILL NOT BE INSTALLED IF THE METER BOX IS LOCATED ON A DRIVING SURFACE.
3. PROVIDE 36" MIN. COVER FOR SERVICES INSTALLED WITHIN ARTERIAL ROADS (INCLUDING ALL SECTION LINE AND HALF-SECTION LINE ROADS).
4. INSTALL TAPPING SADDLE FOR: THICKNESS CLASS D.I. MAINS 4" & SMALLER, PRESSURE CLASS D.I. WATER MAINS 6" & SMALLER, OR WHEN MAIN IS PVC, HDPE OR AC PIPE.
5. WHEN MAIN IS SHALLOWER THAN 48", A ⅛" OR ¼" BEND MUST BE USED.
6. WHEN USING HDPE SERVICE PIPE, A TEN GAUGE BLUE TRACER WIRE TO BE TAPED TO THE PIPE EVERY 2 FT. WITH POLY OR DUCT TAPE. TRACER WIRE TO BE MECHANICALLY FASTENED TO THE MAIN WHEN A METAL WATER MAIN IS USED.
7. USE SERVICE SADDLE AND TAPPING SLEEVE FOR PVC RECLAIMED WATER MAIN.

ITEM	CROSS REF.	SPEC. REF.
TYPICAL SERVICE PLAN	WS. 4.10	

MIAMI-DADE COUNTY — Delivering Excellence Every Day

ISSUE DATE	APPROVED BY
1/3/2011	V.F.C.

STANDARD DETAIL

TYPICAL 1" SERVICE CONNECTION (COPPER OR HDPE)

WS 2.16 — SHEET 3 OF 4

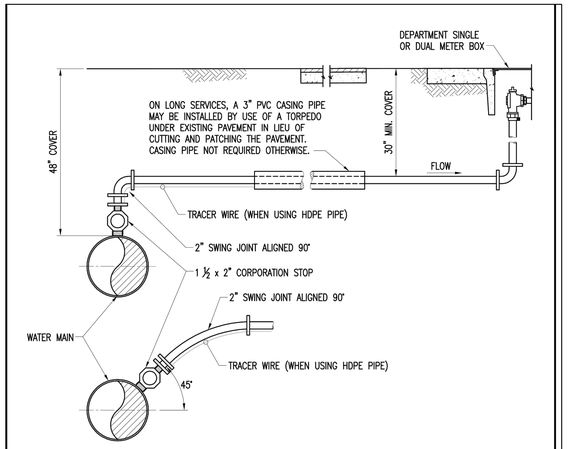

NOTES:

1. CONTRACTOR HAS THE OPTION OF TAPPING AT 45°.
2. METERS WILL NOT BE INSTALLED IF THE METER BOX IS LOCATED ON A DRIVING SURFACE.
3. PROVIDE 36" MIN. COVER FOR SERVICES INSTALLED WITHIN ARTERIAL ROADS (INCLUDING ALL SECTION LINE AND HALF-SECTION LINE ROADS).
4. INSTALL TAPPING SADDLE FOR: THICKNESS CLASS D.I. MAINS 4" & SMALLER, PRESSURE CLASS D.I. WATER MAINS 8" & SMALLER, OR WHEN MAIN IS PVC, HDPE OR AC PIPE.
5. WHEN MAIN IS SHALLOWER THAN 48", A ⅛" OR ¼" BEND MUST BE USED.
6. WHEN USING HDPE SERVICE PIPE, A TEN GAUGE BLUE TRACER WIRE TO BE TAPED TO THE PIPE EVERY 2 FT. WITH POLY OR DUCT TAPE. TRACER WIRE TO BE MECHANICALLY FASTENED TO THE MAIN WHEN A METAL WATER MAIN IS USED.
7. USE SERVICE SADDLE AND TAPPING SLEEVE FOR PVC RECLAIMED WATER MAIN.

ITEM	CROSS REF.	SPEC. REF.
DUAL METER BOX	WS 2.12	
SINGLE METER BOX	WS 2.10	3.02

MIAMI-DADE COUNTY — Delivering Excellence Every Day — WATER & SEWER DEPARTMENT

ISSUE DATE	APPROVED BY
12/16/2009	V.F.C.

STANDARD DETAIL

TYPICAL 2" SERVICE CONNECTION (HDPE)

WS 2.16 — SHEET 4 OF 4

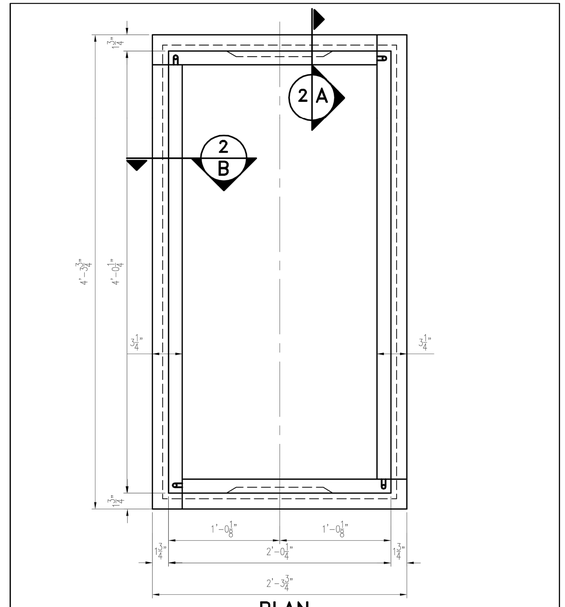

NOTES:

1. FOR SECTION A-A AND B-B SEE SHT No. 2
2. FOR STEEL COVER PLATE DETAILS SEE SHT. NO.3
3. PRECAST VAULT ONLY

ITEM	CROSS REF.	SPEC. REF.
XXXXX		

MIAMI-DADE COUNTY — Delivering Excellence Every Day

ISSUE DATE	APPROVED BY
11/01/2006	V. E. F.

STANDARD DETAIL

ASSEMBLED 2' x 4' VAULT (PRECAST SECTIONS)

WS 2.17 — SHEET 1 OF 5

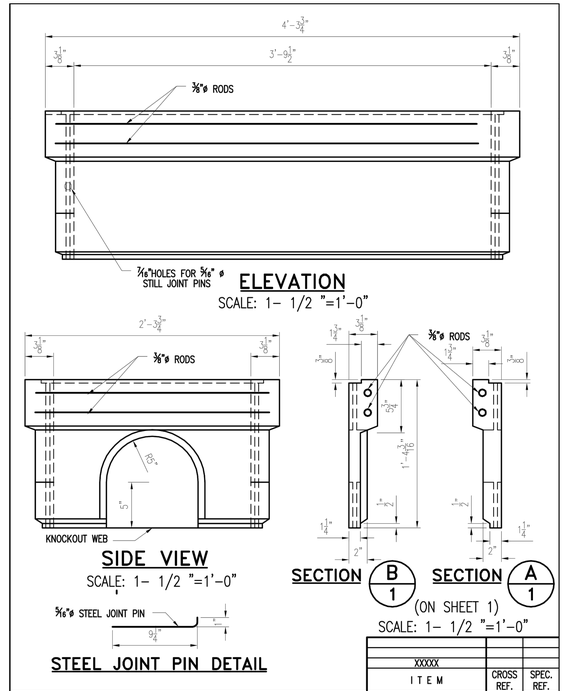

ITEM	CROSS REF.	SPEC. REF.
XXXXX		

MIAMI-DADE COUNTY — Delivering Excellence Every Day

ISSUE DATE	APPROVED BY
11/01/2006	V. E. F.

STANDARD DETAIL

ASSEMBLED 2'x4' VAULT (PRECAST SECTIONS)

WS 2.17 — SHEET 2 OF 5

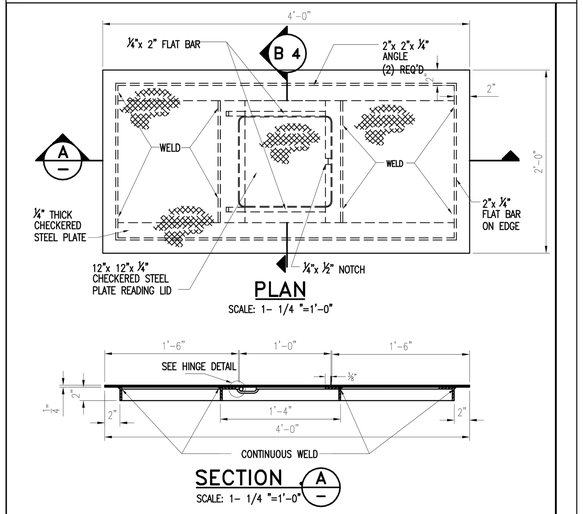

NOTES:

1. SUPPLIER SHALL PERMANENTLY MARK HIS NAME AND DATE OF MANUFACTURE ON BOTTOM OF EACH COVER BY WELDING, STAMPING OR AS APPROVED BY THE DEPARTMENT
2. ALL WELDS SHALL BE CONTINUOUS.
3. FOLLOWING FABRICATION THE ENTIRE UNIT SHALL BE THOROUGHLY CLEANED AND HOT-DIP GAVANIZED.

ITEM	CROSS REF.	SPEC. REF.
XXXXX		

MIAMI-DADE COUNTY — Delivering Excellence Every Day

ISSUE DATE	APPROVED BY
11/01/2006	V. E. F.

STANDARD DETAIL

STANDARD 2' x 4' STEEL COVER PLATE FOR NON-TRAFFIC VAULT

WS 2.17 — SHEET 3 OF 5

H. W. LOCHNER, INC.
CONSULTING ENGINEERS AND PLANNERS
8750 NW 36th STREET - SUITE 360
MIAMI, FLORIDA - 33178

MIAMI GARDENS WATER MAIN IMPROVEMENTS
CITY OF OPA-LOCKA

GENERAL DETAILS

NO	DATE	REVISION	BY	NO	DATE	REVISION	BY
–	–	.	–				

MOHAMMED SHARIFUZZAMAN, P.E.
STATE OF FLORIDA PROFESSIONAL ENGINEER
LICENSE NO. 67640

DATE: APR 22, 2022

SCALE: AS SHOWN

PROJECT No 19356

SHEET C15

File Name: I:\MIA\PRJ\000019356\700_CADD\Details.dwg - (Plotted by: Sharifuzzaman, Mohammed on Friday, February 10, 2023 10:05:55 AM)
THE OFFICIAL RECORD OF THIS SHEET IS THE ELECTRONIC FILE DIGITALLY SIGNED AND SEALED UNDER RULE 61G15-23.004, F.A.C.

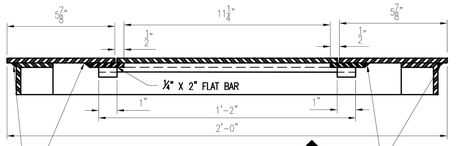

SECTION A/3
(ON SHEET 3)
SCALE: 3 "=1'-0"

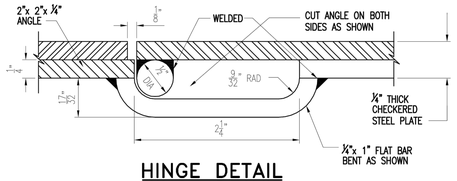

HINGE DETAIL
SCALE: 1 "=1'-0"

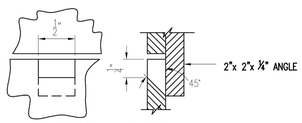

NOTCH DETAIL
SCALE: 1 "=1'-0"
(IN HINGED PART OF 2'x 4' COVER)

XXXXX ITEM	CROSS REF.	SPEC. REF.

MIAMI-DADE COUNTY Delivering Excellence Every Day

ISSUE DATE	APPROVED BY
11/01/2006	V. E. F.

STANDARD DETAIL
DETAILS OF 2'x4' STEEL COVER PLATE FOR NON-TRAFFIC VAULT

WS 2.17
SHEET 4 OF 5

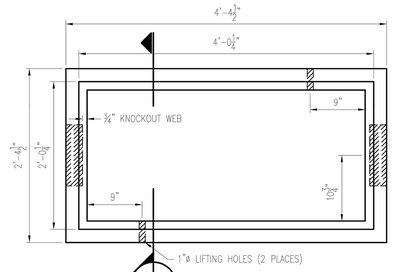

PLAN
SCALE: 1 "=1'-0"

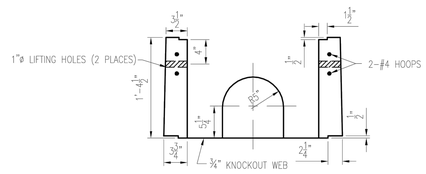

SECTION C
SCALE: 1"=1'-0"

XXXXX ITEM	CROSS REF.	SPEC. REF.

MIAMI-DADE COUNTY Delivering Excellence Every Day

ISSUE DATE	APPROVED BY
11/01/2006	V. E. F.

STANDARD DETAIL
2' x 4' PRECAST METER VAULT FOR NO-TRAFFIC AREAS)

WS 2.17
SHEET 5 OF 5

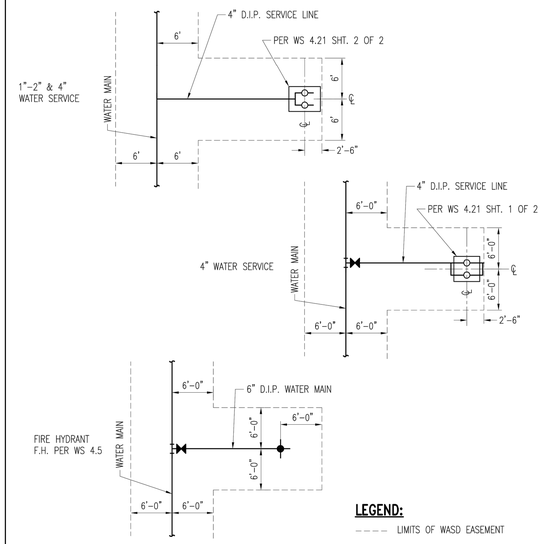

LEGEND:
- - - - LIMITS OF WASD EASEMENT

ITEM	CROSS REF.	SPEC. REF.

MIAMI-DADE COUNTY Delivering Excellence Every Day
WATER & SEWER DEPARTMENT

ISSUE DATE	APPROVED BY
10/05/2009	V.F.C.

STANDARD DETAIL
EASEMENT REQUIREMENTS FOR SERVICE & FIRE HYDRANT

WS 2.21
SHEET 1 OF 3

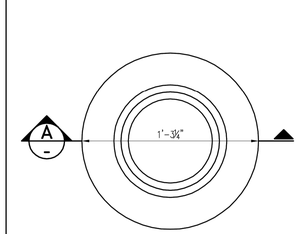

BOX PLAN
N.T.S.

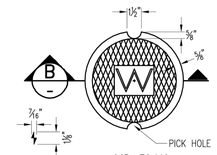

LID PLAN
N.T.S.

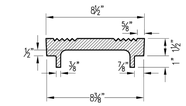

SECTION B
N.T.S.

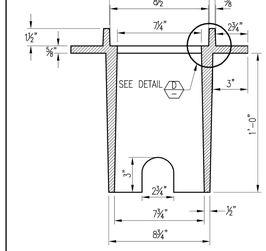

SECTION A
N.T.S.

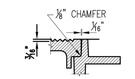

DETAIL D
N.T.S.

NOTES:
1. FOUNDRY AND LOCATION SHALL BE CAST ON BOTTOM OF LID. (SEE WS 2.05)
2. MACHINE FINISH BOTTOM OF COVER AND SEAT OF FRAME.
3. ALL DIMENSIONS ARE NET CASTING, NOT PATTERN.
4. IF USED FOR RECLAIMED WATER, THE CAST IRON LID AND BOX ARE TO BE COLORED PURPLE PANTONE 522C, AND THE LETTER "W" REPLACED WITH "R".

ITEM	CROSS REF.	SPEC. REF.

MIAMI-DADE COUNTY Delivering Excellence Every Day
WATER & SEWER DEPARTMENT

ISSUE DATE	APPROVED BY
06/01/2008	V.F.C.

STANDARD DETAIL
No. 2 C.I. VALVE BOX AND LID

WS 3.10
SHEET 1 OF 1

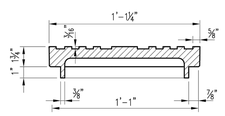

SECTION VIEW
N.T.S.

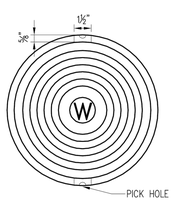

PLAN VIEW
N.T.S.

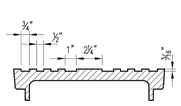

DETAIL OF LID TOP
N.T.S.

NOTES:
1. MACHINE FINISH BOTTOM OF COVER AND SEAT OF FRAME.
2. ALL DIMENSIONS ARE NET CASTING, NOT PATTERN.
3. FOUNDRY AND LOCATION SHALL BE CAST ON BOTTOM OF THE LID. (SEE WS 2.05)
4. IF USED FOR RECLAIMED WATER, THE CAST IRON LID IS TO BE COLORED PURPLE PANTONE 522C, AND THE LETTER "W" REPLACED WITH "R".

ITEM	CROSS REF.	SPEC. REF.

MIAMI-DADE COUNTY Delivering Excellence Every Day
WATER & SEWER DEPARTMENT

ISSUE DATE	APPROVED BY
06/01/2008	V.F.C.

STANDARD DETAIL
No. 3 C.I. LID

WS 3.11
SHEET 2 OF 2

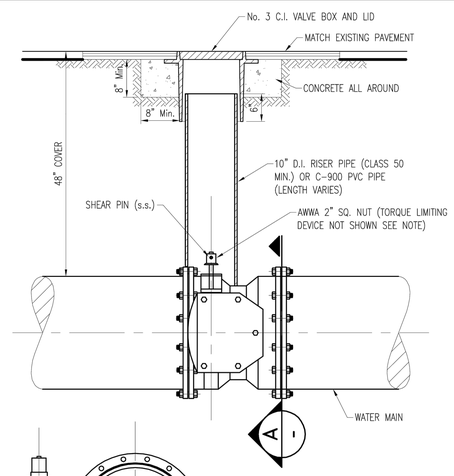

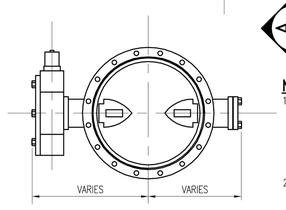

SECTION A
N.T.S.

NOTES:
1. TORQUE LIMITING DEVICE SHALL BE HERMETICALLY SEALED IN C.I. HOUSING, PERMANENTLY LUBRICATED, FACTORY SET TO TRIP BETWEEN 200-220 FT. LBS., COATED INSIDE AND OUT WITH 2-PART EPOXY AND ROTATION DIRECTION PERMANENTLY SHOWN; AS MANUF. BY ANNSPACH CONTROLS CO., OR APPROVED EQUAL.
2. IF USED FOR RECLAIMED WATER VALVES, THE LID SHALL BE MARKED "R" AND BOTH THE LID AND THE RISER PIPE ARE TO BE COLORED PURPLE PANTONE 522C.

ITEM	CROSS REF.	SPEC. REF.

MIAMI-DADE COUNTY Delivering Excellence Every Day
WATER & SEWER DEPARTMENT

ISSUE DATE	APPROVED BY
10/10/2008	V.F.C.

STANDARD DETAIL
TYPICAL M.J. BUTTERFLY VALVE SETTING (24" AND SMALLER)

WS 3.12
SHEET 1 OF 1

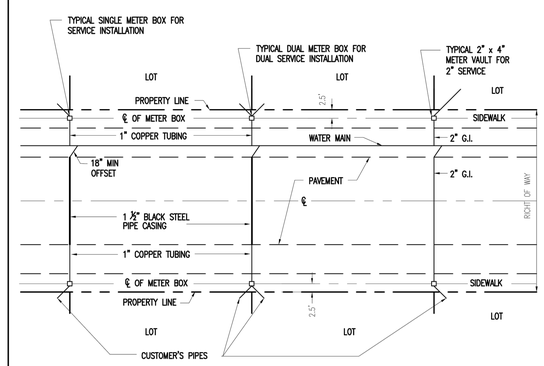

PLAN

NOTE: METERS WILL NOT BE INSTALLED IF THE METER BOX IS IN A DRIVING SURFACE.

ITEM	CROSS REF.	SPEC. REF.

MIAMI-DADE COUNTY Delivering Excellence Every Day

ISSUE DATE	APPROVED BY
11/01/2006	V.E.F.

STANDARD DETAIL
TYPICAL SERVICE PLAN

WS 4.10
SHEET 1 OF 1

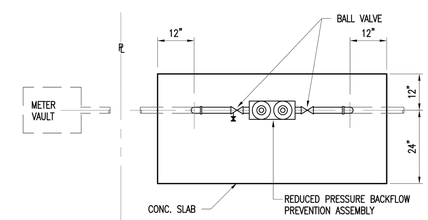

PLAN VIEW

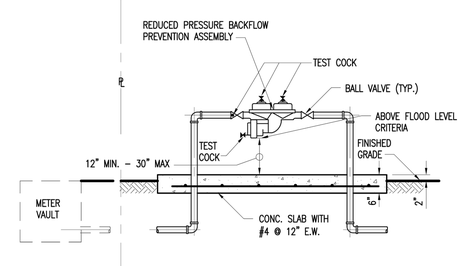

ELEVATION VIEW

GUARD POST DETAIL ITEM	WS 4.5 CROSS REF.	SPEC. REF.

MIAMI-DADE COUNTY Delivering Excellence Every Day

ISSUE DATE	APPROVED BY
6/26/2012	F.A.

STANDARD DETAIL
REDUCED PRESSURE ZONE BACKFLOW PREVENTER FOR WATER SERVICE 3/4" THRU 2"

WS 4.18
SHEET 1 OF 5

H. W. LOCHNER, INC.
CONSULTING ENGINEERS AND PLANNERS
8750 NW 36th STREET - SUITE 360
MIAMI, FLORIDA - 33178

MIAMI GARDENS WATER MAIN IMPROVEMENTS
CITY OF OPA-LOCKA

GENERAL DETAILS

NO	DATE	REVISION	BY	NO	DATE	REVISION	BY
–	–	.	–				

MOHAMMED SHARIFUZZAMAN, P.E.
STATE OF FLORIDA PROFESSIONAL ENGINEER
LICENSE NO. 67640

DATE: APR 22, 2022

SCALE: AS SHOWN
PROJECT No 19356
SHEET C16

File Name: I:\WA\PRJ\000019356\700_CAD\Details.dwg - (Plotted by: Sharifuzzaman, Mohammed on Friday, February 10, 2023 10:06:29 AM)

THE OFFICIAL RECORD OF THIS SHEET IS THE ELECTRONIC FILE DIGITALLY SIGNED AND SEALED UNDER RULE 61G15-23.004, F.A.C.

NOTES:

1-. THE ASSEMBLY SHALL BE INSTALLED WITH MINIMUM HORIZONTAL CLEARANCES OF 30 INCHES FREE FROM OBSTRUCTIONS IN ALL DIRECTIONS.

2-. GUARD POSTS SHALL BE INSTALLED IF THE ASSEMBLY IS EXPOSED TO POSSIBLE DAMAGE FROM VEHICULAR TRAFFIC, AS DETERMINED BY THE DEPARTMENT.

3-. THE ASSEMBLY SHALL BE INSTALLED IN AN ACCESSIBLE LOCATION, APPROVED BY THE DEPARTMENT.

4-. ADJUSTABLE PIPE SADDLE SUPPORT (GRINNELL FIG. 264, OR EQUAL) SIZED TO FIT CURVATURE OF DOUBLE DETECTOR CHECK VALVE ASSEMBLY, WITH GALVANIZED STEEL PIPE AND FLOOR FLANGE. ATTACH FLOOR FLANGE TO CONCRETE SLAB WITH GALVANIZED EXPANSION BOLTS.

5-. THE DEPARTMENT SHALL HAVE UNRESTRICTED AND CONTINUOUS ACCESS TO THE BACKFLOW PREVENTION ASSEMBLY.

6-. PIPING 2" AND SMALLER SHALL BE SCHEDULE 40 BRASS OR TYPE K COPPER PIPE WITH FITTINGS. PIPING 2½" AND LARGER SHALL BE DUCTILE IRON PIPE WITH FLANGED FITTINGS. ALL PIPING SHALL BE IN ACCORDANCE WITH WASD CONSTRUCTION SPECIFICATIONS FOR DONATION WATER MAINS, PVC PIPING IS NOT ACCEPTED BY WASD.

7-. ALL OUTLETS SHALL BE PLUGGED WITH BRASS PLUGS.

8-. ALL ABOVE GROUND PIPING AND EQUIPMENT, EXCEPT FOR BRASS AND STAINLESS STEEL PORTIONS, SHALL BE FINISHED WITH BLUE ENAMEL PAINT (KOP-COAT 0508 LEAD-FREE) IN ACCORDANCE WITH DEPARTMENT STANDARDS.

9-. REFER TO ATTACHED LIST (WS 4.18, SHEETS 4 AND 5 OF 5) OF APPROVED BACKFLOW PREVENTION ASSEMBLIES.

10.- COPPER ALLOY MATERIALS SHALL BE "LEAD FREE" AND IN FULL COMPLIANCE WITH THE FEDERAL "REDUCTION OF LEAD IN DRINKING WATER ACT".

ITEM	CROSS REF.	SPEC. REF.
GUARD POST DETAIL	WS 4.5	

ISSUE DATE	APPROVED BY	STANDARD DETAIL	
8/29/2012	F.A.	REDUCED PRESSURE ZONE BACKFLOW PREVENTER FOR WATER SERVICE - NOTES -	WS 4.18 SHEET 3 OF 5

MIAMI-DADE COUNTY Delivering Excellence Every Day

MANUFACTURER	REDUCED PRESSURE ZONE ASSEMBLY (RPZA) ¾" - 2"	REDUCED PRESSURE ZONE ASSEMBLY (RPZA) 2½" - 10"	REDUCED PRESSURE DETECTOR ASSEMBLY(RPDA) 2"	REDUCED PRESSURE DETECTOR ASSEMBLY(RPDA) 2½" - 10"	DOUBLE CHECK VALVE ASSEMBLY (DCVA) ¾" - 2"	DOUBLE CHECK VALVE ASSEMBLY (DCVA) 2½" - 10"	DOUBLE CHECK DETECTOR ASSEMBLY (DCDA) 2"	DOUBLE CHECK DETECTOR ASSEMBLY (DCDA) 2½" - 10"	PRESSURE VACCUM BREAKER (PVB) 3/4" - 2"
AMES 875 NATIONAL DR. STE. #107 SACRAMENTO, CA. 95834 (916)928-0123 WWW.AMESFIREWATER.COM	4000B	4000SS Colt 400 Maxim 400	N/A	5000SS Colt 500 Maxim 500	2000B 2001	2000SS Colt 200 Maxim 200	3000B	3000SS Colt 300 Maxim 300	A-200
A.R.I. WWW.ARIVALVES.COM (553)269-9653	RP-500	N/A	N/A	N/A	DC-500	N/A	N/A	N/A	N/A
CONBRACO P.O. BOX 247 MATTEWS, NC. 28106 (704)841-6000 WWW.APOLLOVALVES.COM	40-200 4A-200	4A-200 4AN-200 4D-200	N/A	4A-700 4AN-700 4D-700	40-100 4A-100	4A-100 4AN-100 4S-100	N/A	4A-600 4AN-600 4S-600	40-50(X)-02 PVB
FEBCO P.O. BOX 8070 FRESNO, CA. 93747 (559)441-5300 WWW.FEBCOONLINE.COM	825Y 860	760 880V	N/A	N/A	805Y 850	750 857 870V	858	858 876V	765 745 766
FLOMATIC 15 PRUYN'S ISLAND DR. GLENS FALLS, NY. 12801 (800)833-2040 WWW.FLOWMATIC.COM	RPZE RPZE-II	RPZ	N/A	N/A	DCVE	DCV	N/A	N/A	PVB
WATTS REGULATOR CO. 815 CHESTNUT STREET N. ANDOVER, MA. 01845 (978)688-1811 WWW.WATTS.COM	009 909 919	957 994	N/A	957RPDA 994RPDA	009 709 719	774 757	007-DCDA	007 DCDA(2½-3") 757 DCDA 774 DCDA	800 M4 008
WILKINS 1747 COMMERCE WAY PASO ROBLES, CA. 93446 (805)237-3828 WWW.ZURN.COM	375 975 XL	375 475	N/A	475DA 375DA	350 950XL 950XLT 950XLD	350 450	950XLTDA	350DA 450DA	720 420

ITEM	CROSS REF.	SPEC. REF.

ISSUE DATE	APPROVED BY	STANDARD DETAIL	
6/26/2012	F.A.	APPROVED BACKFLOW PREVENTION ASSEMBLIES - NOTES -	WS 4.18 SHEET 4 OF 5

MIAMI-DADE COUNTY Delivering Excellence Every Day

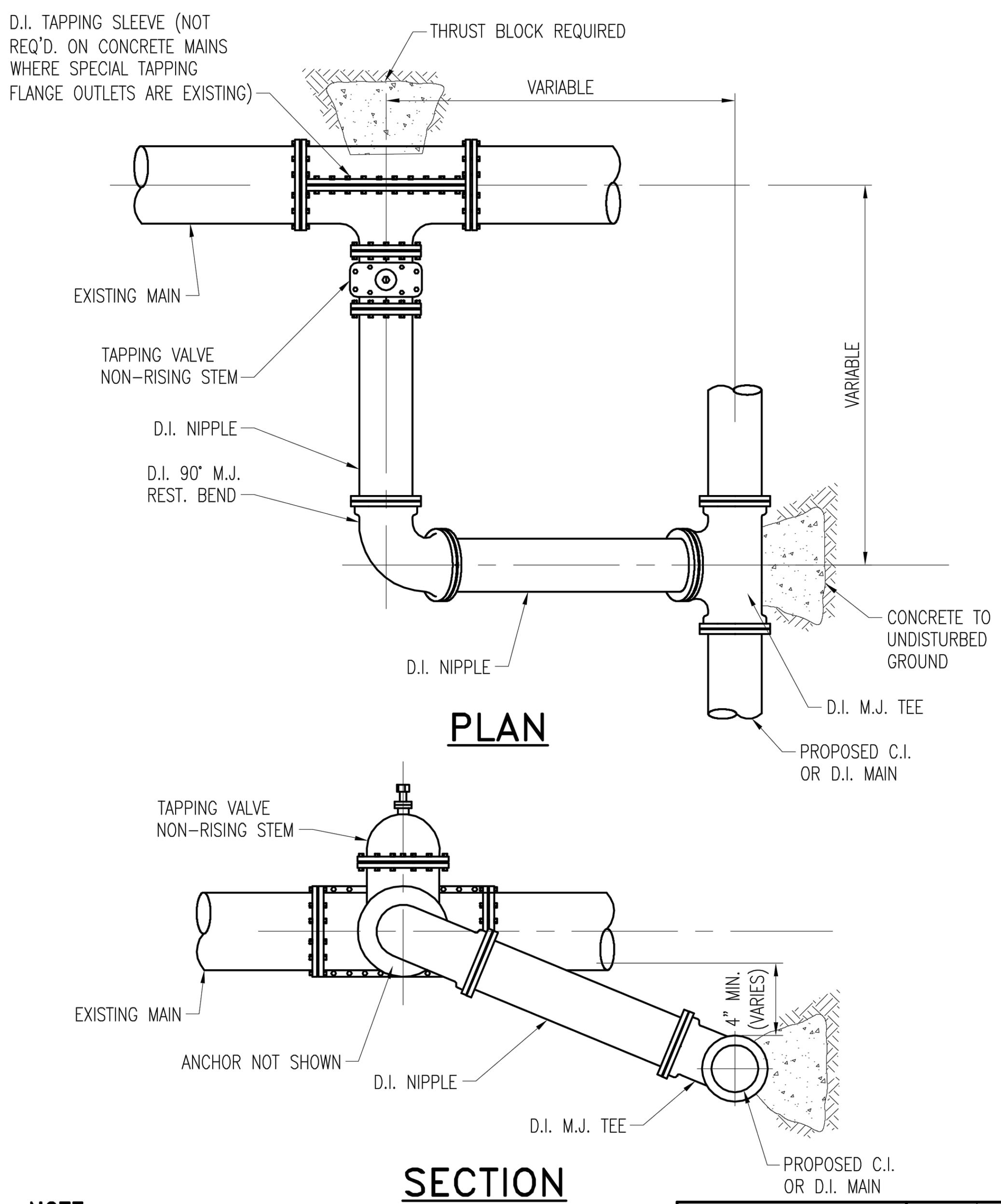

NOTE:
1. ALL PIPE AND FITTINGS TO BE RESTRAINED.

ITEM	CROSS REF.	SPEC. REF.

ISSUE DATE	APPROVED BY	STANDARD DETAIL	
06/20/2008	V.F.C.	TYPICAL CONNECTION TO EXISTING MAIN	WS 4.12 SHEET 1 OF 2

MIAMI-DADE COUNTY Delivering Excellence Every Day WATER & SEWER DEPARTMENT

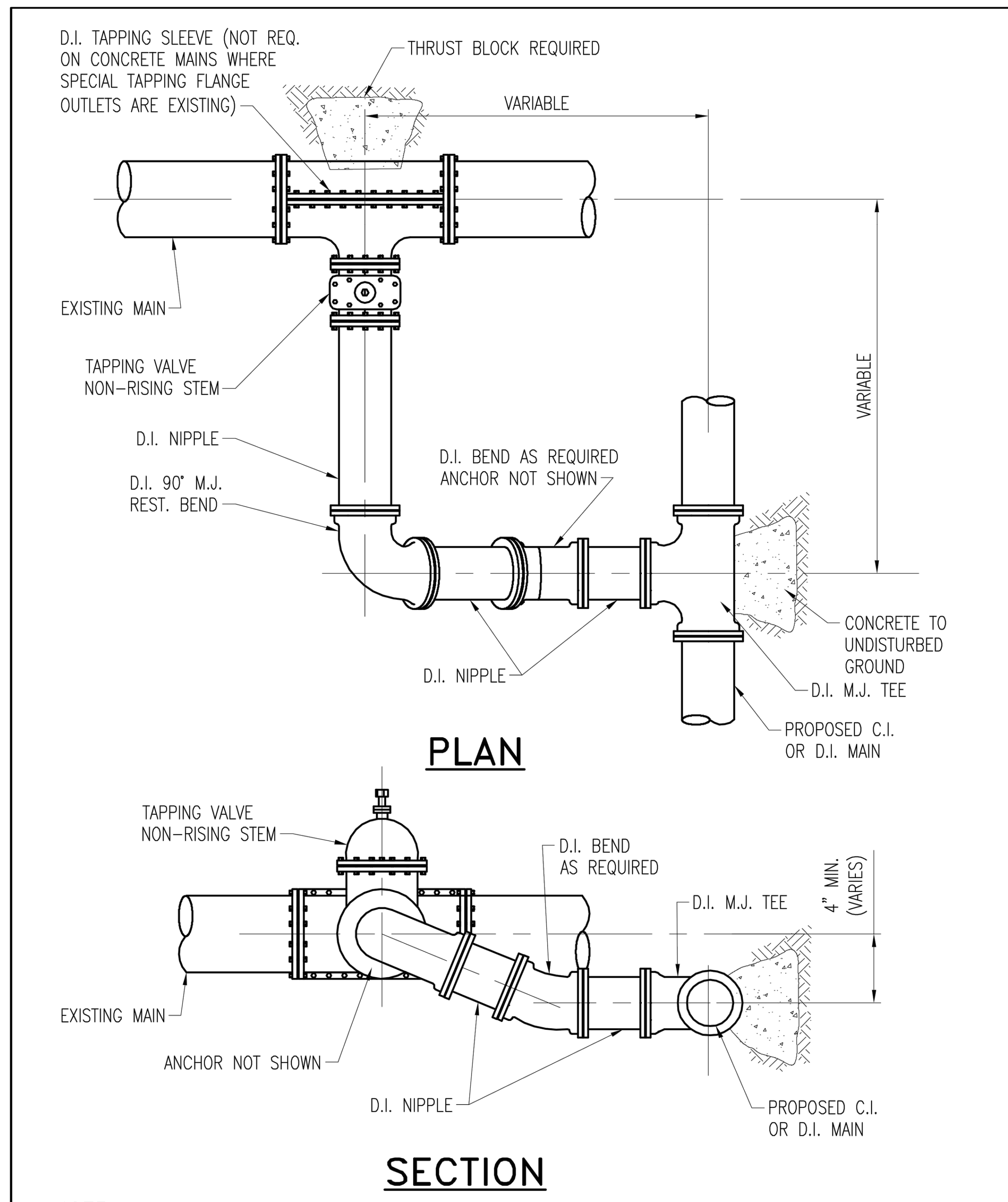

NOTE:
1. ALL PIPE AND FITTINGS TO BE RESTRAINED.

ITEM	CROSS REF.	SPEC. REF.

ISSUE DATE	APPROVED BY	STANDARD DETAIL	
06/20/2008	V.F.C.	TYPICAL CONNECTION TO EXISTING MAIN	WS 4.12 SHEET 2 OF 2

MIAMI-DADE COUNTY Delivering Excellence Every Day WATER & SEWER DEPARTMENT

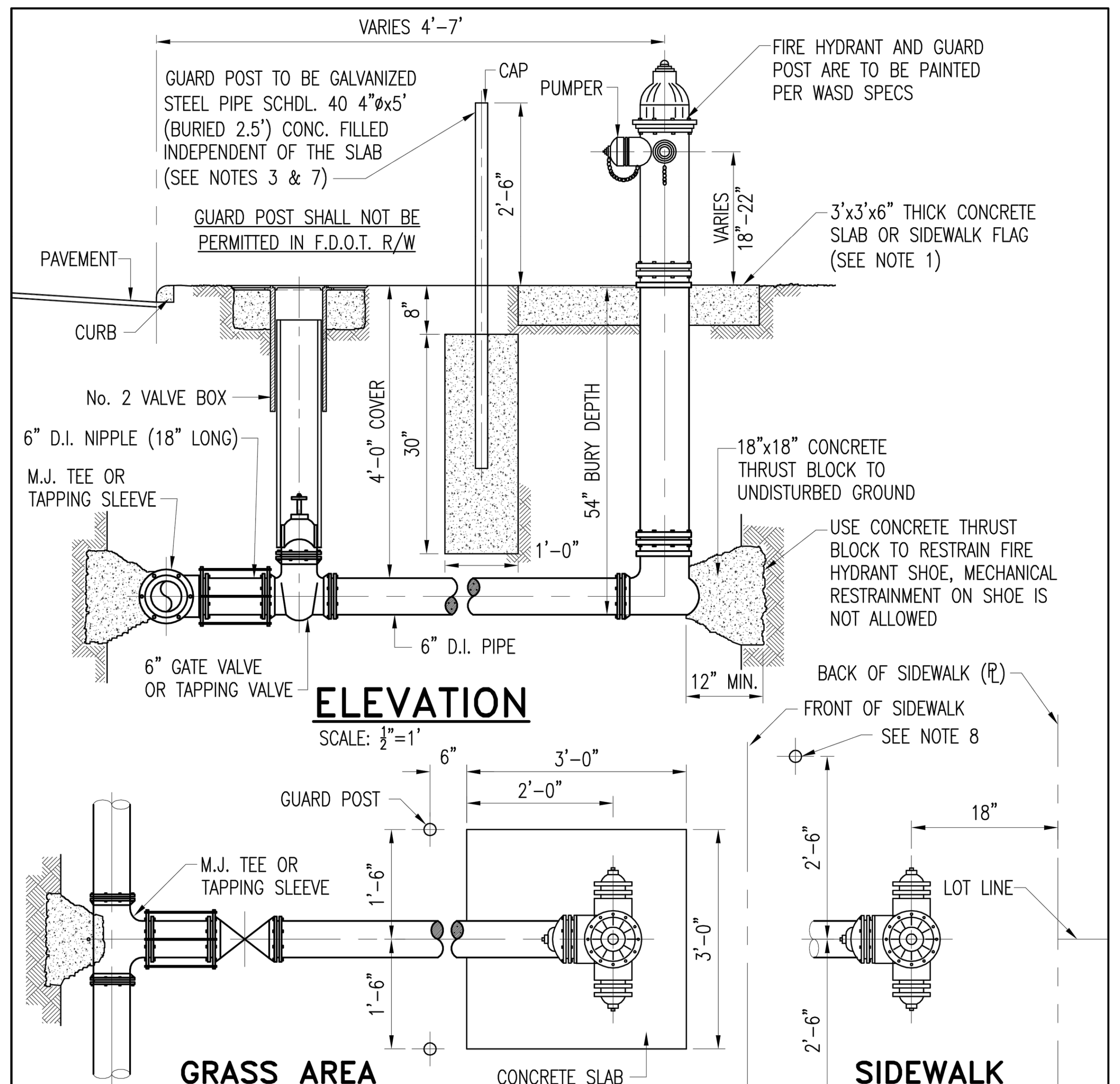

NOTES:
1. WHEN THE PORTION OF THE SIDEWALK IS WITHIN THE 4'-7' OFFSET, LOCATE FIRE HYDRANT 1' FROM FACE OF WALK, WITHIN GRASS AREA.
2. IN ALL OTHER CASES, CONTACT FIRE DEPARTMENT FOR FIRE HYDRANT LOCATION.
3. IN SIDEWALK LOCATE GUARD POSTS AT THE FACE OF THE PUMPER AND 2'-6' LEFT/RIGHT OF ℄ OF THE FIRE HYDRANT.
4. FIRE HYDRANT SLAB AND GUARD POST CONCRETE WORK SHALL BE DIFFERENT POURS.
5. EXTRA POSTS MAY BE REQUIRED IN INDUSTRIAL AND CONGESTED TRAFFIC AREAS.
6. FIRE HYDRANTS SHALL NOT BE LOCATED WITHIN A RADIUS.
7. GUARD POSTS SHALL NOT BE ALLOWED IN F.D.O.T. R/W (SEE SHEET 2 OF 2)
8. POSTS TO BE INSTALLED AT DISCRETION OF INSPECTOR.

ITEM	CROSS REF.	SPEC. REF.
CONC. ANCHOR	GS 1.1	
No. 2 VALVE BOX	WS 3.10	
TYP. TIE ROD DETAIL	GS 1.0	
TYP. GATE VALVE	WS 1.0	

ISSUE DATE	APPROVED BY	STANDARD DETAIL	
02/25/2013	F.A.	TYPICAL FIRE HYDRANT INSTALLATION WITH GUARD POSTS	WS 4.50 SHEET 1 OF 2

MIAMI-DADE COUNTY Delivering Excellence Every Day WATER & SEWER DEPARTMENT

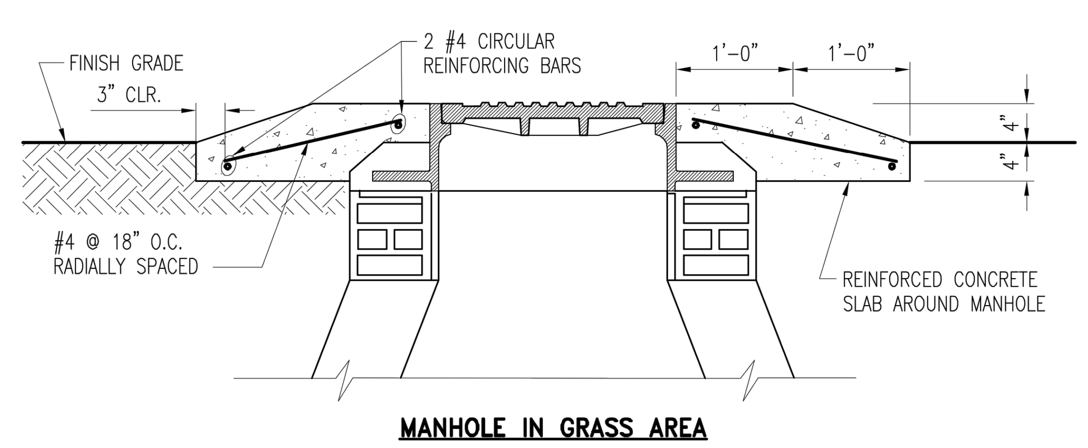

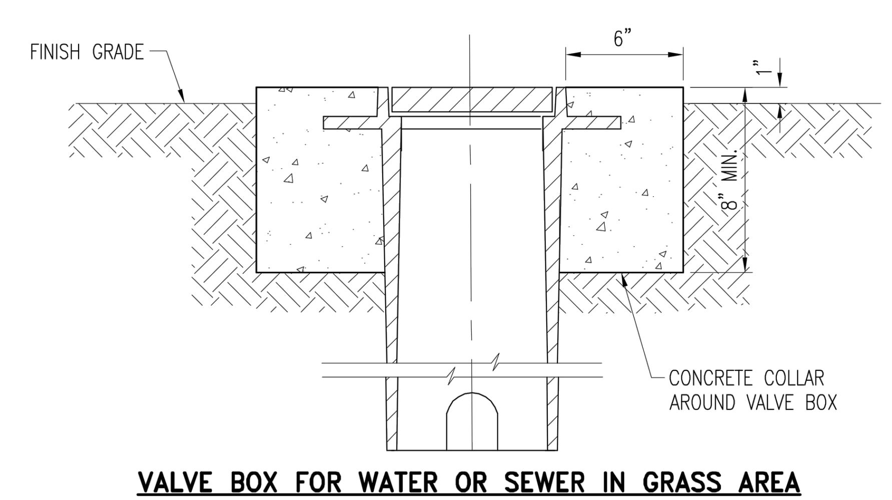

NOTES:
1. A "GRASS AREA" IS ANY AREA OTHER THAN PAVED SURFACE OR A SIDEWALK AREA.
2. IN "GRASS AREAS" THE TOP OF THE CONCRETE COLLAR OR SLAB SHALL BE FINISHED WITH THE TOP OF THE VALVE BOX OR MANHOLE.
3. AREAS SUPPORTING CONCRETE COLLAR OR SLAB SHALL BE PROPERLY COMPACTED.
4. CLEARANCE OF 30 INCHES FREE FROM OBSTRUCTIONS IN ALL DIRECTIONS.

ITEM	CROSS REF.	SPEC. REF.
STANDARD MANHOLE	SS 6.0	
VALVE BOX AND LID	WS 3.10	

ISSUE DATE	APROVED BY	STANDARD DETAIL	
06/01/2008	V.F.C.	MANHOLE / VALVE BOX IN GRASS AREAS	SS 21.0 SHEET 1 OF 1

MIAMI-DADE COUNTY Delivering Excellence Every Day WATER & SEWER DEPARTMENT

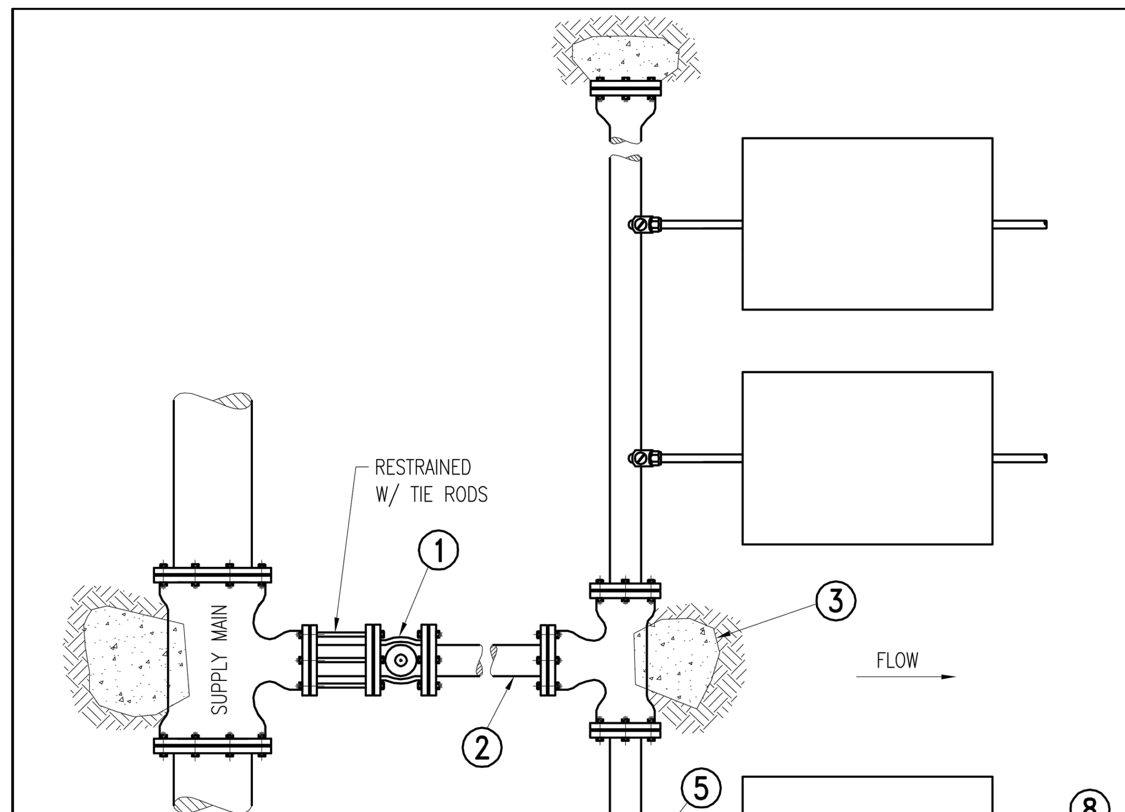

LEGEND:
1. G.V. (N.R.S.) & VALVE BOX-4"
2. HEADER SUPPLY - 4" OR LARGER
3. TEE & THRUST BLOCK
4. HEADER - 4" OR LARGER
5. CORPORATION STOP (NOTES 1 & 2 ON WS 4.13 APPLIES)
6. SERVICE PIPE - 1" COPPER OR HDPE OR 2" HDPE
7. METER BOX - SINGLE SERVICE
8. METER BOX - DUAL SERVICE
9. M.J. PLUG WITH THRUST BLOCK

NOTES:
1. METERS WILL NOT BE INSTALLED IF THE METER BOXES ARE IN A DRIVING SURFACE.
2. MAXIMUM OF 5-2" METERS FED FROM A 4" HEADER.

ITEM	CROSS REF.	SPEC. REF.
DUAL METER BOX	WS 2.12	
SINGLE METER BOX	WS 2.10	
TYP. GATE VALVE	WS 1.0	
CONC. ANCHORS	GS 1.1	

ISSUE DATE	APPROVED BY	STANDARD DETAIL	
06/01/2008	V.F.C.	METER BANK - 4" SUPPLY	WS 4.16 SHEET 2 OF 2

MIAMI-DADE COUNTY Delivering Excellence Every Day WATER & SEWER DEPARTMENT

Method "A"

Cut the polyethylene tube 2 ft. longer than the length of pipe section. Slip the tube around the pipe so as to allow 1 ft. overlap at each end. Overlap the other pipe section after pipe is installed.

Method "B"

Cut the polyethylene tube 1 ft. shorter than the length of pipe sections. Slip the tube around the pipe so as to allow 6 in. of bare pipe at each end. Before making a joint, slip a 3 ft. Length of polyethylene tube over the preceding pipe section. Overlap by at least 1 ft. and secure, after joint is made.

Method "C"

Wrap odd shaped fitting with sheet or split length of polyethylene tube by passing the sheet under the fitting and bringing it up around the body. Make seams by bringing it folding over twice, and tapping down. Tape sheet securely in place at valve stem and other penetrations.

NOTES:

1. The Department reserves the right to require polyethylene encasement wherever, in their opinion, corrosive soils exist.
2. Tube size will be as listed in table.
3. Pipe-shape fittings (bends, reducers, etc.) shall be treated according to Methods "A" and "B". Odd shaped fittings (valves, tees, etc.) shall be treated according to Method "C".
4. 6" adhesive tape shall be used to secure encasement.
5. Special care shall be taken to prevent damage to wrapping when placing backfill.
6. Refer to ASTM D1248 for approved material and accsessories.
7. Only virgin polyethylene material having a minimum thickness of 8 mils is approved.

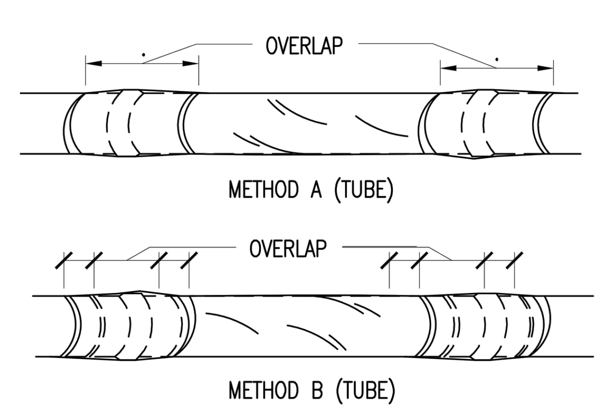

TABLE

NOMINAL PIPE DIAMETER (IN)	POLYETHYLENE FLAT TUBE WIDTH (IN)
4	16
6	20
8	24
12	30
16	37
20	45
24	54
30	67
36	81
42	95
48	108
54	121

ITEM	CROSS REF.	SPEC. REF.

ISSUE DATE	APPROVED BY	STANDARD DETAIL	
10/29/2010	V.E.F.	POLYETHYLENE ENCASEMENT FOR DUCTILE IRON PIPE	A 9.0 SHEET 1 OF 1

MIAMI-DADE COUNTY Delivering Excellence Every Day

THE OFFICIAL RECORD OF THIS SHEET IS THE ELECTRONIC FILE DIGITALLY SIGNED AND SEALED UNDER RULE 61G15-23.004, F.A.C.

File Name: I:\MIA\PRJ\000019356\700_CADD\Details.dwg - (Plotted by: Sharifuzzaman, Mohammed on Friday, February 10, 2023 10:07:12 AM)

H. W. LOCHNER, INC.
CONSULTING ENGINEERS AND PLANNERS
8750 NW 36th STREET - SUITE 360
MIAMI, FLORIDA - 33178

MIAMI GARDENS WATER MAIN IMPROVEMENTS
CITY OF OPA-LOCKA

GENERAL DETAILS

NO	DATE	REVISION	BY	NO	DATE	REVISION	BY
-	-	.	-				-

MOHAMMED SHARIFUZZAMAN, P.E.
STATE OF FLORIDA PROFESSIONAL ENGINEER
LICENSE NO. 67640

DATE: APR 22, 2022

SCALE: AS SHOWN
PROJECT No: 19356
SHEET: C17

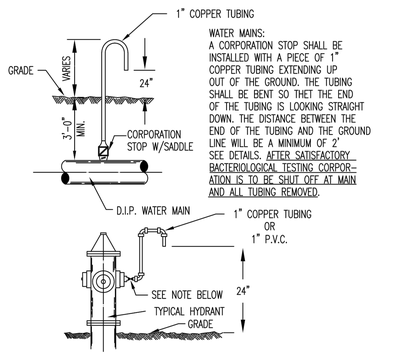

WATER MAINS:
A CORPORATION STOP SHALL BE INSTALLED WITH A PIECE OF 1" COPPER TUBING EXTENDING UP OUT OF THE GROUND. THE TUBING SHALL BE BENT SO THET THE END OF THE TUBING IS LOOKING STRAIGHT DOWN. THE DISTANCE BETWEEN THE END OF THE TUBING AND THE GROUND LINE WILL BE A MINIMUM OF 2'
SEE DETAILS. AFTER SATISFACTORY BACTERIOLOGICAL TESTING CORPORATION IS TO BE SHUT OFF AT MAIN AND ALL TUBING REMOVED.

NOTE:
1. SAMPLE POINTS COMING FROM HYDRANTS TO INCLUDE A SMALL VALVE WITH A REMOVABLE HANDLE.
2. LABEL AND NUMBER ALL SAMPLE POINTS PER PLAN SHEETS.

SAMPLING POINT DETAILS

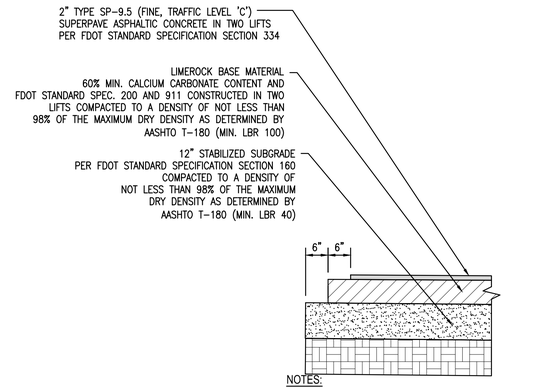

NOTES:
1. TACK AND PRIME COATS ARE REQUIRED AND SHALL BE IN ACCORDANCE WITH FDOT STANDARD SPECIFICATION SECTION 300.
2. ASPHALT INSTALLATION SHALL BE PERFORMED IN ACCORDANCE WITH FDOT STANDARD SPECIFICATION SECTION 334.
3. LIMEROCK BASE SHALL BE 12" THICK FOR CITY ROADS AND 8" THICK FOR MIAMI-DADE COUNTY ROADS.

ASPHALT PAVEMENT DETAIL
SCALE: N.T.S.

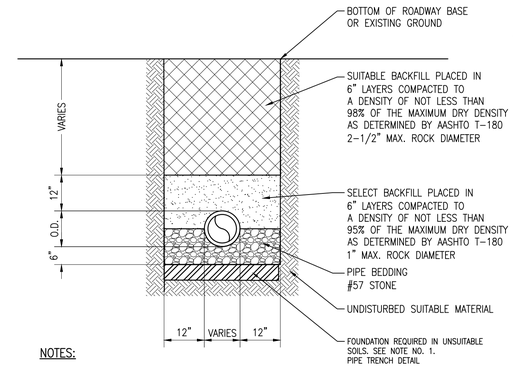

NOTES:
1. WHERE UNSUITABLE SOILS ARE ENCOUNTERED, INCLUDING PEAT, MUCK OR OTHER ORGANIC SOILS, ELASTIC SILT AND CLAYS BELOW THE WATER TABLE, A FOUNDATION IS REQUIRED, COMPACTED TO AT LEAST 90% OF MAX. DENSITY, 6" LIFTS, PER AASHTO T-180. FOUNDATION MATERIAL SHALL BE SELECT BACKFILL MATERIAL, 2" MAXIMUM SIZE 6" LIFTS. EXTEND EXCAVATION AT LEAST 2' DEEPER FOR FOUNDATION UNLESS SUITABLE MATERIAL IS FOUND AT A LESSER DEPTH, GREATER DEPTHS MAY BE REQUIRED FOR EXTREMELY POOR CONDITIONS.
2. WHERE REQUIRED, SHEETING AND SHORING SHALL BE PROVIDED BY THE CONTRACTOR.

TYPICAL PIPE TRENCH DETAIL
SCALE: N.T.S.

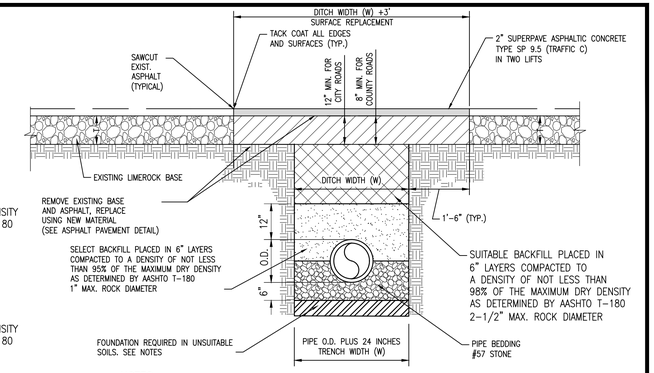

NOTES:
1. REFER TO TYPICAL SECTION, GENERAL NOTES AND SPECIFICATIONS FOR INSTALLATION AND MATERIAL REQUIREMENTS.
2. ALL EDGES OF THE EXISTING ASPHALT PAVEMENT WHERE RESURFACING WILL ABUT, SHALL BE SAWCUT IN STRAIGHT LINES PARALLEL TO OR PERPENDICULAR TO ROADWAY, PRIOR TO RESURFACING.
3. IF THE DITCH IS FILLED TEMPORARILY, IT SHALL COVERED WITH A 2" THICK SP 9.5 ASPHALTIC CONCRETE PATCH TO KEEP THE FILL MATERIAL FROM RAVELING, UNTIL REPLACED WITH A PERMANENT PAVEMENT PATCH.
4. WHERE UNSUITABLE SOILS ARE ENCOUNTERED, INCLUDING PEAT, MUCK OR OTHER ORGANIC SOILS, ELASTIC SILT AND CLAYS BELOW THE WATER TABLE, A FOUNDATION IS REQUIRED, COMPACTED TO AT LEAST 90% OF MAX. DENSITY, 6" LIFTS, PER AASHTO T-180. FOUNDATION MATERIAL SHALL BE SELECT BACKFILL MATERIAL, 2" MAXIMUM SIZE 6" LIFTS. EXTEND EXCAVATION AT LEAST 2' DEEPER FOR FOUNDATION UNLESS SUITABLE MATERIAL IS FOUND AT A LESSER DEPTH, GREATER DEPTHS MAY BE REQUIRED FOR EXTREMELY POOR CONDITIONS.
5. WHERE REQUIRED, SHEETING AND SHORING SHALL BE PROVIDED BY THE CONTRACTOR.

TRENCH WITH PAVEMENT RESTORATION
SCALE: N.T.S.

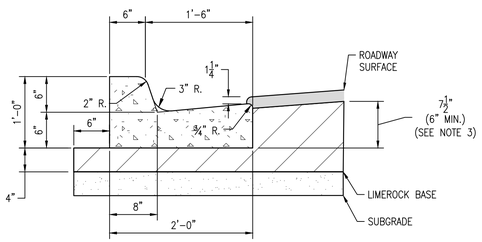

TYPE 'F' CURB & GUTTER

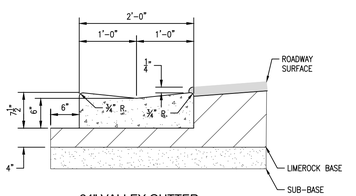

24" VALLEY GUTTER

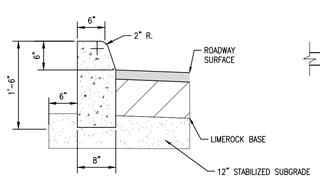

TYPE 'D' CURB

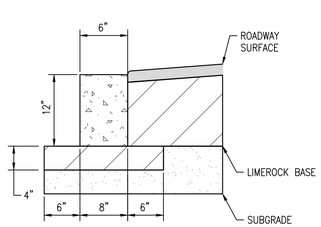

6"x12" HEADER CURB

NOTES:
1. ALL CURBS, GUTTERS AND CURB AND GUTTER SHALL BE CONSTRUCTED IN ACCORDANCE WITH FDOT DESIGN STANDARD INDEX 300 AND SPECIFICATION 520.
2. CONCRETE SHALL BE IN ACCORDANCE WITH FDOT SPECIFICATION 346 HAVING A MINIMUM 28-DAY COMPRESSIVE STRENGTH OF 3000 PSI.
3. WHEN USED ON HIGH SIDE OF ROADWAYS, CROSS SLOPE OF THE GUTTER SHALL MATCH THE CROSS SLOPE OF THE ADJACENT PAVEMENT. THE EDGE OF PAVEMENT SHALL MATCH THE LIP OF CURB ELEVATION. THE MINIMUM THICKNESS OF THE LIP SHALL BE 6".
4. BACKFILL BEHIND CURBS TO 2" BELOW TOP OF CURB TO ALLOW FOR SOD OR AS SPECIFIED IN PLANS AND SPECIFICATIONS.
5. SAWCUTS AT 10' CENTERS SHALL BE MADE WITHIN 24 HOURS OF CONCRETE PLACEMENT

CONCRETE CURB DETAILS
SCALE: N.T.S.

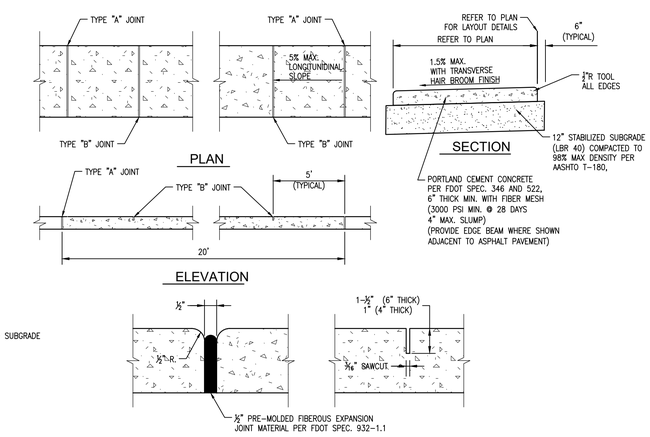

SIDEWALK JOINTS

SIDEWALK JOINTS	
TYPE	LOCATION
"A"	30'-0" CENTER TO CENTER P.C. AND P.T. OF CURVES. JUNCTION OF EXISTING AND NEW SIDEWALKS. WHERE SIDEWALK ABUTS CONCRETE CURBS, DRIVEWAYS, AND SIMILAR STRUCTURES OR AT THE DISCRETION OF THE ENGINEER.
"B"	5'-0" CENTER TO CENTER ON SIDEWALKS THROUGHOUT THE SITE.

CONCRETE SIDEWALK (6" THICK)
SCALE:N.T.S.

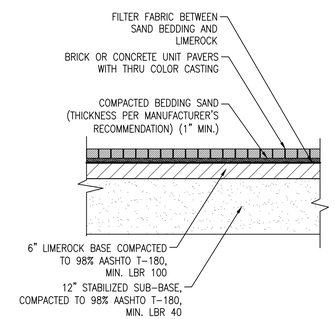

NOTES:
A. MANUFACTURE, COLOR, AND PATTERN TO MATCH EXISTING PAVERS. SUBMIT SHOP DRAWINGS FOR APPROVAL. REUSE EXISTING PAVERS. REPLACE DAMAGED PAVERS WITH NEW PAVERS.
B. OTHER NECESSARY ELEMENTS OF THIS TYPE OF PAVING, SUCH AS EDGE RESTRAINT SHALL CONSIST OF 6"X12" CONCRETE HEADER CURB.
C. SUBMIT FULL SIZE SAMPLES TO THE ENGINEER FOR APPROVAL PRIOR TO BEGINNING PLACEMENT. PROVIDE THE ENGINEER WITH A CERTIFICATION THAT THE BRICK PAVERS MEET THE REQUIREMENTS OF THIS SPECIFICATION. SUBMIT A CERTIFIED SIEVE ANALYSIS FOR GRADATION COMPARING RESULTS OF THE BEDDING AND JOINT SAND WITH THE REQUIREMENTS OF ASTM C 33 AND ASTM C 144.
D. PRIOR TO BEGINNING PLACEMENT, INSTALL A 6 BY 6 FOOT PAVER AREA FOLLOWING THESE SPECIFICATIONS, INCLUDING EDGE RESTRAINTS. THIS AREA WILL BE INCORPORATED INTO THE WORK, AND WILL BE THE STANDARD FROM WHICH THE WORK WILL BE EVALUATED.
E. CONCRETE UNIT PAVER INSTALLATION ON ROADWAYS/COMMERCIAL DRIVEWAYS SHALL MEET THE REQUIREMENTS OF ASTM C 936, AND HAVE A MINIMUM THICKNESS OF 3 1/8 INCH.
F. BRICK PAVER INSTALLATION ON RESIDENTIAL DRIVEWAYS MUST MEET THE REQUIREMENTS OF ASTM C 902, TYPE I, CLASS MX, APPLICATION PS AND HAVE A MINIMUM THICKNESS OF 2 1/8 INCH.
G. BEDDING AND JOINT SAND SHALL BE CLEAN, NON-PLASTIC BEDDING SAND, FREE FROM DELETERIOUS OR FOREIGN MATTER, NATURAL OR MANUFACTURED FROM CRUSHED ROCK.
H. BEDDING AND JOINT SAND MUST MEET THE GRADING REQUIREMENTS OF ASTM C 33 STANDARD SPECIFICATION FOR CONCRETE AGGREGATE.
I. JOINTS BETWEEN THE PAVERS SHALL BE A MINIMUM OF 1/16 INCH TO A MAXIMUM OF 1/8 INCH WIDE.

BRICK OR CONCRETE PAVERS
SCALE: N.T.S.

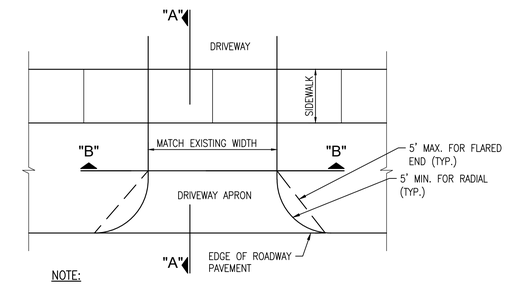

NOTE:
1. GRADING AND PREPARATION OF SUBGRADE SHALL BE APPROVED BY THE ENGINEER PRIOR TO APPLICATION OF PAVING MATERIALS.

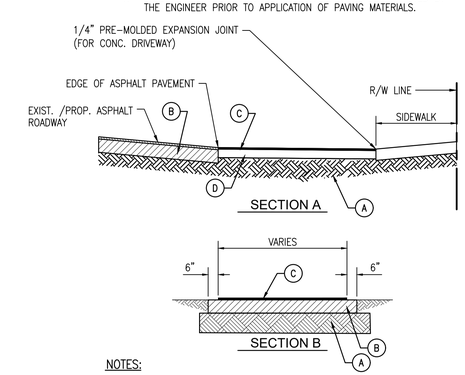

NOTES:
Ⓐ 12" STABILIZED SUBGRADE (LBR 40) COMPACTED TO 98% MAX DENSITY PER AASHTO T-180
Ⓑ 6" LIMEROCK BASE (LBR 100) COMPACTED TO 98% MAXIMUM DENSITY PER AASHTO T-180
Ⓒ 1.5" SUPERPAVE ASPHALTIC CONCRETE, FDOT TYPE SP 12.5 (TRAFFIC LEVEL C) (RESIDENTAIL DRIVEWAY)
2" SUPERPAVE ASPHALTIC CONCRETE, FDOT TYPE SP 9.5 (TRAFFIC LEVEL C) (COMMERCIAL/INDUSTRIAL)

Ⓓ 6" MIN. LIMEROCK BASE COURSE FOR ASPHALT DRIVEWAYS OR.
OR
6" MIN. 3,000 PSI CONCRETE (REINFORCED WITH FIBERMESH WHEN REQUESTED BY THE CITY).

ASPHALT/CONCRETE DRIVEWAY RESTORATION DETAIL
SCALE: N.T.S.

THE OFFICIAL RECORD OF THIS SHEET IS THE ELECTRONIC FILE DIGITALLY SIGNED AND SEALED UNDER RULE 61G15-23.004, F.A.C.

File Name: I:\MIA\PRJ\000019356\700_CADD\Details.dwg - (Plotted by: Sharifuzzaman, Mohammed on Friday, February 10, 2023 10:32:35 AM)

H. W. LOCHNER, INC.
CONSULTING ENGINEERS AND PLANNERS
8750 NW 36th STREET - SUITE 360
MIAMI, FLORIDA - 33178

MIAMI GARDENS WATER MAIN IMPROVEMENTS
CITY OF OPA-LOCKA

GENERAL DETAILS

NO	DATE	REVISION	BY	NO	DATE	REVISION	BY
–	–	.	–				

MOHAMMED SHARIFUZZAMAN, P.E.
STATE OF FLORIDA PROFESSIONAL ENGINEER
LICENSE NO. 67640

DATE: APR 22, 2022

SCALE: AS SHOWN
PROJECT No 19356
SHEET C18

File Name: I:\MIA\PRJ\000019356\700_CADD\Details.dwg – (Plotted by: Sharifuzzaman, Mohammed on Friday, February 10, 2023 10:07:49 AM)

I. GENERAL NOTES FOR CONSTRUCTION:

1. ALL CONSTRUCTION AND MATERIALS SHALL CONFORM TO MUNICIPALITY STANDARDS AND SPECIFICATIONS INCLUDING MIAMI-DADE WATER AND SEWER DEPARTMENT (MDWASD), MIAMI-DADE COUNTY PUBLIC WORKS DEPARTMENT, MIAMI-DADE COUNTY FIRE DEPARTMENT, AND ALL OTHER LOCAL, STATE AND NATIONAL CODES WHERE APPLICABLE.
2. THE CONTRACTOR SHALL MAKE EVERY REASONABLE EFFORT TO PERFORM THE WORK AND MAINTAIN SAFETY TO THE PUBLIC AND THE PROTECTION OF PROPERTY THROUGHOUT CONSTRUCTION. ALL WORK SHALL BE PERFORMED IN ACCORDANCE WITH OSHA STANDARDS AS APPLICABLE.
3. ALL CONSTRUCTION SHALL BE DONE IN A SAFE MANNER AND IN STRICT COMPLIANCE WITH ALL REQUIREMENTS OF THE FEDERAL OCCUPATIONAL SAFETY AND HEALTH ACT OF 1970, THE FLORIDA TRENCH SAFETY ACT OF FLORIDA (90-96) EFFECTIVE OCTOBER 1, 1990, AND ALL OTHER STATE AND LOCAL SAFETY AND HEALTH REGULATIONS.
4. THE CONTRACTOR SHALL COMPLY WITH THE WATER QUALITY STANDARDS OF THE STATE OF FLORIDA. ADEQUATE SILT CONTAINMENT PROCEDURES AND/OR EQUIPMENT SHALL BE USED TO CONTROL TURBIDITY AT ALL TIMES. THERE SHALL BE NO DIRECT DISCHARGE OF WATER TO ANY OFFSITE DITCH, WATER BODY OR PRESERVATION AREA.
5. ALL CONNECTIONS TO EXISTING MAINS SHALL BE OBSERVED BY CITY OF OPA-LOCKA PUBLIC WORKS DEPARTMENT, MIAMI-DADE WATER AND SEWER DEPARTMENT (MDWASD). VALVES OF EXISTING MAINS SHALL BE OPERATED BY CITY OF OPA-LOCKA PUBLIC WORKS OR MDWASD PERSONNEL, OR UNDER THEIR DIRECT SUPERVISION. LOCAL CHLORINATION WILL BE REQUIRED FOR ALL PIPE AND FITTINGS USED TO COMPLETE CONNECTIONS WITH POTABLE WATER.
6. THE CONTRACTOR SHALL HAVE AVAILABLE AT THE JOB SITE AT ALL TIMES ONE COPY OF MIAMI-DADE WATER AND SEWER DEPARTMENT (MDWASD) SPECIFICATIONS AND DETAILS, ONE COPY OF THE CONTRACT DOCUMENTS, INCLUDING PLANS, SPECIFICATIONS AND SPECIAL PROVISIONS, AND COPIES OF ANY REQUIRED CONSTRUCTIONS PERMITS.
7. THE CONTRACTOR SHALL OBSERVE THE SPECIAL, LIMITING, GENERAL AND SPECIFIC CONDITIONS OF ALL PERMITS APPLICABLE TO THIS WORK.
8. THE CONTRACTOR SHALL MAINTAIN ALL WATER SUPPLY AND SANITARY SEWER SERVICES THROUGHOUT CONSTRUCTION OF THIS PROJECT.
9. IT IS THE CONTRACTOR RESPONSIBILITY TO ENSURE HIS/HER COMPLETE FAMILIARITY WITH THE PROJECT SITE AND COMPONENTS TO INCLUDE SUBSURFACE CONDITIONS OF SOIL AND GROUNDWATER TABLE BY SUBMITTAL OF A BID FOR THIS PROJECT. THE CONTRACTOR ACKNOWLEDGES HIS/HER COMPLETE UNDERSTANDING AND RESPONSIBILITIES WITH RESPECT TO THE CONSTRUCTION ACTIVITIES REQUIRED UNDER THE SCOPE OF THIS PROJECT.
10. THE CONTRACTOR TO ADHERE TO ANY SPECIAL SHORING REQUIREMENTS OF THE STATE OR OTHER POLITICAL SUBDIVISION. THE ENGINEER OF RECORD IS NOT RESPONSIBLE FOR THE SAFETY OF EXCAVATION OR DESIGN AND CONSTRUCTION OF ANY SHORING.
11. ALL DISPOSAL OF EXCESS AND UNSUITABLE MATERIAL, CONTAMINATED SOILS OR MATERIALS, DEMOLITION, VEGETATION, RUBBISH AND DEBRIS SHALL BE MADE OUTSIDE THE LIMITS OF CONSTRUCTION AT A LEGAL DISPOSAL SITE PROVIDED BY THE CONTRACTOR AT HIS/HER OWN EXPENSE, WITH THE PRIOR APPROVAL OF THE ENGINEER. MATERIAL CLEARED FROM THE SITE SHALL NOT BE DEPOSITED ON ADJACENT AND/OR NEARBY PROPERTY.
12. THE CONTRACTOR SHALL CONTACT ALL CONCERNED UTILITIES AT LEAST 48 HOURS IN ADVANCE OF CONSTRUCTION OPERATIONS.
13. LOCATION OF PROPOSED FACILITIES WILL BE STAKED BY THE CONTRACTOR.
14. ALL UTILITIES DAMAGED BY CONSTRUCTION MUST BE PROMPTLY REPAIRED TO THE CONDITION EXISTING PRIOR TO THE DAMAGING OF THE UTILITY. REPAIRS ARE INCIDENTAL TO CONSTRUCTION AND SHALL BE REPAIRED AT NO COST TO THE OWNER.
15. ALL EXISTING MANHOLES, ELECTRIC BOXES, AND VALVE BOXES SHALL BE ADJUSTED TO THE PROPOSED GRADE UNLESS OTHERWISE NOTED.
16. PAVEMENT DISTURBED BY UTILITY INSTALLATION SHALL BE RESTORED PER THE DETAILS AND SPECIFICATIONS.
17. PROPERTY DAMAGE RESULTING FROM WORK REQUIRED BY THIS CONTRACT SHALL BE CLEANED UP, REPAIRED OR REPLACED AT NO COST TO THE OWNER.
18. CONTRACTOR SHALL PROVIDE ALL MAINS, ALL FITTINGS, ATTACHMENTS, AND EQUIPMENT REQUIRED TO PERFORM TESTING PER MIAMI-DADE WATER AND SEWER DEPARTMENT (MDWASD) STANDARDS, SPECIFICATIONS, AND REQUIREMENTS AS APPLICABLE.
19. THE CONTRACTOR SHALL OBTAIN AND PAY FOR ALL PERMITS, OFFICIAL INSPECTIONS AND ALL OTHER OFFICIAL FEES, IN CONNECTION WITH THE WORK.
20. INSPECTION BY MIAMI-DADE WATER AND SEWER DEPARTMENT (MDWASD), CITY OF OPA-LOCKA PUBLIC WORKS/BUILDING DEPARTMENT ARE REQUIRED IN ADDITION TO, NOT IN LIEW OF, OTHER COUNTY DEPARTMENT INSPECTIONS (IF ANY).
21. NO INSTALLATION WILL BE ACCEPTED UNTIL IT HAS PASSED ALL INSPECTIONS, INCLUDING PAVEMENT INSTALLATION OR REPLACEMENT.
22. CONTRACTOR TO SUBMIT SHOP DRAWINGS ACCORDING TO THE MIAMI-DADE WATER AND SEWER DEPARTMENT (MDWASD) STANDARD SPECIFICATIONS AND MDWASD APPROVED PRODUCTS LIST. SHOP DRAWINGS MUST BE APPROVED BY THE ENGINEER, CITY OF OPA-LOCKA, AND THE MIAMI-DADE WATER AND SEWER DEPARTMENT (MDWASD) AS APPLICABLE. THE CONTRACTOR SHALL UTILIZE MDWASD PRE-APPROVED PRODUCT LIST FOR SHOP DRAWINGS SUBMITTAL AND CONSTRUCTION.
23. CONTRACTOR SHALL PROVIDE AS-BUILT/RECORD DRAWINGS ACCORDING TO THE MIAMI-DADE WATER AND SEWER DEPARTMENT (MDWASD) DETAIL (GS 0.5).
24. ALL CONSTRUCTION DEWATERING WILL REQUIRE A DEWATERING PERMIT FROM MIAMI-DADE COUNTY DEPARTMENT OF REGULATORY AND ECONOMIC RESOURCES (DRER). THIS SHALL BE OBTAINED BY THE CONTRACTOR AT THE CONTRACTOR'S EXPENSE PRIOR TO BEGINNING OF CONSTRUCTION.
25. ANY SIDEWALK, PARKING SPACE, CURB AND GUTTER OR PAVEMENT DISTURBED OR OPEN-CUT FOR THE INSTALLATION OF PROPOSED UTILITIES SHALL BE REPLACED AND RESTORED BY THE CONTRACTOR. COST FOR RESTORATION SHALL BE INCLUDED WITH THE BID UNIT PRICE FOR PROPOSED WATER MAIN OR WATER SERVICES.
26. SOD IS TO BE PLACED FOR THE FULL WIDTH DISTURBED. COST FOR RESTORATION OF TRENCH AND SOD SHALL BE INCLUDED WITH THE BID UNIT PRICE FOR PROPOSED WATER MAIN AND WATER SERVICES.
27. ALL RUBLE AND UNSUITABLE MATERIAL MUST BE REMOVED FROM THE PROJECT SITE AND DISPOSED OF PROPERLY BY THE CONTRACTOR AT CONTRACTOR'S EXPENSE.
28. CONTRACTOR SHALL PROVIDE PROPER BENDS TO MAINTAIN REQUIRED DEPTH, ALIGNMENT OF PIPE, OR TO AVOID CONFLICTS. COST OF BENDS (DESIGNATED OR NOT DESIGNATED ON PLANS) SHALL BE INCLUDED WITH THE BID UNIT PRICE FOR PIPE.
29. DEFLECT PIPE AS NECESSARY TO OBTAIN THE REQUIRED ALIGNMENT. USE APPROPRIATE FITTINGS WHEN DEFLECTION EXCEEDS 75% OF MANUFACTURER'S RECOMMENDED MAXIMUM DEFLECTION.
30. ALL JOINTS BETWEEN BENDS AT ALL HORIZONTAL AND VERTICAL OFFSETS SHALL BE RESTRAINED.
31. THE CONTRACTOR IS RESPONSIBLE FOR THE PROTECTION AND RESTORATION OF ALL EXISTING STRUCTURES WITHIN THE CONSTRUCTION LIMITS OF THE PROJECT, INCLUDING BUT NOT LIMITED TO WALLS, BENCHES, FENCES, POWER POLE, MAIL BOXES, DRAINAGE PIPES AND STRUCTUTRES, UTILITY CONDUITS, SIGNS, SIGN POSTS, ETC.
32. CONTRACTOR SHALL CONSTRUCT THE PROPOSED WATER MAIN AND WATER SERVICES ACCORDING TO THE APPROVED PLANS, DETAILS, AND MDWASD SPECIFICATIONS AS MODIFIED BY THE CONTRACT DOCUMENTS.
33. WATER METERS AND METER BOXES SHALL NOT BE LOCATED OR INSTALLED IN DRIVEWAY SURFACE.
34. CONTRACTOR SHALL RESTORE ALL ENCROACHED/DAMAGED DRIVEWAY TO EQUAL OR BETTER CONDITION. CONCRETE DRIVEWAYS AND/OR PAVERS WILL REQUIRE REMOVAL AND REPLACEMENT OF ENTIRE DRIVEWAY APPROACH.

II. PRECONSTRUCTION RESPONSIBILITIES:

A. THE CONTRACTOR SHALL OBTAIN AN SUNSHINE CERTIFICATION NUMBER AT LEAST 48 HOURS PRIOR TO BEGINNING ANY EXCAVATION (WHERE REQUIRED), AND CONTACT THE MUNICIPALITY PUBLIC WORKS DEPARTMENT IN ADVANCE OF WORK.

B. PRIOR TO COMMENCEMENT OF CONSTRUCTION THE CONTRACTOR SHALL ATTEND A PRE-CONSTRUCTION CONFERENCE WHICH WILL BE HELD WITH CITY OF OPA-LOCKA PUBLIC WORKS/BUILDING DEPARTMENT, MIAMI-DADE WATER AND SEWER DEPARTMENT (MDWASD), VARIOUS UTILITY COMPANIES, AND OTHER INTERESTED PARTIES FOR THE PURPOSE OF COORDINATION THE WORK. ALL PARTIES TO THIS CONFERENCE SHOULD BE PREPARED TO DISCUSS ANY PROBLEMS ANTICIPATED WITH EXECUTION OF THIS WORK. THE CONTRACTOR TO COORDINATE WITH THE CITY, MDWASD AND ALL OTHER PARTIES TO SET THE TIME AND PLACE OF THE PRE-CONSTRUCTION CONFERENCE. THE PRECONSTRUCTION CONFERENCE TO INCLUDE ALL INVOLVED GOVERNMENTAL AGENCIES, UTILITY OWNERS, THE OWNER, AND THE ENGINEER.

C. THE CONTRACTOR SHALL PREPARE A COMPLETE VIDEO RECORD OF THE PROJECT SITE BEFORE BEGINNING ANY WORK. THE VIDEO RECORD SHALL INCLUDE ALL ROADWAY, DRAINAGE AND UTILITIES POINTS OF CONNECTION AND SHALL EXTEND A MINIMUM OF 100 FEET BEYOND THE WORK LIMITS TO DOCUMENT THE EXISTING CONDITIONS. THE CONTRACTOR SHALL ALSO VIDEO DOCUMENT ALL HAUL ROUTES NEEDED FOR THE OFFSITE MOVEMENT OF EARTHWORK. COPIES OF THE VIDEO RECORD SHALL BE PROVIDED TO THE ENGINEER OF RECORD AND THE OWNER PRIOR TO SUBMITTAL OF THE FIRST PAY REQUEST. ALL COST FOR VIDEO RECORD SHALL BE INCLUDED IN THE BID PRICE FOR MOBILIZATION.

D. IT IS THE OWNER'S AND/OR CONTRACTOR'S RESPONSIBILITY TO OBTAIN ANY CONSTRUCTION AND MAINTENANCE EASEMENTS THAT MAY BE REQUIRED FOR THIS PROJECT.

E. THE CONTRACTOR IS REQUIRED TO COOPERATE IN ORDER TO MINIMIZE DISRUPTION OF ACTIVITIES OF OTHER CONTRACTORS.

E. THE LOCATION AND SIZE OF ALL EXISTING UTILITIES SHOWN ON THE PLANS ARE APPROXIMATE AND BASED ON THE BEST AVAILABLE INFORMATION. ADDITIONAL UTILITIES MAY EXIST WHICH ARE NOT SHOWN ON THE PLANS. THE CONTRACTOR SHALL BE RESPONSIBLE FOR THE LOCATION OF ALL EXISTING UTILITIES. THE CONTRACTOR SHALL VERIFY ALL UTILITIES BY ELECTRONIC METHODS AND BY HAND EXCAVATION IN COORDINATION WITH ALL UTILITY COMPANIES, PRIOR TO BEGINNING ANY CONSTRUCTION OPERATIONS. ANY AND ALL CONFLICTS OF EXISTING UTILITIES WITH PROPOSED IMPROVEMENTS SHALL BE RESOLVED BY THE ENGINEER AND THE OWNER PRIOR TO BEGINNING ANY CONSTRUCTION OPERATIONS. THIS WORK BY THE CONTRACTOR SHALL BE CONSIDERED INCIDENTAL TO THE CONTRACT AND NO ADDITIONAL COMPENSATION SHALL BE ALLOWED. THIS WORK BY THE CONTRACTOR SHALL BE PERFORMED PRIOR TO SHOP DRAWINGS SUBMITTAL.

F. ALL MATERIALS SUPPLIED FOR WATER AND SEWER WORK SHALL CONFORM TO THE MIAMI-DADE WATER AND SEWER DEPARTMENT APPROVED PRODUCT LIST AND SHOP DRAWINGS AS APPROVED PRIOR TO CONSTRUCTION.

III. INSPECTIONS:

A. THE CONTRACTOR SHALL OBTAIN AND PAY FOR ALL PERMITS, OFFICIAL INSPECTIONS AND ALL OTHER OFFICIAL FEES, IN CONNECTION WITH THE WORK, IN ACCORDANCE WITH SECTION 01740.

THE CONTRACTOR SHALL NOTIFY THE ENGINEER OF RECORD, AND ANY OTHER GOVERNMENTAL AGENCY HAVING JURISDICTION, TO SCHEDULE INSPECTIONS AND TESTS A MINIMUM OF 24-48 HOURS IN ADVANCE FOR THE INSPECTION OF THE FOLLOWING GENERAL ITEMS, (INCLUDED BUT NOT LIMITED TO) WHERE APPLICABLE:

1. CLEARING, EXCAVATION, AND EMBANKMENT
2. WATER DISTRIBUTION SYSTEM
3. PAVING
4. FINAL

IV. TEMPORARY FACILITIES:

A. THE CONTRACTOR SHALL BE RESPONSIBLE TO ARRANGE FOR OR SUPPLY TEMPORARY WATER SERVICE, SANITARY FACILITIES, AND ELECTRICITY.

B. TRAFFIC REGULATION:

1. MAINTENANCE OF TRAFFIC IN THE PUBLIC RIGHT-OF-WAY SHALL BE IN ACCORDANCE WITH M.U.T.C.D. AND FDOT STANDARDS
2. ALL OPEN TRENCHES AND HOLES ADJACENT TO ROADWAYS OR WALKWAYS SHALL BE PROPERLY MARKED AND BARRICADED TO ENSURE THE SAFETY OF BOTH VEHICULAR AND PEDESTRIAN TRAFFIC.
3. NO TRENCHES OR HOLES NEAR WALKWAYS, IN ROADWAYS OR THEIR SHOULDERS SHALL BE LEFT OPEN DURING NIGHTTIME HOURS WITHOUT EXPRESS PERMISSION OF THE MUNICIPALITY.

V. PROJECT CONSTRUCTION COORDINATION:

A. THE CONTRACTOR SHALL COORDINATE HIS ACTIVITIES WITH ANY OTHER CONTRACTOR PERFORMING WORK AT THE PROJECT SITE.

B. DURING CONSTRUCTION, THE PROJECT SITE AND ALL ADJACENT AREAS SHALL BE MAINTAINED IN A NEAT AND CLEAN MANNER, AND UPON FINAL CLEAN-UP, THE PROJECT SHALL BE LEFT CLEAR OF ALL SURPLUS MATERIAL OR TRASH. THE PAVED AREAS SHALL BE SWEPT BROOM CLEAN.

VI. MAINTENANCE OF TRAFFIC:

A. GENERAL:

1. THE CONTRACTOR SHALL PROVIDE A MAINTENANCE OF TRAFFIC PLAN (MOT). THE MOT PLAN SHALL CONFORM TO THE FLORIDA DEPARTMENT OF TRANSPORTATION (FDOT) STANDARD PLANS FOR ROAD CONSTRUCTION (LATEST EDITION) INDEX #102-100 THRU #102-680 (MAINTENANCE OF TRAFFIC). ALL WORK SHALL BE EXECUTED UNDER THE ESTABLISHED PLAN AND FDOT APPROVED PROCEDURES.

VII. GENERAL NOTES:

1. THE CONTRACTOR TO RESTORE, INCLUDING BUT NOT LIMITED TO, ALL ASPHALT PAVEMENT, PAVEMENT MARKINGS AND RPM, STREET SIGNS, SOD, LANDSCAPE, IRRIGATION, CURB, CURB & GUTTER, GUARD RAILS, FENCES, PAVER BRICKS, SIDEWALKS, MAIL BOXES, ANY DISTURBED UNDERGROUND OR ABOVE GROUND UTILITIES.
2. THE CONTRACTOR SHALL PROTECT ALL EXISTING ABOVE OR UNDERGROUND STRUCTURES, UTILITIES, SIDEWALKS, ASPHALT PAVEMENT NOT SHOWN ON THE PLANS TO BE REMOVED BY CONSTRUCTION. THE CONTRACTOR SHALL REPAIR OR REPLACE ANY DAMAGE CAUSED BY CONSTRUCTION ACTIVITIES. THE CONTRACTOR SHALL BE RESPONSIBLE FOR ALL COST OF SUCH REPAIR WORK.
3. THE EXISTING ASPHALT SHALL BE SAWCUT TO PROVIDE A STRAIGHT EVEN LINE.
4. THE CONTRACTOR TO ADJUST ALL EXISTING/PROPOSED VALVE BOXES, METER BOXES, PULL BOXES, MANHOLE COVERS TO MATCH PROPOSED GRADES IF NOT TO BE REMOVED.
5. THE CONTRACTOR SHALL INSTALL SOD FOR ALL DISTURBED AREAS. ALL PROPOSED ELEVATIONS REFER TO FINISHED GRADES. SITE GRADING ELEVATIONS SHALL BE AT THE REQUIRED ELEVATION AND ALL AREAS SHALL BE GRADED TO DRAIN.
6. IT SHALL BE THE CONTRACTOR'S RESPONSIBILITY TO TAKE THE NECESSARY PRECAUTIONS TO ENSURE PROPER SAFETY AND WORKMANSHIP WHEN WORKING IN THE VICINITY OF EXISTING UTILITY LINES.
7. CONTRACTOR SHALL BE RESPONSIBILITY TO COORDINATE WITH FPL ON ANY WORK IN THE VICINITY OF OVERHEAD OR UNDERGROUND POWER LINES.
8. CONTRACTOR SHALL VERIFY PROPER CLEARANCE BELOW EXISTING OVERHEAD POWER LINES PRIOR TO WORKING WITHIN THE VICINITY OF POWER LINES.

PIPE MARKINGS

ALL PIPE AND PIPE FITTINGS INSTALLED UNDER THIS PROJECT WILL BE COLOR CODED OR MARKED IN ACCORDANCE WITH SUBPARAGRAPH 62-555.320(21)(B)3, F.A.C., USING BLUE AS A PREDOMINANT COLOR. (UNDERGROUND PLASTIC PIPE WILL BE SOLID-WALL BLUE PIPE, WILL HAVE A CO-EXTRUDED BLUE EXTERNAL SKIN, OR WILL BE WHITE OR BLACK PIPE WITH BLUE STRIPES INCORPORATED INTO, OR APPLIED TO, THE PIPE WALL; AND UNDERGROUND METAL OR CONCRETE PIPE WILL HAVE BLUE STRIPES APPLIED TO THE PIPE WALL. PIPE STRIPED DURING MANUFACTURING OF THE PIPE WILL HAVE CONTINUOUS STRIPES THAT RUN PARALLEL TO THE AXIS OF THE PIPE, THAT ARE LOCATED AT NO GREATER THAN 90-DEGREE INTERVALS AROUND THE PIPE, AND THAT WILL REMAIN INTACT DURING AND AFTER INSTALLATION OF THE PIPE. IF TAPE OR PAINT IS USED TO STRIPE PIPE DURING INSTALLATION OF THE PIPE, THE TAPE OR PAINT WILL BE APPLIED IN A CONTINUOUS LINE THAT RUNS PARALLEL TO THE AXIS OF THE PIPE AND THAT IS LOCATED ALONG THE TOP OF THE PIPE; FOR PIPE WITH AN INTERNAL DIAMETER OF 24 INCHES OR GREATER, TAPE OR PAINT WILL BE APPLIED IN CONTINUOUS LINES ALONG EACH SIDE OF THE PIPE AS WELL AS ALONG THE TOP OF THE PIPE. ABOVEGROUND PIPE WILL BE PAINTED BLUE OR WILL BE COLOR CODED OR MARKED LIKE UNDERGROUND PIPE.)

GENERAL NOTES FOR WATER SYSTEM:

PRESSURE PIPE NOTES:

1. THERE SHALL BE 48" MINIMUM COVER FROM FINISHED GRADE TO TOP OF PIPE.
2. ALL FITTINGS SHALL BE DUCTILE IRON WITH MECHANICAL JOINTS AND CEMENT OR APPROVED EPOXY LINING.
3. ALL BURIED DIP SHALL BE ENCASED IN A POLYETHYLENE SLEEVE PER THE SPECIFICATIONS.
4. NEW WATER MAIN SHALL BE LOCATED AT LEAST SEVEN FEET HORIZONTALLY FROM PARALLEL SANITARY SEWER MAIN. ALL PIPES SHALL UTILIZE RESTRAINED JOINTS.
4. POTABLE WATER, RECLAIMED WATER AND WASTEWATER FORCE MAIN VALVES 10 INCHES AND SMALLER SHALL BE RESILIENT SEAT GATE VALVES. TWELVE-INCH (12") OR LARGER FORCE MAIN VALVES SHALL BE RESILIENT SEAT GATE VALVES OR ECCENTRIC PLUG VALVES (IF APPROVED IN ADVANCE BY CITY). POTABLE WATER OR RECLAIMED WATER MAIN VALVES LARGER THAN 10 INCHES SHALL BE BUTTERFLY VALVES.

WATER SYSTEM INSTALLATION:

1. NO CONNECTION TO AN EXISTING MAIN SHALL BE MADE BEFORE PRESSURE TESTS FOR THE NEW MAIN, INCLUDING BACTERIOLOGICAL SAMPLES FOR NEW WATER MAINS, HAVE BEEN ACCEPTED BY THE LOCAL GOVERNING AGENCY.
2. ALL ITEMS FOR WATER SYSTEM MUST CONFORM TO APPROVED PRODUCTS LIST AND SPECIFICATIONS PUBLISHED BY MDWASD.
3. D.I.P. SHALL BE INSTALLED IN ACCORDANCE WITH ANSI/AWWA C600-93, OR LATEST REVISION.
4. BURIED PIPES SHALL BE COLOR CODED WITH A BLUE PAINT AS STATED IN THE FLORIDA ADMINISTRATION CODE, SUBPARAGRAPH 62-555.320(21)(B)3 AND AS REQUIRED BY THE FLORIDA DEPARTMENT OF ENVIRONMENTAL PROTECTION. IF PAINT IS APPLIED DURING INSTALLATION OF THE PIPE, THE PAINT SHALL BE APPLIED IN A CONTINUOUS LINE THAT RUNS PARALLEL TO THE AXIS PIPE AND THAT IS LOCATED ON THE TOP OF THE PIPE.
5. FURNISH AND INSTALL A 10 GAUGE STRANDED COPPER BLUE TRACER WIRE TAPPED EVERY FOUR FEET WITH POLY OR DUCT TAPE ABOVE ALL HDPE SERVICES FOR LOCATION PURPOSES.
5. PRESSURE MAINS SHALL BE LAID WITH A MINIMUM 48" COVER UNLESS OTHERWISE NOTED.
6. PIPE DEFLECTION SHALL NOT EXCEED 75% OF THE MAXIMUM DEFLECTION RECOMMENDED BY THE MANUFACTURER.
7. RESTRAINED JOINTS SHALL BE CONSTRUCTED USING MECHANICAL OR COMPRESSION JOINT PIPE AND FITTINGS WITH MEGA-LUG RESTRAINING DEVICES. MECHANICAL JOINT DIP RETAINER GLANDS WILL NOT BE PERMITTED WITHOUT THE EXPRESS APPROVAL OF THE ENGINEER.
8. A CONTINUOUS AND UNIFORM BEDDING SHALL BE PROVIDED. BACKFILL MATERIAL SHALL BE TAMPED IN LAYERS AROUND THE PIPE AS SHOWN ON THE PLANS. ROCKS OR STONES LARGER THAN 1" DIAMETER FOUND IN THE TRENCH SHALL BE REMOVED FOR A DEPTH AT LEAST 6" BELOW THE BOTTOM OF THE PIPE.

WATER SYSTEM TESTING:

1. THE NEW WATER DISTRIBUTION SYSTEM MUST BE TESTED FOR COLIFORM BACTERIA AND APPROVED BY THE FLORIDA DEPARTMENT OF HEALTH IN MIAMI-DADE COUNTY BEFORE ANY PHYSICAL CONNECTION TO THE EXISTING SYSTEM.
2. BEFORE ANY PHYSICAL CONNECTIONS TO THE EXISTING WATER MAINS ARE MADE, THE COMPLETE WATER SYSTEM SHALL BE PRESSURE TESTED AND DISINFECTED.
3. WATER USED BY THE CONTRACTOR SHALL BE METERED AND PAID FOR BY THE CONTRACTOR. CONTRACTOR SHALL ALSO VERIFY TIMES OF FILLING MAINS WITH PUBLIC WORKS/UTILITY DEPARTMENT. THE PRESSURE TEST SHALL BE WITNESSED BY A REPRESENTATIVE OF THE CITY OF OPA-LOCKA AND THE ENGINEER.
4. HYDROSTATIC TESTING OF NEW MAINS SHALL BE PERFORMED AT A MINIMUM STARTING PRESSURE OF 150 PSI FOR TWO HOURS IN ACCORDANCE WITH ANSI/AWWA C600-93, OR LATEST REVISION. THE PRESSURE TEST SHALL NOT VARY MORE THAN +5 PSI DURING THE TEST.
5. THE ALLOWABLE LEAKAGE SHALL BE LESS THAN THE NUMBER OF GALLONS PER HOUR AS DETERMINED BY THE FORMULA:

$$Q\ \text{(GALLONS PER HOUR)} = \frac{\sqrt{L\ D\ (P)}^{0.5}}{148{,}000}$$

Q = QUANTITY OF MAKEUP WATER (TESTING ALLOWANCE), IN GALS/HR (NO ALLOWABLE LEAKAGE FOR VALVES)
L = LENGTH OF PIPE TESTED IN FEET
D = NOMINAL DIAMETER OF PIPE, IN INCHES
P = AVERAGE TEST PRESSURE DURING THE HYDROSTATIC TEST IN LBS/SQ.IN. (GAUGE)

6. WATER MAINS SHALL BE CLEANED AND DISINFECTED IN ACCORDANCE WITH ANSI/AWWA C651-14, OR LATEST REVISION.
7. BACTERIOLOGICAL SAMPLING POINTS SHALL BE PROVIDED AT THE LOCATIONS SHOWN ON THE PLANS. IF NOT SPECIFIED, SAMPLING POINTS SHALL BE PROVIDED AT INTERVALS OF 1500 MAXIMUM FOR LINES GREATER THAN 1500 IN LENGTH. PROVIDE A MINIMUM OF TWO SAMPLING POINTS FOR ALL OTHER TEST SEGMENTS.

PAVEMENT RESTORATION

1. THE CONTRACTOR SHALL RESTORE THE EXISTING ASPHALT PAVEMENT PER STANDARD SPECIFICATIONS AND DETAILS. THE COST FOR RESTORATION SHALL BE INCLUDED WITH THE BID UNIT PRICE FOR PIPES.
2. CONTRACTOR SHALL REPLACE EXISTING PAVEMENT MARKINGS IMMEDIATELY UPON COMPLETION OF PAVEMENT RESTORATION WITHIN THE LIMITS OF CONSTRUCTION. CONTRACTOR SHALL PLACE FINAL THERMAL PLASTIC WITHIN 30 DAYS AFTER THE PLACEMENT OF THE PAVEMENT RESTORATION. PAVEMENT MARKING SHALL BE INSTALLED IN ACCORDANCE TO THE CURRENT EDITION OF THE FLORIDA DEPARTMENT OF TRANSPORTATION STANDARD SPECIFICATION FOR ROAD AND BRIDGE CONSTRUCTION.

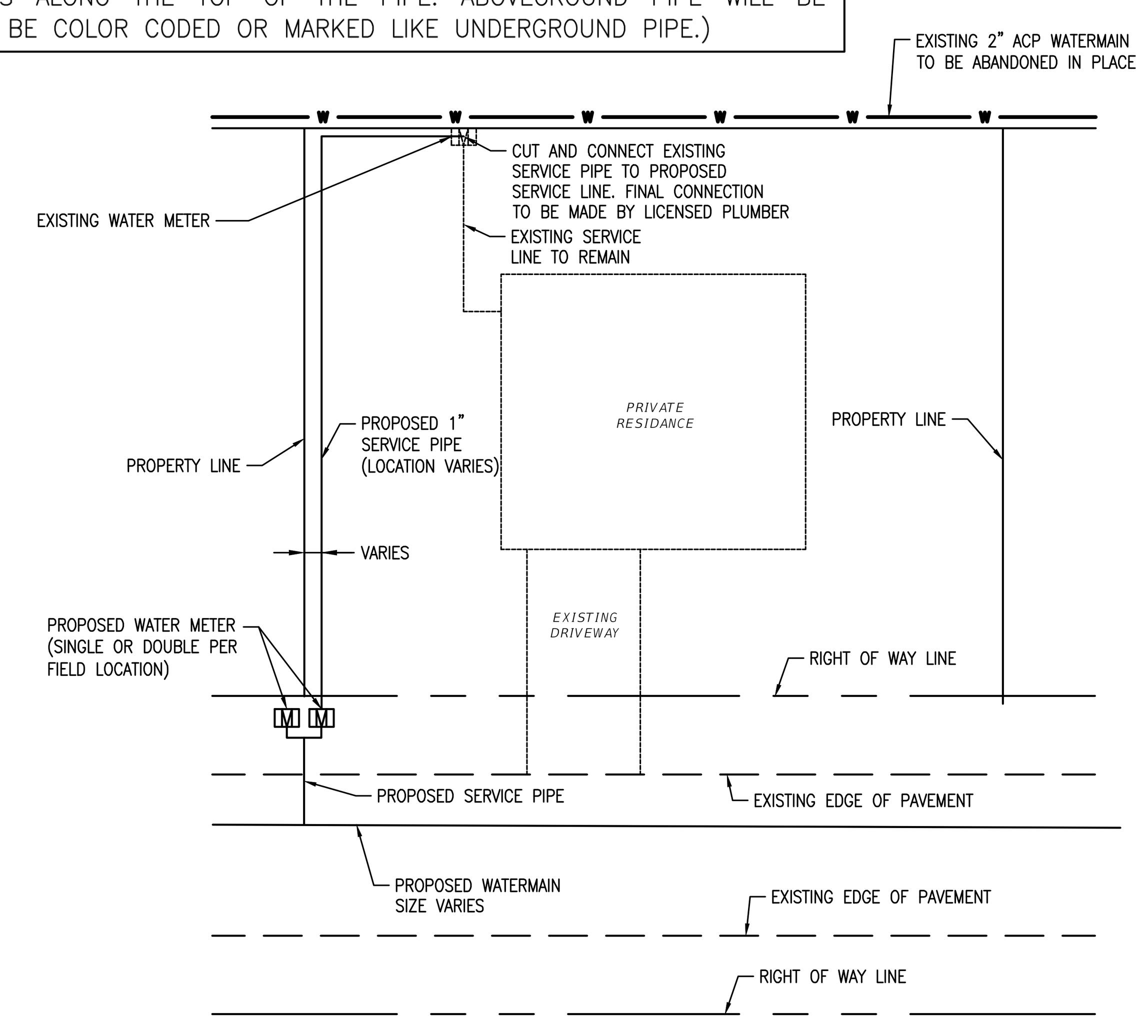

TYPICAL WATER METER CONNECTION DETAIL
(VARIES FOR EACH PROPERTY)

NOTES:

1. CONTRACTOR IS TO ALERT INDIVIDUAL HOMEOWNER 24 HOURS PRIOR TO DISRUPTION OF SERVICE.
2. CONTRACTOR IS TO COORDINATE ALL WORK WITHIN PRIVATE PROPERTY WITH INDIVIDUAL HOMEOWNERS.
3. CONTRACTOR TO RESTORE PRIVATE PROPERTY OF EXISTING CONDITIONS UPON INSTALLATION OF SERVICE LINE.
4. CONTRACTOR IS TO ROUTE SERVICE LINE SO AS TO AVOID CONFLICTS WITH EXISTING UNDERGROUND UTILITIES AND MINIMIZE LANDSCAPING DAMAGE.
5. MINIMUM HORIZONTAL CLEARANCE FROM UTILITIES TO BE 6" MINIMUM.
6. CONTRACTOR IS TO MAINTAIN A MINIMUM COVER OF 24" WITHIN LIMITS OF PRIVATE PROPERTY.
7. SEQUENCE OF WORK (UPON CLEARANCE OF INSTALLED WATERMAIN);
   A. INSTALL NEW METER BOX WITH SPOOL PIECE IN PLACE OF NEW METER.
   B. INSTALL PROPOSED SERVICE FROM NEW METER BOX TO EXISTING METER BOX.
   C. TURN OFF EXISTING SERVICE UPSTREAM OF METER.
   D. CONNECT NEW SERVICE TO OLD SERVICE.
   E. REMOVE SPOOL PIECE.
   F. CONTRACTOR TO RELOCATE EXISTING METER TO NEW METER BOX OR INSTALL NEW METER AT CITY'S DISCRETION.
   G. REMOVE EXISTING METER BOX AND DISCARD.
7. CONTRACTOR SHALL BE RESPONSIBLE TO OBTAIN ALL REQUIRED PERMITS PRIOR TO WORK IN PRIVATE PROPERTIES, INCLUDING BUT NOT LIMITED TO, BUILDING PERMITS, HEALTH DEPARTMENT PERMITS, ETC.

RER-DERM WATER-SEWER GENERAL NOTES

1. A horizontal distance of at least 6 feet, and preferably 10 feet (outside to outside), shall be maintained between gravity or pressure sewer pipes and water pipes. The minimum horizontal separation can be reduced to 3 feet for vacuum-type sewers or for gravity sewers where the top of the sewer pipe is at least 6 inches below the bottom of the water pipe. When the above specified horizontal distance criteria cannot be met due to an existing underground facility conflict, smaller separations are allowed if one of the following is met:
   a) The sewer pipes are designed and constructed equal to the water pipe and pressure tested at 150 psi.
   b) The sewer is encased in a watertight carrier pipe or concrete.
   c) The top of the sewer is at least 18 inches below the bottom of the water pipe.
2. A vertical distance of at least 12 inches (outside to outside) shall be maintained between any water and sewer mains with sewer pipes preferably crossing under water mains. The minimum vertical separation can be reduced to 6 inches for vacuum-type sewers or for gravity sewers where the sewer pipe is below the water main. The crossing shall be arranged so that all water main joints are at least 6 feet from all joints in gravity and pressure sewer pipes. This distance can be reduced to 3 feet for vacuum-type sewers. When the above specified vertical distance criteria cannot be met due to an existing underground facility conflict, smaller separations are allowed if one of the following is met:
   a) The sewer pipes are designed and constructed equal to the water pipe and pressure tested at 150 psi.
   b) The sewer is encased in a watertight carrier pipe or concrete.
3. Air release valves shall be provided at high points of new force main sanitary sewers.
4. Gravity sanitary sewers constructed within a public wellfield protection area shall be C-900 PVC or Ductile Iron Pipe. The maximum allowable exfiltration rate of gravity sanitary sewers constructed in a public wellfield protection area shall be:
   a) Residential Land Uses. Fifty (50) gallons per inch pipe diameter per mile per day, based on a minimum two (2) hour test having a minimum of two (2) feet of positive head above the crown of the pipe.
   b) Non-Residential Land Uses. Twenty (20) gallons per inch pipe diameter per mile per day, based on a minimum two (2) hour test having a minimum of two (2) feet of positive head above the crown of the pipe.
   c) Any observed leaks or any obviously defective joints or pipes shall be replaced even when the total leakage is below that allowed.
5. The maximum allowable exfiltration rate of gravity sanitary sewers constructed outside a public wellfield protection area shall be one hundred (100) gallons per inch pipe diameter per mile per day, based on a minimum two (2) hour test having a minimum of two (2) feet of positive head above the crown of the pipe. Any observed leaks or any obviously defective joints or pipes shall be replaced even when the total leakage is below that allowed.
6. Forcemain sanitary sewers constructed within a public wellfield protection area shall be ductile iron, C-900 PVC, HDPE or reinforced concrete pressure sewer pipes.
7. The maximum allowable exfiltration/leakage rate of forcemain sanitary sewers shall be:
   a) Ductile Iron, C-900 PVC, HDPE and PVC Pipe. The allowable leakage rate specified in American Water Works Association Standard (AWWAS) C600-82 at a test pressure of 100 psi for a duration of not less than two (2) hours.
   b) Reinforced Concrete Pressure Pipe. Half (1/2) the allowable leakage rate specified in AWWA C600-82 at a test pressure of 100 psi for a duration of not less than two (2) hours.
   c) Any observed leaks or any obviously defective joints or pipes shall be replaced even when the total leakage is below that allowed.
8. The contractor shall verify nature, depth, and character of existing underground utilities prior to start of construction.
9. In no case shall a contractor install utility pipes, conduits, cables, etc. in the same trench above an existing water or sewer pipe except where they cross.
10. If any area of the work site is found to contain buried solid waste and/or ground or ground water contamination, the following shall apply:
    a) All work in the area shall follow all applicable safety requirements (e.g., OSHA, etc.) and notification must be provided to the appropriate agencies.
    b) Immediately notify the Environmental Monitoring and Restoration Division (EMRD). The EMRD can be contacted at (305) 372-6700.
    c) If contaminated soils and/or buried solid waste material is excavated during construction, then they require proper handling and disposal in accordance with the local, state and federal regulations. Be advised that the landfill owner/operator is the final authority on disposal and may have requirements beyond those provided by herein. If disposal within a Miami-Dade County owned landfill (Class I landfill) is appropriate and selected, please contact the Miami-Dade County Department of Solid Waste Management at (305) 594-6666 for information.
    d) The reuse of contaminated soils that are not returned to the original excavation requires prior approval of a Soil Management Plan from the Environmental Monitoring and Restoration Division. The EMRD can be contacted at (305) 372-6700.
11. Pumps must comply with the National Electrical Code (NEC) requirements for Class I, Group D, Division 1 locations (Explosion Proof).
12. The contractor is advised that a Tree Removal/Relocation Permit may be required prior to the removal and/or relocation of tree resources. Prior to removing or relocating any trees, the Contractor shall notify the Tree and Forest Resources Section of DERM at (305) 372-6574 or via e-mail at: tfrs@miamidade.gov , or contact the municipality with tree ordinance jurisdiction to obtain any required permits. Those trees not interfering with the construction shall be protected in place in accordance with the provisions of Section 24-49.5 of the Miami-Dade Code.
13. Please note that the demolition, removal, and/or disturbance of existing underground utilities that contain asbestos- cement pipes (ACP) are subject to the provisions of 40 CFR-61 Subpart M. Therefore, pursuant to the provisions of 40 CFR-61-145, a NOTICE OF DEMOLITION OR ASBESTOS RENOVATION form must be filed with the Air Quality Management Division (AQMD) of DERM, at least ten (10) working days prior to starting of any work. Note that the backfilling and burial of crushed ACP would cause these locations to be considered active disposal sites and subject to 40 CFR-61.154, and 40 CFR-61.151 a year after project completion.
    Existing standard operating procedures, as well as applicable federal, state and local regulatory criteria, must be followed and implemented to minimize any potential release of fugitive emissions, especially during project construction activities. The AQMD can be contacted via email at asbestos@miamidade.gov or 305-372-6925.

Rev. 4/30/2018

p:\pollution regulation\delegated env permitting\ww-conv_extensions\sewer extensions\forms and package\se application package\se permit package\package march-2017\rer-derm-notes official last one-revised(2018-0429).doc

THE OFFICIAL RECORD OF THIS SHEET IS THE ELECTRONIC FILE DIGITALLY SIGNED AND SEALED UNDER RULE 61G15-23.004, F.A.C.

H. W. LOCHNER, INC.
CONSULTING ENGINEERS AND PLANNERS
8750 NW 36th STREET - SUITE 360
MIAMI, FLORIDA - 33178

MIAMI GARDENS WATER MAIN IMPROVEMENTS
CITY OF OPA-LOCKA

GENERAL NOTES AND DETAILS

NO	DATE	REVISION	BY	NO	DATE	REVISION	BY
–	–	.	–				–

MOHAMMED SHARIFUZZAMAN, P.E.
STATE OF FLORIDA PROFESSIONAL ENGINEER
LICENSE NO. 67640

DATE: APR 22, 2022

SCALE: AS SHOWN
PROJECT No: 19356
SHEET: C19

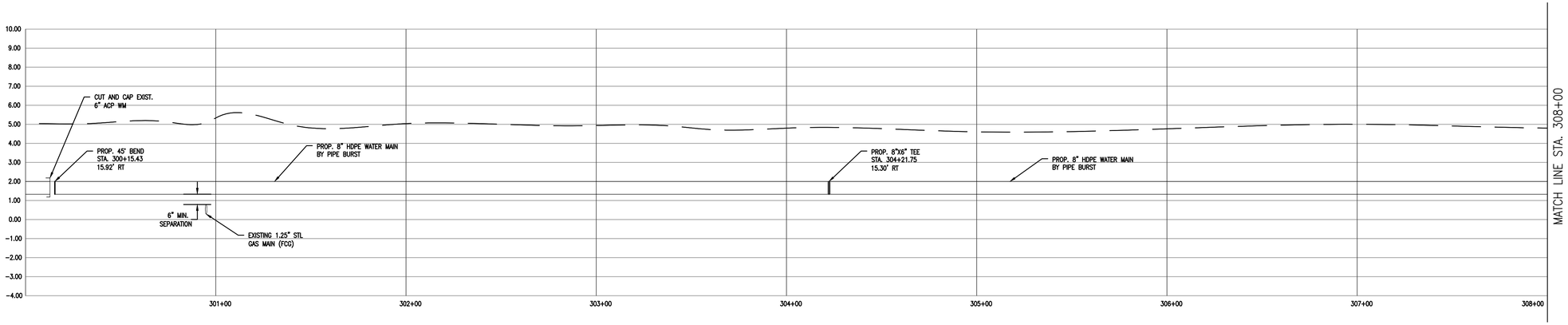

NW 32ND AVE.

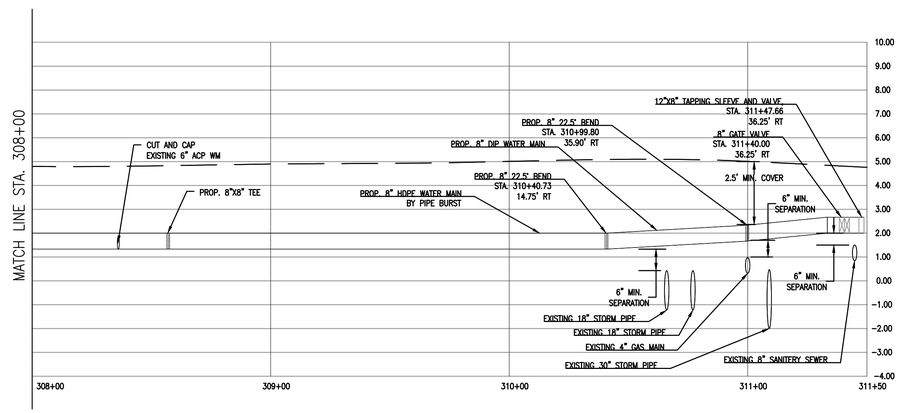

NW 32ND AVE.

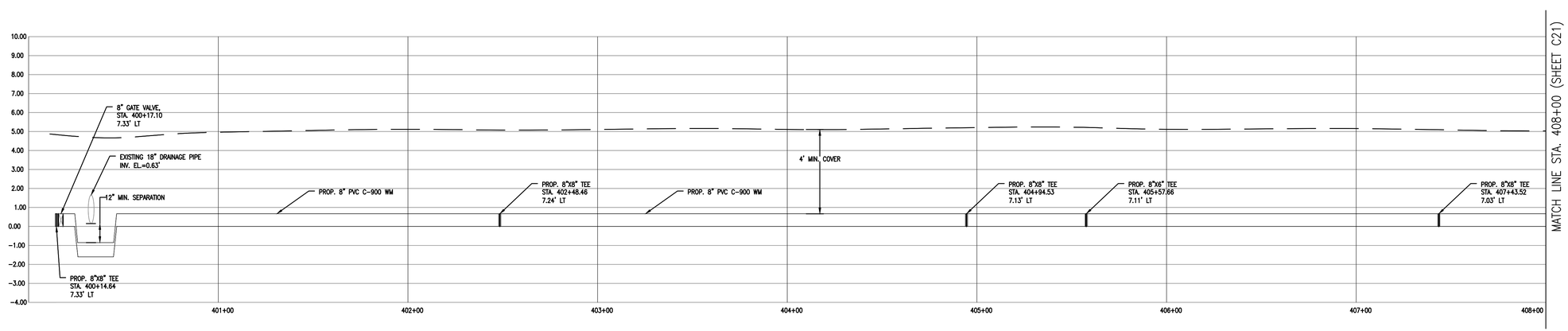

NW 151ST TERR.

WATER MAIN PROFILE

HORIZONTAL SCALE: 1" = 30.0'
VERTICAL SCALE: 1" = 3.0'

FOR PERMITS

H. W. LOCHNER, INC.
CONSULTING ENGINEERS AND PLANNERS
8750 NW 36th STREET - SUITE 360
MIAMI, FLORIDA - 33178

MIAMI GARDENS WATER MAIN IMPROVEMENTS
CITY OF OPA-LOCKA

WATER MAIN PROFILE

NO	DATE	REVISION	BY	NO	DATE	REVISION	BY

MOHAMMED SHARIFUZZAMAN, P.E.
STATE OF FLORIDA PROFESSIONAL ENGINEER
LICENSE NO. 67640

DATE: APR 22, 2022

SCALE: AS SHOWN
PROJECT No: 19356
SHEET: C20

File Name: I:\MIA\PRJ\000019356\700_CADD\WM Profile Detail.dwg - (Plotted by: Sharifuzzaman, Mohammed on Friday, February 10, 2023 10:34:16 AM)

THE OFFICIAL RECORD OF THIS SHEET IS THE ELECTRONIC FILE DIGITALLY SIGNED AND SEALED UNDER RULE 61G15-23.004, F.A.C.

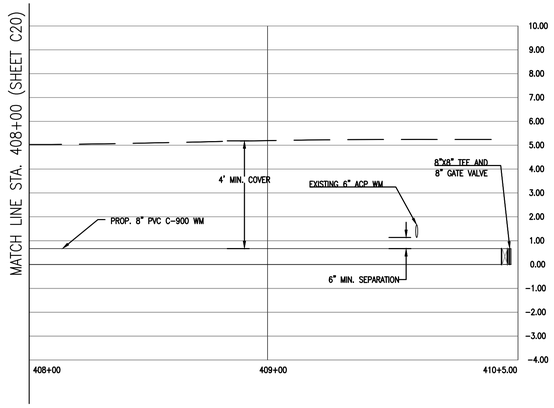

NW 151ST TERR.

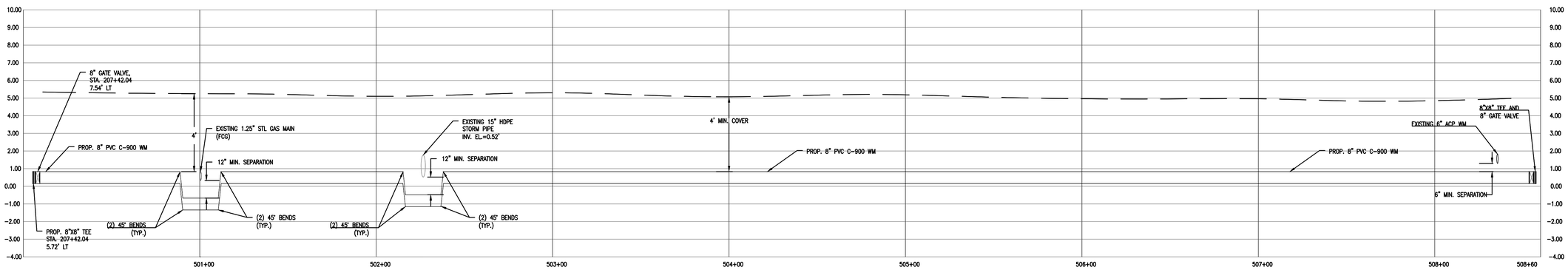

NW 33RD AVE.

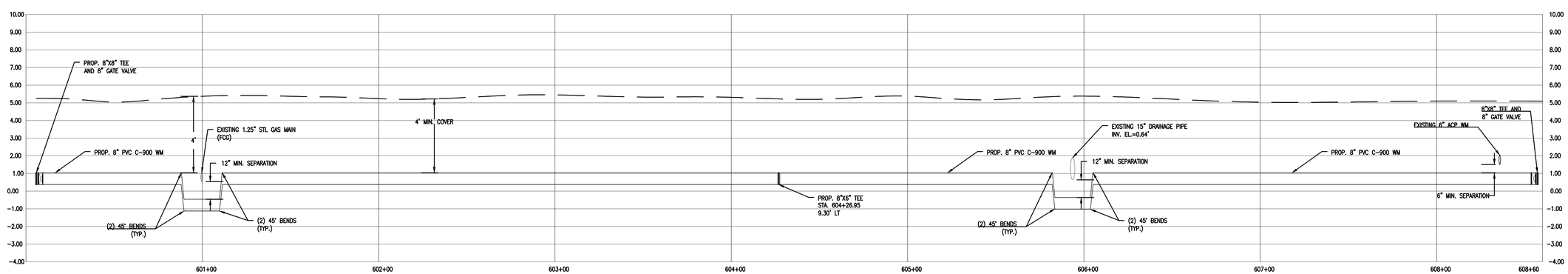

NW 32ND PL.

WATER MAIN PROFILE

HORIZONTAL SCALE: 1" = 30.0'
VERTICAL SCALE: 1" = 3.0'

FOR PERMITS

H. W. LOCHNER, INC.
CONSULTING ENGINEERS AND PLANNERS
8750 NW 36th STREET - SUITE 360
MIAMI, FLORIDA - 33178

MIAMI GARDENS WATER MAIN IMPROVEMENTS
CITY OF OPA-LOCKA

WATER MAIN PROFILE

NO	DATE	REVISION	BY	NO	DATE	REVISION	BY

MOHAMMED SHARIFUZZAMAN, P.E.
STATE OF FLORIDA PROFESSIONAL ENGINEER
LICENSE NO. 67640

DATE: APR 22, 2022

SCALE: AS SHOWN

PROJECT No: 19356

SHEET: C21

File Name: I:\MIA\PRJ\00019356\700_CADD\WM Profile Detail.dwg - (Plotted by: Sharifuzzaman, Mohammed on Friday, February 10, 2023 10:34:40 AM)

THE OFFICIAL RECORD OF THIS SHEET IS THE ELECTRONIC FILE DIGITALLY SIGNED AND SEALED UNDER RULE 61G15-23.004, F.A.C.

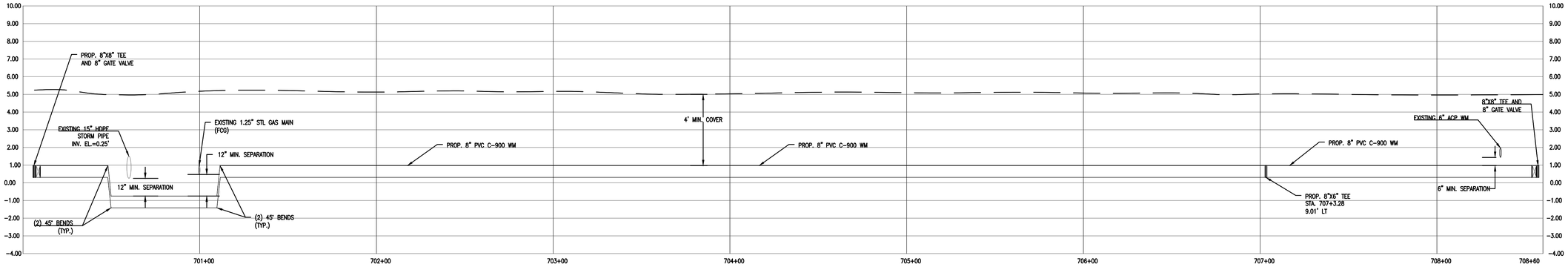

NW 32ND CT.

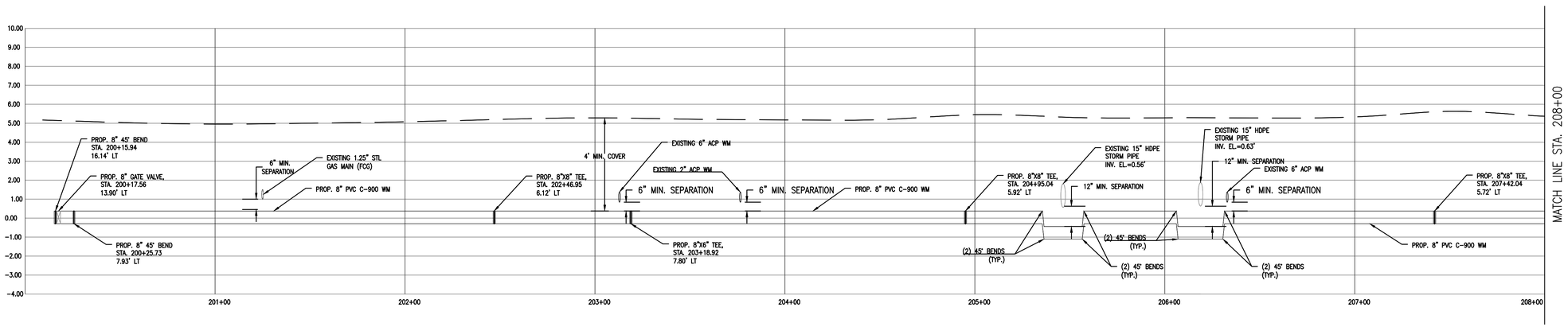

NW 154TH TERR.

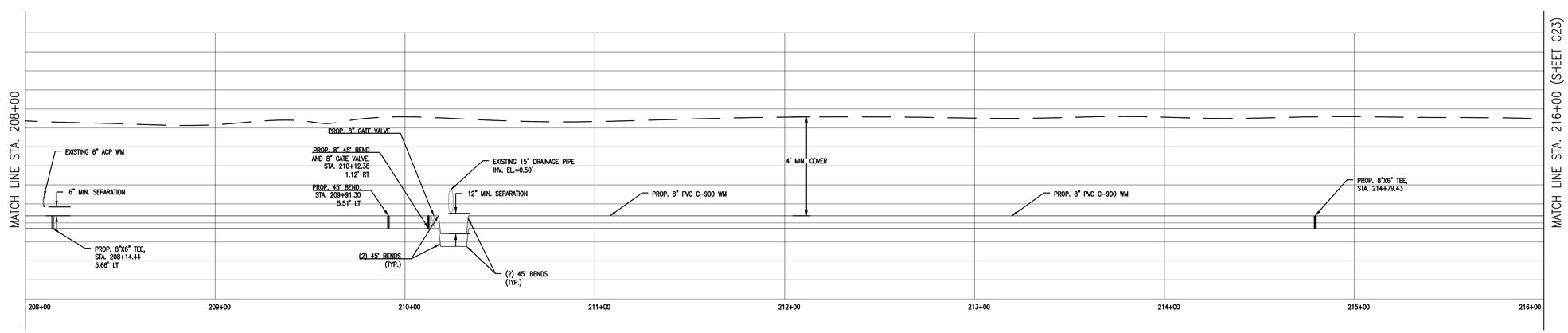

NW 154TH TERR. NW 33RD CT.

WATER MAIN PROFILE

HORIZONTAL SCALE: 1" = 30.0'
VERTICAL SCALE: 1" = 3.0'

FOR PERMITS

H. W. LOCHNER, INC.
CONSULTING ENGINEERS AND PLANNERS
8750 NW 36th STREET - SUITE 360
MIAMI, FLORIDA - 33178

MIAMI GARDENS WATER MAIN IMPROVEMENTS
CITY OF OPA-LOCKA

WATER MAIN PROFILE

NO	DATE	REVISION	BY	NO	DATE	REVISION	BY

MOHAMMED SHARIFUZZAMAN, P.E.
STATE OF FLORIDA PROFESSIONAL ENGINEER
LICENSE NO. 67640

DATE: APR 22, 2022

SCALE: AS SHOWN
PROJECT No: 19356
SHEET: C22

File Name: L:\MIA\PRJ\00019356\700_CADD\WM Profile Detail.dwg - (Plotted by: Sharifuzzaman, Mohammed on Friday, February 10, 2023 10:35:04 AM)

THE OFFICIAL RECORD OF THIS SHEET IS THE ELECTRONIC FILE DIGITALLY SIGNED AND SEALED UNDER RULE 61G15-23.004, F.A.C.

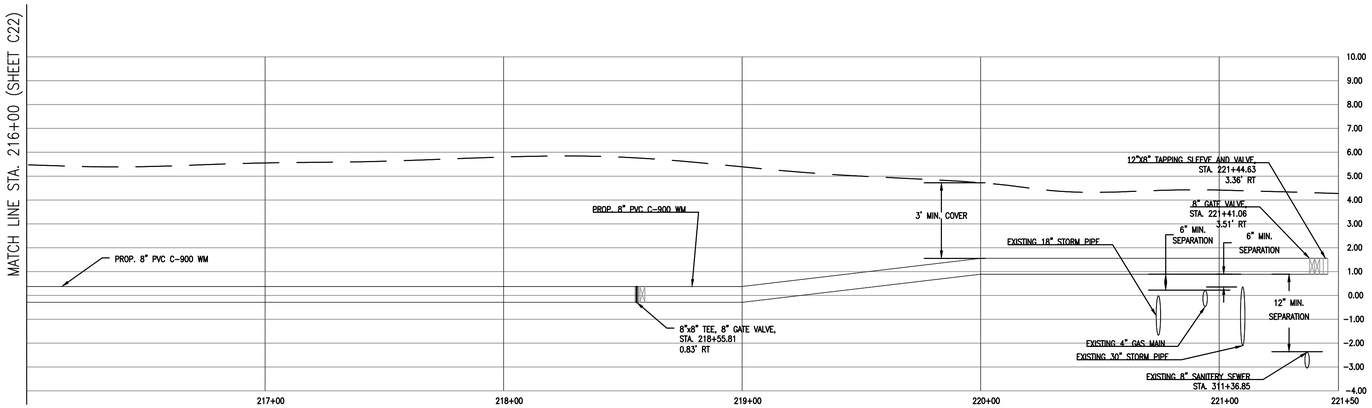

NW 33RD CT.

WATER MAIN PROFILE

HORIZONTAL SCALE: 1" = 30.0'
VERTICAL SCALE: 1" = 3.0'

FOR PERMITS

H. W. LOCHNER, INC.
CONSULTING ENGINEERS AND PLANNERS
8750 NW 36th STREET - SUITE 360
MIAMI, FLORIDA - 33178

MIAMI GARDENS WATER MAIN IMPROVEMENTS
CITY OF OPA-LOCKA

WATER MAIN PROFILE

NO	DATE	REVISION	BY	NO	DATE	REVISION	BY

MOHAMMED SHARIFUZZAMAN, P.E.
STATE OF FLORIDA PROFESSIONAL ENGINEER
LICENSE NO. 67640

DATE: APR 22, 2022

SCALE: AS SHOWN

PROJECT No: 19356

SHEET: C23

File Name: I:\MIA\PRJ\000019356\700_CADD\WM Profile Detail.dwg - (Plotted by: Sharifuzzaman, Mohammed on Friday, February 10, 2023 10:35:21 AM)

THE OFFICIAL RECORD OF THIS SHEET IS THE ELECTRONIC FILE DIGITALLY STORED AND SEALED UNDER RULE 61G15-23.004, F.A.C.

CONTRACTOR'S PRICING PROPOSAL

The CONTRACTOR offers the following for providing all labor, materials, equipment, etc. to complete Miami Gardens Water Main Improvements project in accordance with the contract documents.

Item	Description of Item	UOM	Qty	Price
1.01	**General Requirements**	LS	1	
1.02	**Mobilization and Demobilization (3% Max.)**	LS	1	
1.03	**Maintenance of Traffic (2% Max.)**	LS	1	
1.04	**Prevention, Control and Abatement of Erosion and Water Pollution**	LS	1	
1.05	**Clearing & Grubbing, Demolition, Removal & Disposal**	LS	1	
1.06	**Water Main, Water Services, Potable Water Systems**	LS	1	
1.07	**Permit Fee and Owner's Contingency Allowance**	AL	1	**150,000.00**
	Grand Total (Items 1.01 thru 1.07)			

Grand Total (Written in words)

Name of CONTRACTOR

Signature **Title** **Date**

CONTRACTOR'S PRICING PROPOSAL CONTINUED
Unit Price Schedule

The CONTRACTOR is to provide unit prices for the following Work contained in the Contract Documents which may be added or deleted at the discretion of the Owner.

Item	Description	Unit	Unit Price
1	Furnish and Install 8" PVC (C-900) water main w/fittings and all restoration work	LF	
2	Furnish and Install 8" DIP water main w/fittings and all restoration work	LF	
3	Furnish and Install 6" DIP water main w/fittings and all restoration work	LF	
4	Pipe Bursting, Furnish and Install 8" HDPE water main w/fittings and all restoration work	LF	
5	Furnish and Install Fire Hydrants w/fittings and all restoration work	EA	
6	Furnish and Install 8" Gate Valves, valve box and all restoration work	EA	
7	Furnish and Install 6" Gate Valves, valve box and all restoration work	EA	
8	Furnish and Install 1" HDPE water service with fittings and meter boxes and all restoration work	LF	
9	Furnish and Install 2" HDPE water service with fittings and 3" casing pipe and all restoration work	LF	
10	Furnish labor, equipment, and materials as necessary to design, permitting and construct water service relocations from rear lots to front locations (see detail on Sheet 19) and all restoration work	EA	
11	Furnish and installation of reinforced concrete Curb (3000 PSI, Class I), Type 'D' curb, Valley Gutter, Type F curb and Gutter	LF	
12	Furnish labor, equipment, and materials to furnish and install concrete sidewalk, Base and Subgrade per Details and Specifications	SY	
13	Removal/demolition of existing sidewalk and disposal	SY	
14	Furnish labor, equipment, and materials to furnish and install concrete pavers, brick pavers systems w/Base and Subgrade per Details and Specifications	SY	
16			
17			

_____

Name of CONTRACTOR

_____

Signature **Title** **Date**

MIAMI GARDENS WATER MAIN IMPROVEMENTS

VOLUME II

October 2022

Prepared by:

H.W. LOCHNER, INC.
8750 NW 36th STREET, SUITE 360
MIAMI, FL 33178
Phone: (305) 503-9873

Mohammed Sharifuzzaman, P.E.
FL P.E. License Number 67640

This item has been digitally signed and sealed by Mohammed Sharifuzzaman, P.E. on 12/15/2022. Printed copies of this document are not considered signed and sealed and the signature must be verified on any electronic copies.

THIS PAGE LEFT INTENTIONALLY BLANK

TABLE OF CONTENTS

CITY OF OPA-LOCKA

MIAMI GARDENS WATER MAIN IMPROVEMENTS

LOCHNER Project No. 19356

TECHNICAL SPECIFICATIONS

UC-000	WATER MAINS
UC-900	PVC C900 WATER MAIN
UC-033	CONCRETE, MORTAR AND GROUT
UC-075	WATER SERVICE INSTALLATIONS
UC-080	METER BOXES, SECTIONAL PLATES AND VAULTS FOR WATER SERVICE
UC-085	WATER METER VALVES
UC-170	CLEANING AND TESTING OF MAIN
UC-175	DISINFECTION OF WATER MAIN
SECTION 01005	DEFINED TERMS
SECTION 01010	SUMMARY OF WORK
SECTION 01011	SITE CONDITIONS
SECTION 01015	GENERAL REQUIREMENTS
SECTION 01016	SAFETY REQUIREMENTS AND PROTECTION OF PROPERTY
SECTION 01018	ENVIRONMENTAL CONTAMINATION
SECTION 01021	OWNER ALLOWANCES
SECTION 01025	MEASUREMENT AND PAYMENT
SECTION 01031	GRADES, LINES AND LEVELS
SECTION 01070	CUTTING AND PATCHING
SECTION 01090	REFERENCE STANDARDS
SECTION 01100	SPECIAL PROJECT PROCEDURES
SECTION 01140	SECURITY
SECTION 01150	PRE-CONSTRUCTION CONFERENCE
SECTION 01200	PROJECT MEETINGS
SECTION 01152	APPLICATION FOR PAYMENT
SECTION 01310	CONSTRUCTION SCHEDULES
SECTION 01340	SHOP DRAWINGS, PRODUCT DATA, AND SAMPLES
SECTION 01370	SCHEDULE OF VALUES
SECTION 01380	CONSTRUCTION PHOTOGRAPHS AND VIDEO PHOTOGRAPHY

SECTION 01410	TESTING AND TESTING LABORATORY SERVICES
SECTION 01581	PROJECT SIGNS
SECTION 01600	MATERIAL AND EQUIPMENT SHIPMENT, HANDLING, STORAGE, AND PROTECTION
SECTION 01700	CONTRACT CLOSEOUT
SECTION 01710	CLEANING
SECTION 01720	PROJECT RECORD DOCUMENTS
SECTION 01725	PROJECT AS-BUILT/RECORD DRAWINGS
SECTION 01730	OPERATING AND MAINTENANCE DATA
SECTION 01740	PERMITS
SECTION 01750	MAINTENANCE OF TRAFFIC AND PUBLIC STREETS
SECTION 02230	CLEARING AND GRUBBING
SECTION 02314	EXCAVATION, BACKFILL AND FILL FOR STRUCTURAL FACILITY AND UTILITY SYSTEMS
SECTION 02505	CLEANING AND TESTING OF MAIN
SECTION 02536	PRECAST MANHOLES & COVERS
SECTION 02741	PRIME AND TACK COATS
SECTION 02745	PAVEMENT REMOVAL AND REPLACEMENT
SECTION 02765	PAVEMENT MARKINGS AND TRAFFIC SIGNS
SECTION 02900	LANDSCAPING
SECTION 03300	CAST-IN-PLACE CONCRETE, REINFORCING AND FORMWORK
SECTION 03375	FLOWABLE FILL
SECTION 03600	GROUT
SECTION 05550	CASTINGS
SECTION 15060	PIPING AND FITTINGS
SECTION 15065	MISCELLANEOUS MATERIALS
SECTION 15070	JACKING AND BORING
SECTION 15075	PIPE BURSTING USING PRE-CHLORINATED PIPE
SECTION 15080	HORIZONTAL DIRECTIONAL DRILLING
SECTION 15100	VALVES, GENERAL
SECTION 15102	TAPPING SLEEVES AND TAPPING VALVES
SECTION 15110	BUTTERFLY VALVES
SECTION 15115	CHECK VALVES
SECTION 15120	GATE VALVES
SECTION 15125	PLUG VALVES
SECTION 15130	MISCELLANEOUS VALVES
SECTION 15330	FIRE HYDRANTS

APPENDIX A – PERMIT DOCUMENTS

Miami-Dade County Fire Department, Miami-Dade County Health Department

Miami-Dade County Public Works, City of Miami Gardens, City of Opa-Locka

SECTION 33 14 13 (UC-000)

WATER MAINS

PART 1 GENERAL

1.01 SCOPE

A. These Specifications shall govern the design, materials and installation requirements of the OWNER for construction of potable water mains pipes and fittings including fire hydrants, water services, valves and other appurtenances.

B. The OWNER does not allow the use of 10-inch, 14-inch or 18-inch pipe, fittings or valves, except as may be approved for connections to existing mains.

C. This section does not purport to cover all materials or installation procedures which may be required, whether by the nature of the proposed work, or by the OWNER, or by other regulatory agencies.

D. The OWNER intent is to obtain a complete and working installation under this project, and any items of labor, equipment or materials which may reasonably be assumed as necessary to accomplish this end shall be supplied whether or not they are specifically shown on the Plans or stated herein.

1.02 RELATED WORK SPECIFIED ELSEWHERE

A. The work shall proceed in accordance with the following specification sections, bound herein:
1. Section 02 00 00 (01011) – “Site Conditions”
2. Section 01 35 26 (01016) – “Safety Requirements and Protection of Property”
3. Section 01 71 23 (01031) – “Grades, Lines and Levels”
4. Section 01 35 13 (01100) – “Special Project Procedures”
5. Section 01 55 26 (01750) – “Maintenance of Traffic and Use of Public Streets”
6. Section 33 05 98 (15065) – “Miscellaneous Materials”

B. Water for construction shall be provided in accordance with Section 01 35 13 (01100) “Special Project Procedures”.

1.03 QUALITY ASSURANCE

A. All material and installation shall be in accordance with the applicable MDWASD‘s Design and Construction Standard Specifications and Details.

B. The material and installation for this project shall be in full compliance with all

applicable MDWASD Standards and any other applicable standards listed in Section 01 42 19, (01090) “Reference Standards”. Instructions from the OWNER designated representative in the field shall be followed by the Contractor.

1.04 DEFINITIONS

A. See section 01 42 16 (01005), “Defined Terms”

1.05 PROJECT APPROVAL

A. Potable water mains shall follow the Miami-Dade Water and Sewer Department Rules and Regulations (Implementing order 10-8) and Master Plan for sizing. Mains shall be constructed in accordance to the Water and Sewer Standard Details, cleaned, tested, and disinfected under the supervision of the OWNER designated Construction Manager, in accordance with Section 33 01 10.54 (02505) “Cleaning and Testing of Mains” and Section 33 01 10.58 (UC-175) “Disinfection of Water Mains”.

B. In addition, systems shall be designed in accordance with the requirements of the Miami-Dade County Department of Regulatory and Economic Resources (RER) Division of Environmental Resource Management (DERM), Fire Department (Miami-Dade and/or City), Florida Department of Health, and the Miami-Dade Water and Sewer Department Standards and Specifications.
   1. Properties shall be serviced by individual meters connected to water services from the water main.
   2. Fire hydrants shall be located to provide adequate fire flow protection to properties along the route of the main. Hydrant locations shall be approved by the Fire Department.
   3. A sufficient number of valves shall be provided on water mains to minimize inconvenience and sanitary hazards during repairs. Tee and crosses shall have a valve on each branch minus one. Valves should be located at not more than 660 foot intervals.
   4. Installed pipe shall be designed to be mechanically restrained to the design pressure. Lengths of restrained pipe shall be identified on the Plans.

1.06 PERMITS, INSPECTIONS AND FEES

A. The Contractor shall obtain and pay for all permits, official inspections and all other official fees, in connection with the work, in accordance with Section 01 31 46 (01740), "Permits".

B. Inspection by the OWNER personnel is required in addition to, not in lieu of, municipal and other County department inspections (if any).

C. No installation will be accepted until it has passed all inspections, including pavement installation or replacement.

1.07 PRECONSTRUCTION CONFERENCE

A. Prior to commencement of the work, the Contractor shall attend a Preconstruction Conference in accordance with Section 01 31 19.13 (01150) “Preconstruction Conference”.

1.08 SUBMITTALS

A. The contractor shall submit all shop drawings in accordance with Section 01 33 23 (01340) “Shop Drawings”

B. The Contractor shall furnish "As-Builts" in accordance to Section 01 78 40 (01725) “Donation Project As-Builts” and to Section 01 78 39 (01720) “Project Record Documents”, whichever applies to the project.

C. The contractor shall submit operating and maintenance instructions and all other submittals in accordance with Section 01 78 23 (01730) “Operating and Maintenance Data”

D. Where the specifications require test certification or certification that certain products or material furnished are as specified, the contractor shall deliver such certification to the OWNER. No material or equipment shall be approved for use in the work until individual certification has been received.

E. Final as-builts shall be submitted to the OWNER at the time of final pressure testing and disinfection. The Contractor shall be responsible for as-builts submittal to all applicable regulatory agencies.

1.08 SAFETY REQUIREMENTS

A. See Section 01 35 26 (01016) “Safety Requirements”

B. In the instance of men working within the manholes, the Contractor shall provide safety provisions to cover any possible consequences of structural failure and/or flooding. Such provisions might take the form of, but not be limited to, ladder nearby and in position to permit rapid egress; safety harness; stand-by pumping equipment; extra air supplies; and such other measures as the situation and good construction practices might indicate.

C. Contractor shall avoid any tampering with active OWNER facilities, such as operating valves on active mains. Any work on active mains shall be coordinated with the appropriate OWNER personnel.

PART 2 - PRODUCTS

2.01 PIPE MATERIAL

A. All material for use in the project shall be new and of recent manufacturing and shall be the products of reliable manufactures or suppliers who, otherwise specified, have been regularly engaged in the manufacture of such materials and equipment for at least five years. And that comply with the MDWASD standards & specifications, permitted plans and shall use any or all of the following materials:

1. Ductile Iron Pipe in accordance with Section 33 14 00 (15060) “Piping and fittings” can be used at any locations and from sizes 4” to 54”.
2. Poly Vinyl Chloride Pipe (PVC) in accordance with Section 33 05 31.16 “PVC C900 water main”; can be used at locations with salt intrusion protection requirements with low heavy traffic loading conditions and from sizes 4” to 16”.
3. High Density Polyethylene pipe (HDPE) in accordance with Section 33 05 07.13 (15080) “Horizontal Directional Drilling”; can be used at locations when directional drilling is needed and from sizes as needed and approved by the Engineer.
4. Concrete pipe in accordance with Section 33 05 39 “Concrete water main”; as approved by the Engineer.
5. Steel pipe in accordance with Section 33 05 24.01 (15075) "Aerial Crossings" and 33 14 00 (15060) “Piping and fittings”; can be used at locations when aerial crossings and steel casings are needed and from sizes as needed and approved by the Engineer.

B. On areas where there is information that indicates presence of contamination, pipe material shall be Ductile Iron and in accordance with sections 33 14 00 (15060) “Piping and fittings” and 02 61 00 (01018) “Environmental Contamination”

2.02 WATER SERVICES

A. See section 33 14 17 (UC-075) “Water Service Installations”

2.03 CASTINGS

A. Unless otherwise indicated, all materials, workmanship and practices shall be in accordance with the current edition of the ASTM A48, "Gray Iron Castings", Class 35B. Proof Loading: AASHTO M306 Loading.

B. Castings shall be in compliance with Section 33 05 81 (05550) “Castings”

C. MANHOLE FRAMES AND COVERS

1. Manhole frames and covers shall be Type "A" with roadway cover, U.S.F.F. No. 310 or approved equal. (See Miami Dade Water and Sewer Department's Standard Detail SS 4.0) The covers shall be cast labeled "Water” and in compliance with Section 33 05 81 (05550) “Castings”.

D. METER BOX COVERS

1. Cast iron meter covers shall have the words "WATER METER" plus the manufacturer's name permanently marked on the top surface of the cover. The letter size may range from 3/8 inch to 3/4 inch with the larger size covers having the larger size letters. The letters on the cast iron covers shall be slightly raised. Covers shall have a non-skid surface pattern, shall be furnished with cast iron meter-reading lids and in compliance with Section 33 05 81 (05550) “Castings”.

E. VALVE BOXES AND COVERS

1. Valve boxes for use with all main line valves, air release devices and flushing valve outlets shall be WASD No. 3. Valve boxes for use with fire hydrants, service lines, by-pass valves and fire line valves shall be WASD No.2. Valve box covers shall be cast labeled with the letter "W", shall have a roadway type surface, shall be non-rocking, and in compliance with Section 33 05 81 (05550) “Castings”.

2.04 BRICK

A. Concrete brick shall conform to ASTM Standard C55 "Concrete Building Brick". Clay brick may be substituted for concrete brick. Clay brick shall conform to ASTM Standard C62, "Building Brick (Solid Masonry Units Made from Clay or Shale)".

B. Bricks shall have true edges and sharp corners and shall have been cured for at least 14 days before being placed.

2.05 CONCRETE, MORTAR AND GROUT

A. See section 03 00 00 (UC-033) “Concrete, mortar and grout”

2.06 FIRE HYDRANTS

A. See section 40 05 81.13 (15330) “Fire hydrants”

2.07 VALVES

A. See section 40 05 58 (15100) “Valves General”
B. See section 40 05 63 (15105) “Ball Valves”
C. See section 40 05 64 (15110) “Butterfly Valves”
D. See section 40 05 65.23 (15115) “Check Valves”
E. See section 40 05 61.23 (15120) “Gate Valves”
F. See section 33 14 51 (15130) “Miscellaneous Valves”

2.08 TAPPING SLEEVE AND VALVE

A. See section 40 45 76.13 (15102) “Tapping Sleeves and Tapping Valves”

PART 3 EXECUTION

3.01 CONSTRUCTION METHODS

A. Set-up and Verification: The Contractor's Florida Licensed Professional Surveyor and Mapper is required to recover the design baseline and verify the elevations and coordinates on a regular basis as needed.

B. The Contractor is required to have a level instrument setup next to the construction site in order to control the vertical alignment of the pipe installation prior to trench backfilling. The level shall be setup daily for use by the surveyor, Contractor's foreman and OWNER Engineer/Inspector. Any underground construction work that does not have a level properly setup will be stopped by the OWNER/Inspector.

C. The Contractor is required to have a survey crew record the field information on a daily basis when there is underground pipe installation. The survey crew shall be on-site as needed to record and verify the information before it is covered. Any underground construction work that does not have the information recorded by a survey crew will be stopped by the OWNER/Inspector. The OWNER/Inspector has the authority to order re-excavation of work that was covered without accurate survey measurements.

D. The ends of existing mains shall be temporarily capped or plugged and anchored to keep them clean and the joints from blowing apart from internal pressure until the new main can be connected to them.

E. Where existing paving is damaged or removed by the Contractor, temporary paving as specified in Section 32 12 16 (02745) "Pavement removal and Replacement" shall be placed the same day as the ditch backfill and it shall be replaced with permanent paving, where shown on the Plans, within thirty (30) days or in accordance with the local governing agency having jurisdiction.

F. In addition to specific construction methods specified elsewhere, the following general requirements shall apply to the work under this project.

1. Pipe and fittings shall at all times be handled with great care to avoid damage. In loading and unloading, they shall be lifted with cranes or hoists or slid or rolled on skidways in such manner as to avoid shock. Under no circumstances shall this material be dropped or allowed to roll or slide against obstructions. Pipe and other material shall be distributed along the right-of-way in advance of installation only to the extent approved by the OWNER. Such materials shall be so placed as to keep obstruction to traffic at a minimum.
2. Any work within the pipe and fittings shall be performed with care to prevent damage to the lining. Damaged lining shall be repaired, or the pipe section or fitting replaced as required by the OWNER. No cables, lifting arms, hooks or other devices shall be inserted into the pipe or fitting. All lifting, pulling or pushing mechanisms shall be applied to the exterior

of the pipe or fitting.

3. The Contractor's attention is called to the fact that connections to existing mains will probably involve the removal of a concrete anchor and cast iron plug; also, that the existing mains may be cast iron with poured lead Sulphur compound, or rubber gasket type joints, concrete with flanged outlet connections, galvanized iron with threaded joints, or others. The Contractor should be equipped with the proper tools and equipment to make connections to any one or more of these existing mains.
4. The Contractor shall eliminate dust annoyance to adjacent property owners by sprinkling his work area with water or by other approved means.

G. When mains are to be installed within existing street areas, the Contractor shall limit the amount of ditch open at any one time to one block (approximately 600 feet). The work in each block, including excavation, pipe laying, backfilling and temporary paving shall be completed before proceeding with the work in the next block.

H. Boring and jacking operations and trenches remaining open to facilitate the repair of existing underground utilities damaged by the Contractor during excavation shall not be deemed a portion of the allowable 600 feet of open trench, unless otherwise decided by the OWNER at its discretion.

I. When mains are to be installed within existing street areas, the Contractor may employ more than one installation crew on the Project but not less than 1200 feet shall separate any two open trench sections as defined hereinbefore.

3.02 EXCAVATION AND COMPACTED BACKFILL

A. See section 31 23 33 (02315) “Trenching & Backfilling for piping systems”

3.03 WATER SERVICE INSTALLATIONS

A. See Section 33 14 17 (UC-075) “Water Service installations”.

3.04 INSTALLATION OF PIPE AND FITTINGS

A. The centerline of the pipe shall not vary by more than two inches from the location shown on the Plans and the top of the pipe shall not vary by more than two inches from the established grade, except at points where this tolerance must be changed to clear obstructions or make connections. Deviation from this location will be permitted only upon approval from the OWNER.

B. Upon satisfactory excavation of the pipe trench and completion of the pipe bedding, up to the level of the outside bottom of the proposed pipe barrel, recesses for the pipe bells, or couplings, shall be excavated by hand digging. When the pipe is laid in the prepared trench, true to line and grade, the pipe barrel shall receive continuous, uniform support and no pressure will be exerted on the pipe joints from the trench bottom. Placing and compacting the bedding up to

the level of the lower one-third of the pipe barrel shall immediately follow the installation of the pipe.

C. The interior of the pipes shall be thoroughly cleaned of all foreign matter before being gently lowered into the trench and shall be kept clean during laying operations by means of plugs or other approved methods. During suspension of work for any reason at any time, a suitable stopper shall be placed in the end of the pipe last laid to prevent mud or other foreign material from entering the pipe. Any pipe found defective shall be immediately removed and replaced with sound pipe.

D. Lines shall be laid straight and depth of cover shall be maintained as shown on the Plans. Grades or pipe centerline elevations are shown on the Plans. The Contractor will be permitted to use surveying instruments to maintain alignment and grade. At least one elevation shot shall be taken every one hundred feet (100') or portion thereof and deviation along the pipeline.

E. All bends, tees and plugs shall be mechanical restrained at a minimum according to standard GS 2.0. Encasement type thrust anchors and collars shall be placed where indicated on the Plans. The bearing area and/or volume of concrete in the anchors and blocks shall be as shown on the Plans.

F. All bolts, nuts, gaskets and other joint materials for use in the pipeline shall be properly protected.

G. Gaskets shall be properly stored, and care shall be exercised to keep them away from heat, light, oil, gasoline or other petroleum products. Gaskets shall be kept clean at all times and not handled with greasy or dirty hands. Gaskets shall be installed just prior to installation of pipe.

H. The joints of all pipelines shall be properly homed. The particular joint used shall be approved by the Engineer prior to installation.

I. Unless otherwise directed, pipe shall be laid with the bell ends facing in the direction of laying; and for lines on an appreciable slope, the bells shall, at the discretion of the Engineer, face upgrade.

J. Push-on, restrained push-on and mechanical joints in ductile iron pipe and fittings shall be made in accordance with the manufacturer's standards except as otherwise specified herein. Joints between push-on and mechanical joint pipe and/or fittings shall be made in accordance with AWWA Standard C600, "Installation of Ductile Iron Water Mains and Their Appurtenances", except that deflection at joints shall not exceed one half of the manufacturer's recommended allowable deflection, or one-half of the allowable deflection specified in AWWA C600, whichever is the lesser amount.

K. Before laying push-on, restrained push-on and mechanical joint pipe and fittings, all lumps, blisters and excess bituminous coating shall be removed from the bell and spigot ends. The outside of each spigot and the inside of each bell shall be

wire brushed and wiped clean and dry. The entire gasket groove area shall be free of bumps or any foreign matter which might displace the gasket. The cleaned spigot and gasket shall not be allowed to touch the trench walls or trench bottom at any time. Vegetable soap lubricant shall be applied in accordance with the pipe manufacturer's recommendations, to aid in making the joint. The workmen shall exercise caution to prevent damage to the gasket or the adherence of grease or particles of sand or dirt. Deflections shall be made only after the joint has been assembled.

L. Flanged joints shall be used only where indicated on the Plans. Before making up flanged joints in the pipeline, the back of each flange under the bolt heads and the face of each flange shall have all lumps, blisters and excess bituminous coating removed and shall be wire brushed and wiped clean and dry. Flange faces shall be kept clean and dry when making up the joint, and the workmen shall exercise caution to prevent damage to the gasket or the adherence of grease or particles of sand or dirt. Bolts and nuts shall be tightened by opposites in order to keep flange faces square with each other, and to ensure that bolt stresses are evenly distributed.

M. Bolts and nuts in flanged and mechanical joints shall be tightened in accordance with the recommendations of the pipe manufacturer for a leak-free joint. The workmen shall exercise caution to prevent overstress. Torque wrenches shall be used until, in the opinion of the Engineer, the workmen have become accustomed to the proper amount of pressure to apply on standard wrenches.

N. Cutting of ductile iron pipe for inserting valves, fittings, etc., shall be done by the Contractor in a neat and workmanlike manner without damage to the pipe, the lining, or the coating. Pipe shall be cut with a mechanical pipe saw. After cutting the pipe, the plain end shall be filed to remove all sharp edges and burrs.

O. The pipe shall be restrained at reaction points as specified and shown on the Plans. The pipe manufacturer shall instruct the Contractor in the making of such joints. In addition, mechanical restraint per standard GS 2.0 at minimum shall be placed at all bends, tees, plugs and other fittings. Encasement-type thrust anchors and collars shall be placed where indicated on the Plans.

P. Taps into ductile iron pipe for corporation stops shall be AWWA tapered thread only, and the Contractor shall provide suitable equipment for this purpose as approved by the OWNER.

Q. Any work within the pipe shall be performed with care to prevent damage to the lining. Damaged lining shall be repaired as recommended by the pipe manufacturer or the pipe section replaced as required by the Engineer. No cables, lifting arms or other devices shall be inserted into the pipe. All lifting, pulling, or pushing mechanisms shall be applied to the exterior of the pipe barrel.

R. Unless otherwise approved by the Engineer, the pipeline shall be cleaned by pigging at intervals not to exceed 30 lengths of pipe. Cleaning methods shall meet the Engineer's approval, and must be sufficient to remove silt, rocks, or

other debris which may have entered the pipeline during its installation.

S. Polyethylene encasement of ductile iron pipe and fittings, riser pipe and valves, if required by the OWNER, shall be installed in accordance with ANSI/AWWA C105/A21.5, "Polyethylene Encasement for Ductile-Iron Piping for Water and Other Liquids" Method A or B.

T. Polyethylene encasement of valves and ductile iron riser pipes, if required by the OWNER, shall be installed in accordance with ANSI/AWWA C105/A21.5, "Polyethylene Encasement for Ductile-Iron Piping for Water and Other Liquids" Method A, B or C.

U. Lines shall be laid straight and depth of cover shall be maintained as shown on the Plans. Grades or pipe centerline elevations are shown on the Plans. The Contractor shall be permitted to use surveying instruments to maintain alignment and grade. At least one elevation shot shall be taken on each length of pipe and recorded. No abrupt changes in direction or grade will be allowed.

3.05 CLEANING, TESTING AND DISINFECTION

A. See sections 33 01 10.54 (UC-170) "Cleaning and Testing of Mains" and 33 01 10.58 (UC-175) “Disinfection of Water Mains”

3.06 PAVEMENT RESTORATION

A. See section 33 12 16 (02745) “Pavement Removal and Replacement”

3.07 SYSTEM INDENTIFICATION

A. All pipe and fittings shall be clearly identified as water mains. The standard color is Cyanine Blue (Carboline, Color No. 2127) for all above ground water system piping and appurtenances.

B. Buried pipes shall be color coded with a blue paint as stated in the Florida Administration Code, Subparagraph 62-555.320(21)(B)3 and as required by the Florida Department of Environmental Protection. If paint is applied during installation of the pipe, the paint shall be applied in a continuous line that runs parallel to the axis pipe and that is located on the top of the pipe. For pipes with an internal diameter of 24-inches or greater, paint shall be applied in continuous lines along each side of the pipe as well as along the top of the pipe.

END OF SECTION

SECTION 33 05 31.16

PVC C900 WATER MAIN

PART 1 GENERAL

1.01 SCOPE

A. This section includes materials, installation, and testing of PVC C900 for water main, conforming to AWWA C900. Size range is 4 through 16 inches.

B. PVC C900 water mains are acceptable for use in saltwater intrusion areas with limited heavy vehicle traffic only. Not for use near gas stations or other sites which may have hydrocarbon contamination.

C. All PVC pipe used shall be of new or recent manufacturer. Pipe with surface discoloration will not be allowed.

D. Pipe Fittings shall be ductile iron.

1.02 RELATED WORK SPECIFIED ELSEWHERE

A. Section 33 01 10.54 (02505) “Cleaning and Testing of Mains”

B. Section 33 01 10.58 (UC-175) “Disinfection of Water Mains”

C. Section 33 14 00 (15060) “Piping and fittings”

D. Section 33 14 13 (UC-000) “Water Mains”

1.03 SUBMITTALS

A. Submit shop drawings in accordance with the OWNER/MDWASD specifications or submit the Pre-Approved Product List Manufacturer.

B. PVC Pipe not on the Pre-Approved Products list shall supply the following:

1. Provide affidavit of compliance with AWWA C900.

2. Submit fully dimensioned cross-section of the bell and barrel of the pipe. Show the bell maximum outside diameter in the pressurized area and its minimum wall thickness at the same location.

3. Submit copies of the following manufacturer-required tests conducted on project pipe:

a. Quick-burst strength of pipe and couplings.

b. Flattening resistance of pipe.

c. Record of additional tests after test sample failure.

4. Submit manufacturer's literature of gray iron and ductile-iron fittings including dimensions, thickness, weight, coating, lining, and a statement of inspection and compliance with the acceptance tests of AWWA C110 or C153. Submit copy of report of pressure tests for qualifying the designs of all sizes and types of AWWA C153 fittings that are being used in the project. The pressure test shall demonstrate that the minimum safety factor described in AWWA C153 is met.

5. Submit outline drawings and materials description of service connection saddles, corporation stops, and pipe plugs.

6. Submit test results for the restrained joint system to be used certified by an independent test laboratory demonstrating compliance with these specifications for each size and pressure rating.

7. Submit restrained joint system installation instructions. Include bolt torque limitations and assembly tolerances.

1.04 QUALITY CONTROL

A. No deflection of joints is allowed for PVC pressure mains.

B. PVC pipe shall not be over-homed. Pipe installed below the water table where the homing mark is not visible shall utilize an over-insertion prevention device; EBAA Iron Mega-Stop Series 500; S&B Technical Product, RIG, Resistance Insertion Grip; or approved equal.

C. Pipe Embedment Material shall be class 1 backfill material with a maximum rock size of 3/4-inches.

D. The OWNER shall have the final determination on allowing the use of PVC C900 DR 18 for potable water mains. The Contractor/Design Engineer shall obtain approval in writing prior to finalizing 100% construction plans.

PART 2 - PRODUCTS

2.01 PIPE

A. Pipe 4-inches through 16 inches shall conform to AWWA C900 DR 18, rubber-ring gasket bell end or plain end with elastomeric gasket coupling, cast iron equivalent outside diameter, material cell classification 12454 per ASTM D1784, latest revision.

2.02 FITTINGS

A. Fittings shall be cement lined, Zinc coated Ductile Iron and conform to AWWA C153, latest revision or AWWA C110, latest revision.

2.03 FLANGES

A. Flanges on outlets of fittings shall be Class 250 per ASME B16.1.

B. PVC flanges shall be of the one-piece solid socket design and shall be made of the same material as the pipe. Manufacturer's pressure rating shall be at least 250 psi at a temperature of 73°F. Minimum burst pressure shall be 500 psi. Flanges shall match the dimensions of ASME B16.5, Class 250, steel flanges for outside diameter, bolt circle, and bolt holes. Do not use Van Stone flanges.

2.04 OUTLETS

A. All connections to PVC require a saddle.

2.05 RESTRAINED JOINTS

A. Provide restrained joints where indicated in the drawings. Restrained joints shall be provided by restraining systems that incorporate a wedge restraint on the restraint ring to provide positive restraint.

B. Restraint devices for bell-and-spigot joints shall consist of a split restraint ring installed on the spigot, connected to a solid backup ring seated behind the bell.

C. Restraining Glands shall be EBAA Iron Series 2000 and 1600 or approved equal.

D. The ASTM A536 ductile iron casting of the restrained gland shall be bonded powder coated. The wedge and wedge assembly shall have a bonded liquid polymer coating applied for corrosion protection. The gland shall utilize torque limiting twist off wedge actuation screws.

E. T-bolts, studs, and connecting hardware shall be high-strength, low alloy material in accordance with AWWA C111.

F. Design restraining devices to have a 2:1 safety factor based on the design strength of the pipe.

2.06 FLANGED COUPLING ADAPTERS

A. See Section 33 05 98 (15065) – "Miscellaneous Materials".

2.07 WYE STRAINERS

A. PVC wye strainers shall be manufactured of the same material as the pipe, with 30-mesh screens and Viton seals. Connecting ends shall be the socket type, solvent welded. Provide one spare screen for each strainer.

PART 3 - EXECUTION

3.01 PRODUCT MARKING AND UNDERGROUND LOCATION

A. Legibly mark pipe at 5-foot intervals and each coupling to identify the nominal diameter, the outside diameter base, that is, cast-iron or steel pipe (IPS), the material code for pipe and couplings, the dimension ratio number, AWWA C900, and the seal of the testing agency that verified the suitability of the material for potable water service (NSF/ANSI 61).

B. Install tracer wire taped to the buried PVC pipe and 3M compatible magnetic location ball markers every 5 feet. See Pre-Approved product list Sheet 10.2.

3.02 DELIVERY AND TEMPORARY STORAGE OF PIPE

A. PVC shall be protected from UV degradation caused by extended exposure to direct sun. Pipe with surface discoloration shall not be installed and immediately removed from the project site. Tarps used to protect the pipe from sunlight shall be placed to allow for adequate ventilation to prevent heat build-up.

B. Ship, store, and place pipe at the installation site, supporting the pipe uniformly. Avoid scratching the pipe surface. Do not stack higher than 4 feet or with weight on bells. Cover to protect from sunlight.

C. Do not drag PVC pipe over the ground, drop it onto the ground, or drop objects on it.

D. Store loose pipes on racks with a maximum support spacing of 3 feet. Provide shades for pipe stored outdoors or installed outdoors until the pipe is filled with water. Store fittings indoors in their original cartons.

E. Store solvent cement indoors or, if outdoors, shade from direct sunlight exposure. Do not use solvent cements that have exceeded the shelf life marked on the storage container.

3.03 HANDLING PIPE

A. Hoist pipe with mechanical equipment using a cloth belt sling or a continuous fiber rope that avoids scratching the pipe. Do not use a chain. Pipes up to 16 inches in diameter may be lowered by rolling on two ropes controlled by snubbing. Pipes up to 6 inches in diameter may be lifted by hand.

3.04 INSTALLING BURIED PIPING

A. Bedding material and backfill to 1 foot above the pipe for PVC shall be well graded Class 1 backfill with a max rock size of ¾-inch compacted in 6-inch lifts. The minimum trench width shall be the pipe width plus 24-inches (12-inches on each side).

B. Before installation, check pipe and fittings for cuts, scratches, gouges, buckling, kinking, or splitting on pipe ends. Remove any pipe section containing defects by cutting out the damaged section of pipe.

C. Do not install PVC pipe when the temperature is below 40°F or above 90°F.

D. Do not install pipe that is gouged or scratched forming a clear depression.

E. Install in accordance with AWWA C605, and as follows.

1. When installing pipe in trenches, do not deviate more than 1 inch from line or 1/4 inch from grade. Measure for grade at the pipe invert.

2. Backfill materials in the pipe zone shall be imported sand per Section 31 23 33 (02315) “Trenching and Backfilling of Piping Systems”. Do not add successive layers unless the previous layer is compacted to 90% relative compaction per ASTM D1557.

3. Compact material placed within 12 inches of the outer surface of the pipe by hand tamping only.

4. Compact trench backfill to the specified relative compaction. Do not float pipe. Do not use high-impact hammer-type equipment except where the pipe manufacturer warrants in writing that such use will not damage the pipe.

5. Pipe installed below the water table where the homing mark is not visible shall utilize an over-insertion prevention device.

6. Install detector balls every 100 feet on straight lines, at any point changing direction, vertical or horizontal; in addition, install tracer wire taped every 4 feet to the buried PVC C900 pipe.

3.05 PIPE LAYOUT FOR CURVED ALIGNMENT

A. Pipe lengths may not be bent for curved alignment.

3.06 ASSEMBLY OF RUBBER-GASKET PIPE JOINT

A. The spigot and bell or bell coupling shall be dirt free and slide together without displacing the rubber ring. Lay the pipe section with the bell coupling facing the direction of laying.

B. Insert the rubber ring into the groove in the bell in the trench just before joining the pipes. First clean the groove. Observe the correct direction of the shaped ring. Feel that the ring is completely seated.

C. Lubricate the spigot over the taper and up to the full insertion mark with the lubricant supplied by the pipe manufacturer. If the lubricated pipe end touches dirt, clean the pipe end and reapply lubricant.

D. Insert the spigot into the bell and force it slowly into position.

E. Check that the rubber ring has not left the groove during assembly by passing a feeler gauge around the completed joint.

3.07 CLEANING AND TESTING

A. All of the piping installed under this project shall be tested as follows and as directed by the Engineer.

1. With exceptions as noted below, all PVC piping installed under this Contract shall be cleaned and tested according to section 33 01 10.54 (UC-170) "Cleaning and Testing of Mains".

2. Unless otherwise specified elsewhere herein, all PVC water main shall be tested at 150 psi in accordance with ANSI/AWWA C605.

3.08 FIELD QUALITY CONTROL

A. All mains shall be flushed to remove all sand, debris, rock and other foreign matter. Dispose of the flushing water without causing a nuisance or property damage.

B. Pressure and Leakage Testing: Hydrostatically test all pressure pipe. Test PVC Pipe mains in accordance with ANSI/AWWA C605-once all backfill is in place and fully compacted, and after all thrust blocks, if applicable, have cured to their design strength. Do not test against closed valves. All pumps, piping and gauges shall be furnished, installed and operated by the Contractor and all such equipment and devices and their installation shall be approved by the Engineer. Pump shall be of a non-pulsating type suitable for this application and gauge accuracy certification may be required at the Engineer of Record's discretion. All pressure and leakage testing shall be done in the presence of a representative of the OWNER as a condition precedent to the approval and acceptance of the system.

3.09 DISINFECTION

A. Disinfect in accordance with section 33 01 10.58 (UC-175) “Disinfection of Water Mains and ANSI/AWWA C651 – Disinfecting Water Mains. During the period that the chlorine solution or slug is in the section of pipeline, open and close valves to obtain a chlorine residual at hydrants and other pipeline appurtenances. Swab exposed faces of valves and blind flanges prior to bolting flanges in place with a 1% sodium hypochlorite solution. Disinfect isolation valves, pipe, and appurtenances per AWWA C651, Section 4.7.

B. Flush with potable water until discolored water, mud, and debris are eliminated. Swab interior of pipe and fittings with a 1% sodium hypochlorite solution. After disinfection, flush with potable water again until water is free of chlorine odor. After confirming the chlorine residual, flush the excess chlorine solution from the pipeline until the chlorine concentration in the water leaving the pipe is either within 0.5 mg/L of the replacement water or no higher than that generally prevailing in the distribution system.

C. Discharge of chlorinated water into watercourses or surface waters is regulated by the National Pollutant Discharge Elimination System (NPDES). Disposal of the chlorinated disinfection water and the flushing water is the Contractor's responsibility. Schedule the rate of flow and locations of discharges in advance to permit review and coordination with Owner and cognizant regulatory authorities. For measuring chlorine concentration, supply and use a medium range, drop count, DPD drop dilution method kit per AWWA C651, Appendix A.1. Maintain kits in good working order available for immediate test of residuals at point of sampling.

END OF SECTION

SECTION UC-033

CONCRETE, MORTAR AND GROUT (SHORT)

PART 1 - GENERAL

1.01 SCOPE

A. The Contractor shall provide all labor, materials, equipment, appurtenances, incidentals, supervision and transportation necessary to complete all concrete, mortar and grout work required to construct the donation main. Such work shall include all related work called for by the Contract Drawings and/or specifications, or reasonably inferable from either or both, as needed for a complete and proper installation.

B. RELATED WORK

The work of this section includes, but is not limited to:

1. Materials and storage thereof.
2. Concrete proportions and mixes.
3. Admixtures.
4. Protection
5. Laboratory testing.

PART 2 - PRODUCTS

2.01 CONCRETE

A. GENERAL

1. All reinforced concrete shall have a minimum design strength of 4,000 psi, a minimum content of 564 pounds of Type I Portland cement per cubic yard, and a water cement ratio which will produce a slump of 4-inches plus or minus 1-inch. All concrete potentially exposed to sewage gas shall be Type II Portland cement, all other concrete shall have either Type I or Type II Portland cement.

2. Pipe supports, equipment pads and encasements shall have a minimum design strength of 3,000 psi.

3. Non-reinforced concrete for sidewalk, concrete and curb and gutter repairs, if required, shall have a minimum design strength of 3000 psi a minimum content of 517 pounds of Type I Portland cement per cubic yard, and a water-cement ratio which will produce a slump of 4 to 6 inches.

4. Non-reinforced concrete for thrust blocks shall a minimum design strength of 2,500 psi a minimum content of 470 pounds of Type I Portland cement per cubic yard. and a water-cement ratio which will produce a slump of 4 to 6 inches.

5. Tremie concrete shall have 500 pounds of Portland cement per cubic yard, and the W/C ratio

shall not exceed 0.45 with a slump of 7 inches, plus or minus 1 inch.

6. Materials for concrete shall conform to the requirements stated below.

B. CEMENT

1. The cement shall be a standard brand of Portland cement manufactured within the continental limits of the United States. It shall meet the requirements of ASTM Standard C 150 "Portland Cement", Type I or Type II.

2. The Contractor shall provide suitable means for storing and protecting the cement against dampness. Bags of cement which for any reason may become partially set, or which contain lumps of caked cement, shall be rejected. In no instance shall any portion of a bag of damaged cement, or a bag containing lumps of caked cement, be used. Cement salvaged from discarded or used sacks shall not be used. Different brands of cement, even if tested and approved, shall not be mixed during use, nor used alternately in any section of the work without written permission of the Engineer of Record.

C. FINE AGGREGATE

1. The fine aggregate shall consist of sand or stone screenings, composed of hard durable grains, having not more than three percent (3%) by weight of foreign matter, such as loam clay, dirt or other impurities, and shall be free from injurious amounts of organic impurities. When subjected to the calorimetric test for organic impurities and producing a color darker than the standard No. 2 color, it shall be rejected unless it passes the mortar strength test. Fine aggregate, when subjected to the mortar strength test, shall have tensile and compressive strengths at the end of seven (7) and twenty-eight (28) days, not less than 100 percent of those developed by mortar of the same proportions and consistency, made of the same cement and standard Ottawa sand. Fine aggregate, when tested by means of laboratory sieves shall conform to the following requirements:

Size Sieve	Percent Passing
3/8"	100
No.4	90 to 100
No. 8	70 to 95
No. 16	50 to 85
No. 30	30 to 70
No. 50	10 to 45
No. 100	0 to 10

2. Subsequent samples of fine aggregate shall have a fineness modulus varying not more than 0.20 either way from that of the initial sample submitted by the Contractor, when determined by ASTM methods. Fine aggregate from more than one source shall not be mixed nor used alternately in the construction without written permission from the Engineer of Record.

D. COARSE AGGREGATE

1. Coarse aggregate shall consist of gravel, broken stone or local limerock. It shall be free from adherent coatings, and the amount of contained deleterious substances shall not

exceed the following:

Contained Deleterious Matter Percentage by Weight

Removed by decantation	1.0
Shale	0.5
Coal	0.5
Soft fragments	3.0
Other local deleterious substances such as alkali, friable, thin elongated or laminated pieces	3.0
Total shale, coal, clay lumps and soft fragments	3.0

2. Tests for impurities shall be made in accordance with applicable methods of the American Society for Testing and Materials.

3. Coarse aggregate shall have a loss of not greater than forty (40) percent when tested in accordance with ASTM Standard C 131 "Resistance to Degradation of Small Size Coarse Aggregate by Abrasion and Impact in the Los Angeles Machine".

4. Coarse aggregate, unless otherwise specified, shall meet the following gradation requirements:

Size Sieve	Percent Passing
1 ½"	100
1"	95 to 100
½"	25 to 60
No. 4	0 to 10
No. 8	0 to 6

5. Sieve sizes and tests for gradation of fine and coarse aggregate shall be in accordance with applicable specifications of the American Society for Testing and Materials.

6. Coarse aggregate from more than one source shall not be mixed or used alternately in the construction without written permission of the Engineer of Record.

E. WATER

1. Water used in mixing the concrete that is not in the form of surface moisture on the aggregate shall be from the OWNER water supply or other approved source.

2. The water measuring equipment shall be capable of accurate measurement to one percent of requirements.

3. The amount of water used shall be the design mixture amount for the cement less the amount of surface moisture on the aggregates as represented by the additional weights of fine and coarse aggregate over and above the design mixture amounts. Minor changes to adjust the

slump of the concrete to the proper value may be made, provided that, when a small amount of water is added it be assumed that the variation was in the free moisture on one or both of the aggregates and their weights lessened by that amount. If the amount of water is decreased, the aggregate shall be increased a like amount.

F. ADMIXTURES

The use of admixtures must be approved by the Engineer of Record.

2.02 READY-MIXED CONCRETE

_A. The Contractor will be permitted to use concrete from a ready-mix concrete plant provided he submits the name of the company to the Engineer of Record for approval, and no concrete shall be placed in the work until such approval has been obtained. Concrete obtained from a ready-mix plant shall conform to the requirements of these Specifications, and to all applicable portions of ASTM Standard C94 "Ready-Mixed Concrete".

B. Central-mixed concrete, shrink-mixed concrete, or truck-mixed concrete will be acceptable from the ready-mix plant providing all requirements of ASTM C94 for these three methods are strictly adhered to.

C. The ready mix concrete company shall furnish the Engineer of Record with a Delivery Ticket with each load or batch of concrete before unloading at the work site. The Ticket shall contain the following information:

1. Name of ready-mix concrete company
2. Serial number of ticket
3. Date and truck number
4. Name of Contractor, job designation and location
5. Class of concrete per specifications
6. Amount of concrete (cubic yards)
7. Time loaded or of first mixing of cement and other materials
8. Type and brand of cement

E. Additional information may be required by the Engineer of Record, and may include :

1. Reading of revolution counter at first addition of water
2. Signature or initials of ready mix representative
3. Amount of cement
4. Total water content (or w/c ratio)
5. Maximum size of aggregate
6. Weights of fine and coarse aggregate
7. Indication that all ingredients are as certified or approved, etc.

D. Flowable fill for backfill/base within State Road rights-of-way, if required, shall be a mix as specified in Section 03375 “Flowable Fill”, from a FDOT approved plant.

2.03 TREMIE CONCRETE

Tremie concrete shall have 7 sacks of Type I Portland cement per cubic yard and W/C/ ratio not

to exceed 0.45 with a slump of 7 inches, plus or minus 1 inch.

2.04 CONCRETE CURING COMPOUND

Curing compound shall be as approved by the Engineer of Record. Where approved, curing compound shall be Horncure 30 D&C, by W.R. Grace, or approved equal.

2.05 CONCRETE COLORANT

Concrete colorant shall be Colorhard "Coral Gables Beige No. 3" or Colorhard "Jade Green, L80" by Lambert Corp., or approved equal.

2.06 MORTAR

____Mortar shall be composed of one part of Type I or Type II, as appropriate, Portland cement to three parts of sand, with sufficient lime putty added to secure workability. In no case shall the lime putty exceed 10% of the cement used. (See Section 04100)

2.07 GROUT

Grout shall be composed of one part of Type I or Type II, as appropriate, Portland cement to three parts of sand. (See Section 03600 “Grout” for additional specifications)

PART 3 - EXECUTION

3.01 LABORATORY CONTROL

The Contractor shall obtain the services of a reputable commercial testing laboratory approved by the Engineer of Record to design the concrete mixtures and supervise the mixing of the concrete in accordance with these Specifications. As used hereinafter, Laboratory shall mean the approved laboratory employed by the Contractor. The Laboratory shall furnish the Contractor and the Engineer of Record with complete reports of all tests made, design mixtures, and all concrete mixed for the Project.

A. TEST SAMPLES

1. MATERIALS

The Laboratory shall take samples of the aggregates. Failure of any of these samples to meet Specification requirements shall be cause for rejection of the material represented. The Laboratory shall submit certificates of tests showing the cement to meet Specification requirements. The Contractor may use cement from local supplies which meet the requirements of these Specifications when tested by the Laboratory.

2. CONCRETE

Test specimens of the actual concrete mix used in the work shall be made as designated by

the Engineer of Record. The test specimens will be taken in pairs from the same batch, one of which will be tested when seven days old and the other when twenty-eight days old. The making, storing, and testing of specimens shall be in accordance with the applicable requirements of ASTM methods, Standards C-31 and C-39, latest revisions. The results of tests of these specimens shall serve as an indication of the actual strengths obtained as compared with the design strengths. The Laboratory, on the basis of these tests, shall make such revisions in design mixture or method of mixing, within the limits of these Specifications, as are necessary to keep the test results equal to or greater than the design strength required. In the event the test results indicate that the concrete placed does not meet the Specification requirements, the Contractor shall be required to remove and replace it if, in the opinion of the Engineer of Record, such action is necessary.

B. DESIGN MIXTURES

The Laboratory shall see that the materials meet the Specification requirements, and then, design mixtures for the various classes of concrete, determining the proper proportions of surface dry aggregates in pounds and the amount of mixing water in gallons for each sack of cement to equal or exceed the strengths required in Subsection 2.01A above.

3.02 MIXING CONCRETE

A. MIXING CONDITIONS

The concrete shall be mixed only in such quantity as is required for immediate use and any which has developed initial set or has been mixed longer than 30 minutes shall not be used unless otherwise approved by the Engineer of Record.

B. MIXING TIME

1. Concrete shall be mixed thoroughly in a batch mixer of approved type, for a period of not less than 1-1/2 minutes after all materials are in the drum. The entire contents shall be removed from the drum before materials are placed therein for the succeeding batch.

2. The volume of material mixed per batch shall not exceed the manufacturer's rated capacity of the drum. Mortar or concrete which has partially set shall not be retempered by mixing the mortar or concrete with additional material or mortar.

END OF SECTION

SECTION UC-075

WATER SERVICE INSTALLATIONS

PART 1 - GENERAL

1.01 SCOPE

This Contractor shall furnish all labor, material and equipment required to construct water service installations, as specified herein.

1.02 RELATED SECTION

Section UC-080 - Meter Boxes, Sectional Plates and Vaults for Water Service
Section UC-085 - Water Meter Valves

1.03 LEAD FREE REQUIREMENT

A. It is a requirement that all components of water service installations be certified lead free. All brass components for water service installations shall comply with the S3874 amendment (Reduction of Lead in Drinking Water Act) to Section 1417 of the Federal Safe Drinking Water Act.

B. All meters, meter accessories, copper pipe, brass pipe, fittings, corporation stops, saddles, washers, tailpieces, couplings and other appurtenant items used for water services shall be “NL” no lead Type for installation in the WASD/OWNER system. Solders and flux shall contain no more than 0.2% lead.

C. All brass components shall be marked “NL” to indicate no lead.

D. All valves 2-inch and smaller shall conform to the No Lead, NL, requirement. Valves larger than 2-inches are exempt.

PART 2 - PRODUCTS

2.01 HDPE Pipe for Services

A. All 2-inch high density polyethylene pipe used for services shall be IPS-O.D. Controlled with Standard Outside Dimension Ratio (SODR) of 9, pressure rating of 250 psi, nominal outside diameter of 2.375-inches, minimum wall thickness of 0.264-inches, in conformance with Materials Standard PE 4710 "Polyethylene (PE) Plastic Pipe (DR-PR) Based on Controlled Outside Diameter". Pipe shall conform with ANSI/AWWA C901 "Polyethylene (PE) Pressure Pipe and Tubing, ½ In. (13 mm) Through 3 In. (76 mm), for Water Service" as modified herein. Pipe shall have a (natural) inner core with a blue colored outer shell. Pipe shall have footage marks at a maximum interval of every two feet. Polyethylene material shall have a minimum cell classification in accordance with ASTM D3350 "Polyethylene Plastics Pipe and Fitting Materials" of 445576D for

the core, which shall be 100% virgin material, and 445576E for the outer shell. Note that both of these materials are UV stabilized as signified by the "D" for natural colored and "E" for the colored shell. Pipe shall conform with NSF 61 or 14. Manufacturer shall supply certification of compliance with all of the above requirements. Certification shall ship with the pipe on material sold to the OWNER and shall always be submitted with shop drawings and catalogue cuts. When required by the OWNER or his designee, certification shall be signed and sealed by a professional engineer licensed to practice in the state in which the manufacturer is located or in the State of Florida.

B. All 1-inch high density polyethylene tubing used for services shall be CTS-O.D. Controlled with Standard Outside Dimension Ratio (SODR) of 9, pressure rating of 250 psi, nominal outside diameter of 1.315-inches, minimum wall thickness of 0.125-inches, PE 3408, all in conformance with Materials Standard PE 4710 "Polyethylene (PE) Plastic Tubing". Tubing shall conform with ANSI/AWWA C901 "Polyethylene (PE) Pressure Pipe and Tubing, ½ In. (13 mm) Through 3 In. (76 mm), for Water Service" as modified herein. Tubing shall have a (natural) inner core with a blue colored outer shell. Tubing shall have footage marks at a maximum interval of every two feet. Polyethylene material shall have a minimum cell classification in accordance with ASTM D3350 "Polyethylene Plastics Pipe and Fitting Materials" of 445576D for the core, which shall be 100% virgin material, and 445576E for the outer shell. Note that both of these materials are UV stabilized as signified by the "D" for natural colored and "E" for the colored shell. Tubing shall conform with NSF 61 or 14. Manufacturer shall supply certification of compliance with all of the above requirements. Certification shall ship with the tubing on material sold to the OWNER and shall always be submitted with shop drawings and catalogue cuts. When required by the OWNER or his designee, certification shall be signed and sealed by a professional engineer licensed to practice in the state in which the manufacturer is located or in the State of Florida.

C. All HDPE services require the use of a 10 gauge direct bury stranded copper blue tracer wire tapped every four feet with poly or duct tape for location purposes. The tracer wire shall be accessible at the meter box and connected to the corporation stop for continuity of the signal. The 10 AWG standard tracer wire shall have 0.030” HDPE insulation and measure 0.162” min O.D.

2.02 COPPER

A. Copper tubing shall conform to the requirements of NSF 61 and ASTM Standard B88. “Seamless Copper Water Tube”, Type “K”. All tubing shall be furnished in straight lengths. Fittings and valves shall be of the solder-joint type except where specified otherwise. Type L copper shall only be used on the customer side of the property and is not allowed on public right-of-ways.

B. Fittings for use with copper tubing shall be one of the following:

1. Cast bronze solder-joint fitting shall be in accordance with ANSI Standard B-16.18, “Cast Brass Solder-Joint Fittings”, and ASTM Standard B62-90, “Composition Bronze or Ounce Metal Castings”. Cast bronze solder-joint fittings shall be as manufactured by Chase Brass and Copper Co., Stanley G. Flagg & Co., Inc. Or approved equal.

2. Wrought copper solder-joint fittings shall be in accordance with ANSI Standard B16.22, “Wrought Copper and Bronze Solder-Joint Pressure Fittings”.

Connection of copper pipe or fittings with galvanized pipe or fittings shall be made with dielectric fittings. Solder shall be lead free type.

2.03 SERVICE TERMINAL FITTINGS

A. Single Meter Box Installation

a. One inch or 2-in copper or High Density Polyethylene (HDPE) tubing and terminal fittings.
b. 1" lock wing style valve, drilled for wire sealing, Cat. No. KV23-444W Ford Meter Box Co. or Cat. No. 14255, Mueller Co.
c. C.I. cover and lid as per MDWASD Standard Details

B. Duel Meter Box Installation

a. One inch or 2-in copper or High Density Polyethylene (HDPE) tubing and terminal fittings.
b. 1" branch valve assembly, with Standard 7 ½ -in spacing between outlet centers, drilled for wire sealing, Cat. No. UV23-42W Ford Meter Box Co. or 1-in branch connection with Standard 7 ½ in spacing between outlet centers Cat. No. H-15362, fitted with angle stops for 5/8 inch meters, drilled for wire sealing, Cat. No. H-14265, (3/4' Inlet) Mueller Co.
c. C.I. cover and lid as per MDWASD Standard Details

2.04 CASINGS FOR TORPEDO INSTALLATIONS

A Provide a PVC Schedule 40 casing or black steel pipe casing one inch in diameter larger than the service pipe when the service is installed with the use of a torpedo or required by the plans.

2.05 BRASS FITTINGS AND VALVES

A. All brass components shall be marked "NL" to indicate no lead.

B. Angle Key Meter Valves – Ford Meter Box Company KV-444W, Mueller or approved equal.

C. Brass Fittings – Merrit Brass or approved equal

D. Pack Joint, Swivel Nut – A.Y. McDonald Model 4761-22

E. Ball Corporation Stop – Ford Meter Box Company FB800, Mueller H-10003 or approved equal.

PART 3 - EXECUTION

3.01 INSTALLATION OF SERVICES

A. Services from the new water mains shall consist of corporation stops, HDPE or copper tubing and terminal fittings as shown in the Standard Details. All service installations from the new

main shall be installed by the Contractor.

B. Where possible, all meter boxes shall be installed in non-traffic and non-parking areas.

C. Where meter boxes are located in existing sidewalks, the whole flag of sidewalk shall be removed and replaced with new concrete. The concrete walk shall be 4 inches thick (minimum) and finished with the proper tools and techniques to resemble the existing walk. The concrete support for meter boxes shall be eliminated when the box is installed in an existing sidewalk. Where meter boxes are located out of sidewalk areas, a concrete support is required. Concrete supports shall be to the established line and grade.

D. Meter boxes shall be set flush with the finished grade if in sidewalks, or flush with the top of the ground if out of sidewalk areas.

E. All bends in copper tubing shall be made with an approved type tube bender to the satisfaction of the OWNER. Flattened, out of round or kinked tubing will not be permitted.

E. One inch service connections shall be one of the following:

1. Short Single - Consisting of a short run of HDPE or copper tubing from the main on the same side of the street as the proposed meter, to the meter installation approximately 2 ½ feet from property line. Single meter box installation included.

2. Long Single - Same as above but from a main on the opposite side of the street from the proposed meter.

3. Short Dual - Consisting of a short run of HDPE or copper tubing from the main on the same side of the street as the proposed meter to the meter installation, approximately 2 ½ feet from the property line and branched off to serve an additional customer. Dual meter box installation included.

4. Long Dual - Same as above but from a main on the opposite side of the street from the proposed.

F. If PVC or black steel casing pipe for services crossing existing pavement is required, the pipe may be driven from the side of the street which affords the most room for the driving trench, thus resulting in the least number of couplings in the casing. Extra care shall be used in leveling and heading the first length of casing in the proper direction. One method of driving casing, known to work in this area and offered here as a suggestion, is to use an ordinary coupling screwed on the leading end of the casing as a cutting edge, and driving against a coupling screwed on the tailing end with a special tool in a pneumatic hammer, while maintaining a steady pull forward on the hammer with a small winch. Each length of casing as driven shall be cleaned out with compressed air introduced through a one-half-inch pipe at least as long as the casing. The purpose of driving casing pipe is to make it unnecessary to repair paving over one-inch service cuts. Should the Contractor elect to open-trench any one-inch service line across pavement, he will be required to repair the paving.

G. The Contractor shall install the meter box, 1-inch branch assembly, 30 inch tailpieces and perforated spacers.

H. When installing services the Contractor shall temporarily plug the ends of the tail pieces for protection against dirt.

I. Pipe bedding and the backfill material to at least 6 inches above the crown of the copper tubing shall be clean white masonry sand. Backfilling and compaction of material lying above a point 6 inches above the crown of the tubing and below the surface of the ground shall be as specified in Section 02315, "Trenching and Backfilling for Piping Systems".

J. The Contractor will install the meters into the boxes installed by the Contractor in presence of the OWNER/inspectors.

END OF SECTION

THIS PAGE LEFT INTENTIONALLY BLANK

SECTION UC-080

METER BOXES, SECTIONAL PLATES AND VAULTS FOR WATER SERVICE

PART 1 - GENERAL

1.01 SCOPE OF WORK

A. The Contractor shall furnish and install all concrete meter boxes, lids, sectional plates and precast vaults required for a complete installation.

B. All concrete meter boxes, sectional plates and vaults shall be in accordance with the MDWASD's Standard Details and as specified herein.

PART 2 - PRODUCTS

2.01 GENERAL

All materials used in the production of the concrete meter boxes, lids sectional plates and vaults shall be new and or recent manufacture. Aggregates shall not originate in salt or brackish water areas and no calcium chloride containing admixtures shall be used.

2.02 FINE AGGREGATE

Fine aggregate for concrete mixes shall consist of sand or stone screening, composed of hard durable grains, free of foreign matter such as loam, clay, dirt, organic matter or other impurities. Fine aggregate shall conform to the following gradation requirements:

Size Sieve	Percent Passing
3/8"	100
No. 4	90 to 100
No. 8	70 to 95
No. 16	50 to 85
No. 30	30 to 70
No. 50	10 to 45
No. 100	0 to 10

2.03 COARSE AGGREGATE

A. Coarse aggregate for concrete mixes shall consist of gravel, broken stone or local limerock.

B. Coarse aggregate shall be hard, durable and free of foreign matter such as loam, clay, dirt, organic matter or other impurities. It shall be free of adherent coatings. Coarse aggregate shall conform to the following gradation requirements:

1. Meter Boxes, Lids and Sectional Plates

Size Sieve	Percent Passing
3/4"	100
1/2"	90 to 100
3/8"	40 to 70
No. 4	0 to 15
No. 8	0 to 5

2. Vaults

Size Sieve	Percent Passing
1-1/2"	100
1"	95 to 100
1/2"	25 to 60
No. 4	0 to 10
No. 8	0 to 6

2.04 CEMENT

A. Cement shall be a standard brand of Portland cement meeting the requirements of ASTM C150-86, "Portland Cement", Type I.

B. Different brands of cement, even if tested and approved, shall not be mixed during use.

2.05 REINFORCING STEEL

A. General: All reinforcing steel shall be free of rust, grease, dirt or mortar and shall be thoroughly cleaned of any such foreign matter or loose mill scale before being placed in position.

B. Wire reinforcement shall conform to ASTM A82, "Steel Wire, Plain, for Concrete Reinforcement".

C. Wire mesh reinforcement shall conform to ASTM A185, "Steel Welded Wire, Fabric, Plain for Concrete Reinforcement".

D. Bar reinforcement shall conform to ASTM A615-7a, "Deformed and Plain Billet-Steel Bars for Concrete Reinforcement", Grade 60, deformed, except that steel manufactured by the Bessemer process will not be accepted.

2.06 WATER

Water used in mixing concrete that is not in the form of surface moisture on the aggregate shall be from the OWNER's water supply or other approved source. (See "Water Used in Construction" of Section 01100)

PART 3 - EXECUTION

3.01 MANUFACTURE

A. General

All concrete meter boxes, lids, sectional plates and vaults shall be manufactured in accordance with the applicable provisions of ASTM C858, "Underground Precast Concrete Utility Structures", as modified herein.

B. Forms

1. The Forms shall be made from of a non-porous material with smooth surfaces and shall be accurate and strong enough to maintain the structure's dimensions within one half of the allowable tolerances given in Section 3.4 of ASTM C858

2. The precast sections for 4' x 4' vaults shall be constructed with a threaded metal insert in accordance with Standard Detail No. WS 2.20, Sheet 1 of 2, contained herein. Also, each section shall be furnished with a corner bolt.

C. Cleaning and Oiling: Forms shall be cleaned before each use, and shall be free of paint or other protective coatings that might cling to the surface of the concrete. Releasing agents applied to the form to aid in breaking the bond shall not be injurious to the concrete.

D. Reinforcement: Steel reinforcing shall be securely positioned in the form to maintain the concrete cover shown on the Standard Details.

E. Mixture

1. The aggregates shall be sized, graded, proportioned and thoroughly mixed in a batch mixer with proportions of cement and water that will produce a homogeneous concrete having a compressive strength of 3500 psi at 28 days of age for the boxes and plates and 3000 psi for the vaults after the same curing period.

2. Batched concrete shall be made in standard concrete mixers only, and not in mortar boxes, wheelbarrows or similar equipment.

3. Mixers shall be standard mechanical (power-driven) rotary type for concrete. Mixers normally used for mortar or plaster mixing will not be permitted.

F. Concrete Placement

1. Concrete shall be placed either by gravity into the form at a rate such that the concrete is plastic at all times and flows readily into all parts of the form and around all reinforcement steel without segregation of materials, or by highspeed pneumatic rammer resulting in sense, evenly compacted concrete without disturbing the reinforcement. The surfaces from top to bottom shall show uniform compaction.

2. The top surface of the molded items shall be flat and finished smooth while in the mold. Capping will not be permitted. Where required by the OWNER, corners shall be rounded.

G. Curing: Curing shall be by any method or combination of methods that will develop the required compressive strength within 28 days or less.

H. Repairs: The precast units may not be repaired without specific approval by the OWNER.

I. Inspection: The quality of materials, manufacturing process, and the finished units shall be subject to inspection at any time by the OWNER, and the supplier shall afford access for this purpose, if so required.

3.02 CERTIFICATION

Prior to installation of any of the above mentioned units, the Contractor shall furnished the Engineer, upon his required, with a statement giving the following information:

A. Name of manufacturer.

B. The source and type of cement.

C. The source and specific gravities of the aggregates.

D. The concrete mix proportions, and strength at 28 days.

E. Name of admixtures, if any.

F. Mill certificates for the reinforcement steel.

G. Source of water.

3.03 REJECTION

The Precast units shall be subject to reject, either at the manufacturing plant or at delivery, upon failure to conform to any of the specified requirements herein. The following imperfections shall also be cause for rejection:

A. Defects that indicate any imperfect concrete mixing and molding.

B. Surface defects such as honey-combed or open textured and damaged area which would affect the structural adequacy.

C. Repaired areas or capping.

D. Improper radius at corners or improper tolerances.

END OF SECTION

SECTION UC-085

WATER METER VALVES

PART 1 - GENERAL

1.01 SCOPE

This Contractor shall furnish meter valve and accessories for cold water displacement meters (to be furnished and installed by the OWNER/MDWASD) and shall supply all labor, material and equipment necessary for a satisfactory installation.

1.02 RELATED SECTION

Section UC-080 - Meter Boxes, Sectional Plates and Vaults for Water Service

PART 2 - PRODUCTS

2.01 METER VALVE ASSEMBLY

A. Meter valves (inlet side of meter) for single meter box installations, including single meter boxes for multi-story buildings, shall be the lock wing type with coupling nut drilled for wire seal. The inlet end of the valve shall be for 1-inch copper tubing as specified herein, and the outlet end (coupling nut) shall connect to a 1-inch meter. The valves shall be as manufactured by the following or an approved equal:

Ford Meter Box. - Angle Inverted Key Meter Valves, No. KV23-444W

or

Mueller Co. - Angle Meter Stop, No. H-14255

B. Meter valves (outlet side of meter) for single meter boxes (multi-story building) shall be the plain type with coupling nut drilled for wire seal. The inlet end of the valves (coupling nut) shall be for 1-inch copper tubing as specified herein, and the outlet end shall connect to a 1-inch meter. The valves shall be as manufactured by the following or approved equal:

Ford Meter Box. - Straight Inverted Key Meter Valves, No. KV23-444W

or

Mueller Co. - Straight Inverted Key Meter Valves, No. H-14348

C. Meter branch valve assemblies (inlet side of meter) with standard 7-1/2 inch spacing for dual meter boxes (two 5/8-inch water meters) shall be lock-wing types with coupling nuts drilled for wire seal. The inlet side of the branch valve assembly shall be for 1-inch copper tubing as specified herein, and the outlet side (coupling nut) shall connect to a 5/8-inch by 3/4-inch meter. The branch valve assembly shall be as manufactured by the following or an approved equal:

Ford Meter Box. - Branch Valve Assemblies, No. UV23-42WW

or

Mueller Co. - "U" branch connection No. H-15362 with 7-1/2 inch spacing, 3/4 I.P. male thread (outlet) and inlet for 1-inch copper tubing

and

Angle meter stops No. H-14265 with 3/4-inch I.P. female thread (inlet), and coupling nut (outlet) for 5/8-inch by 3/4-inch meter and drilled for wire seal.

PART 3 - EXECUTION

(Not Used)

END OF SECTION

SECTION UC-170

CLEANING AND TESTING OF MAIN

PART 1 - GENERAL

1.01 SCOPE OF WORK

A. The Contractor shall furnish all material, labor and equipment necessary to clean and test force main and/or water main.

B. The material herein specifies cleaning and testing of mains 24-inches in diameter and less unless otherwise allowed by the OWNER.

1.02 RELATED SECTION

Section UC-175 - Disinfection of Main
Section UC-370 - Cleaning and Testing Gravity Sewers

1.03 QUALITY ASSURANCE

A. Testing shall be in accordance with ANSI/AWWA Standard C-600, latest edition, as modified herein.

B. Cleaning and testing shall be performed in strict accordance with these specifications.

C. The Contractor is cautioned that Miami-Dade County or other governing body having jurisdiction over the work location may have regulatory rules and ordinances prohibiting or limiting the discharge of water from any excavation into sanitary and storm sewer systems, or to canals and drainage ditches. The Contractor shall comply with all regulations of all governing agencies.

PART 2 - PRODUCTS

(Not Used)

PART 3 - EXECUTION

3.01 GENERAL

A. As soon as the installation of each run of main is completed, including valves sufficient for control and anchored sufficiently to withstand any test pressure, the run shall be thoroughly cleaned by pigging (or, if required by the OWNER, flushing), discharging the water through a riser into the pipe trench, unless some other method of disposal is approved by the OWNER. Note that in some circumstances it may be necessary to install valves after the line segment has been pigged. In such in instance, permission to use this sequence of operations must be approved in writing by the OWNER.

B. THE Contractor shall clean the inside of the main in intervals during its installation. The Contractor shall utilize pigging to clean the main unless otherwise specified herein or instructed by the OWNER. A Bare Swab No. 5, density 1 lb./ft.^{3} by Knapp Polly Pig, Inc. 1209 Hardy Street, Houston, Texas 77020, 1-800-231-7205, or approved equal, shall be utilized for this work. Any damage to the pipe lining caused by pigging shall be repaired or replaced to the satisfaction of the OWNER at the Contractor's sole expense. The Contractor shall furnish all materials and equipment necessary to clean the mains.

C. Volume flushing, if required, shall be of sufficient velocity to produce a scouring action in the main meeting the approval the OWNER.

D. The Contractor shall furnish and install all piping necessary to dispose of the flushing water and shall exercise care to prevent any damage to the surrounding area and adjoining and adjacent properties.

E. Water Main: Mains shall be tested as a whole or in sections between line valves, unless otherwise specified or approved by the OWNER. Unless otherwise approved by the OWNER, the total length of pipe for any single test shall not exceed 2,000 feet. Where a segment is being tested which includes more than one line valve to line valve section the maximum allowable leakage, defined below, shall be based on the length of the small segment being tested. All offset connections, fire hydrants, fire hydrant branch mains, and services between line valves shall be tested with the water main.

F. Force Main: The force main shall be tested in a manner identical to the water main test specified above. Offset connections and blow offs will be tested along with the main. Corporation stops shall be installed prior to testing and shall be included in the test with no leak permitted.

3.02 WATER FOR CLEANING AND TESTING

A. Water for cleaning and testing shall be furnished as specified in "Water Used in Construction" of Section 01100. The Contractor shall furnish and install all necessary pumps, piping and fittings, including the corporation stop(s), to connect the section under test to the source of water. The test pump shall be a centrifugal or gear pump producing a steady pressure free of pulsation. The OWNER/MD-WASD may furnish a suitable meter or container for measuring the flow of water into the line, if available and requested by the Contractor in a timely manner, but will not be considered as obliged to do so. If the meter is not furnished by the OWNER/MD-WASD, a meter or container, calibrated to the satisfaction of the OWNER shall be provided by the Contractor. A Contractor-supplied meter or container must be approved in writing by the OWNER. The test pressure shall be 100 psi and, as specified in AWWA C600, Section 5.2 "Hydrostatic Testing", shall not vary more than ± 5 psi for the duration of the testing.

3.03 LEAKAGE TESTING

A. Force Main: All corporation stops and blow offs in the section being tested shall be opened and left open until water comes out of them, in order that as much air as possible may be removed from the line.

B. Water Main: All fire hydrants, corporation stops, air release valves and meter valves in the section being tested shall be opened and left open until water comes out of them, in order that as much air as possible may be removed from the line.

C. Water shall be pumped into the line from a OWNER approved calibrated container or through a OWNER approved meter up to the required pressure, and pumping shall be continued to maintain that pressure for a minimum period of 2 hours, or such longer period as the Inspector requires to inspect the line for leaks. Leakage shall be defined as the quantity of water that must be supplied into the newly laid pipe, or any isolated section thereof, to maintain the specified leakage test pressure after the air in the pipeline has been expelled and the pipe has been filled with water.

D. The inspector will record the amount of water supplied to the pipeline at the end of the first hour of the test and at each hour thereafter for the full duration of the test. Should the amount of leakage (ie water supplied to the pipe) recorded for any hour exceed the amount recorded for any previous hour, even if the amount of leakage is less than the allowable amount, the test shall continue for additional one-hour periods until the leakage stabilizes or decreases.

E. The maximum allowable leakage for ductile iron mains shall be determined by the following formula from the ANSI/AWWA Standard C600-05 "Installation of Ductile-Iron Water Mains and Their Appurtenances", latest edition:

$$L = \frac{SD \text{ times the square root of } P}{148{,}000}$$

where: L is the allowable leakage in gallons per hour; S is the length of pipeline tested in feet; D is the nominal diameter of the pipe in inches; and P is the average test pressure during the leakage test, in pounds per square inch gage.

Note: For force mains, also see "Tightness Standards" in Section UC-370, as applicable.

E. No pipe installation will be accepted if the leakage is greater than that determined by the above requirements.

F. The Contractor shall locate and repair all leaks until the leakage is reduced to the limits specified. The Contractor may use the leak detector belonging to the OWNER but shall reimburse the OWNER for the actual cost of the operation of the instrument by OWNER personnel. Any observed leaks or any obviously defective joints or pipes shall be repaired or replaced as directed by the OWNER, even though the total leakage is below that specified above. The tests and repairs shall be continued or repeated until the Engineer is assured that the leakage from the section of line under test is less than the amount specified.

END OF SECTION

THIS PAGE LEFT INTENTIONALLY BLANK

SECTION UC-175

DISINFECTION OF WATER MAIN

PART 1 - GENERAL

1.01 SCOPE OF WORK

The Contractor shall furnish the necessary labor, equipment, and material to disinfect sections of water main and fittings as applicable to this project.

1.02 RELATED SECTION

Section UC-170 - Cleaning and Testing of Main

1.03 QUALITY ASSURANCE

A. Disinfection shall be performed in strict accordance with these specifications and with AWWA Standard C651, "Disinfection of Water Mains", latest edition, except as otherwise modified herein.

PART 2 - PRODUCTS

2.01 Liquid Chlorine, available from local sources.

2.02 Calcium hypochlorite, HTH, Perchloron, or approved equal.

PART 3 - EXECUTION

3.01 GENERAL

A. The Contractor shall clean, flush and disinfect every piece of pipe, fitting and valve in accordance with these specifications and to the satisfaction of the OWNER.

B. Liquid chlorine is available locally and shall be purchased by the Contractor.

3.02 DISINFECTION

A. The pipelines shall be disinfected after they have been pressure tested and while still full of water, as specified in Section UC-170.

B. A suitable chlorinator shall be used to inject chlorine into the lines. All connections required for the introduction of chlorine into the water lines shall be made by the Contractor. Chlorine and water shall be introduced at one end and shall be allowed to flow slowly through the lines to the other end where it shall be removed and disposed of at the Contractor's expense. Several points of introduction and removal of chlorine solution may have to be employed to get an even distribution through the entire section being disinfected.

C. The quantity of chlorine introduced shall be such as to insure a concentration of at least 50 parts per million in the water flowing from the line.

D. The chlorine solution shall be allowed to stand in the line for at least 24 hours or longer, if required, to destroy all harmful bacteria. At the end of the required time, the concentration of chlorine in all parts of the section shall be at least 25 ppm.

E. All valves and appurtenances in the section shall be operated at least once during the above period. After the required period, the treated water shall be thoroughly flushed from the section and the system filled with potable water.

F. The Contractor shall be responsible for coordination with Dade County Department of Health, who shall collect and test samples from main. The Contractor shall provide assistance to the Dept. of Health for the collection of samples. The samples shall be taken from each main or section of main to be placed in service where designated by the Dept. of Health. The samples must be approved by the Department of Health before the main is placed in service.

G. The Contractor shall be responsible for any rechlorination and retesting that may be required until the Department of Health's approval is obtained. The Contractor shall be responsible for the disposal of all water flushed from the system and shall safeguard all adjoining properties from damage from flooding. The Contractor shall exercise due care in the protection of private property from water damage due to his operations. In addition, the Contractor shall assume complete liability for any damage which was directly or in-directly caused by his operations.

H. All of the connections shall be disinfected by the Contractor.

I. The inside of each pipe and fitting laid by the Contractor in connecting to existing mains which are isolated from the main line by valves shall be swabbed with calcium hypochlorite, HTH, Perchloron, or approved equal, mixed in solution with water. The quantity of hypochlorite shall in all cases be subject to the approval of the OWNER, whose representative shall be present at all times while this phase of the work is in progress.

J. Wherever practicable, water from the existing mains flowing through the disinfected connections shall be used in disinfecting the main line in order that the hypochlorite may be removed to the greatest extent possible. In other cases, the water from the disinfected connections shall be removed by allowing it to flow into the main line as it is being drained.

END OF SECTION

SECTION 01005

DEFINED TERMS

PART 1 - GENERAL

1.01 SCOPE

When used in this publication the following underlined terms shall have meaning as hereinafter defined:

A. The masculine pronoun shall include the feminine and neuter, and the singular shall include the plural;

B. "And" shall also mean "or" and "or" shall also mean "and", wherever the context or purpose so requires;

C. “As-Built Drawings” As-built drawings are prepared by the Contractor’s Florida Registered Professional Surveyor and Mapper. As-built drawings reflect field changes and construction modifications to the conformed Bid Documents.

D. “Construction Drawings” shall mean the drawings, plans, or reproduction thereof which shows scope, character, location, dimensions, and other details of the Work to be performed under the Contract Documents.

E. “Contract Documents” shall mean those documents named in the Agreement.

F. "Contractor” , “Bidder” shall mean the party of the second part to the contract. The person, firm, or corporation, holding a current Certificate of Competency applicable to the type of work to be performed, with whom a contract has been made directly or through accredited representatives, that may have entered into a contract with the OWNER/CITY OF OPA-LOCKA and who is primarily liable for the acceptable performance of the work for which he has contracted and also for the payment of all legal debts pertaining to the work, or Contractor shall mean any person engaged by the OWNER/CITY OF OPA-LOCKA to supply labor, materials or equipment for use in the fulfillment of the project.

G. "OWNER", or "City of Opa-Locka" shall mean City of Opa-Locka, Florida, a political subdivision of the State of Florida, acting by and through the Board of City Commissioners, which is a party hereto and for which this Contract is to be performed;

H. "Directed" shall mean a command or instruction by Engineer or the OWNER. Other terms including "requested", "ordered", "authorized", "selected", "required", and "permitted" have the same meaning as "directed".

I. "Domestic" when applied to materials, shall mean materials or products produced within the continental limits of the United States.

J. "Engineer of Record" or "Engineer" shall mean the Florida-certified professional engineer engaged by the OWNER to design (sign and seal) the proposed Project.

K. "Equal" or "Approved Equal" shall mean only that material or product which is specifically approved by the Engineer as being an acceptable substitute for a material or product designated in the Specifications or by a trade name or the name of the manufacturer.

L. "Final Completion" shall occur when the work is in a state such that no further work is required in accordance with the Contract Documents to render complete, satisfactory and acceptable to OWNER all construction services purchased, including those for any pending items whether or not they were listed after substantial completion, and provide all manuals, certifications, warrantees, as-built Plans, release of liens, certified payrolls, and any other documentation required by OWNER or other governing authority. If any portion of the Contract Documents specifies a particular measure of final completion for the work, in whole or in part, that definition shall take precedence of this section.

M. "Inspector", "Construction Manager" shall mean any person designated by the OWNER as an authorized representative to examine and inspect materials and work for insuring compliance by the Contractor with all requirements of the Plans and Specifications, the Construction Managers and Inspectors which work at the direction of the Construction Manager are authorized representatives of the OWNER;

N. "Person" shall mean and include any individual, combination of individuals, partnership, society, association, joint stock company, corporation, estate, receiver, trustee, assignee, referee or any other person acting in a fiduciary or representative capacity, whether appointed by a court or otherwise;

O. "Plans" shall mean construction drawings prepared by the Consultant (H.W. Lochner, Inc.) or Engineer of Record for the proposed Project.

P. "Project" shall mean and include all construction, for which the Contractor is responsible under the Contract Documents, or shall mean and include all construction for which the Consultant or Engineer of Record is responsible under the agreement with the OWNER.

Q. "Provide" shall mean to furnish and install, complete and ready for the intended use.

R. "Regulations" shall mean laws, ordinances, statutes, and lawful orders issued by authorities having jurisdiction, and rules, conventions, and agreements within the construction industry that control performance of the Work.

S. "Standards Details" or "Standards" the MDWASD's latest published standard construction details, copies of which are bound herein.

T. "Subcontractor" shall mean any person engaged by the Contractor to supply labor, materials or equipment for use in the fulfillment of the Project;

U. "Substantial Completion" shall occur when the work is in a state of final completion as regards all aspects of occupancy, ingress, egress, habitability, functionality and efficiency thereof, safety, durability and interaction with other existing or contemplated systems, and is otherwise substantially fit for use or operation. Any work remaining after substantial completion shall be of a minor nature such that should the OWNER elect to occupy and put into full service the facility constructed under the Project, or any portion thereof, said work may be accomplished without interference to an extent causing loss of efficiency to any of the above required aspects. The date of substantial completion is the date certified by the Architect/Engineer and approved by OWNER (if different from the A/E) when construction is sufficiently complete to satisfactorily fulfill all of the above requirements. If any portion of the Contract Documents specifies a particular measure of substantial completion for the work, in whole or in part, that definition shall take precedence of this section.

V. "Surveyor" shall mean a professional surveyor registered in the State of Florida to engage in the practice of surveying.

AA. "Water level" or "water table" shall mean the top elevation of the natural ground water table as it exists in the trench at any particular site and time during the installation.

BB. "Work" shall mean all labor, permits, bonds, equipment, materials and incidentals required for the construction of the improvements by the Contract Documents, including superintendence, use of equipment and tools, and all services and responsibilities prescribed or implied, which are necessary for the complete performance by the Contractor of his obligations under the Contract Documents. Unless otherwise specified herein or in the Contract Documents, all costs of liability and of performing the Work shall be at the Contractor's expense.

PART 2 - PRODUCTS

(Not Used)

PART 3 - EXECUTION

(Not Used)

END OF SECTION

SECTION 01010

SUMMARY OF WORK

PART 1 - GENERAL

1.01 DESCRIPTION

A. This section includes general descriptions of the Contractor use of site, location of work, description of work, work sequence, owner occupancy and work by others.

B. This Section describes the project in general, and provides an overview of the extent of the work to be performed under this Contract. Detailed requirements and extent of work is stated in the applicable Specification sections and shown on the Plans. The Contractor shall, except as otherwise specifically stated herein or in any applicable parts of the Contract Documents, provide and pay for all labor, materials, equipment, tools, construction equipment, and other facilities and services necessary for proper execution, testing, and completion of the work under this Contract.

C. The Specifications included in these Contract Documents establish the minimum performance and quality requirements for materials and equipment with the minimum standards for quality of the workmanship and appearance. Generally, there has been no attempt to separate the Specification sections into groups for the work of separate subcontractors, or for work to be performed by the various trades. Should there be any question as to the interpretation of any particular Specification section or part of Specification section, such question should be directed to the OWNER prior to the submittal of a proposal for the work under this Contract.

D. The work shown on the Plans is intended to be comprehensive and descriptive, not an exact and complete representation of the actual finished work. Installed work shall include fittings, joints, supports, nuts, bolts, and all other accessories required to provide complete and satisfactory systems as specified, even though some items may not be specifically shown on the Plans.

E. It is the intent of OWNER to obtain a complete functional, satisfactory and legally operable installation under this project, and any items of labor, equipment or materials which may be reasonably assumed as necessary to accomplish this end shall be supplied whether or not they are specifically shown on the Plans or stated herein. The Contractor shall provide all materials for the project unless they are specifically called out in these specifications as being supplied by the OWNER. The Contractor shall also supply all other labor, material or equipment required to preclude damage to or loss of functionality of any existing facility or system.

F. No request for additional compensation or Contract time (except for a non-compensable item extension at the sole discretion of the OWNER, whose decision shall be final) resulting from encountering utilities or structures not shown, or differing in location or elevation from that shown, will be considered. The Contractor shall explore sufficiently ahead of the Work to allow time for any necessary adjustments without delay to the progress of the installation. Cost due to

delays occasioned by encountering utilities or structures which could have or should have been discovered by timely exploration ahead of the work shall rest solely with the Contractor.

1.02 RELATED SECTIONS

A. Section 01015 – General Requirements

B. Section 01025 – Measurement and Payment

C. Section 01100 – Special Project Procedures

D. Other Sections as applicable.

1.03 REFERENCES (NOT USED)

1.04 CONTRACTOR USE OF SITE

A. The Contractor shall limit his area of work to remain within those properties and easements as depicted in the Drawings or as approved in writing by the Owner.

B. Contractors use of lands other than those depicted in the Drawings shall require written approval from the land owner and be at the Contractors risk and cost.

1.05 LOCATION OF WORK

A. The work is located within portions of right of way of following roadways/streets and adjacent properties in the City of Miami Gardens and Miami-Dade County, Florida:

NW 151st St

NW 32nd Ave

NW 32nd Ct

NW32nd Pl

NW 33rd Ave

NW 33rd Ct

NE 33rd PL

NW 34th Ave

NW 151st Ter

NW 153rd St

NE 154th Ter

Residential Lots

1.06 DESCRIPTION OF WORK

The following is a general list of the work included. It is not intended to be complete. Consult the contract drawings and specifications for all contract requirements. It is the intent of the OWNER to obtain a complete and working installation under this Project and any items of labor, equipment or materials which may reasonably be assumed as necessary to accomplish this end shall be supplied whether or not they are specifically shown on the Plans or stated herein

1. Mobilization and demobilization
2. Maintenance of Traffic
3. Erosion and Sediment Control
4. Clearing/Grubbing, Demolition
5. Abandonment/Removal of Asbestos Cement Pipe
6. Trench excavation and restoration
7. Potable water systems/infrastructure/Water Main extension/Water distribution system
8. Roadway/Pavement Restoration
9. Site restoration including sod, swale, pavement marking/signage, fencing, driveways etc.

1.07 WORK SEQUENCE

The following is a general suggested work sequence. It is not intended to be complete. The contractor shall submit his/her's own construction sequence, schedule for Owner approval prior to pre-construction meeting. Contractor shall perform his/her's own due diligence for construction feasibility and work sequence prior to bidding. No additional cost other than the bid contract amount will be allowed for construction means, methods, and work sequence. Consult the contract drawings and specifications for all contract requirements.

A. Measures for Stormwater Pollution Prevention

B. Establish Temporary Traffic Control Plans for Maintenance of Traffic

C. Demolition per contract plans and specifications. Water services to existing residential and commercial customers shall be maintained unless otherwise noted. Existing fire hydrants shall be in service until new fire hydrants are constructed and active.

D. Construct new water mains and services, Fire Hydrants.

E. Site restoration.

1.08 OWNER OCCUPANCY

A. Cooperate with OWNER to minimize conflict, and to facilitate Residences, Businesses, and Owner's operations.

B. Schedule the Work to accommodate this requirement.

1.09 WORK BY OTHERS

A. The Contractor is advised that work by others may take place during the duration of the contract time. It shall be the Contractor's responsibility to coordinate and schedule all Work as not to delay or hinder his work or the work by others.

PART 2 - PRODUCTS (NOT USED)

PART 3 - EXECUTION (NOT USED)

END OF SECTION

SECTION 01011

SITE CONDITIONS

PART 1 GENERAL

1.01 SITE INVESTIGATION AND REPRESENTATION

A. The Contractor acknowledges that he has satisfied himself as to the nature and location of the work, the general and local conditions, particularly those bearing upon availability of transportation; disposal, handling and storage of materials; availability of labor, water, electric power, roads; disposal of water from construction; uncertainties of weather; the conformation and conditions at the ground; the type of equipment and facilities needed preliminary to and during the prosecution of the work and all other matters which can in any way affect the work or the cost thereof under this Contract.

B. The Contractor further acknowledges that he has satisfied himself as to the character, quality, and quantity of surface and subsurface materials to be encountered from inspecting the site and from evaluating information derived from exploratory work that may have been done by OWNER or included with these Contract Documents. Any failure by the Contractor to acquaint himself with all the available information will not relieve him from responsibility for properly estimating the difficulty or cost thereof under this Contract.

C. The Contractor acknowledges that by personal field observation or other means satisfactory to himself, performed prior to the bid, he has included in the prices bid all costs for dealing with all construction problems created by observable above or on grade features on or adjacent to the site of the work whether these features are shown on the Plans or described in the Specifications. In instances where the observable features indicate subsurface conditions which may affect the Project work, as for example, a pavement patch or catch basin gratings indicating respectively a utility or storm sewer not shown on the Plans, the Contractor acknowledges that he has made timely, diligent, inquiry of the Engineer or by other means fully satisfied himself prior to the bid as to the nature of, and costs created by, the subsurface condition and included all costs therefore in the prices bid.

1.02 INFORMATION ON SITE CONDITIONS

A. All information obtained by OWNER regarding the site conditions, topography, subsurface information, ground water elevations, existing construction of site facilities as applicable, and similar data will be made available to the Contractor in the Contract Documents. Such information is offered as supplementary information only. Neither the Engineer nor OWNER assumes any responsibility for the completeness or for the Contractor's interpretation of such supplementary information. Prior to bidding and after written approval from OWNER, bidder

may make his own survey investigations to satisfy himself with site conditions at his own cost.

B. Subsurface investigations, including test borings, have not been made to indicate subsurface conditions at locations in the Project.

C. Prospective bidders are advised, at their own expense, to make such subsurface investigation, by boring or test hole excavation, as may be desirable. However, such work is to be scheduled by appointment with the Engineer if on a OWNER site or by notification to City of Miami Gardens, City of Opa-Locka, Miami-Dade County and properly permitted if in the public right of way.

1.03 DIFFERING SUBSURFACE CONDITIONS

A. In the event subsurface or latent physical conditions are found materially different from those indicated in these Documents, and differing materially from those ordinarily encountered and generally recognized as inherent in the character of work covered in these Contract Documents, promptly, and before such conditions are disturbed, notify the Engineer in writing of such changed conditions.

B. The Engineer will investigate such conditions promptly and following this investigation, the Contractor shall proceed with the work, unless otherwise instructed by the Engineer. If the Engineer finds that such conditions do so materially differ as to cause an increase or decrease in cost and time considered reasonable by the Engineer, OWNER will make the final decision regarding any adjustment in cost or time for completion.

C. In the event that site conditions differ from those expected by the Contractor, the Contractor shall proceed to complete the work as contemplated by the Plans and Specifications at his own cost and expense. If in the discretion of the Engineer, the difference in site conditions renders completion of the work as described by the Plans and Specifications impossible, the Engineer may alter the work, whereupon the Contractor shall be compensated for any extra work in accordance with General Covenants and Conditions; the Engineer shall not alter the work where the site conditions render the work more difficult or costly to perform, if such work is otherwise still possible as described in the Contract Documents.

1.04 EXISTING UTILITIES AND LOCATION SERVICES

A. Known utilities and structures adjacent to or encountered in the work are shown on the Plans. The locations shown are taken from existing records and the best information available from existing plans. However, it is expected that there may be some discrepancies and omissions in the locations and quantities of utilities and structures shown. Those shown are for the convenience of the Contractor only, and no responsibility is assumed by either OWNER or the Engineer for their accuracy or completeness. **No request for additional compensation or**

Contract time (except for a non-compensable time extension at the sole discretion of the Engineer, whose decision shall be final) resulting from encountering utilities or structures not shown, or differing in location or elevation from that shown, will be considered. The Contractor shall explore sufficiently ahead of the work to allow time for any necessary adjustments without delay to the progress of the installation. Costs due to delays occasioned by encountering underground utilities or structures which could have or should have been discovered by timely exploration ahead of the Work shall rest solely with the Contractor.

B. Prior to proceeding with excavation the Contractor shall contact all utility companies and all other users of the right-of-way in the area to aid in locating their underground services. It shall be the Contractor's responsibility to contact utility companies at least three Normal Working Days before starting construction. The Contractor shall proceed with caution in the excavation and preparation so that the exact location of underground utilities may be determined. The Contractor shall comply with Chapter 556, F.S. "Underground Facility Damage Prevention and Safety Act", Chapter 553, F.S. "Florida Trench Safety Act, Part IV", Chapter 368, F.S., "Florida Gas Safety Law, Part 1, and OSHA Standard 1926.651.

C. It is the responsibility of the Contractor to ensure that all utility or other existing facilities, the stability of which may be endangered by the close proximity of excavation, are temporarily held in position while work proceeds in the vicinity of the facilities and that the utility or other companies concerned be given reasonable advance notice of any such excavation by the Contractor.

D. The Contractor shall take all reasonable precautions against damage to existing utilities. However, in the event of a break in an existing water main, gas main, sewer or underground cable, the Contractor shall immediately notify the responsible official of the organization operating the interrupted utility. The Contractor shall lend all possible assistance in restoring services and shall assume all cost, charges, or claims connected with the interruption and repair of such services, as determined by the OWNER.

1.07 CONTRACTOR'S RESPONSIBILITY FOR UTILITY PROPERTIES AND SERVICE

A. Where the Contractor's operation could cause damage or inconvenience to railway, telephone, fiber optic, television, electrical power, oil, gas, water, sewer, irrigation system, or any other utility, the Contractor shall make all arrangements necessary for the protection of these utilities and services.

B. Notify all utility companies that are affected by the construction operation at least 48 hours in advance. Under no circumstance expose any utility without first obtaining permission from the appropriate agency. Once permission has been granted, locate, expose, and provide temporary support for all existing underground utilities and utility poles where necessary. **Absolutely no extra compensation will be allowed for construction problems created by utility**

poles of whatever size, overhead electric, telephone or other lines, whether shown on the Plans or not. The Contractor is solely responsible for discerning such items in the field prior to bidding and including all costs for such work in the prices bid.

C. The Contractor and his subcontractors shall be solely and directly responsible to the owners and operators of such properties for any damage, injury, expense, loss, inconvenience, delay, suits, actions, or claims of any character brought because of any injuries or damage which may result from the construction operations under this Contract.

D. Neither OWNER nor its officers or agents shall be responsible to the Contractor for damages as a result of the Contractor's failure to protect utilities encountered in the work.

E. In the event of interruption to domestic water, sewer, storm drain, or other utility services as a result of accidental breakage due to construction operations, promptly notify the proper authority. Cooperate with said authority in restoration of service as promptly as possible and bear all costs of repair. In no event shall interruption of any utility service be allowed unless granted by the owner of the utility. In the event water service lines that interfere with trenching are encountered, the Contractor may, by obtaining prior approval of the water utility, cut the service, dig through, and restore the service with similar and equal materials at the Contractor's expense and as approved by the Engineer.

G. Replace, with material approved by the Engineer, at Contractor's expense, any and all other laterals, existing utilities or structures removed or damaged during construction, unless otherwise provided for in these Contract Documents and as approved by the Engineer.

1.08 INTERFERING STRUCTURES

A. Take necessary precautions to prevent damage to existing structures whether on the surface, above ground, or underground. An attempt has been made to show major structures on the Plans. While the information has been compiled from the best available sources, its completeness and accuracy cannot be guaranteed, and is presented as a guide. The Contractor is solely responsible for field verification of all locations.

1.9 FIELD RELOCATION

A. During the process of construction, it is expected that minor relocations of the work may be necessary. Such relocations shall be made only by the direction of the Engineer at the Contractor’s expense. If existing structures are encountered that will prevent construction as shown, notify the Engineer before continuing with the work in order that the Engineer may make such field revisions as necessary to avoid conflict with the existing structures. If the Contractor fails to notify the

Engineer when an existing structure is encountered, and shall proceed with the work despite this interference, the Contractor does so at his own risk.

B. Representatives of utility companies, the railroad companies, the traffic and transportation authorities, etc., shall be notified in accordance with the provisions set forth in the relevant sections of the Specifications and the permitting documents.

PART 2 PRODUCTS

NOT USED

PART 3 EXECUTION

NOT USED

END OF SECTION

THIS PAGE LEFT INTENTIONALLY BLANK

SECTION 01015

GENERAL REQUIREMENTS

PART 1 - GENERAL

1.01 DESCRIPTION

A. This Section provides for miscellaneous provisions applicable to the Work.

B. All work specified in this Section will not be paid for directly, but will be considered as incidental work.

1.02 RELATED SECTIONS

A. Section 01100 – Special Project Procedures

B. Section 01310 – Construction Schedules

C. Section 01340 – Shop Drawings, Product Data, and Samples

D. Section 01720 – Project Record Documents

E. Section 01725-Project As-Built/Record Drawings

F. Other Sections as applicable.

1.03 REFERENCES

A. Reference to standards, specifications, manuals, or codes of any technical society, organization, or association, or to Laws or Regulations, whether such reference be specific or by implication, shall mean the standard, specification, manual, code, or Laws or Regulations in effect at the time of opening of Bids (or on the Effective Date of the Agreement if there were no Bids), except as may be otherwise specifically stated in the Contract Documents.

1.04 SAFETY

A. All work shall be done in a safe manner and in strict compliance with all requirements of the Federal Occupational Safety and Health Act (OSHA), The Florida Trench Safety Act and all other State and local safety and health regulations.

1.05 APPLICABLE CODES

A. The Contractor shall comply with the applicable standards codes and specifications governing the Contract Documents whether City, County, State or Federal. The Contractor is obligated to notify the Owner and Engineer of any deficiency contained in the Contract Documents immediately upon discovery. Where conflicts exist in such, the more stringent shall govern.

1.06 APPLICABLE PERMITS AND LICENSES

A. The Contractor shall abide by all permit conditions, whether, general, specific, limited or otherwise. A copy of all applicable permits and licenses, with the exception of City permits obtained by the Contractor, are attached hereto and made a part of the Contract Documents. See 1.07 B for all required contractor obtained permits and licenses.

1.07 PUBLIC BID DISCLOSURE ACT 218.80 FS

A. All the local governmental entity permits or fees are to be disclosed, including, but not limited to, all license fees, permit fees, impact fees, or inspection fees, payable by the contractor to the unit of government that issued the bidding documents or other governmental agency,

B. The following permits are required for this project: City of Opa-Locka Public Works/Building Permits, City of Miami Gardens Public Works/Building Permits, Miami-Dade County Health Department Permits, Florida Department of Environmental Protection (FDEP) Permits, Miami-Dade County Public Works Permits, Miami-Dade County Fire Department Permits. In addition, SFWMD Dewatering permit, Miami-Dade County Dewatering permit shall be required as applicable. The cost for these permits is accounted for in the Permitting Allowance of found in the Bid Form.

PART 2 - PRODUCTS (NOT USED)

PART 3 - EXECUTION

3.01 PRE-CONSTRUCTION RESPONSIBILITIES

A. Upon receipt of the Notice To Proceed, the Contractor shall arrange for a Pre-Construction meeting. The meeting shall be held with a minimum of one weeks' notice and shall include the Engineer, the Owner and Representatives for all affected utility companies, City of Miami Gardens.

3.02 TEMPORARY UTILITIES

A. The Contractor shall be responsible to arrange for and supply all temporary utilities including, but not limited to, water, sewer and electricity.

B. The cost of temporary utilities will be considered incidental to the cost of the Work. The work specified in this Section will not be paid for directly, but will be considered as incidental work.

3.03 UNDERGROUND LOCATING SERVICE

A. Prior to underground construction, the Contractor is required by the Underground Facility Damage Prevention and Safety Act, Chapter 556 FS to contact Sunshine 811, for the location of underground utilities.

3.04 ADVANCE INVESTIGATIONS

A. The Contractor shall be responsible for uncovering and exposing existing utilities sufficiently in advance of pipe laying operations to confirm elevation, size, material and clearance separation(s). If, upon excavation, an existing utility is found to be in conflict with the proposed construction or be of a size or material different from what is shown on the plans, the Contractor shall immediately notify the Engineer, who will in turn prepare a recommendation. Failure of the Contractor to perform advance investigations shall not relieve it of any claims for delay or damages.

3.05 PRESERVATION AND RESTORATION

A. Contractor shall be responsible for the preservation and protection of property adjacent to the work site against damage or injury as a result of his operations under this project. Any damage or injury occurring on account of any act, omission or neglect on the part of the Contractor shall be restored in a proper and satisfactory manner or replaced by and at the expense of the Contractor to an equal or superior condition than previously existed.

3.06 CONTRACTOR USE OF PREMISES

A. Contractor shall have limited use of the premises for construction operations, including limited use of the site. The Contractor's use of the premises is further limited to the Owner's right to perform construction operations with its own forces or to employ separate contractors on portions of the project.

B. The Contractor shall be responsible for coordinating his daily activities in conjunction with any Contractors presently working within the vicinity of this project.

C. Confine operations to areas within project areas shown on plans and easements.

D. Keep existing driveways and entrances serving the premises clear and available to the Owner, Residents and the Owner's employees at all times.

1. Do not use these areas for parking or storage of materials.

2. Schedule deliveries to minimize space and time requirements for storage of materials and equipment on site.

3.07 DISPOSAL

A. Do not dispose of any unsuitable fill, hazardous or organic material onsite. All such material shall be disposed of in a legal manner by the Contractor, the cost of which shall be included in the Bid.

3.08 ENVIRONMENTAL PROTECTION

A. Provide protection, operate temporary facilities and conduct construction in ways and by methods that comply with environmental regulations, and minimize the possibility that air, waterways and subsoil might be contaminated or polluted, or

that other undesirable effects might result.

3.09 MATERIAL AND EQUIPMENT

A. Substitutions: After Bidding period, up to 30 days after date of Notice to Proceed, the Engineer will consider written requests from Contractor for proposed substitutions of products. Subsequent requests will be considered only in case of product unavailability or other condition beyond control of the Contractor.

1. Do not order or install substitute products without written acceptance from the Engineer of Record.

2. Do not imply or indicate substitutions on shop drawings or product data submittals without a separate formal request.

3. Engineer will determine acceptability of substitution in accordance with plans and specifications.

4. Only one request for substitution for each product will be considered. If not accepted, Contractor shall provide specified product.

B. Product selection is governed by the Contract Documents and governing regulations, not by previous project experience.

1. Where a single or multiple products or manufacturers are named, provide one of the products indicated or submit a request for substitution for any product or manufacturer not named unless no substitution is permitted.

2. Where the Specifications only require compliance with performance requirements, an imposed code, standard or regulation, select a product that complies with the requirements, standards, codes or regulations specified.

3. Manufacturers named in a Specification section are those manufacturers considered capable of manufacturing products conforming to the specified requirements. The naming of a particular manufacturer does not imply acceptance or approval of just any standard product of that manufacturer.

3.10 ADJUSTMENT OF EXISTING UTILITIES

A. The Contractor shall raise or lower all manholes, valve boxes, etc. to finished grade. The cost of these adjustments will be considered incidental to the cost of the Work. The work specified in this Section will not be paid for directly, but will be considered as incidental work.

3.11 TREES AND LANDSCAPING WITHIN PROJECT LIMITS

A. General: The CONTRACTOR shall exercise all necessary precautions so as not to damage or destroy any trees or landscaping on the project site, and shall not trim or remove any trees or landscaping unless such trees or landscaping have been approved for trimming or removal by the jurisdictional agency or owner. All existing trees or landscaping which are damaged during construction shall be

replaced by the CONTRACTOR or a certified tree/landscaping company to the satisfaction of the owner.

B. Replacement: The CONTRACTOR shall immediately notify the jurisdictional agency or owner if any tree or landscaping is damaged by the CONTRACTOR's operations. If, in the opinion of the jurisdictional agency or owner, the damage is such that replacement is necessary, the CONTRACTOR shall replace the tree or landscaping at its own expense. The tree or landscaping shall be of a like size and variety as the tree or landscaping damaged, or, if of a smaller size, the CONTRACTOR shall pay any compensatory payment.

3.12 EXISTING IRRIGATION

A. All existing irrigation systems (if not shown on irrigation plans) within the area of the Work shall be restored to original condition or better and adjusted to finished grade. The cost of repairs and/or adjustment to existing irrigation will be considered incidental to the cost of the Work. The work specified in this Section will not be paid for directly, but will be considered as incidental work.

3.13 DEWATERING

A. In accordance with SFWMD criteria contained in 40E-2.061 F.A.C., a dewatering permit is not required provided the following provisions are met:

1. Maximum daily pumpage is less than 5 million gallons (MG) and a maximum total project pumpage of less than 100 MG over a one year period;

2. All discharge shall remain on the project site;

3. No dewatering shall occur to a depth below elevation 0.0 feet NGVD within 1,000 feet of saline water, except when dewatering water with a chloride concentration of greater than 1,000 milligrams per liter;

4. No dewatering shall occur within 100 feet of a wastewater treatment plant rapid-rate land application system permitted under Part IV of Chapter 62-610, F.A.C.;

5. No dewatering shall occur within 1,000 feet of a known landfill or contamination; and,

6. No dewatering shall occur within 1,000 feet of a freshwater wetland unless dewatering activities are completed within 60 days.

7. All dewatering operations are subject to the Permit Conditions in Section 5.0 of the SFWMD APPLICANT'S HANDBOOK FOR WATER USE PERMIT APPLICATIONS (07-16-2014), including responsibility for mitigating any harm that may occur as a result of the dewatering to existing legal uses, off-site land uses, or natural resources.

B. The Contractor shall apply for a dewatering permit through the SFWMD if any of the above conditions cannot be met.

C. Attention is drawn to the proximity of this project to potential contamination sites as recorded by Miami-Dade County. If the Contractor deems it necessary to dewater, the Contractor is required to obtain a dewatering permit from Miami-Dade County DERM and adhere to any required groundwater well monitoring, sampling, cofferdams, or any other applicable permit conditions. This is in addition to a dewatering permit, if required, by SFWMD.

D. The cost of dewatering permits and dewatering work will be considered incidental to the cost of the Work. The work specified in this Section will not be paid for directly, but will be considered as incidental work.

3.14 DEMOLITION

A. Limits of demolition which may be shown in the Contract Documents are general in nature. Actual limits of demolition shall be as determined by the field conditions in conformance with the requirements of the Work.

B. All sidewalks within the limits of construction which are not ADA compliant (cross-slopes which exceed 2% and/or running slopes which exceed 5% and/or changes in level of ¼" or greater) shall be demolished and reconstructed to meet these requirements.

C. When sidewalk tie-ins exist outside the limits of construction which are not ADA compliant, the contractor shall replace those sections as directed by the Owner.

END OF SECTION

SECTION 01016

SAFETY REQUIREMENTS AND PROTECTION OF PROPERTY

PART 1 GENERAL

1.01 CONTRACTOR'S RESPONSIBILITY FOR SAFETY

A. Conduct whatever work is necessary for safety and be solely and completely responsible for conditions of the job site, including safety of all persons (including employees) and property during the Contract period. This requirement shall apply continuously and not be limited to normal working hours.

B. Neither the Professional activities of the Design Professional, nor the presence of the Design Professional nor his or her employees and subconsultants at a construction site, shall relieve the Contractor and any other entity of their obligations, duties and responsibilities including but not limited to, construction means, methods, sequence techniques or procedures necessary for performing, superintending, or coordinating all portions of the Work of construction in accordance with the Project Documents and any health and safety precautions required by any regulatory agencies.

1.02 MANDATORY SAFETY TRAINING AT WATER AND SEWER TREATMENT PLANTS

A. If required by OWNER, the Contractor shall coordinate with the Construction Manager and thereafter the Water and Sewer Department Safety Office to arrange for a mandatory (PSM) Project Safety Management training for all his personnel who will be on site. This training must be completed prior to mobilization or any other work on site. The Contractor shall also be responsible that all on-site personnel of his subcontractors, at whatever tier, receive this training. The training normally takes about 2 to 3 hours and is held at the project site.

1.03 FEDERAL, STATE, AND LOCAL SAFETY REQUIREMENTS

A. Safety provisions shall conform to the Federal and State Departments of Labor Occupational Safety and Health Act (OSHA), and all other applicable Federal, State, County, and local laws, ordinances, codes, the requirements set forth herein, and any regulations that may be specified in other parts of these Project Documents. Where any of these are in conflict, the more stringent requirements shall be followed. Contractor's failure to thoroughly familiarize himself with the aforementioned safety provisions shall not relieve him from compliance with the obligations and penalties set forth therein.

B. All open excavations made in the earth shall be performed in compliance with the State of Florida Trench Safety Act, OSHA 29 CFR 1926 Subpart P (Chapter 90-96, Laws of Florida). The Contractor shall appoint a "competent person", in

accordance with Subpart P, who shall be present at the jobsite. A "competent person" shall mean one who is capable of identifying existing and predictable hazards in the surroundings, or working conditions which are unsanitary, hazardous, or dangerous to employees, and who has authorization to take prompt corrective measures to eliminate them.

C. The Contractor shall familiarize himself with the "Underground Facility Damage Prevention and Safety Act", Florida Statute 556. The Contractor shall contact the Sunshine 811, at 1-800-432-4770, (or by submitting an internet ticket entry via www.sunshine811.com) at least forty-eight hours prior to any excavation. Failure to familiarize himself with the aforementioned safety provisions shall not relieve him from compliance with the obligations and penalties set forth therein.

D. Conduct operations in such a manner utilizing warning devices, such as traffic cones, barricades and warning lights that traffic, pedestrian and OWNER personnel are given adequate warning of hazards of the worksite as may be deemed necessary by the OWNER, Engineer of Record, and governing agency having jurisdiction over the work or political subdivision.

E. The Contractor shall be in compliance with all applicable provisions of the OSHA Code of Federal Regulations (CFR), including, but not limited to, the following:
   1. Process Safety Management (29 CFR 1910.119)
   2. Personal Protective Equipment (29 CFR 1910.132)
   3. Respiratory Protection (29 CFR 1910.134)
   4. Confined Space Entry Procedures (29 CFR 1910.146)
   5. Lockout/Tagout (29 CFR 1910.147)
   6. Industrial Truck / Forklift (29 CFR 1910.178)
   7. Electrical Safety (29 CFR 1910.301)
   8. Commercial Diving (29 CFR 1910.401)
   9. Air Monitoring (29 CFR 1910.1000)
   10. Asbestos & Lead Abatement (29 CFR 1910.1001, 1025)
   11. Blood Borne Pathogens (29 CFR 1910.1030)
   12. Crane Operations (29 CFR 1926 & ANSI)
   13. Fall Prevention Protection (29 CFR 1926.104)
   14. Welding and Cutting (29 CFR 1926.350)
   15. Scaffolding (29 CFR 1926.451)
   16. Excavation Protection (29 CFR 1926.650)
   17. Movement of Traffic (FDOT Index)

1.04 SAFE ACCESS BY FEDERAL, STATE, AND LOCAL GOVERNMENT OFFICIALS

A. The Contractor shall at all times provide proper facilities for safe access to the Work by authorized government officials.

1.05 CONSTRUCTION SAFETY PROGRAM

A. Develop and maintain for the duration of this Contract, a safety program that will effectively incorporate and implement all required safety provisions. The Contractor's Manual of Safety Practices outlining the firms policies on field safety procedures for employees shall be submitted to the Engineer for review before "Notice to Proceed" will be issued. The Contractor shall appoint an employee who is qualified and authorized to supervise and enforce compliance with the safety program.

B. Certain products specified in these specifications contain warnings by the manufacturers that under certain conditions, if instructions for use are not followed, a hazardous condition may exist. It is the Contractor's responsibility to instruct his workmen in the safe use of the product, or any product substitution.

C. The duty of the Engineer to conduct construction review of the Contractor's performance is not intended to include a review or approval of the adequacy of the Contractor's Safety Supervisor, the safety program, or any safety measures taken in, on, or near the construction site.

1.06 SAFETY EQUIPMENT

A. As part of the safety program, maintain at an office or other well-known place at the jobsite, safety equipment applicable to the Work as prescribed by the governing safety authorities, all articles necessary for giving first-aid to the injured, and establish the procedure for the immediate relocation to a hospital or a doctor's care of any person who may be injured on the jobsite.

B. Perform all necessary work to protect all personnel and the general public from hazards, including, but not limited to, surface irregularities or unramped grade changes, and trenches or excavations. Furnish barricades, lanterns, and proper signs to safeguard all persons and work.

C. The performance of all work and all completed construction, particularly with respect to ladders, platforms, structure openings, scaffolding, shoring, logging, machinery guards and the like, shall be in accordance with the applicable governing safety authorities.

D. During construction, construct and at all times maintain satisfactory and substantial temporary chain link fencing, solid fencing, railings, barricades or steel plates, as applicable, at all openings, obstructions, or other hazards. All such barriers shall have adequate warning lights as necessary, or required, for safety.

E. There shall be no oil dripping from equipment or oil spills.

1.07 STORAGE OF HAZARDOUS MATERIALS

A. The material shall be stored and handled in a proper and safe manner and upon its use, immediately dispose of the containers, cans, rags and remnants of the

material in a manner approved by the Department of Environmental Resources Management (DERM) at the Contractor's sole cost. The Contractor is not allowed to store empty containers at the site. In case of any violation, the Engineer will report such violation to DERM and the Contractor shall be subject to all penalties and fines as required by State and County regulations.

B. The Contractor is hereby cautioned that he cannot store any environmentally hazardous materials such as solvents, greases, lubricants or any other type of chemical substances at the Pump Station site. The Contractor shall be allowed to keep only such materials at the site for immediate use.

1.08 ACCIDENT REPORTS

A. If death, serious injuries, or serious damages are caused, report the accident immediately by telephone or messenger to the Engineer. In addition, the Contractor must promptly report in writing to the Engineer and OWNER all accidents whatsoever arising out of, or in connection with, the performance of the work whether on, or adjacent to, the site, giving full details and statements of witnesses.

B. If a claim is made by anyone against the Contractor or any subcontractor on account of any accident, promptly report the facts in writing to the Engineer and OWNER, giving full details of the claim.

1.09 TRAFFIC SAFETY AND ACCESS TO PROPERTY

A. Comply with all rules and regulations of the city, state, and county authorities regarding closing or restricting the use of public streets or highways. No public or private road shall be closed, except by express permission of OWNER and the controlling authority. Conduct the work so as to assure the least possible obstruction to traffic and normal commercial pursuits. Protect all obstructions within traveled roadways by installing approved barricades, signs, and lights where necessary for the safety of the public. The convenience of the general public and residents and the protection of persons and property are of prime importance and shall be provided for in an adequate and satisfactory manner.

B. Where traffic will pass over backfilled trenches before they are paved, the top of the trench shall be maintained with temporary asphalt that will allow normal vehicular traffic to pass over. Temporary access driveways must be provided where required. Access to businesses, schools and homes along the route of the work shall be provided by the Contractor at all times. Cleanup operations shall follow immediately behind backfilling and the worksite shall be kept in an orderly condition at all times.

C. Supply flagmen and guards or Police when they are required by regulation, when deemed necessary for safety, or required by the Engineer. Flagmen and Guards

shall be furnished with approved orange wearing apparel and other regulation traffic control devices.

1.10 FIRE PREVENTION AND PROTECTION

A. Perform all work in fire-safe manner. Furnish and maintain on the site adequate fire-fighting equipment capable of extinguishing incipient fires. Comply with applicable federal, local, and state fire-prevention regulations. Where these regulations do not apply, applicable parts of the National Fire Prevention Standard for Safeguarding Building Construction Operations (NFPA No. 241) shall be followed.

1.11 DECLARED STATE OF EMERGENCIES

HURRICANE

A. Hurricane Preparedness: During such periods of time as are designated by the United States Weather Bureau as being a hurricane alert, the Contractor shall perform all precautions as necessary to safeguard the work and property, including the removal of all small equipment and materials from the site, lashing all other equipment and materials to each other and to rigid construction, and any other safety measures as may be directed by the Engineer.

B. Prior to the Start of Work: The Contractor shall submit for approval, a Plan of Action for the specific actions to be taken on his particular projects during a hurricane watch and hurricane warning.

C. Upon Notification of a Hurricane Warning

1. Formal notification to the Contractors to implement their approved Plan of Action to protect the project and the public.
2. For construction projects at a Plant or Pump Station, a copy of the notifications will be provided to the Plant Superintendent or, for Pump Stations, to the Engineer. The Plant Superintendent or Engineer may notify the Construction Superintendent of any assistance he may need for the Contractor in order to secure the Plant or Pump Station.
3. For pipeline construction projects within the public right-of-ways, the Contractor will be notified by the Construction Manager Office to suspend his construction operations. The Contractor will backfill all open trenches, remove all construction equipment and materials from the right-of-way, remove unnecessary traffic barricades and signs, secure remaining barricades by "half burial" or "double sand bags".

POST DISASTER WORK

A. In the event of a disaster declaration by the Local or State governing authorities, the OWNER may choose to obtain the services of the Contractor to perform

work made an imminent priority for the disaster event. The compensation for the additional work caused by the disaster shall be negotiated between the Engineer and the Contractor with written approval provided by both parties prior to mobilizing at the designated location or locations. The value of the work performed shall be up to the amount of the original contract with contingencies and dedicated allowances.

1.12 JOINT SURVEY TO ESTABLISH AUTHENTICITY OF POSSIBLE DAMAGE CLAIMS

A. The Contractor shall maintain vertical and horizontal survey control points on all structures and improvements, located in the vicinity of the work prior to beginning work, and shall periodically check the points for movements with copies provided to the Engineer, of the survey notes for each survey and a copy of the layout of the survey control points.

B. After the contract is awarded and before commencement of work, the Contractor shall perform a thorough examination of existing buildings, structures, and other improvements in the vicinity of the work, as applicable, which might be damaged by his operations.

1. Examinations of existing structures, buildings, and other improvements in the vicinity of the work shall be done by the Contractor. The scope of the examination shall include cracks in the structures, settlement, leakage, and similar conditions. OWNER assumes no responsibility for pre-existing conditions of the structure.

2. Records in triplicate of all observations shall be prepared by the Contractor, photographs shall be taken by the Contractor signed and dated, with descriptive information and in the manner specified above. One signed copy of every document and photograph will kept on file in the office of the Engineer. Video recording also required.
3. The above records are intended to be used as indisputable evidence in ascertaining the extent of any damage which may occur as a result of the Contractor's operations and are for the protection of the Contractor and OWNER, and will be a means of determining whether and to what extent damage, resulting from the Contractor's operations, occurred during the Contract work.

C. In order to protect himself from being held liable for any existing damaged pavement, including detour routes, the Contractor is advised to notify in writing the authority having jurisdiction over the street where such defective pavement exists prior to proceeding with any work in the vicinity. Preconstruction videos and digital pictures shall be taken with date stamps of the entire area of work. A copy of all such notices shall be forwarded to OWNER.

1.13 TRAFFIC CONTROL AND USE OF PUBLIC STREETS

A. The Contractor shall be responsible for traffic control as specified hereinafter. Any reference to Miami-Dade County, its departments, or its published regulations, permits and data, shall be synonymous and interchangeable with other recognized governing bodies over particular areas of streets or their departments, published regulations, permits, or data. Abide by all applicable laws, regulations and codes thereof, pertaining to maintenance of public streets, detour of traffic, traffic control and other provisions as may be required for this project.

B. The Contractor shall be fully responsible for the maintenance of public streets, detour of traffic (including furnishing and maintaining regulatory and informative signs along the detour route), traffic control and other provisions, throughout the project as required by the Metropolitan Dade County Department of Public Works, Traffic Engineering Division (Traffic Division). Traffic shall be maintained according to corresponding typical traffic control details as outlined in the Dade County Public Works Manual. No street shall be completely blocked nor blocked more than one-half at any time, keeping the other half open for traffic without specific approval.

C. If required by the Traffic Division, employ the required number of uniformed off-duty policemen to maintain and regulate the flow of traffic through the construction area. The number of men required and the number of hours on duty necessary for the maintenance and regulation of the traffic flow shall be subject to their approval. If required for traffic control permits or agencies, the Contractor shall work odd or night hours, as required for traffic control reasons, and the cost of such work shall be considered as incidental to construction.

D. The Contractor shall provide all barricades and/or flashing warning lights necessary to warn motorist of the construction throughout the project.

E. Excavated or other material stored adjacent to or partially upon a roadway pavement shall be adequately marked for traffic safety at all times. Provide necessary access to all adjacent property during construction.

F. The contractor shall be responsible for the provision, installation and maintenance of all traffic control and safety devices, in accordance with specifications outlined in the Dade County Public Works Manual. In addition, provide for the resetting of all traffic control and information signing removed during the construction period.

G. Where excavations are to be made in the vicinity of signalized intersections, attention is directed to the fact that vehicle loop detectors may have been embedded in the pavement. Verify these locations by inspecting the site of the work and by contacting the Sunshine 811, at 1-800-432-4770, (or by submitting an internet ticket entry via www.sunshine811.com) . Any loop detector which is damaged, whether shown on the Plans or not, shall be repaired or replaced to the satisfaction of the Traffic Division.

H. Notify the Traffic Division 24 hours in advance of the construction date, and 48 hours in advance of construction within any signalized intersection.

I. Temporary pavement will be required over all cuts in pavement areas, and also where

traffic is to be routed over swale or median areas. When the temporary pavement for routing traffic is no longer necessary, it shall be removed and the swale or median area restored to their previous condition.

1.14 WORKING IN CONFINED SPACES

Where a Contractor needs to work in a confined space, the Contractor must comply with the General Industry, OSHA Confined Space Standard, 29 CFR 1910.146 or the equivalent Confined Space Standard in CFR 1926, Safety and Health Regulations for Construction Standards.

PART 2 PRODUCTS

NOT USED

PART 3 EXECUTION

NOT USED

END OF SECTION

SECTION 01018

ENVIRONMENTAL CONTAMINATION

PART 1 - GENERAL

1.01 ENVIRONMENTAL CONSIDERATIONS

A. For any work conducted in a contaminated area within the project boundaries where hazardous materials or hydrocarbons have been encountered, were previously known to exist, or is suspected by the Contractor or the Inspector, the Contractor must comply with all applicable requirements of OSHA, EPA, FDEP and Miami-Dade County Regulatory and Environmental Resources Department.

1.02 SPECIALIZED CONSTRUCTION AREA

A. Specialized construction areas are defined as areas where contaminants are discovered and require construction by personnel qualified by training and equipped with personal protective equipment for such work.

B. Work in specialized construction areas shall be carried out by personnel qualified by training and equipped for such activities. These personnel shall be either subcontractors with licensing and certification as specialists in this type of construction or the Contractor's own personnel who have taken and been certified as having passed the required training course(s). Licensing and certifications shall be submitted to the OWNER for verification and shall in all cases be satisfactory to both the OWNER and other authorities with jurisdiction. The Field Health and Safety Technician furnished by the Certified Industrial Hygienist or Environmental Engineer shall be present on the site during all construction in specialized construction areas unless the nature of the work is non-hazardous such that either the Site Specific Health and Safety Plan or the Certified Industrial Hygienist or Environmental Engineer authorizes his absence.

C. Disposal of any contaminated soils and/or groundwater must comply with all applicable federal, state and local requirements.

PART 2 - PRODUCTS

2.01 The Engineer of Record shall consult with the OWNER regarding its requirement for material type (including pipe, fitting, gasket, valve interior coating, and the like) to be installed in contaminated areas.

PART 3 - EXECUTION

3.01 INSTALLATION REQUIREMENTS

A. When potable water mains are to be installed in an area of hydrocarbon contamination,

each joint gasket shall be protected from possible hydrocarbon permeation which would in turn contaminate the drinking water.

B. The requirements of this Section shall be closely adhered to in all cases where proposed mains are to be installed in an area of hydrocarbon contamination. These requirements and those imposed by Miami-Dade County Regulatory and Environmental Resources Department or any other agency having jurisdiction an addition to, and take precedence over the standard specifications and standard details for ductile iron water mains.

C. Contaminated backfill cannot be placed back into an existing trench. Contaminated fill shall be replaced with clean fill, hauled offsite and legally disposed of at a location which can handle the material.

D. The OWNER may require gasketed joints be protected by encasing the entire joint with a hydrocarbon impermeable material. In this case, all joint gaskets shall be protected including those on pipe, fittings, valves, fire hydrants and specialty items.

END OF SECTION

SECTION 01021

OWNER ALLOWANCES

PART 1 - GENERAL

1.01 DESCRIPTION

A. This Section provides for administrative procedures for the Contractors utilization of monetary amounts for Owner Allowances when contained in the Contract Price or Total Base Bid.

B. The Contractor has included in the Contract Price all Allowances so named in the Contract Documents and shall cause the Work so covered to be performed for such sums and by such persons or entities as may be acceptable to Owner and Engineer.

C. The Contractor agrees that an Allowance, if any, is for the sole use of Owner to cover unanticipated or undetermined costs.

D. All Owner Allowances which remain unused, in whole or in part, remain the property of the Owner.

1.02 RELATED SECTIONS

A. Bid Form.

B. Section 01025 – Measurement and Payment

C. Section 01152 – Application for Payment

D. Other Sections as applicable

1.03 SCHEDULE OF ALLOWANCES

A. Bid Form: Allow the lump sum of $150,000 for Permitting Fee and Owner's Contingency Allowance.

1.04 PROCEDURES FOR ADMINISTRATION OF ALLOWANCES.

A. Funds will only be drawn from Owner Allowances by receiving prior written approval from the Owner and the Engineer.

B. Costs shall be as represented in the Unit Price Schedule.

C. Payment shall be as represented in Section 01025 – Measurement and Payment.

1.05 COSTS INCLUDED IN PERMITTING FEE ALLOWANCES

A. Cost of the permit application fee determined by the Agency at the time of the Contractor's submittal. All other costs associated with obtaining the required permits, such as preparing plans, reports, or calculations, overhead costs, permit runners, expedited fees etc. shall be the responsibility of the Contractor.

PART 2 - PRODUCTS (NOT USED)

PART 3 - EXECUTION (NOT USED)

END OF SECTION

SECTION 01025

MEASUREMENT AND PAYMENT

PART 1 - GENERAL

1.01 DESCRIPTION

A. This Section includes administrative and procedural requirements for determining Work completed under the unit price contract.

B. Any items that are not assigned specific bid item number or not listed in Bid Form or Bid Schedule but are required to complete the project scope of work per plans, details and specifications will be considered incidental to the contract and no additional payment will be made for such items.

1.02 RELATED SECTIONS

A. Bid Form or Bid Schedule

B. Section 01100 – Special Project Procedures

C. Section 01152 – Applications for Payment

D. Section 01370 – Schedule of Values

E. Other Sections as applicable.

1.03 REFERENCE STANDARDS

A. Manual of Uniform Traffic Control Devices (MUTCD)

B. FDOT Standard Specification for Road and Bridge Construction (Standard Specifications)

C. FDOT Standard Plans for Design, Construction, Maintenance and Utility Operations in the State Highway System (Standard Plans/Indexes)

D. Miami-Dade Water and Sewer Department (MDWASD) standards and specifications

E. Miami-Dade County Department of Regulatory and Economic Resources (RER), Division of Environmental Resource Management (DERM) standards

F. Florida Department of Health standards and requirements

G. Miami-Dade County Fire Department requirements

H. Dade County Department of Public Works, Traffic Engineering Division standards

I. City of Miami Gardens Public Works standards

J. City of Opa-Locka Public Works and Building Department standards

1.04 GENERAL REQUIREMENTS

A. Prices shall include all costs required for the completed, in-place construction of the specified unit of work. This may include but not be limited to, materials and delivery; cost of installation; incidentals; labor including social security, insurance, and other required fringe benefits; workman's compensation insurance; bond premiums; rental of equipment and machinery; taxes; testing; surveys; record drawings; as-builts; incidental expenses; and supervision. Installation, acceptance and payment shall be in accordance with the REFERENCE STANDARDS.

B. The Owner reserves the right to reject the Contractor's measurement of completed work that involves use of established unit prices, and to have this Work measured by an independent surveyor acceptable to the Contractor at the Owner's expense.

C. Contract Sum adjustments will be by Change Order on basis of net accumulative change for each unit price category.

1. Except as otherwise specified, unit prices shall apply to both deductive and additive variations of quantities.

2. Lump sum and unit prices in the Agreement shall remain in effect until date of final completion of the entire Work.

D. Partial payment for material and equipment properly stored and protected will be made in accordance with requirements of the General Conditions.

E. No separate payment will be made for Record Drawings or As-built Drawings. All survey layout and record drawings/As-Builts shall be considered incidental to the cost of construction and shall include all calculations and field work required, in order to establish all horizontal and vertical controls, set all stakes needed, such as grade stakes, offset stakes, reference point stakes, slopes stakes, and other reference marks or points necessary to provide lines and grades for construction and as-builting of all roadway, driveway, parking, sidewalk, drainage construction and miscellaneous items.

F. Abbreviations:

1. Acre - AC
2. Allowance - AL
3. Cubic Yard - CY
4. Each - EA
5. Furnish and Install - F & I
6. Gallons - GA
7. Gross Mile - GM
8. Linear Feet – LF
9. Lump Sum - LS
10. Million Gallons – MG
11. Net Mile - NM
12. Square Foot – SF
13. Square Yard – SY
14. Ton - TN

PART 2 - PRODUCTS (NOT APPLICABLE)

PART 3 - EXECUTION

3.01 GENERAL REQUIREMENTS - BID ITEM NO. 1.01

A. Payment shall be made as a percentage of the Lump Sum Price.

B. The Lump Sum Price shall include the cost of bonds, insurance, licenses and all administrative costs not specifically identified in other bid items.

C. The Lump Sum Price shall exclude the cost of construction material and installation.

3.02 MOBILIZATION AND DEMOBILIZATION - BID ITEM NO. 1.02

A. Payment shall be made as a percentage of the Lump Sum Price.

B. The Lump Sum Price shall include compensation for all labor, materials, equipment and all other incidentals required for all temporary facilities, transportation, communications, office, maintenance, project signs, and any other pre- or post-construction expenses necessary for the start or cessation of the Work, not specifically identified in the costs of the work.

C. The Lump Sum Price shall exclude the cost of construction material and installation.

D. No further payment shall be made for remobilization unless all of the work is suspended by the Engineer for a period in excess of three months and through no fault to the Contractor.

E. The Lump Sum Price shall not exceed five percent (3%) of the contract price.

3.03 MAINTENANCE OF TRAFFIC - BID ITEM NO. 1.03

A. Payment shall be made as a percentage of the Lump Sum Price.

B. The Lump Sum Price shall include compensation for required labor, materials, all necessary temporary pavement markings and signing for vehicles and pedestrians, temporary pavement, temporary business signage, professional fees, and equipment necessary to provide traffic control for two way traffic at all times in accordance with the plans and specifications.

C. MOT permits and approvals from the applicable regulatory agencies, including but not limited to FDOT, Broward County Highway Construction and Engineering Division, and the City of Dania Beach, are the responsibility of the contractor. All MOT plans are to be sealed by a Florida Registered Engineer holding a current FDOT MOT certificate.

D. MOT shall include both vehicular and pedestrian requirements.

E. Temporary pavement markings and signage shall be provided wherever existing has been damaged, removed, or is no longer visible. The temporary markings shall be

maintained until final markings are installed after asphalt resurfacing.

F. Payment item for Maintenance of Traffic shall not exceed five percent (2%) of the contract price.

3.04 PREVENTION, CONTROL AND ABATEMENT OF EROSION AND WATER POLLUTION - BID ITEM NO. 1.04

A. Payment shall be made as a percentage of the Lump Sum Price.

B. The Lump Sum Price shall include full compensation for all equipment, materials, supplies, and labor necessary to prepare, obtain permit approvals from governing agencies, and implement the prevention, control, and abatement of erosion and water pollution. Work shall include but not be limited to mulching, sand bagging, slope drains, sediment basins, berms, baled hay or straw, inlet protection, silt fences and staked turbidity barriers, floating turbidity barrier, orange fence, rock bags, artificial coverings and other items relating to the construction/removal and routine maintenance, including mowing, or the prevention, control and abatement of erosion and water pollution plan.

3.05 CLEARING & GRUBBING, DEMOLITION, REMOVAL & DISPOSAL – BID ITEM NO. 1.05

A. Payment shall be made as a percentage of the Lump Sum Price.

B. The Lump Sum Price shall include full compensation for all equipment, materials, supplies, and labor necessary to perform clearing & grubbing, striping, excavation, demolition, abandonment of existing pipe systems with flowable fill or grout, and other items described in plans, details, and specifications, and disposal of such materials and debris.

C. This bid item includes, but not limited to, removal and disposal of existing water main, water services, appurtenances, fittings, fire hydrants, valves and valve boxes, meter boxes, sidewalks, curbs, curb and gutter, driveways, asphalt pavement, pavement markings and RPMs, signs & sign posts, landscape, removal and disposal of unsuitable or excess material, etc.

D. The Contractor's lump sum price shall include full compensation for all supervision, permits, labor, equipment, and materials required to protect, prune of existing trees and/or remove the existing as deemed necessary by the CITY and Engineer.

E. All materials from clearing & Grubbing, demolition, and removal actions shall be legally disposed of off-site as determined by the Contractor. All disposal costs shall be included in the Bid Item.

3.06 WATER MAIN, WATER SERVICES, POTABLE WATER SYSTEMS - BID ITEM NO. 1.06

A. The Contractor’s lump sum price shall include compensation for all labor, equipment, and materials to furnish and complete installation of functioning potable water mains, water services, systems including connection to existing mains, tapping sleeves and valves, gate valves, fire hydrants, concrete slabs, bollards, water meter boxes, water meter relocation, backflow preventers, all piping, fittings, bends, reducers, valve boxes, connections, joint restraints, sleeves, pipe bursting, boring, directional bore, water service

relocations from rear lots, etc. as indicated in the plans, details, contract documents, and specifications.

B. This bid item shall include backfill, fill, trench restoration, all required permitting and testing and inspections, and restoration of pavement, concrete curbs, sod, sidewalks, pavers, pavement markings, signs, driveways, and any items disturbed to accommodate the installation of potable water systems.

3.07 PERMIT FEE AND OWNER'S CONTINGENCY ALLOWANCE - BID ITEM NO. 1.07

A. Payment for Permit Fee Allowance shall be direct reimbursement for permit fees paid for by the CONTRACTOR. Amount reimbursed for Permitting Allowance shall not including overhead costs, permit runners, expedited fees, etc. A receipt shall be submitted for each reimbursement requested and approved by Owner and Engineer prior to receiving payment.

B. Owner's Contingency Allowance is for the sole use of Owner to cover unanticipated or undetermined costs.

3.08 MEASUREMENT AND PAYMENT

A. Payment shall constitute full compensation and will be made as indicated in the RELATED SECTIONS.

B. The Contractor shall submit a Schedule of Values for Engineer approval in accordance with Section 01370 prior to the first Application for Payment.

C. The quantity approved for payment shall be either:

1. Percentage of the Lump Sum price - A percentage of the lump sum price equivalent to the percentage of the project completion as determined by the Engineer as of the date of the pay request submitted. The percent completion of the project shall be based on the percent of the total project actually constructed and not on the percent of the Contract price completed.

2. Measured Quantities - The actual quantities in-place and accepted as measured by the Engineer on the date of the pay request submitted in the units specified in the bid form or schedule of values.

3.09 PROTECTION

A. Where pavement, pipes, valves, appurtenances, trees, shrubbery, fences, other property or structures are in proximity to the WORK, adequate protection shall be provided. Such protection is considered incidental to construction and shall not be assigned to any pay item.

3.10 RESTORATION

A. Where pavement, pipes, valves, structures, appurtenances, trees, shrubbery, fences, other property or structures not designated as pay items, have been damaged, removed or disturbed by the Contractor, whether deliberately or through failure to carry out the requirements of the Contract Documents, state laws, municipal ordinances or the specific

direction of the Engineer, or through failure to employ usual and reasonable safeguards, such property and surface structures shall be replaced or repaired at the expense of the Contractor to a condition equal to that before work began within a time frame approved by the Engineer. Such restoration is considered incidental to construction and shall not be assigned to any pay item or bid item.

END OF SECTION

SECTION 01031

GRADES, LINES AND LEVELS

PART 1 - GENERAL

1.01 SCOPE

This work of this Section comprises the establishing of grades, lines and levels. The work specified in this Section will not be paid for directly, but will be considered as incidental work. The contractor shall perform this work, including field engineering and surveying services, at no additional cost to the OWNER.

1.02 RELATED WORK

Section 01720 - Project Record Documents
Section 01725 - Project As-Builts

PART 2 - PRODUCTS

2.01 Materials:

Furnish all stakes, templates and other materials necessary for establishing and maintaining of the lines and grades necessary for control and construction of the Work and all incidental labor necessary for the prosecution of the Work.

PART 3 - EXECUTION

3.01 LAYOUT OF THE WORK:

A. GENERAL

1. The Engineer of Record, through retaining the services of a Professional Land Surveyor and Mapper, who is licensed in the State of Florida, shall furnish the Contractor with horizontal and vertical controls which shall be utilized as specified elsewhere herein to layout the work. The Professional Land Surveyor and Mapper, who is licensed in the State of Florida hired by the Contractor, shall verify all controls provided by the Engineer of Record and it shall be the responsibility of the Contractor to preserve same.

2. The Contractor shall retain the services of a Professional Land Surveyor and Mapper, who is licensed in the State of Florida who, shall furnish and set stakes, establishing line and grade and shall solely be responsible for the layout of the work as well as the recording of all as-built dimensions and elevations. The Contractor shall furnish all additional stakes, templates, and other materials for marking and maintaining survey points and lines given, and shall be responsible for their preservation. Should

any of the horizontal and vertical control points set by the Engineer of Record be destroyed or disturbed, they shall be reset by the Contractor's Florida Registered Land Surveyor and Mapper, at the Contractor's expense. All control points previously set by the Engineer of Record shall be verified by the Contractor's surveyor.

B. LAYOUT

As provided in Subsection 3.01-A, above, the Contractor through the services of his Florida Registered Land Surveyor and Mapper, shall establish the line and bench mark and other reference points for the pipeline or structure, as follows:

1. Structures: Will consist of baselines, stakes at building corners, centers and centerlines, auxiliary lines and two bench marks from which to establish the elevations. The Engineer of Record shall set a minimum of three horizontal and vertical control points which shall thereafter be maintained by the Contractor, without further help from the Engineer of Record, for use in establishing and checking the lines and grades as shown on the contract drawings.

2. Pipelines: Will consist of baselines, construction lines, centerlines, auxiliary lines and bench marks from which to establish the elevations. The Engineer of Record shall set horizontal and vertical control points at the beginning and end of the work and at a minimum distance of 1,400 ft. in between. When the total distance is less than 1,400 ft. control points shall be set at the beginning and end of the work.

3. The Contractor shall use this information to construct the structures and pipelines to the lines and grades shown on the project drawings and shall supply all equipment and personnel necessary to accomplish this end.

4. For pipelines, this will consist of establishing all points of bend (but not necessarily bevel pipe unless in close proximity to other facilities), valves, tees, crosses and other stations not more than 100 feet apart along the proposed centerline of the pipe, or along a stationed offset line as shown on the Plans, marked by a nail in a metal cap if in pavement, with the station painted nearby or by a nail in the top of a wooden stake driven flush with the ground with the station marked on the flag stake nearby, if not in pavement.

5. The Contractor shall supply the Engineer/Inspector with a copy of the Florida Registered Land Surveyor and Mapper's layout of the work immediately upon its availability to his own forces.

6. The Contractor shall make his equipment and men available to the Inspector for spot checking the accuracy of the pipe laying. The Inspector shall require the Contractor to correct pipe alignment when necessary.

C. RECORD DRAWINGS:

1. During the entire construction operation, the Contractor shall retain the services of a State of Florida Registered Land Surveyor and Mapper who shall maintain records of

the installation, including all deviations from the Plans and Specifications by obtaining "as-built" dimensions and elevations.

2. The Surveyor shall prepare Record As-Built Drawings showing correctly and accurately all changes and deviations made during construction, including approved construction variances, to reflect the work as it was actually constructed.

3. Refer to Sections 01720 and 01725 for criteria for developing project record documents and record As-Built drawings.

D. HORIZONTAL AND VERTICAL CONTROL FOR DESIGN

The following shall apply when establishing horizontal and vertical controls for design. They shall also be used for the development of construction drawings.

1. Survey stationing shall proceed from south to north and/or from west to east.

2. Baseline or centerline shall be tied to section corners, or to monument lines or to right-of-way lines.

3. Points along the survey line shall be referenced to perpetuate the alignment. Whenever possible, the reference points shall be established at right angles to the survey line and at intervals no longer than 1,400 feet. Reference points shall be shown on construction plans.

4. Centerline of side streets shall be established and set by nail and disc. Station and angle turned shall be given and shown on the plans.

5. All curve data (horizontal) shall be shown on Plans. Point of curvature and point of tangency shall be set in the field, reference P.C. and P.T. or P.I.

6. Easement lines shall be tied to baseline or centerline. Give station and angle turned.

7. Set centerline or baseline stations every 100 feet on the ground using iron rods in unpaved areas or P.K. nails on asphalt.

8. On vertical control refer to datum used (such as NGVD 88, NGVD 1929, City of Miami). Nationwide, surveys and as-builts are in the process of conversion to NAVD 88 from the NGVD 1929. The OWNER will accept NAVD 88 datum with a conversion factor on each page. The Florida Department of Transportation is using the NAVD 88 datum. Projects within FDOT roadway limits shall either use NAVD 88 datum or provide a conversion factor on each page if the NGVD 1929 datum is used. For projects using City of Miami datum provide a conversion factor on each page to the NAVD 88 datum.

9. Temporary bench marks (T.B.M.) and bench marks shall be established throughout the project at approximately 1,000 feet intervals. Show information on plans

10. Centerline shall be tied to baseline if different from each other.

11. Tie proposed pipe to centerline or baseline, not to right-of-way line. Right-of-way line shall be tied to centerline or baseline.

12. All survey information shall be shown on the plans.

13. All point of intersections and deflection angles shall also be shown. Angle can be submitted by bearings.

END OF SECTION

SECTION 01070

CUTTING AND PATCHING

PART 1 GENERAL

1.01 SCOPE OF WORK

A. Work Included: This section includes work required to provide complete, in place, cutting, fitting, and patching of new and existing work.

1. Do not imperil any work by cutting or altering work or any part of it.
2. Do not cut structural or reinforcing steel without the written consent of the Engineer.

1.02 DESCRIPTION OF WORK

A. Execute cutting (including excavating), fitting or patching of work, required to:

1. Make the several parts fit properly.
2. Uncover work to provide for the installation of ill-timed work.
3. Remove samples of installed work as specified for testing.
4. Install specified work in existing construction.

B. In addition to Contract requirements, upon written instructions from the Engineer:

1. Uncover work to provide for Engineer's observation of covered work.
2. Remove samples of installed materials for testing.

1.03 SUBMITTALS DURING CONSTRUCTION

A. Prior to cutting which affects structural integrity or safety, submit written notice to the Engineer and other Contractors, requesting consent to proceed with cutting.

B. All cutting and patching, to be performed at no additional cost to the OWNER.

C. Should conditions of work, schedule, indicate change of materials or methods, submit written recommendation to the Engineer, including:

1. Conditions indicating change.
2. Recommendations for alternative materials and/or methods.
3. Submittals as required for substitutions.
4. Submit written notice to the Engineer, designating time work will be uncovered, to provide for observation.

PART 2 PRODUCTS

2.01 GENERAL

A. Materials for replacement of work removed shall comply with applicable sections of these specifications for type of work to be performed. Materials not specified herein

shall be replaced as specified in Sub- Section 3.03 of this Section, Restoration.

B. Provide all tools and equipment required to accomplish cutting and patching.
C. Completely remove damaged or deteriorated concrete or other material.
D. Legally dispose of all demolition debris generated by the project. The Contractor shall pay for all loading, hauling, transportation and applicable tipping fees.

PART 3 EXECUTION

3.01 INSPECTION

A. Inspect existing condition of work, including elements subject to movement or damage during cutting, patching, excavating, and backfilling.

B. After uncovering work, inspect conditions affecting installation of new products.

3.02 PERFORMANCE

A. Execute fitting and adjustment of products to provide finished installation to comply with specified tolerances and finishes.

B. Execute cutting and demolition as specified below:

1. The cutting and removal of existing work necessary for modifications and installation of new work shall be made with a minimum of damage to the work that is to remain. Any damage done to existing facilities which are to remain shall be repaired at the Contractor's expense to the satisfaction of the OWNER.
2. When removing materials, or portions of existing structures, and when making openings in walls and partitions, the Contractor shall take all precautions and use all necessary barriers and other protective devices so as not to damage the structures beyond the limits necessary for the new work, and not to damage the structures or contents by falling or flying debris. Unless otherwise permitted, line drilling will be required in cutting existing concrete.
3. Surfaces of seals visible in the completed work shall be made to match as nearly as possible the adjacent surfaces.
4. Non-shrink grout shall be used for setting wall casting, sleeves, and leveling equipment bases. Doweling anchors into existing concrete and elsewhere as required shall be done with an approved type of epoxy material.
5. Debris created within facilities, which are to remain in service during the modification work, shall be removed daily. Operators of the OWNER and Contractor's employees shall not be subjected to hazardous areas, when performing their duties.
6. Follow other specific instructions for the modification work given in other sections of these specifications and as shown on the Drawings. Should these instructions conflict, the more stringent conditions shall prevail.

C. Restore work which has been cut or removed; install new products to provide completed work in accordance with the requirements of Contract Documents.

3.03 RESTORATION

A. Restore structures and surfaces damaged during the course of this Contract that are to remain in the completed work.

B. Restoration shall be done with new materials and appropriate methods as specified elsewhere in these specifications for new work of similar nature; if not specified, best recommended practice of manufacturer, or appropriate trade association.

C. Restore damaged work in such a way that there is a secure intimate bond or fastening between new and old work. Restored surfaces shall be finished to such planes, shapes, and textures that no transition between new and old work is evident in finished surfaces.

3.04 CLEANING

A. Remove from site all debris, rubbish, and extra material caused by cutting and patching.

END OF SECTION

THIS PAGE LEFT INTENTIONALLY BLANK

SECTION 01090

REFERENCE STANDARDS

PART 1 - GENERAL

1.01 REFERENCE STANDARDS

A. Comply with the requirements of standard with date as specified herein. Standards without dates shall be understood as the Standard current at the time of bid. In case of conflict between the referenced standards, the one having the more stringent requirements shall govern.

B. In case of conflict between the referenced standards and the Project Documents, the Project Documents shall govern.

C. When no reference is made to a code, standard, or specification, the standard specifications of the ASTM, the ANSI, the ASME, the IEEE, or the NEMA shall govern.

1.02 QUALITY ASSURANCE

A. Application: When a standard is specified by reference, comply with requirements and recommendations stated in that standard, except when requirements are modified by the Contract Documents or applicable codes establish stricter standards.

B. Publication Date: Whenever in these specifications references are made to published specifications, codes, standards, or other requirements, it shall be understood that wherever no date is specified, only the latest specifications, standards, or requirements of the respective issuing agencies which have been published as of the dated that the Work is advertised for bids, shall apply; except to the extent that said standards or requirements may be in conflict with applicable laws, ordinances, or governing codes. No requirements set forth herein or within the Contract Documents shall be waived because of nay provision of or omission from said standards or requirements.

1.03 ABBREVIATIONS AND ACRONYMS

Abbreviated titles for other governing standards are used throughout these specifications and although most of them are widely known, their complete titles are given below to avoid misunderstanding.

AAMA	Architectural Aluminum Manufacturer's Association
AASHTO	American Association of the State Highway and Transportation Officials
ACI	American Concrete Institute
ACPA	American Concrete Pipe Association
AFBMA	Anti-Friction Bearing Manufacturer's Association, Inc.
AGMA	American Gear Manufacturer's Association

AHGDA	American Hot Dip Galvanizers Association
AI	Asphalt Institute
AIA	American Institute of Architects
AISC	American Institute of Steel Construction
AISI	American Iron and Steel Institute
AITC	American Institute of Timber Construction
AMCA	Air Movement and Control Association
ANSI	American National Standards Institute, Inc.
APA	American Plywood Association
API	American Petroleum Institute
APHA	American Public Health Association
APWA	American Public Works Association
ASA	Acoustical Society of America
ASAE	American Society of Agriculture Engineers
ASCE	American Society of Civil Engineers
ASHRAE	American Society of Heating, Refrigerating, and Air-Conditioning Engineers
ASLE	American Society of Lubricating Engineers
ASME	American Society of Mechanical Engineers
ASMM	Architectural Sheet Metal Manual
ASSE	American Society of Sanitary Engineers
ASTM	American Society for Testing and Materials
AWPA	American Wood Preservers Association
AWPI	American Wood Preservers Institute
AWS	American Welding Society
AWWA	American Water Works Association
BHMA	Builders Hardware Manufacturer's Association
CLFMI	Chain Link Fence Manufacturers Institute
CMA	Concrete Masonry Association
CRSI	Concrete Reinforcing Steel Institute
DIPRA	Ductile Iron Pipe Research Association
EIA	Electronic Industries Association
ETL	Environmental Test Laboratories
FDEP	Florida Department of Environmental Protection
FDOT	Florida Department of Transportation
FS	Federal Specifications
IEEE	Institute of Electrical and Electronics Engineers
IES	Illuminating Engineering Society
IPCEA	Insulated Power Cable Engineers Association
ISA	Instrument Society of America
ISO	International Organization for Standardization
LPI	Lightning Protection Institute
MBMA	Metal Building Manufacturer's Association
MTI	Marine Testing Institute
NAAMM	National Association of Architectural Metal Manufacturer's
NACE	National Association of Corrosion Engineers
NBS	National Bureau of Standards
NEC	National Electrical Code
NEMA	National Electrical Manufacturer's Association

NFPA	National Fire Protection Association
NRCA	National Roofing Contractors Association
NRMCA	National Ready Mixed Concrete Association
OSHA	Occupational Safety and Health Administration
PCA	Portland Cement Association
PCI	Prestressed Concrete Institute
PS	Product Standard
SFBC	South Florida Building Code
SMACCNA	Sheet Metal and Air Conditioning Contractors National Association
SSPC	Steel Structures Painting Council
SSPWC	Standard Specifications for Public Works Construction
SFWMD	South Florida Water Management District
UL	Underwriters Laboratories, Inc.

PART 2 - PRODUCTS

(Not Used)

PART 3 - EXECUTION

(Not Used)

END OF SECTION

THIS PAGE LEFT INTENTIONALLY BLANK

SECTION 01100

SPECIAL PROJECT PROCEDURES

PART 1 - GENERAL

1.01 RESPONSIBILITY OF THE CONTRACTOR

A. The Contractor shall have at all times as his agent on the site of the work a competent superintendent capable of reading and thoroughly understanding the Plans and Specifications.

B. The Contractor shall be responsible for the good condition of the work or materials until formal release from his obligations under the guidelines of this project. The Contractor shall store materials and shall be responsible for and shall maintain partly or wholly finished work during the continuance of the Contract. He shall place sufficient lights and danger signals on or near the work from sunset to sunrise; shall erect suitable railings or other protective devices about unfinished work, open trenches, embankments, or other obstructions; shall provide all necessary watchmen on the work by day or by night for the safety of the public, and shall take all necessary precautions for preventing accidents or injuries to persons or property in or about the work.

C. The Contractor shall be responsible for the coordination, location, and relocation of utilities, including but not limited to utility light poles, cables, fiber optic lines, water mains and services, sewer mains and services, electrical, telephone and television cables, signals and signal poles, fences, guard rails, piping, culverts, conduits and drains that interfere with the positioning of the work as set out on the Drawings. The cost of all such coordination and relocations shall be included in the Bid for the Project and shall not result in any additional cost to the OWNER.

D. Prior to proceeding with trench excavation the Contractor shall contact all utility companies and all other users of the right-of-way in the area to aid in locating their underground services. It shall be the Contractor's responsibility to contact utility companies at least three NORMAL WORKING DAYs before starting construction. The Contractor shall proceed with caution in the excavation and preparation of the trench so that the exact location of underground utilities may be determined. The Contractor shall comply with Chapter 556, F.S., "Underground Facility Damage Prevention and Safety Act", Chapter 553, F.S., "Florida Trench Safety Act, Part IV", Chapter 368, F.S., "Florida Gas Safety Law, Part 1", and OSHA Standard 1926.651.

E. Wherever piping systems or utilities such as water, wastewater, air, chemical, electrical or other service lines must be crossed, deflection of the pipe within recommended limits and cover shall be used to satisfactorily clear the obstruction unless otherwise indicated on the Drawings. Approximate locations of known installations in the vicinity of new work must be verified in the field by the Contractor, who shall uncover them carefully, prior to commencement of the work.

F. It is the responsibility of the Contractor to ensure that all utility or other existing facilities, the stability of which may be endangered by the close proximity of excavation, are temporarily held in position while work proceeds in the vicinity of the pole or other facilities and that the utility or other companies concerned be given reasonable advance notice of any such excavation by the Contractor.

G. The Contractor shall take all reasonable precautions against damage to existing utilities. However, in the event of a break in an existing water main, gas main, sewer or underground cable, the Contractor shall immediately notify the responsible official of the organization operating the interrupted utility. The Contractor shall lend all possible assistance in restoring services and shall assume all cost, charges, or claims connected with the interruption and repair of such services, as determined by the Owner.

H. The Contractor shall familiarize himself with all codes and regulations of the Federal Government, the State of Florida, the County of Miami-Dade and any municipal corporations applicable to every aspect of the Project. The Contractor shall provide all materials and shall perform all work necessary to fully comply with all provisions and requirements of applicable codes and regulations whether specifically indicated in the Plans and Specifications or not. It is the intent of the OWNER to obtain a finished project in full compliance with all requirements of any agencies having jurisdiction over any portion of the work involved in the Project. The Inspector will not recommend acceptance of the work until all requirements and provisions of pertinent codes and regulations have been satisfactorily fulfilled

1.02 PIPE AND EXISTING UTILITIES

A. The underground utilities, structures and other facilities shown on the Plans are located according to the best information available, but may vary by several feet from both the position and elevation shown. The Contractor shall explore far enough in advance of his main trench to determine the exact location and condition of such utilities, structures or facilities so that, before the pipe is installed, the Engineer may change the line or grade of the pipe, should that become necessary to avoid a conflict.

B. All costs for changing the grade of the proposed main downward 2'-6" or less to clear obstructions located differently than shown on the Plans, or to clear obstructions not shown on the Plans but the location of which could have become known or should have become known by proper observation of field conditions or the proper exploratory procedure, shall be included in the prices bid under the various items of the Quotation and no additional compensation will be allowed. Changing the grade of the proposed main by rising deflections, or the alignment by horizontal deflections, will not be considered as extra work, or extra cost, to the Contractor, and in some cases a credit to the OWNER may be warranted.

C. Additional cost, if any, for changing the grade of the proposed main downward more than 2'-6", for the same reasons, will be paid for if approved by the OWNER in accordance with the General Covenants and Conditions.

D. In all cases where the main is deflected either horizontally or vertically, and the Engineer requires additional work and items such as paving and similar items for which a pay item was established in the Quotation, then such additional work and items will be paid for at the prices bid. Wider trench widths may be paid with the approval of the Engineer.

E. The Contractor shall determine the locations of recent additions to the systems not shown on the Plans. Extreme caution shall be exercised to eliminate any possibility of any damage to utilities resulting from his activities. The location of all overhead utilities shall be verified and the Engineer notified of any conflict which might occur. The Contractor shall be responsible for

determining which poles will need shoring during excavation and shall provide such shoring and support as is required.

1.03 CONNECTIONS TO EXISTING PIPING:

A. Perform in such a manner that no damage and minimal interruption is caused to existing installation. Any damage caused to existing installations shall be repaired or replaced by the Contractor.

B. Coordinate connection operations with the OWNER, who shall be notified at least 7 days in advance of any activity which may interfere with the existing utility system.

C. All connections to existing mains of the Miami-Dade Water and Sewer Department and/or OWNER shall be made under the direct supervision of Department personnel and/or OWNER. Valves separating the main being installed from existing mains shall be operated by OWNER personnel upon request by the Contractor. Under no circumstances shall any of these valves be operated by the Contractor's personnel.

D. Any proposed length of pipe, fitting or valve to be installed as an integral part to an active water main, shall be swabbed on the inside with calcium hypochlorite, HTH, Perchloron, or approved equal, mixed in solution with water. The quantity of hypochlorite shall in all cases be subject to the approval of the OWNER whose representative shall be present at all times while this phase of the work is in progress.

E. The installation shall be made as swiftly as possible after service has been halted in the pipeline and any water in the ditch shall be kept below the level of the length of pipe, fitting or valve. The pipeline shall then be placed in service by the OWNER personnel.

1.04 WATER USED IN CONSTRUCTION

A. The OWNER will furnish water for construction purposes with charge from the nearest fire hydrant using the Contractor’s designated floating meter. **The Contractor shall obtain a project specific floating meter and maintain daily records for meter readings.** The floating meter shall be used only for the work of this project; any other use will be considered tampering. There will be charge for consumption unless otherwise noted.

B. The Contractor can obtain the meter through proper application and payment of deposit fee at the MDWASD's Business Office, 3575 South LeJeune Road, Miami, Florida or Miami-Dade Permitting and Inspection Center (MDPIC) at 11805 SW 26 Street. The Contractor shall present a Miami-Dade Fire Rescue permit, City of Miami Department of Fire-Rescue, or Coral Gables Fire Department Permit during application with the Business Office. The deposit fee will be refunded to the Contractor upon return of the meter in a sound satisfactory condition. The largest meter available is 2 inches NPS. Deposits are $2,500 for a 3” meter and $1,500 for a 1” meter, additional service charges may apply., for current fees contact the MDWASD's Business Office at (305) 669-7701. Additional fees may be required by other governmental agencies for utilizing existing sources of water.

C. Water for construction activities will be furnished from adjacent OWNER-owned water mains or the most convenient water source. In instances where no OWNER-owned source of water is available, the Contractor shall make his own arrangements with the municipality or other controlling authority and include the cost of all water required during construction in his overall construction cost. No reimbursement will be made.

D. Contractor shall present a Dade County Fire Department Permit during application with New Customer Division. This requirement may also apply to some municipal areas of Miami Dade County.

E. The deposit fee will be refunded to the Contractor upon return of the meter in a sound satisfactory condition. The largest meter available is 2-inches NPS. Effective October 1, 2007, the required deposit for a 2-inch meter is $2,500.00 plus $125.00 service charge. For current fees contact the MDWASD's New Customer Division at (786) 268-5200. Additional fees may be required by other governmental agencies for utilizing existing sources of water. The Contractor shall bear all cost imposed by other governmental agencies for water use, meter use and all similar fees, at no additional cost to the OWNER. The Contractor shall present a Dade County Fire Department Permit during application with New Business Office.

F. All piping, fittings, valves and equipment, including pumps and power, required for handling the water shall be furnished by the Contractor. Care shall be exercised in the use of the water and provision shall be made to protect the water supply from contamination and indiscriminate use by unauthorized persons. The Contractor shall use <u>only potable water.</u>

G. Under no circumstance shall the Contractor utilize a water source, including existing piping, until such source or piping has been approved for use by the Engineer.

H. In instances where no source of water is available, the Contractor shall make his own arrangements with the municipality or other controlling authority and include the cost of all water required during construction in his overall construction cost. No reimbursement will be made.

1.05 DAMAGE TO EXISTING STRUCTURES AND UTILITIES

A. The Contractor shall be responsible for and make good all damage to pavement, buildings, telephone or other cables, water pipes, irrigation systems, sanitary pipes, or other structures, caused by this Contract, which may be encountered, whether shown or not shown on the Drawings.

B. Information shown on the Drawings as to the location of existing utilities has been prepared from the most reliable data available to the Engineer. This information is not guaranteed, however; and it shall be the Contractor's responsibility to determine the locations, character and depth of any existing utilities. He shall assist the utility companies, by every means possible to determine said locations. Extreme caution shall be exercised to eliminate any possibility of any damage to utilities resulting from his activities.

1.06 MATERIALS AND EQUIPMENT FURNISHED BY THE OWNER

A. No material or equipment will be furnished by the OWNER under this Contract. All material, labor and equipment necessary for completion of the work shall be furnished and installed by the Contractor, whether or not shown on the Plans or specifically mentioned in the Specifications.

B. The OWNER will not furnish electric power for this Project. All electrical driven equipment, including dewatering pumps and electrical welders, shall be served by the temporary electrical service to be provided by the Contractor. The Contractor shall supply extension cords, ground fault circuit interrupters, and transformers, and any safety equipment necessary to protect his workmen and Plant personnel.

1.06 MATERIALS AND EQUIPMENT FURNISHED BY THE CONTRACTOR:

A. The Contractor shall furnish all materials required to complete the construction of the project and related items, ready for service. All fittings and components shall, wherever possible be standard stock The Contractor shall furnish materials listed on the Pre-Approved Product List on the Water and Sewer Department website http://www.miamidade.gov/water/pre-approved-product-list.asp.

B. All material and equipment furnished by the Contractor for incorporation into the Project shall be new and of recent domestic manufacture, and shall be the products of reliable manufacturers who, unless otherwise specified, have been regularly engaged in the manufacture of such material and equipment for at least five (5) years.

C. Unless otherwise specified or noted on the Contract Plans, all steel bolts, nuts, washers and other miscellaneous ferrous metal items (except cast iron or stainless steel) furnished by the Contractor shall be hot-dip galvanized in accordance with ASTM A123, Zinc (Hot-Dip Galvanized) Coatings for Iron and Steel Products, or ASTM A153, Zinc Coating (Hot-Dip) on Iron and Steel Hardware. Where the word galvanized or its abbreviation is used on the Contract Plans or in the Specifications, it shall mean hot-dip galvanized. Fabricated items shall be hot-dip galvanized after fabrication. Internal threads shall be tapped or retapped after galvanizing.

D. All valves, piping, structural steel and miscellaneous materials and equipment shall be stored on blocks or racks. As far as possible, no materials or equipment shall be stored so that it is in direct contact with the ground. All metal shall be thoroughly cleaned before being placed in the work. Storage and protection measures shall be subject to approval of the Engineer whose decision shall be final. The Contractor shall immediately protect materials by different methods, materials and to a greater extent, if so directed by the Engineer in the field.

E. All materials shall, wherever possible be standard stock articles of well known manufacturers. Where the Plans and Specifications designate the products of a particular manufacturer, the product specified or listed as pre-approved has been found suitable for the intended use, articles or products of similar characteristics may be offered for the approval of the Engineer. When substitutions are permitted, the Contractor shall make all necessary changes in adjacent or connected structures and equipment at his expense.

F. Where contemplated changes, substitutions or appurtenant work require engineering design, in the opinion of the Engineer, the Contractor shall have such design services performed at his

expense. Said engineering services shall be of an extent satisfactory to the Engineer whose word shall be final and shall be performed by a Registered Engineer licensed to practice in the State of Florida.

G. The Contractor shall care for and protect against loss or damage all material to be incorporated in the construction, for the duration of the Contract, and shall repair or replace any damaged or lost materials. He shall be relieved of such responsibility only upon final acceptance of all the work by the Engineer.

H. The Contractor shall furnish a covered, weather-protected storage structure providing a clean, dry, noncorrosive environment for all mechanical equipment, electrical equipment, instrumentation equipment and materials, pumps, blowers, and motors to be incorporated into this Project. Storage of equipment shall be in strict accordance with the “instructions for storage” of each equipment supplier and manufacturer including placing of storage lubricants in equipment, etc. Corroded, damaged or deteriorated equipment and parts shall be replaced before acceptance of the project. Equipment and materials not properly stored will not be included in a payment estimate.

I. Store products in accordance with manufacturer’s instructions, with seals and labels intact and legible.

1. Store products subject to damage by the elements in weather-tight enclosures.

2. Maintain temperature and humidity within the ranges required by manufacturer’s instructions.

3. Store fabricated products above the ground, on blocking or skids prevent soiling or staining. Cover products which are subject to deterioration with impervious sheet coverings, provide adequate ventilation to avoid condensation.

J. To insure satisfactory and successful final painting of materials and equipment to be furnished, it is essential that the paints applied in the shop and in the field be mutually compatible. To this end, the Contractor shall require that the shop paint applied to the materials and equipment be compatible with the paint proposed to be used in the field, or shall determine what shop paints have been used and select field paints compatible therewith.

K. The Contractor shall not reuse any of the material removed from existing pipeline systems.

L. The Contractor shall supply certification that all materials supplied that will directly encounter drinking water conform with American National Standards Institute (ANSI)/NSF International (NSF) Standard 61.

M. Extended Warrantees:

1. The Standard Warranty for all completed work, materials and equipment shall be one year from the date of final acceptance. Longer warranties may be required as part of the Contract. Specialty and high value equipment such as pumps, motors, panels, variable frequency drives, switchgears, motor control centers, engines, actuators, roofing systems, and plant process equipment will have the warranty requirement listed on the product specification.
2. The Contractor shall procure extended manufacturer's warranties on equipment furnished by him. These warranties shall be kept in force and extended such that the OWNER

will be provided a manufacturer's warranty with at least one year to run beyond the date of final acceptance of the Project. A copy of the warranty with these provisions clearly stated or with an attached letter of certification from the manufacturer to this effect shall be delivered with the equipment and no payment or partial payment for said equipment will be made until such warranty/certification is delivered to the Engineer.

3. The warranty shall specifically cover the case where the equipment warranted has been replaced by a newer model. In such instance the warranty shall either provide spare parts and service to repair or replace in its entirety the original model, or in lieu of this; provide a complete new model unit to replace the warranted and failing equipment. Should the failing equipment be replaced by a new model, the Contractor shall be responsible for making all necessary changes to adjacent and/or connected equipment at no extra cost to the OWNER and to the satisfaction of the Engineer who's decision shall be final.
4. As a part of final inspection, the Contractor shall deliver to the OWNER in a form satisfactory to the Engineer, either warrantees or certifications of warrantee extensions showing the warrantees to be in effect at least one year beyond the planned date of final acceptance.
5. All costs for procuring, maintaining and extending these warranties shall remain with the Contractor, even in cases where the contract construction time for completion has been extended. These costs shall be included in the Contractor's bid price and no further compensation will be allowed.
6. In instances, as specified in Section 28 "Partial and Final Payment" of the "General Covenants and Conditions"; where the OWNER puts an item of equipment into full productive service prior to final acceptance, the warranty shall still be extended to at least one year past final acceptance. However, the OWNER will reimburse the Contractor for the prorated cost of the extended warranty from the time when the equipment was placed in full productive service to the date of final acceptance based upon the manufacturer's invoice to the Contractor for this cost. Only the warranty cost will be reimbursed, no overhead or other costs will be allowed.

1.07 MANUFACTURER'S EXPERIENCE RECORD:

A. When a manufacturer's experience record is required by these specifications, the following may be provided in lieu of the specified record:

1. Manufacturers and/or equipment which does not meet the specified experience period will be considered if the manufacturer or supplier provides a bond or cash deposit valid for five (5) years less his years of experience, which will guarantee replacement of the equipment or process in the event of failure or unsatisfactory performance or service.

1.08 INCLEMENT WEATHER

A. In the event of inclement weather, all work shall be suspended which might be damaged or rendered inferior by such weather conditions and Contractor will, and will cause Subcontractors to protect carefully the Work and materials against damage or injury from the weather and to protect the public from damage or injury. If, in the opinion of Engineer, any portion of work or materials shall have been damaged or injured by reason of failure on the part of Contractor or any Subcontractors to so protect the Work, such Work and materials shall be removed and replaced at the expense of Contractor.

1.09 SAFETY AND HEALTH REGULATIONS

A. The Contractor shall comply with the Department of Labor Safety & Health Regulations for construction promulgated under the Occupational Safety & Health Act of 1970, (PL 91-596) and under Section 107 of the Contract Work Hours & Safety Standards Act (PL 91-54).

B. All equipment furnished and installed under this Contract shall comply with Part 1910, Occupational Safety & Health Standards & Amendments thereto.

1.10 PROTECTION OF PUBLIC AND PROPERTY

A. Barricades, Guards and Safety Provisions:

1. The Contractor shall be solely responsible for adhering to the rules and regulations of OSHA and appropriate authorities regarding safety provisions. To protect persons from injury and to avoid property damage, adequate barricades, construction signs, lights and guards as required shall be placed and maintained by the Contractor at his expense during the progress of the Work and until it is safe for traffic to use the roads and streets. Material piles, equipment and pipe which may serve as obstructions to traffic shall be enclosed by fences or barricades and shall be protected by proper lights when the visibility is poor.

2. Signage and barricades shall be in accordance with applicable FDOT manuals.

3. During construction, pedestrian corridors shall be maintained in a safe, passable, and stabilized manner. Measures utilized shall include, but not be limited to, boardwalks or stabilized pathways. The Contractor shall be solely responsible for coordination with School Board Transportation Safety Manager for potential construction impacts to schoolyards and crossings or Parks Department for any impacts to parks or trails. Closure of any sidewalks and/or school crossings near schools shall require coordination with the School Board Transportation Safety Manager and written authorization from the OWNER construction is conducted when school is in session.

B. Protection of Utility Structures:

1. Temporary support, adequate protection and maintenance of all underground and surface utility structures including drains, sewers, manholes, hydrants, valves, valve covers, power poles and miscellaneous other utility structures encountered in the progress of the Work shall be furnished by the Contractor at his expense. Any such structures that may have been disturbed shall be restored upon completion of the Work. The OWNERS' valves, hydrants, manholes and other appurtenances shall be made accessible to the OWNERS' personnel during all phases of construction.

C. Open Excavation:

1. All open excavations shall be adequately safeguarded by providing temporary barricades, caution signs, lights and other means to prevent accidents to persons and damage to property. The Contractor shall, at his own expense, provide suitable and safe bridges with handrails and other crossings for accommodating travel by pedestrians and workmen. Bridges provided for access to private property during construction shall be removed when no longer required. The length of open trench will be controlled by the particular surrounding conditions, but shall be limited to 300 feet unless otherwise approved by the OWNER. If the excavation becomes a hazard, or if it excessively restricts traffic at any point, the

OWNER may require special construction procedures such as limiting the length of open trench, fencing, prohibiting excavated material in the street and requiring that the trench shall not remain open overnight. The Contractor shall take precautions to prevent injury to the public due to open trenches. All trenches excavated material, equipment or other obstacles that could be dangerous to the public shall be barricaded and well lighted at night. OSHA Regulations shall apply to all open excavation.

D. Tree and Shrub Protection and Trimming

1. Contractor shall exercise care to protect all trees and shrubs not shown to be removed on construction drawings. Trees and shrubs outside construction limits shall remain and shall be protected and where damaged, restored to original condition. Contractor shall obtain approval from OWNER's Representative prior to removing any trees. Trees damaged within or outside of construction limits due to negligence shall be restored to original condition at the expense of the Contractor.

2. Tree limbs which interfere with construction operations and are approved for pruning shall be neatly cut with sharp pruning instruments; do not break or chop. All cut faces shall be coated with an approved tree pruning compound which is waterproof, antiseptic, elastic and free of kerosene, coal tar, creosote and other substances harmful to plants. Pruning operations shall be extended to restore the natural shape of the entire tree or shrub. Do not allow fires under or adjacent to trees or other plants which are to remain.

3. Contractor shall protect tree and shrub root systems. Do not store construction materials, debris or excavated materials beyond construction limits. Do not permit vehicles or construction equipment beyond the limits of utility line construction. Restrict foot traffic to prevent excessive compaction of soil over root system. Excavated material shall be stockpiled away from tree drip lines as approved by the Engineer. Protect tree and shrub root systems from damage due to noxious materials in solution caused by run-off or spillage during construction operations, or drainage from stored materials. Protect root systems from flooding, erosion or excessive wetting resulting from dewatering operations. Excavate within the drip line of trees only when approved by the Engineer. Where trees are designated to remain within the limits of construction and trenching for utilities is required within tree drip lines, cut roots with sharp pruning instruments; do not break or chop. Paint roots over 2" caliper with approved tree pruning compound.

4. Trees damaged by construction operations shall be repaired promptly after damage occurs to prevent progressive deterioration of damaged trees. Removed trees, branches, roots and other excess materials shall be removed from the construction site to an approved land fill at the expense of the Contractor.

E. Protection of Lawn Areas:

1. Lawn areas shall be left in as good or better condition as before starting of the Work. Where sod is to be removed it shall be carefully restored with new sod of the same type at no additional cost to the OWNER.

F. Restoration of Fences:

1. Any fence, or part thereof, that is damaged or removed during the course of the Work shall

be replaced or repaired by the Contractor at no additional cost to the OWNER and shall be left in as good a condition as before the starting of the Work. The manner in which the fence is repaired or replaced and the materials used shall be subject to the approval of the OWNER.

G. Protection Against Siltation and Bank Erosion:

1. The Contractor shall follow federal, state and local permit requirements.

1.11 SITE CLEANUP AND RESTORATION

A. In addition to the requirements set forth in the General Conditions and Section 01710, the Contractor shall keep the working areas free at all times of tools, materials and equipment not essential to the progress of the Work. Debris, waste materials, and rubbish shall be properly disposed of and not allowed to accumulate. If the Contractor should fail to do this, the OWNER will make the necessary arrangements to effect the cleanup by others and will back charge the cost to the Contractor. If such action becomes necessary on the part of and in the opinion of the OWNER, the OWNER will not be responsible for the inadvertent removal of material which the Contractor would not have disposed of had he effected the required cleanup.

B. Where material or debris has washed or flowed into or been placed in watercourses, ditches, gutters, drains, catch-basins, or elsewhere as result of the Contractor's operations, such material or debris shall be entirely removed and satisfactorily disposed of during progress of the Work, and the ditches, channels, drains etc., kept in a clean and neat condition.

C. On or before the completion of the Work, the Contractor shall, unless otherwise especially directed or permitted in writing, tear down and remove all temporary buildings and structures built by him; shall remove all temporary works, tools, and machinery or other construction equipment furnished by him; shall remove, acceptably disinfect, and cover all organic matter and material containing organic matter in, under, and around privies, houses, and other buildings used by him; shall remove all rubbish from any grounds he has occupied; and shall leave the roads and all parts of the premises and adjacent property affected by his operations, in a neat and satisfactory condition.

D. The Contractor shall restore the entire project site to its original or better condition, with the exception of any area(s) designated for alteration by the Contract Documents. The Contractor shall restore or replace; when and as directed, any public or private property damaged by his work, equipment, or employees to a condition at least equal to that existing immediately prior to the beginning of operations. To this end the Contractor shall do as required all necessary highway or driveway, walk, and landscaping work. Suitable materials, equipment, and methods shall be used for such restoration.

E. The Contractor shall thoroughly clean all materials and equipment installed by him and his subcontractors and on completion of the Work shall deliver it undamaged and in fresh and new appearing condition.

PART 2 - PRODUCTS (Not used)

PART 3 - EXECUTION (Not used)

END OF SECTION

THIS PAGE LEFT INTENTIONALLY BLANK

SECTION 01140

SECURITY

PART 1 - GENERAL

1.01 DESCRIPTION

A. This Section provides for requirements of security, entry control, personnel identification, and miscellaneous restrictions.

1.02 RELATED SECTIONS

A. Section 01010 - Summary of Work

1.03 SECURITY PROGRAM

A. Protect Work, existing premises and OWNER's operations from theft, vandalism, and unauthorized entry.

B. Initiate program in coordination with OWNER's existing security system at job mobilization.

C. Maintain program throughout construction period until OWNER occupancy as directed by Engineer.

1.04 ENTRY CONTROL

A. Restrict entrance of persons and vehicles into project site and existing facilities.

B. Allow entrance only to authorized persons with proper identification.

C. Maintain log of workers and visitors, make available to OWNER on request.

D. Coordinate access of OWNER's personnel to site in coordination with OWNER's security forces.

1.05 PERSONNEL IDENTIFICATION

A. All personnel shall wear clothing bearing the company information of which they are employed.

B. Provide additional security as required by the OWNER.

C. Become familiar with OWNER and Engineer representatives and restrict access to job site to these representatives.

PART 2 - PRODUCTS (NOT USED)

PART 3 - EXECUTION (NOT USED)

END OF SECTION

THIS PAGE LEFT INTENTIONALLY BLANK

SECTION 01150

PRE-CONSTRUCTION CONFERENCE

PART 1 - GENERAL

1.01 General:

A. Prior to commencement of construction, the Contractor shall attend a preconstruction conference which will be held with the OWNER, various utility companies, and other interested parties for the purpose of coordinating the work. All parties to this conference should be prepared to discuss any problems anticipated with the execution of the work. The time and place of meeting will be set by the OWNER.

B. The Contractor is required to cooperate in order to minimize disruption of activities of other contractors. (See Section 01100)

PART 2 - PRODUCTS (Not Used)

PART 3 - EXECUTION (Not Used)

END OF SECTION

THIS PAGE LEFT INTENTIONALLY BLANK

SECTION 01200

PROJECT MEETINGS

PART 1 - GENERAL

1.01 DESCRIPTION

A. The Engineer or Owner's Representative shall schedule and administer preconstruction meetings, periodic progress meetings, and specially called meetings throughout the progress of work. The Engineer shall:

1. Prepare agenda for meetings.
2. Make physical arrangements for meetings.
3. Preside at meetings.
4. Record in writing the minutes; include significant proceedings and decisions.
5. Record the meeting with an audio recording device.
6. Reproduce and distribute copies of minutes within five working days after each meeting:
   a. To participants in the meeting.
   b. To parties affected by decisions made at the meeting.

B. Representatives of contractors, subcontractors and suppliers attending meetings shall be qualified and authorized to act on behalf of the entity each represents.

C. The Contractor shall attend meetings to ascertain that work is executed consistent with Contract Documents and construction schedules.

1.02 RELATED SECTIONS

A. Section 01310 - Construction Schedules.

B. Section 01340 - Shop Drawings, Product Data, and Samples.

C. Section 01720 - Project Record Documents.

D. Other Sections as applicable.

1.03 PRECONSTRUCTION MEETING

A. Schedule a preconstruction meeting no later than 15 days after date of Notice to Proceed.

B. Location: A central site, convenient for all parties designated by the Owner.

C. Attendance:

1. Owner's Representative.
2. Engineer and his Professional Consultants.
3. Resident Project Representative.
4. Contractor's Superintendent.
5. Major Subcontractors.
6. Major Suppliers.
7. Utilities.
8. Others as appropriate.

D. Suggested Agenda:

1. Distribution and discussion of:
   a. List of major subcontractors and suppliers.
   b. Projected Construction Schedule.
2. Critical work sequencing/critical path scheduling.
3. Major equipment deliveries and priorities.
4. Project Coordination.
   a. Designation of responsible personnel.
5. Procedures and processing of:
   a. Field decisions.
   b. Proposal requests.
   c. Submittals.
   d. Change Orders.
   e. Applications for Payments.
6. Adequacy of Distribution of Contract Documents.
7. Procedures for maintaining Record Documents.
8. Use of Premises:
   a. Office, Work and Storage Areas.
   b. Owner's Requirements.
9. Construction facilities, controls and construction aids.
10. Temporary Utilities.

1.04 PROGRESS MEETINGS

A. Schedule regular bi-weekly meetings. The progress meetings will be held as required by progress of the work.

B. Hold called meetings as required by progress of the work.

C. Location of the meetings: Project field office of the Contractor or Engineer.

D. Attendance:

1. Engineer, and his professional consultants as needed.
2. Subcontractors as appropriate to the agenda.
3. Suppliers as appropriate to the agenda.
4. Others as appropriate.

E. Suggested Agenda:

1. Review, approval of minutes of previous meeting.
2. Review of work progress since previous meeting.
3. Field observations, problems and conflicts.
4. Problems which impede Construction Schedule.
5. Review of off site fabrication, delivery schedule.
6. Corrective measures and procedures to regain projected schedule.
7. Revisions to Construction Schedule.
8. Progress, schedule, during succeeding work period.
9. Coordination of schedules.
10. Review submittal schedules; expedite as required.
11. Maintenance of quality standards.
12. Pending changes and substitutions.
13. Review proposed changes for:
    a. Effect on Construction Schedule and on a completion date.
    b. Effect on other contracts of the Project.
14. Other business.
15. Construction schedule.
16. Critical/long lead items.

F. The Contractor is to attend progress meetings and is to study previous meeting minutes and current agenda items, in order to be prepared to discuss pertinent topics such as deliveries of materials and equipment, progress of work, etc.

G. The Contractor is to provide a current submittal log at each progress meeting in accordance with Section 01340.

PART 2 - PRODUCTS (NOT USED)

PART 3 - EXECUTION (NOT USED)

END OF SECTION

SECTION 01152

APPLICATIONS FOR PAYMENT

PART 1 - GENERAL

1.01 DESCRIPTION

A. Submit Applications for Payment to the Engineer and Owner in accordance with the schedule established by Conditions of the Agreement between Owner and Contractor and the Contract Documents.

PART 2 - RELATED SECTIONS

A. Section 01031 – Grades, Lines and Levels

B. Section 01310 - Construction Schedules

C. Section 01370 - Schedule of Values

D. Section 01380 - Construction Photographs

E. Section 01700 - Contract Close Out

F. Section 01720 - Project Record Documents

G. Section 01725 – Project As-Built/Record Drawings

2.02 FORMAT AND DATA REQUIRED

A. Submit applications typed on forms provided by the Owner (or forms provided by Contractor and agreed to by Owner), Application for Payment, with itemized data typed on 8 1/2 inch x 14 inch white paper and continuation sheets.

B. Payment forms shall show significant detail to substantiate request. Additional detail may be required by the Engineer.

2.03 PREPARATION OF APPLICATION FOR EACH PROGRESS PAYMENT

A. Application Form:

1. Fill in required information, including that for Change Orders executed prior to date of submittal of application.

2. Fill in summary of dollar values to agree with respective totals indicated on continuation sheets.

3. Execute certification with signature of a responsible officer of Contract firm.

B. Continuation Sheets:

1. Fill in total list of scheduled component items of work, with item number and scheduled dollar value for each item.

2. Fill in dollar value in each column for each scheduled line item when work has been performed or products stored.

   a. Round off values to nearest dollar, or as specified.

3. List each Change Order Number, and description, as for an original component item or work.

2.04 SUBSTANTIATING DATA FOR PROGRESS PAYMENTS

A. When the Owner or the Engineer requires substantiating data, Contractor shall submit suitable information, with a cover letter identifying:

1. Project

2. Application number and date

3. Detailed list of enclosures

4. For stored products:

   a. Item number and identification as shown on application.

   b. Description of specific material.

   c. Copy of material invoice.

   d. Address of location where item is stored

   e. Photographs of item (if requested)

B. Submit one copy of data cover letter for each copy of application.

C. As a prerequisite for payment, Contractor is to submit the following:

1. A "Surety Acknowledgment of Payment Request" letter showing amount of progress payment which the Contractor is requesting,

2. Updated record drawings for review by the Engineer,

3. Updated construction schedule for review by the Engineer,

4. Construction photographs.

2.05 PREPARATION OF APPLICATION FOR FINAL PAYMENT

A. Fill in Application form as specified for progress payments.

B. Provide FINAL COMPLETION documentation for the final statement of accounting as specified in Section 01700 - Contract Closeout.

C. Submit final record drawings and As-Builts.

2.06 SUBMITTAL PROCEDURE

A. Submit Applications for Payment to the Engineer at the times stipulated in the Agreement.

B. Number: Five copies of each Application.

C. When the Engineer finds Application properly completed and correct, he will transmit certificate of payment to Owner, with copy to Contractor.

PART 3 - PRODUCTS (NOT USED)

PART 4 - EXECUTION (NOT USED)

END OF SECTION

THIS PAGE LEFT INTENTIONALLY BLANK

SECTION 01310

CONSTRUCTION SCHEDULES

PART 1 - GENERAL

1.01 DESCRIPTION

A. Promptly after Award of the Contract and within ten days after the effective date of the Agreement, prepare and submit to the Engineer an estimated construction progress schedules for the work, with sub-schedules of related activities which are essential to its progress.

B. Submit revised progress schedules on a monthly basis.

C. No partial payments shall be approved by the Engineer until there is an approved up to date construction progress schedule on hand.

D. The Contractor shall designate an authorized representative of his firm who shall be responsible for development and maintenance of the schedule and of progress and payment reports. This representative of the Contractor shall have direct project control and complete authority to act on behalf of the Contractor's schedule.

1.02 RELATED SECTIONS

A. Section 01010 - Summary of Work

B. Section 01152 - Applications for Payment

C. Section 01200 - Project Meetings

D. Section 01340 - Shop Drawings, Product Data, and Samples

E. Other Sections as applicable.

1.03 FORM OF SCHEDULES

A. Prepare schedules for submittal each month with pay request. The form of the schedule is to be Microsoft Project or approved equal. The Schedule is to indicate work completed to date and additions to or deletions from the schedule.

1. Provide separate horizontal bar for each trade or operation within each structure or item.
2. Horizontal time scale: In weeks from start of construction and identify the first work day of each month.
3. Scale and spacing: To allow space for notations and future revisions.

B. Format of listings: The chronological order of the start of each item of work for each structure.

C. Identification of listings: By major specification section numbers as applicable and structure.

1.04 CONTENT OF SCHEDULES

A. Construction Progress Schedule:

1. Show the complete sequence of construction by activity.

2. Show the dates for the beginning of, and completion of, each major element of construction in no more than a two week increment scale. Specifically list, but not limited to:

   a. Receiving Materials

   b. Construction Activity

   c. Testing

   d. Restoration

   e. Startup

   f. Record Drawings

   g. Permit Close-out

   h. Punch List

   i. Owner Activities, Including Inspections

3. Show projected percentage of completion for each item, as of the first of each month.

4. Show projected dollar cash flow requirements for each month of construction.

5. Use of float suppression techniques such as preferential sequencing or logic, special lead/lag logic restraints, and extended activity times are prohibited, and use of float time disclosed or implied by use of alternate float-suppression techniques shall be shared to proportionate benefit of the Owner and Contractor.

6. Pursuant to above float-sharing requirement, no time extensions will be granted nor delay damages paid until a delay occurs which (i) impacts Project's critical path, (ii) consumes available float or contingency time, and (iii) extends work beyond contract completion date.

7. If the Contractor provides an accepted schedule with an early completion date, the Owner reserves the right to reduce the duration of the work to match the early completion date by issuing a deductive Change Order at no change in Contract Price.

B. Submittal Schedule for Shop Drawings and Samples in accordance with Section 01340. Must show:

1. The dates for Contractor's submittals.
2. The dates submittals will be required for owner furnished products, if applicable.
3. The dates approved submittals will be required from the Engineer.

C. A list of all long lead items (equipment, materials, etc).

1.05 PROGRESS REVISIONS

A. Indicate progress of each activity to date of submission.

B. Show changes occurring since previous submission of schedule:

1. Major changes in scope.
2. Activities modified since previous submission.
3. Revised projections of progress and completion.
4. Other identifiable changes.

C. Provide a narrative report as needed to define:

1. Problem areas, anticipated delays, and the impact on the schedule.
2. Corrective action recommended, and its effect.
3. The effect of changes on schedules of other prime contractors.

1.06 SUBMISSIONS

A. Submit initial schedules to the Engineer within 10 days after the effective date of the Agreement.

1. The Engineer will review schedules and return review copy within 21 days after receipt.
2. If required, resubmit within 7 days after return of review copy.

B. Submit a minimum of five (5) copies of revised monthly progress schedules with that month's application for payment.

1.07 DISTRIBUTION

A. Distribute copies of reviewed schedules to:

1. Owner (Two copies)
2. Engineer (Two copies)
3. Job Site File (One copy)
4. Subcontractors (As needed)
5. Other Concerned Parties (As needed)

B. Instruct recipients to report promptly to the Contractor, in writing, any problems anticipated by the projections shown in the schedule.

PART 2 - PRODUCTS (NOT USED)

PART 3 - EXECUTION (NOT USED)

END OF SECTION

SECTION 01340

SHOP DRAWINGS, PRODUCT DATA, AND SAMPLES

PART 1 GENERAL

1.01 SCOPE OF WORK

A. The work specified in this Section will not be paid for directly, but will be considered as incidental work. The contractor shall perform this work at no additional cost to the OWNER.

B. The Miami-Dade Water and Sewer Department (MDWASD) established "Pre-Approved Product List" for products to be used in the construction of water and sewer facilities. The "Pre-Approved Product List" lists manufacturer's product models pre-approved by the OWNER which meet the minimum requirements established in the OWNER's design and construction standards and specifications. However, not all products that may be used in the construction of water and sewer facilities that meet the OWNER's design and construction standards and specifications are listed in the "Pre-Approved Product List." The "Pre-Approved Product List" is not an exclusive collection of all qualified and approved products. For those products that are not on the "Pre- Approved Product List," the Contractor shall submit shop drawings as specified herein.

C. Contractors and suppliers can submit the MDWASD "Pre-Approved Product List(s)" for the products that they intend to use in the construction of the water and sewer facilities for the Project. Products listed in the "Pre-Approved Product List" do not require the submittal of shop drawings to the OWNER. The "Pre-Approved Product List(s)" must be stamped, reviewed and initialed by the Contractor and by his engineer, if applicable, prior to submittal to the OWNER. A "Submittal Summary Sheet" must accompany all "Pre-Approved Product List" submittals. Both forms can be found in the Miami-Dade Water and Sewer Department website at www.miamidade.gov/water/pre- approved-product-list.asp.

D. Shop Drawings (including Pre-Approved Product List submittals) shall be submitted prior to any project construction activity. In a timely fashion, well before the contemplated ordering for fabrication of special order or long-lead items or construction use of any standard element of the work, the Contractor shall furnish Shop Drawings for the review and approval of OWNER.

E. It is the Contractor's sole responsibility, upon the first occasion of submittal of a particular element of the work, to submit Shop Drawings of an element which match and fulfill the requirements and intent of the Plans and Specifications. Any delays or costs caused, either directly or indirectly, by non-timely submissions; submission of items differing significantly from the intent of the Plans and/or Specifications; repeated submission of, or argument over, rejected elements or changes required for acceptance; arguments with the criteria or requirements of the Plans or Specifications; or any other such similar activities shall be at the expense of the

Contractor.

F. It is the intent of the Contract Documents that the Contractor shall, in the first instance, submit Shop Drawings of elements which meet or exceed the requirements of the Contract Documents and fit with the other elements of the work and the existing conditions. Delays or the inability to obtain shop drawing approval may subject the Contractor to costs for liquidated or actual damages as specified in the Contract.

G. The approval of Pre-Approved product sheets, shop drawings and data will be general and shall mean that upon examination of the drawings, no variations from the approved project drawings and project requirements have been discovered, and approval will not relieve the Contractor of his responsibilities as defined above. The OWNER's review will not constitute an approval of dimensions, quantities and details of the material, equipment or item shown.

1.02 CONTRACTOR SUBMITTALS

A. The Contractor shall submit a minimum of four (4) hardcopies of the shop drawing submittal package to the OWNER. PDF files of the entire submittal package along with the hard copies are encouraged to simplify the approval process.

B. The Shop Drawing submittal package shall include a transmittal, submittal registry and the pre-approved product list or shop drawing sheets stamped by the Contractor.

C. The Contractor shall meet with the Engineer (Construction Manager) after the Project Award to begin the shop drawing submittal process and establish a schedule for submittal and approval.

D. Where there is a deviation from the Specifications, the Contractor shall note it and state the reasons why a deviation is required.

1.03 DESCRIPTION OF WORK

A. Submit to the Engineer for review and approval, Shop Drawings, test reports and data on materials, equipment, and material samples as required for the proper control of work, and as specified in the Specification sections. Shop Drawings shall be submitted for all materials and equipment to be furnished.

B. After award of the project, the Contractor may begin providing submittals for approval. Submit to the Engineer a complete list of preliminary data on items for which Shop Drawings are to be submitted. Included in this list shall be the names of all proposed manufacturers furnishing specified items. Review of this list by the Engineer shall in no way expressed or implied relieve the Contractor from submitting complete Shop Drawings and providing materials, equipment, etc., fully in accordance with the Specifications. This procedure is required in order to expedite

final review of Shop Drawings.

C. Maintain an accurate updated Shop Drawing submittal log which shall include the following items:

1. Submittal Description and Number Assigned
2. Specification Section
3. Plans Sheet Number
4. Date to Engineer
5. Date Returned to Contractor (from Engineer)
6. Status of Submittal (Approved, Approved as Noted, Rejected/Resubmit)
7. Date of Resubmittal and Return (as Applicable)
8. Date Material Release (for Fabrication)
9. Projected Date of Fabrication
10. Projected Date of Delivery to Site
11. Status of O & M Manuals Submittal

1.04 CONTRACTOR'S RESPONSIBILITY

A. Furnish the Engineer with a schedule of Shop Drawings submittals, fixing the respective dates for the submission of Shop Drawings, the beginning of manufacture, testing and installation of materials, supplies and equipment. This schedule shall indicate those that are critical to the progress schedule.

B. Submit to the Engineer all plans and schedules sufficiently in advance of construction requirements to provide maximum time for checking and appropriate action from the time the Engineer receive them.

C. It is the duty of the Contractor to check and approve all plans, data and samples prepared by or for him before submitting them to the Engineer for review. Each and every copy of the Plans and data shall bear Contractor's stamp showing that they have been checked and approved. Shop Drawings submitted to the Engineer without the Contractor's stamp and approval shall be returned to the Contractor for conformance with this requirement before Engineer's review. **Shop Drawings shall indicate any deviations in the submittal from requirements of the Project Documents and the Contractor shall state the reason why a deviation is required.**

D. All submittals shall be accompanied by a submittal registry and transmittal letter containing the following information:

1. Date
2. Project Title and Number
3. Contractor's name and address
4. The number of each Shop Drawing, Data, and Sample submitted
5. Notification of Deviations from Project Documents
6. Submittal Log Number conforming to and referring to Specification Section

Numbers

E. Submit seven copies of Shop Drawings and of descriptive or product data submittals necessary to complement Shop Drawing. The Engineer will retain five sets.

F. After receiving approval by the Engineer, the Contractor shall be responsible for submitting the Shop Drawings to the Building Department. Shop Drawings of all premanufactured items and all other Shop Drawings are required to obtain approval prior to manufacturing or installing the submitted items. The Contractor shall also be responsible for contesting any interpretations by the Building Department that OWNER considers non-acceptable. The Contractor shall be responsible for all costs, and expenses associated with the submittals, including resubmittals (if any) of Shop Drawings to the Building Department. The Building Department as used in this paragraph shall be taken to mean the City of Opa-Locka Building Department and/or other governing building authority appropriate to this project.

G. Do not begin any of the work covered by a drawing, data, or a sample returned as “Rejected/Resubmit” until a revision or correction thereof has been reviewed and returned to the Contractor, by the Engineer, with approval or approval “As Noted”. Be responsible for and bear all costs of damages which may result from the ordering of any material or from proceeding with any part of work prior to receiving Engineer's approval or approval “As Noted” of the necessary Shop Drawings.

H. Be fully responsible for observing the need for and for making any changes in the arrangement of piping, connections, wiring, manner of installation, etc., which may be required by the materials/equipment the Contractor proposes to supply, both as they pertain to the Contractor’s own work, work of others, or of other Divisions herein or Trades and clearly show such changes on the Shop Drawings.

I. When substitutions in materials or equipment are allowed, the Contractor shall make all necessary changes in adjacent or connected structures and equipment at his expense. Where contemplated changes, substitutions or appurtenant work require engineering design, in the opinion of the Engineer, the Contractor shall have such design services performed at his expense. Said engineering design services shall be of an extent satisfactory to the Engineer whose word shall be final and shall be performed by a Registered Professional Engineer licensed to practice in the State of Florida.

J. When substitutions in materials or equipment are allowed, the Contractor shall be solely responsible for all costs and time required by any differences in construction methods, fabrication or assembly required and no additional time will be allowed.

K. When a construction change, initiated by the Contractor or resulting from a change made by the Contractor, requires re-permitting as discussed in the preceding paragraph, the Contractor shall be responsible for all labor, material and equipment required to redraw the Plan sheet or sheets affected by the change to the satisfac-

tion of the Engineer of Record and OWNER. The costs for all work of this sort and all costs of re-permitting shall be borne by the Contractor and no extra compensation will be allowed.

L. Determine and verify:

1. Field measurements
2. Field construction criteria
3. Catalog numbers and similar data
4. Conformance with specifications
5. That installation and maintenance clearances are sufficient particularly when equipment or arrangement changes have been made

1.05 ENGINEER'S REVIEW OF SHOP DRAWINGS

A. Engineer's review of plans, data and samples, submitted by the Contractor will cover only general conformity to the Drawing and Specifications. The Engineer's review will not constitute an approval of dimensions, quantities, and details of the material, equipment, device, or item shown. The review of plans and schedules will be general, and shall not be construed:

1. As permitting any departure from the Contract requirements
2. As relieving the Contractor of responsibility for any errors, including detail, dimensions, and materials
3. As approving departures from details furnished by the Engineer, except as otherwise provided herein

B. Variations

1. If the plans or schedules, as submitted, describe variations per paragraph 1.03 C, and show a departure from the Contract requirements which Engineer finds to be in the interest of OWNER and to be so minor as not to involve a change in Contract price or time for performance, the Engineer may return the reviewed plans without noting an exception.
2. If the plans or schedules, as submitted, describe variations and show a departure from the Contract requirements which the Engineer finds to be minor enough to be corrected by redlining the submittal, the engineer will mark and return the submittal marked "Approved as Noted." The redlined corrections shall be as binding on the Contractor as would be a resubmission embodying the same corrections.

C. When reviewed by the Engineer, each of the Shop Drawings shall be stamped and dated to indicate it had been reviewed. Shop Drawings stamped "Revise and Resubmit" and with required corrections shown will be returned to the Contractor for correction and resubmittal.

D. Resubmittals will be handled in the same manner as first submittals. On resubmit-

tals the Contractor shall direct specific attention, in writing or on resubmitted Shop Drawings, to revisions and corrections required by the Engineer on previous submissions. The Contractor shall make any corrections required by the Engineer.

E. If the Contractor considers any correction indicated on the Shop Drawings to constitute a change to the Project Plans or Specifications, the Contractor shall give written notice thereof to the Engineer who will render a decision which shall be final. After the decision has been made, the Contractor shall without delay, provide the corrections to the plans.

F. When the Shop Drawings have been approved by the Engineer, the Contractor shall carry out the construction in accordance therewith and shall make no further changes therein except upon written instructions from the Engineer.

G. No partial submittals will be reviewed. Submittals not complete will be returned to the Contractor for resubmittal. Unless otherwise specifically permitted by the Engineer, all submittals shall be made in groups containing all associated items for systems, processes or as indicated in specific specifications sections. All plans, schematics, manufacturer's product data, certifications and other Shop Drawing submittals required by a system specification shall be submitted at one time as a package to facilitate interface checking.

1.06 SHOP DRAWINGS

A. When used in the Project Documents, the term "Shop Drawings" shall be considered to mean Contractor's plans for materials and equipment which become an integral part of the Project. These Shop Drawings shall be complete and detailed. Shop Drawings shall consist of fabrication, erection and setting drawings and schedule drawings, manufacturer's scale drawings, and wiring and control diagrams. Cuts, catalogs, pamphlets, descriptive literature, and performance/test data shall be considered only as supportive to required Shop Drawings as defined above.

B. Manufacturer's catalog sheets, brochures, diagrams, illustrations and other standard descriptive data shall be clearly marked to identify pertinent materials, product or models. Information which is not applicable to the Work shall be deleted by striking or cross hatching.

C. Shop Drawing shall have a submittal registry and display the following:

1. Project Title and Number
2. Name of Project Building or Structure
3. Number and Title of the Shop Drawing
4. Date of Shop Drawing or Revision
5. Name of Contractor and Subcontractor Submitting Drawing
6. Supplier/Manufacturer
7. Separate Detailer when Pertinent

8. Specification Title and Number
9. Specification Section
10. Application Project Drawing Number

D. If plans show variations from Contract requirements because of standard shop practice or for other reasons, describe such variations in the letter of transmittal. If no explanation of these variations is provided, the Contractor shall not be relieved of the responsibility for executing the work in accordance with the Contract, even though such plans have been reviewed and approved.

E. For all mechanical and electrical equipment furnished, provide a list including the equipment name, address of and telephone number of the manufacturer's representative and service company so that service and/or spare parts can be readily obtained.

F. All manufacturers or equipment suppliers who propose to furnish equipment or products shall submit an installation list to the Engineer along with the required Shop Drawings. The installation list shall include at least five installations where identical equipment has been installed and has been in operation for a period of at least five years, unless otherwise specified. Manufacturers and/or equipment which fails to meet the specified experience period will be considered if the manufacturer or supplier provides a bond or cash deposit which will guarantee replacement of the equipment or process in the event of failure or unsatisfactory service.

G. Only the Engineer will utilize the color "red" in marking Shop Drawing submittals.

1.07 REQUIRED INFORMATION

A. Submit, as applicable, the following for all prefabricated or manufactured structural, mechanical, electrical, plumbing, process system, and equipment work:

1. Shop Drawings or equipment drawings, including dimensions, size and location of connections to other work, and weight of equipment
2. Catalog information and cuts
3. Installation or placing plans for equipment, drives, and bases
4. Supporting calculations, signed and sealed by a Florida Registered Engineer when required, for equipment and associated supports, or hangers required or specified to be designed by equipment manufacturers
5. Signed and sealed calculations and plans by in-house Florida Registered Professional Engineer for structural systems, indicating compliance to the structural design criteria specified in the Plans
6. Complete manufacturer's specifications, including materials description and paint system
7. Performance data and pump curves
8. Suggested spare parts with current price information
9. List of special tools required for testing, checking, parts replacement, and maintenance. (Special tools are those which have been specially designed

or adapted for use on parts of the equipment, and are not customarily and routinely carried by maintenance mechanics)

10. List of special tools furnished with the equipment
11. List of materials and supplies required for the equipment prior to, and during startup
12. List of materials or supplies furnished with the equipment
13. Special handling instructions
14. Requirements for storage and protection prior to installation
15. Requirements for routine maintenance required prior to equipment startup
16. List of all requested exceptions to the Project Documents

1.08 SUBMITTAL REQUIRED FOR FOREIGN MANUFACTURED ITEMS

A. In addition to the submittal requirements stated above, suppliers of foreign manufactured items shall submit the names and addresses of companies within the United States that maintain technical service representatives and a complete inventory of spare parts and accessories for each foreign-made item proposed for incorporation into the Work. Failure to prove these capabilities shall be cause for rejection of the foreign manufactured items.

B. Foreign manufactured equipment and materials shall in all cases be clearly and permanently marked with the manufacturer's name and country of origin of the item. The name of the U.S. importing/supplying firm is not acceptable. Shop Drawing submittals of foreign-made items shall be accompanied by written information to include name and location (i.e. country, City, and street address) of the manufacturer. This requirement shall also apply to the foreign made elements of items assembled in this country from parts wholly or partially manufactured overseas.

1. The words, "Permanently Marked" as used in this paragraph shall mean; die stamped, cast-in, welded, or otherwise marked such that the removal of the marking by any mechanical or chemical means will result in obvious permanent damage to the surface marked. These markings shall be on surfaces which are not hidden by assembly.

C. Where specified elsewhere herein or at the sole discretion of the Engineer, whose word shall be final, supply verification of quality, suitability or other aspects, as directed by the Engineer, from a Professional Engineer licensed to practice in the State of Florida or the state where the supplying U.S. firm is located. The verification shall be signed, sealed, and dated. All costs for this verification shall be at the sole expense of the Contractor and no extra compensation will be allowed. Verification by foreign-based engineers, firms, manufacturers, etc. will not be acceptable. Verification by means of a very stringent foreign testing agency/standard (for example ISO 9000 series) may be acceptable. However, this shall again be at the sole discretion of the Engineer and the full burden of proof and satisfaction of OWNER shall rest with the Contractor. No extra time will be permitted due to the requirement for verification and the Contractor has the sole responsibility to make

his submittals with all necessary information in a timely fashion.

1.09 SAMPLES

A. Furnish for the approval of the Engineer, samples required by the Project Documents or required by the Engineer. Samples shall be delivered to the Engineer as specified or directed. The Contractor shall prepay all shipping charges on samples. Materials or equipment for which samples are required shall not be used in work until approved by the Engineer.

B. Samples shall be of sufficient size and quantity to clearly illustrate:

1. Functional characteristics of the product, with integrally related parts and attachment devices
2. Full range of color, texture and pattern
3. A minimum of two samples of each Item shall be submitted

C. Each sample shall have a label indicating:

1. Name of Project
2. Material or Equipment Represented
3. Name of Producer and Brand (if any)
4. Location in Project

D. Prepare a transmittal letter in triplicate for each shipment of samples containing the information specified herein in Paragraph 1.06 A. Enclose a copy of this letter with the shipment and send a copy of this letter to the Engineer. Approval of a sample shall be only for the characteristics or use specified and shall not be construed to change or modify any Contract requirements.

E. Approved samples of the hardware in good condition will be marked for identification and may be used in the work. Materials and equipment incorporated in work shall match the approved samples. Samples which failed testing or were not approved shall be returned to the Contractor at his expense, if so requested at time of submission.

1.10 SUBSTITUTIONS

A. Changes in products, materials, equipment, and methods of construction required by the Contract Documents, which are proposed by the Contractor after award of the Contract, are considered to be requests for substitutions. Where the Plans and/or Specifications designate the products of a particular manufacturer, the product specified has been found suitable for the intended use. Articles or products of similar characteristics may be offered for the approval of the Engineer, whose decision shall be final. Copies of complete descriptive data shall be fur-

nished regarding all materials furnished by the Contractor, consisting of Dimension drawings, catalog references, product data, cost, and other information necessary to clearly identify and evaluate each article. When substitutions are permitted, the Contractor shall make all necessary changes in adjacent, connected, or other structures and equipment at his expense.

B. Where engineer-recommended changes, substitutions or appurtenant work require engineering design, the Contractor shall have such design services performed. Those engineering design services shall be of an extent satisfactory to the Engineer, whose decision shall be final. Engineering services for engineer-recommended changes, substitutions or appurtenant work, shall be performed by a Registered Professional Engineer licensed to practice in the State of Florida.

C Unless specifically authorized by the Engineer in writing, no additional contract time will be allowed, and a decrease in time may be appropriate.

PART 2 PRODUCTS

NOT USED

PART 3 EXECUTION

NOT USED

END OF SECTION

DOCUMENT 01370

SCHEDULE OF VALUES

PART 1 - GENERAL

1.01 DESCRIPTION

A. Submit to the Engineer a Schedule of Values allocated to the various portions of the Work, within 10 days after the effective date of the Agreement.

B. Upon request of the Engineer, support the values with data which will substantiate their correctness.

C. The Schedule of Values shall be used as the basis for the Contractor's Applications for Payment.

1.02 RELATED SECTIONS

A. Section 01152 - Applications for Payment

B. Other Sections as applicable.

1.03 FORM AND CONTENT OF SCHEDULE OF VALUES

A. Present schedule on an 8-1/2 inch x 11 inch white paper; Contractor's standard forms and automated printout will be considered for approval by the Engineer upon Contractor's request. Identify schedule with:

1. Title of Project and location
2. Engineer and Project number
3. Name and Address of Contractor
4. Contract designation
5. Date of submission

B. Schedule shall list the installed value of the component parts to include individual equipment, piping, electrical, construction items, paving, of the Work (as required) in sufficient detail to serve as a basis for computing values for progress payments during construction and for additions and deletions to the Work.

C. For the various portions of the Work:

1. Each item shall include a directly proportional amount of the Contractor's overhead and profit.

D. The sum of all values listed in the schedule shall equal the total Contract Sum.

E. Schedules are subject to Engineer's approval wherein additional line item detail may be required.

PART 2 - PRODUCTS (NOT USED)

PART 3 - PRODUCTS (NOT USED)

END OF SECTION

SECTION 01380

CONSTRUCTION PHOTOGRAPHS AND VIDEO PHOTOGRAPHY

PART 1 GENERAL

1.01 DESCRIPTION OF WORK

A. This section specifies the taking and submission of construction photographs and audio-video photography. The work specified in this Section will not be paid for directly, but will be considered as incidental work. The contractor shall perform this work at no additional cost to the OWNER.

B. Prior to the delivery of any equipment, materials or supplies to the site of any work, or to the beginning of any of the construction work, the Contractor shall provide pre-construction photography as specified herein for the purpose of establishing the surface conditions existing in all of the areas to be affected by the construction of the Project.

C. Ground photography shall consist of photographs and color video taping of surface features taken along the entire length of the Project and including all work, intersecting roadways and properties that will be impacted by the water service conversions.

D. The purpose of the color audio-video taping of the project is to provide the necessary information for restoration of surface features after completion of the Project. The Contractor shall be responsible for repairing any damage or defect not documented as existing prior to construction.

1.02 QUALITY ASSURANCE

A. Photographs shall be clean, sharp and clearly show details. Out-of-focus photographs will not be acceptable.

B. Photographs and/or prints which are poorly lit or lack definition will not be acceptable.

1.03 SUBMITTALS

A. Submit three (3) prints and the digital file of each construction photograph and video as follows:
   1. Within fourteen (14) days of receiving Notice to Proceed.
   2. Enclose each print in a clear Mylar protector punched to fit a standard three ring binder. Prints shall have notes to detail location, date, and existing condition. The prints shall be used to provide documentation of existing conditions in case of claims or disputes.
   3. Number photographs in sequence beginning with the numeral one.

PART 2 PRODUCTS

2.01 SIZE AND QUALITY

A. Standard commercial quality prints, color, 3½-inches by 5-inches, single weight glossy paper.

B. Digital pictures and videos shall be compatible with OWNER software.

2.02 IDENTIFICATION

A. Each print shall be stamped with the following information stamped or typed on the back of the print:

CITY OF OPA-LOCKA
Contract No._____
DESIGN-BUILDER: _____

Photograph No. _____Date: _____Time: _____
Description: _____
_____
_____

2.03 QUANTITY

A. A minimum of twelve photographs shall be taken prior to construction and twelve more each month until completion of the Work.

B. In the instance of a pipeline installation, take a minimum of one photograph each 200 feet or fraction thereof along the entire route of the main initially. During construction a minimum of one photograph every two hundred feet or fraction thereof of that portion of the main constructed during the month until completion.

C. The number of photographs required shall be at the sole discretion of the Engineer whose decision shall be final.

D. An increase in the number of photographs above the minimums shall not be cause for an increase in cost and no extra compensation will be allowed.

2.04 VIDEO PHOTOGRAPHY

A. Color audio-video shall be DVD format or other format acceptable to OWNER.

PART 3 EXECUTION

3.01 INITIAL AND CONSTRUCTION PHOTOGRAPHY

A. Take pre-construction photographs of the entire site or route of the main after receiving the Notice to Proceed and prior to disturbing the site in any manner. Coordinate with the Engineer as to the vantage points and number of photographs required in Paragraph 2.03.

B. Photography During Construction: Coordinate with the Engineer as to the actual number and location of views to be photographed and the day and time of photographing.

C. Photographic equipment utilized shall be of sufficient quality to produce pictures capable of being enlarged without loss of definition or sharpness.

3.02 VIDEO PHOTOGRAPHY

A. Coverage of Taping: Such coverage shall include, but not be limited to, all existing driveways, sidewalks, curbs, streets, signs, landscaping, trees, catch basins, fences, visible utilities and all buildings located within the work zone of the Project. Of particular concern are any existing faults, fractures, defects or other features. Audio description shall be made simultaneously with and support the video coverage.

B. Streets: shall be recorded by audio-video tape for the full width of the right-of-way, except where specifically noted otherwise by the Engineer.

C. Front, Side and Rear Yard Areas: shall be recorded by audio-video tape of properties impacted by the water service conversions.

3.03 LOCATION INFORMATION

A. All DVD's shall be properly identified by number, location and project name in a manner acceptable to the Engineer.

B. A record of the contents of each DVD shall be supplied on a run sheet identifying each segment in the tape by location, i.e., street viewing side, traveling direction, engineering stationing, and all referenced by tape counter numbers.

C. All video recordings shall begin with the date and time of recording, the project name, the sheet numbers of engineering stationing as shown on the plans, the name of the street, area or building being taped, the direction of travel and the viewing side. Houses and buildings shall be identified visually by house or building address, when possible, in such manner that the progress of the taping and the proposed system may be located by reference to the houses and buildings.

3.04 SITE RECORDING CONDITIONS

A. All audio-video taping shall be done during times of good visibility. No outside taping shall be done during periods of visible precipitation or when the ground area is covered with leaves or debris, unless otherwise authorized by the Engineer.

B. In order to produce the proper detail and perspective, adequate auxiliary lighting will be required to fill in shadow areas caused by trees, utility poles, road signs and other such objects, as well as other conditions requiring artificial illumination.

C. The average rate of speed in the general direction of travel of the conveyance used during taping shall not exceed 60 feet per minute. Planning rates and zoom-out rates shall be controlled sufficiently so that playback will produce adequate clarity of the object being viewed.

D. When conventional wheeled vehicles are used as conveyances for the taping, the distance from the camera lens to the ground shall be such as to ensure proper perspective. In instances where tape coverage will be required in areas not accessible to conventional wheeled vehicles, such coverage shall be obtained by walking or by special conveyance approved by the Engineer but with the same requirements for tape quality and content as specified herein, except as may be specifically exempted by the Engineer.

END OF SECTION

SECTION 01410

TESTING AND TESTING LABORATORY SERVICES

PART 1 - GENERAL

1.01 DISCRIPTION

A. Contractor shall employ and pay for the services of an independent testing laboratory to perform materials and installation testing of the type and frequency specified in the Contract Documents including, but not limited to, Geotechnical Testing Services and concrete testing.

B. Geotechnical Testing Services shall include, but not be limited to, periodic site inspections, soil proctor tests, soil classification tests and soil densities or compaction tests.

C. The engineer may, at any time, elect to have materials and equipment tested for conformity with the Contract Documents.

D. Contractor shall include cost of testing in the Contract Price.

E. Piping pressure test and bacteriological testing shall be in accordance with the applicable Section.

1.02 RELATED SECTIONS

A. Other Sections as applicable.

1.03 REFERENCES

A. FDOT Standard Specifications for Road and Bridge Construction.

B. Miami-Dade County Public Works Minimum Standards

1.04 LIMITATIONS OF AUTHORITY OF TESTING LABORATORY

A. Laboratory is not authorized to:

1. Release, revoke, alter or enlarge on requirements of Contract Documents
2. Approve or accept any portion of the Work
3. Perform any duties of the Contractor

PART 2 - PRODUCTS (NOT USED)

PART 3 - EXECUTION

3.01 CONTRACTOR'S RESPONSIBILITIES

A. Provide all testing required by the Contract Documents as well as laws, ordinances, rules, regulations, orders, or approvals of public authorities.

B. Employment of the laboratory shall in no way relieve Contractor's obligations to perform the Work of the Contract.

C. Cooperate with laboratory personnel, and provide access to Work and to Manufacturer's operations.

D. Secure and deliver to the laboratory adequate quantities of representational samples of materials proposed to be used and which require testing.

E. Provide to the laboratory the preliminary design mix proposed to be used for concrete and other materials mixes which require control by the testing laboratory.

F. Materials and equipment used in the performance of work under this Contract are subject to inspection and testing at the point of manufacture or fabrication. Standard specifications for quality and workmanship are indicated in the Contract Documents. The Engineer may require the Contractor to provide statements or certificates from the manufacturers and fabricators that the materials and equipment provided by them are manufactured or fabricated in full accordance with the standard specifications for quality and workmanship indicated in the Contractor Documents. All costs of this testing and providing statements and certificates shall be a subsidiary obligation of the Contractor, and no extra charge to the Owner shall be allowed on account of such testing and certification.

G. Furnish incidental labor and facilities:

1. To provide access to Work to be tested
2. To obtain and handle samples at the Project site or at the source of the product to be tested
3. To facilitate inspections and tests
4. For storage and curing of test samples

H. Notify laboratory sufficiently in advance of operations to allow for laboratory assignment of personnel and scheduling of tests.

1. When tests or inspections cannot be performed after such notice, reimburse Owner for laboratory personnel and travel expenses incurred due to Contractor's negligence.

I. Employ and pay for the services of the same or a separate, equally qualified independent testing laboratory to perform additional inspections, sampling, and testing required for the Contractor's convenience.

J. If the Owner requests tests in addition to those specified in the contract, and if the test results indicate the material or equipment complies with the Contract Documents, the Owner shall pay for the cost of the testing laboratory. If the tests and any subsequent retests indicate the materials and equipment fail to meet the requirements of the Contract Documents, the Contractor may pay for the laboratory costs directly to the testing firm or the total of such costs shall be deducted from any payments due the Contractor.

K. The Contractor shall pay costs for additional trips to the project by the agency when scheduled times for tests and inspections are canceled and agency is not notified sufficiently in advance of cancellation to avoid the trip.

3.02 TESTING

A. The Contractor shall obtain the services of a professional testing laboratory approved by the Engineer to perform the following type of tests and test frequencies. Copies of all reports are to be sent to the Engineer as soon as possible.

B. Density tests for trench backfill at a minimum rate of three (3) tests per lift in 1,000 feet of trench, but not less than two (2) tests per lift if less than 500 feet of trench, at Engineer's discretion based on field observation.

C. Density tests for subgrade compaction at a minimum rate of three (3) tests in 1,000 feet of roadway, but not less than two (2) tests, at Engineer's discretion based on field observation.

D. Density tests for limerock base at a minimum rate of three (3) tests per day on each course of completed compacted base, but not less than two (2), at Engineer's discretion based on field observation.

E. Density tests for roadway crossings at the rate of one test per lane per lift of compacted material, beginning one foot above the normal water table.

F. If in the opinion of the Engineer, suitable compaction has not been achieved around structures, density tests may be required.

G. Concrete compressive strength at the rate of three (3) cylinders per the lesser of 50 cubic yards or per day.

H. Should the above test results indicate deficiencies, the Engineer may order additional tests at the Contractor's expense, and all reworked areas shall be retested at the Contractor's expense.

I. Testing in the County right-of-way shall meet the requirements of the Florida Department of Transportation.

END OF SECTION

THIS PAGE LEFT INTENTIONALLY BLANK

SECTION 01581

PROJECT SIGNS

PART 1 GENERAL

1.01 SCOPE OF WORK

A. Project Signs.

1. OWNER Responsibility: To supply, erect and remove signs.
2. Contractor Responsibility: To maintain signs and restore site.

PART 2 PRODUCTS

2.01 PROJECT SIGNS

A. Signs will be supplied, installed, and at the end of construction, removed by OWNER forces. During the construction period, the Contractor shall maintain the signs in good condition, satisfactory to the Engineer. Should the signs be defaced, damaged or destroyed, the Contractor shall be responsible for their repair or replacement to the satisfaction of the Engineer and no extra compensation will be allowed.

PART 3 EXECUTION

3.01 MAINTENANCE

A. Maintain signs and supports and repair all damages to the satisfaction of the Engineer.

B. Restore site to original condition upon completion of Project.

END OF SECTION

THIS PAGE LEFT INTENTIONALLY BLANK

SECTION 01600

MATERIAL AND EQUIPMENT SHIPMENT, HANDLING, STORAGE, AND PROTECTION

PART 1 GENERAL

1.01 SCOPE OF WORK

A. This shall include both OWNER and Contractor supplied material and equipment.

B. The Contractor is to inform all subcontractors, suppliers, and manufacturers of the requirements herein specified and shall include expenses for the following services in his costs for compliance with the requirements hereinafter specified.

1.02 PREPARATION FOR SHIPMENT

A. When practical, equipment shall be factory-assembled. The equipment parts and assemblies that are shipped unassembled shall be furnished with assembly plan and instructions. The separate parts and assemblies shall be factory match-marked or tagged in a manner to facilitate assembly. All assemblies are to be made by the Contractor at no additional cost to OWNER.

B. Machined and unpainted parts subject to damage by the elements shall be protected with an application of a strippable protective coating, or other approved protective method.

C. Equipment shall be packaged or crated in a manner that will provide protection from damage during shipping, handling, and storage.

D. The outside of the package or crate shall be adequately marked or tagged to indicate its contents by name and equipment number, if applicable; approximate weight; state any special precautions for handling; and indicate the recommended requirements for storage prior to installation.

1.03 PACKING AND DELIVERY OF SPARE PARTS AND SPECIAL TOOLS

A. Properly mark to identify the associated equipment by name, equipment, and part number. Parts shall be packaged in a manner for protection against damage from the elements during shipping, handling, and storage. Ship in boxes that are marked to indicate the contents. Delivery of spare parts and special tools shall be made prior to the time associated equipment is scheduled for the initial test run.

1.04 SHIPMENT

A. All equipment and material shall be shipped with freight and shipping paid FOB

jobsite.

B. The Contractor shall request a 7-day advance Notice of Shipment from manufacturers, and, upon receipt of such notice, provide the Engineer with a copy of the current delivery information concerning equipment items and material items of critical importance to the project schedule.

C. Schedule delivery to reduce long term on-site storage prior to installation and/or operation. Under no circumstances shall equipment be delivered to the site more than one month prior to installation without written authorization from the Engineer.

D. Coordinate delivery with installation to ensure minimum holding time for items that are hazardous, flammable, easily damaged or sensitive to deterioration.

1.05 RECEIVING

A. The Contractor shall unload and record the receipt of all equipment and materials at the jobsite.

B. All costs for receiving, inspection, handling, storage, insurance, inventory control, and equipment maintenance for both for both the Contractor-supplied and OWNER-supplied materials and equipment shall be included in the prices bid and no extra compensation will be allowed.

1.06 INSPECTION

A. Immediately upon receipt of equipment and materials at the jobsite, the Contractor shall inspect for completeness and any evidence of damage during shipment. OWNER's supplied equipment and material shall be inspected and inventoried together with OWNER's inspector. Should there appear to be any shortage or damage, the Engineer shall be immediately notified; and the Contractor shall be fully responsible for informing the manufacturers and the transportation company of the extent of the shortage or damage. If the item or items require replacing or supplying missing parts, the Contractor shall take the necessary measures to expedite the replacement or supply of the missing parts.

1.07 HANDLING

A. Equipment and materials received for installation on this Project shall be handled in accordance with the manufacturer's recommendations, and in a manner that will prevent damage.

B. Pipe and fittings shall at all times be handled with great care to avoid damage. In loading and unloading, they shall be lifted with cranes or hoists or slid or rolled on skidways in such a manner as to avoid shock. Under no circumstances shall this material be dropped or allowed to roll or slide against obstructions. No cables, lifting arms, hooks or other devices shall be inserted into the pipe or fitting. All

lifting, pulling or pushing mechanisms shall be applied to the exterior of the pipe or fitting. Pipe and other material shall be distributed along the right-of-way in advance of installation only to the extent approved by the Engineer. Pipe shall be stored on blocking or timber. It shall not be stored on rocks, boulders, or other supports which in the opinion of the Engineer are unsuitable. Such materials shall be so placed as to keep obstruction to traffic to a minimum.

1.08 STORAGE AND PROTECTION

A. Equipment and materials shall be stored prior to installation as recommended by the manufacturer. Generally, materials such as pipe shall be stored off the ground in approved storage yards or along the line of the proposed pipeline as approved by the Engineer. Items subject to the damage by the elements, vandalism, or theft shall be stored in secure buildings. Items requiring environmental control for protection shall be provided with the necessary environmentally controlled storage facilities at no cost to OWNER.

B. Store and protect products in accordance with the manufacturer's instructions, with seals and labels intact and legible. Storage instructions shall be studied by the Contractor and he shall review them with the engineer. Instructions shall be carefully followed and a written record of this kept by the Contractor. Arrange storage to permit access for inspection.

C. Store loose granular materials on solid flat surfaces in a well-drained area. Prevent mixing with foreign matter.

D. Cement and lime shall be stored under a roof and off the ground and shall be kept completely dry at all times. All structural, miscellaneous and reinforcing steel shall be stored off the ground or otherwise to prevent accumulations of dirt or grease, and in a position to prevent accumulations of standing water and to minimize rusting. Beams shall be stored, the webs vertical. Precast concrete shall be handled and stored in a manner to prevent accumulations of dirt, standing water, staining, chipping or cracking. brick, block and similar masonry products shall be handled and stored in a manner to reduce breakage, cracking and spalling to a minimum.

E. All mechanical, electrical and other equipment, instruments and other items subject to damage if stored outdoors (even though covered by canvas) shall be stored in a weather tight building to prevent injury. The building, even if temporary, must be satisfactory to the Engineer. Building shall be provided with adequate ventilation to prevent condensation. Maintain temperature and humidity within range required by manufacturer.
   1. All equipment shall be stored fully lubricated with oil, grease and other lubricants unless otherwise instructed by the manufacturer.
   2. Moving parts shall be rotated a minimum of once weekly to insure proper lubrication and to avoid metal-to-metal "welding". Upon installation of the equipment, the Contractor shall start the equipment at least half load, once

weekly for an adequate period of time to ensure that the equipment does not deteriorate from lack of use.

3. Lubricants shall be changed upon completion of installation and as frequently as required thereafter during the period between installation and acceptance. New lubricants shall be put into the equipment at the time of final acceptance.
4. Prior to final acceptance of the equipment, the Contractor shall have the manufacturer inspect the equipment and certify that its condition has not been detrimentally affected by the long storage period. Such certifications by the manufacturer shall be deemed to mean that the equipment is judged by the manufacturer to be in a condition equal to that of equipment that has been shipped, installed, tested and accepted in a minimum time period. As such, the manufacturer will guaranty the equipment equally in both instances. If such a certification is not given, the equipment shall be judged to be defective. It shall be removed and replaced at the Contractor's expense.

F. All bolts, nuts, gaskets and other joint materials for use in pipelines shall be stored under cover.

G. Gaskets shall be stored in their original packing bags or containers, and care shall be exercised to keep them away from heat, light, oil gasoline or other petroleum products. Gaskets shall be kept clean at all times and not handled with greasy or dirty hands.

H. Plastic pipe and other elastomeric products shall be stored under cover to preclude damage by ultraviolet radiation even if the product has UV inhibitors in its compound.

I. Valves and other equipment having heating elements to eliminate moisture accumulation shall be supplied with electrical power of the required characteristics.

1.09 INSURANCE

A. The Contractor's insurance shall adequately cover the value of materials delivered but not yet incorporated into the work. The Contractor and OWNER shall be named as co-insured insofar as their respective interests may appear. Proof of this coverage must be submitted to the Engineer at the time request for progress or partial payments.

1.10 INVENTORY CONTROL

A. Equipment and materials shall be stored in a manner to provide easy access for inspection and inventory control. The Contractor shall keep a running account of all materials in storage to facilitate inspection and to estimate progress payments for materials delivered but not installed in the work.

1.11 EQUIPMENT MAINTENANCE PRIOR TO OWNER'S ACCEPTANCE

A. Provide the required or manufacturer's recommended maintenance during storage, during the installation, and until such time as OWNER accepts the equipment for full-time operation.

1.12 SALVABLE EQUIPMENT

A. Any salvable pipe, fitting, or other miscellaneous material or equipment removed during construction and not reused in the work shall be cleaned, hauled, and stored by the Contractor at his own expense, where directed by the Engineer, and shall remain the property of OWNER. All other material shall be disposed of by the Contractor at his own expense.

PART 2 PRODUCTS

NOT USED

PART 3 EXECUTION

NOT USED

END OF SECTION

SECTION 01700

CONTRACT CLOSEOUT

PART 1 GENERAL

1.01 SCOPE OF WORK

A. Work Included: This section outlines the procedure to be followed in closing all contracts.

1.02 RELATED SECTION

A. Section 01340 - Shop Drawings, Product Data, and Samples.

B. Section 01720 - Project Record Documents.

C. OPA-LOCKA General Covenants and Conditions

1.03 FINAL INSPECTIONS

A. OWNER will not issue preliminary punchlists. After final cleaning and upon written notice from the Contractor that he has inspected the work and it is a 100% completed, the Engineer will make a preliminary inspection with OWNER and the Contractor present. Upon completion of this preliminary inspection, the Engineer will submit to the Contractor a written final punchlist of any particulars which this inspection reveals as defective or incomplete work.

B. Upon receiving written notice from the Engineer, the Contractor shall immediately undertake the work required to remedy the defects and complete the work to the satisfaction of OWNER.

C. The items identified to be completed shall constitute the Punch List. The Construction Manager and the Contractor shall have seven calendar days from the date of substantial completion to create the Punch List. When the Contractor successfully completes all identified items to the satisfaction of the Engineer in accordance with the Contract Documents, the Contractor may submit a payment request for all remaining retainage withheld for the Project. Each item in the punchlist shall have a time duration agreed upon by both parties. Punchlist items may be eliminated individually from the list when approved by the Engineer.

D. Should the Contractor not successfully complete any items contained in the Punch List or if a good-faith dispute exists as to whether one or more items identified on the list have been completed pursuant to the Contract, the Construction Manager may elect to continue to withhold an amount not to exceed 150 percent of the estimated total costs to complete such items and release the remaining retainage.

E. When the Contractor has corrected or completed the items as listed in the Engineer's written notice, inform the Engineer, in writing, that the required work

has been completed. Upon receipt of this notice, the Engineer, in the presence of the Contractor, shall make the final inspection of the Project.

F. Should the Engineer find all work satisfactory at the time of the inspection, the Contractor will be allowed to make application for final payment in accordance with the provisions of the General Covenants and Conditions.

1. If the Contractor fails to complete any item of work within a time period equal to 100% of the agreed upon duration of time for all individual items, the Engineer will notify the Contractor in writing specifying the conditions pertaining thereto and directing the Contractor to comply with his directive. If the Contractor has not corrected such condition within 5 days of such notice, it shall be sufficient grounds for the Engineer to order the subject items discontinued and have them completely remedied in a timely manner at the expense of the Contractor.
2. No final estimate shall be issued by the Engineer until the Engineer has assured himself that the punch list has been 100% completely finished and all other related documents are submitted.

1.04 FINAL SUBMITTALS

A. No Contract will be finalized until all of the following have been submitted and approved in conformance with Section 01340 - Shop Drawings, Product Data, and Samples, and Section 01720 - Project Record Documents.
1. Final Shop Drawings.
2. Record Drawings.
3. Interface Information.
4. Operation and Maintenance Manuals.
5. Maintenance Summaries.
6. Manufacturers' Certificates of Proper Installation.
7. Material Tests and Certifications.
8. All Test Reports.

1.05 GUARANTEES, BONDS, AND AFFIDAVITS

A. No Contract will be finalized until all guarantees, bonds, certificates, licenses, roofing warranty, C.O. and affidavits required for work or equipment as specified are satisfactorily filed with the Engineer.

B. The Contractor shall comply with the Public Records Laws of the State of Florida.

1.06 ACCESSORY ITEMS

A. All contractors furnishing and/or installing equipment and spare parts on this Project shall provide to OWNER, upon acceptance of the equipment, all special accessories required to place each item of equipment in full operation. These special accessory items include, but are not limited to, adequate oil and grease as required for the first lubrication of the equipment, light bulbs, fuses, wrenches, valve keys, handwheels, chain operators for valve handles more than 6 feet above floor, and other expendable items as required for initial startup and operation of all

equipment.

1.07 SUBSTANTIAL COMPLETION

A. “Substantial Completion” shall occur when the work is in a state of final completion as regards all aspects of occupancy, ingress, egress, habitability, functionality and efficiency thereof, safety, durability and interaction with other existing or contemplated systems, and is otherwise substantially fit for use or operation. Any work remaining after substantial completion shall be of a minor nature such that should the OWNER elect to occupy and put into full service the facility constructed under the Project, or any portion thereof, said work may be accomplished without interference to an extent causing loss of efficiency to any of the above required aspects. The date of substantial completion is the date certified by the Architect/Engineer and approved by OWNER (if different from the A/E) when construction is sufficiently complete to satisfactorily fulfill all of the above requirements. If any portion of the Contract Documents specifies a particular measure of substantial completion for the work, in whole or in part, that definition shall take precedence of this section.

1.08 FINAL COMPLETION

A. “Final Completion” shall occur when the work is in a state such that no further work is required in accordance with the Contract Documents to render complete, satisfactory and acceptable to OWNER all construction services purchased, including those for any pending items whether or not they were listed after substantial completion, and provide all manuals, certifications, warrantees, as-built Plans, release of liens, certified payrolls, and any other documentation required by OWNER or other governing authority. If any portion of the Contract Documents specifies a particular measure of final completion for the work, in whole or in part, that definition shall take precedence of this section.

PART 2 PRODUCTS

NOT USED

PART 3 EXECUTION

NOT USED

END OF SECTION

THIS PAGE LEFT INTENTIONALLY BLANK

SECTION 01710

CLEANING

PART 1 GENERAL

1.01 SCOPE OF WORK

A. This Section specifies the maintenance of the work site in a clean, orderly, hazard-free condition. Execute cleaning during progress of the Work, and at completion of the Work, as required by General Conditions.

1.02 QUALITY ASSURANCE

A. Conduct cleaning and disposal operations in accordance with local ordinances and anti-pollution laws. Rubbish, volatile wastes, and other construction wastes shall be neither burned nor buried on the work site, and shall not be disposed of into storm drains, sanitary drains, streams or other waterways.

B. Final cleaning shall be accomplished either by workmen experienced in cleaning operations or by professional cleaners.

1.03 DISPOSAL REQUIREMENTS

A. Conduct cleaning and disposal operations to comply with local codes, ordinances, regulations, and anti-pollution laws. Do not burn or bury rubbish or waste materials on Project site. Do not dispose of volatile wastes, such as mineral spirits, oil, or paint thinner, in storm or sanitary drains, Volatile wastes shall be disposed in accordance with proper laws and be approved by the OWNER. Do not dispose of wastes into streams or waterways.

PART 2 PRODUCTS

2.01 ON-SITE WASTE CONTAINERS

A. Provide on-site waste containers for collection of waste materials, debris and rubbish. See Section 01100 - Special Project Procedures, Subsection 1.05 regarding Safety Requirements for environmentally hazardous materials.

2.02 CLEANING MATERIALS

A. Cleaning materials shall be as recommended by the manufacturer of the surface to be cleaned.

PART 3 EXECUTION

3.01 SAFETY REQUIREMENTS

A. Maintain work site in accordance with local ordinances and anti-pollution laws

applicable to work site cleanliness and in a neat, orderly and hazard-free condition until final acceptance of the work. Catwalks, accessible underground structures, work site sidewalks and walkways adjacent to the work site shall be kept free from hazards caused by construction activities.

B. Store volatile wastes including rags in covered metal containers, and remove from work site daily.

C. Prevent accumulations of wastes which create hazardous conditions.

D. Artificially ventilate spaces which are not naturally ventilated when volatile or noxious substances are present in those spaces.

3.02 CLEANING DURING CONSTRUCTION

A. Perform cleaning every workday for duration of the Work. Structures, grounds, and areas of the work site, access roads and adjacent public and private properties shall be maintained free from accumulations of waste materials and rubbish caused by construction operations on the work site. Place waste materials and rubbish in on site containers or as otherwise approved. Unneeded construction equipment shall be removed and all damaged repaired so that the public and property owners will be inconvenienced as little as possible.

B. Remove or secure loose material on open decks and on other exposed surfaces at end of each day's work or more often to maintain work site in hazard-free condition.

C. Prevent dislodgement of materials due to wind and other forces. Wet down dry materials and rubbish to lay dust and prevent blowing dust. Cover or wet excavated material leaving and arriving at the site to prevent blowing dust. Clean the public access roads to the site of any material falling from the haul trucks.

D. Empty on-site waste containers whenever necessary so that trash overflow does not occur. Legally dispose of contents at either public or private dumping areas.

E. Control the handling of materials, debris and rubbish; do not drop or throw from heights.

F. Immediately remove spillages of construction-related materials from hauling routes or the site.

G. Where material or debris has washed or flowed into or been placed in existing watercourses, ditches, gutters, drains, pipes, structures, or elsewhere during the course of the Contractor’s operations, such material or debris shall be entirely removed and satisfactorily disposed of during the progress of the work, and the ditches, channels, drains, pipes, structures, and work, etc., shall, upon completion of the work, be left in a clean and neat condition.

3.03 FINAL CLEANING

A. In addition to the cleaning performed above, in preparation for final inspection, remove grease, dust, dirt, rust stain from surfaces. Remove labels, fingerprints and other foreign materials from exposed exterior finished surfaces. Flush down all manhole covers and frames, valve boxes, and areas leaving such surfaces clean of all sand, laitances, etc.

B. In preparation for final acceptance or occupancy, conduct final inspection and cleaning of exposed exterior surfaces, and of concealed spaces.

C. Maintain cleaning operations until project has been finally accepted.

END OF SECTION

THIS PAGE LEFT INTENTIONALLY BLANK

SECTION 01720

PROJECT RECORD DOCUMENTS

PART 1 GENERAL

1.01 DESCRIPTION

A. Scope of Work: The work specified in this Section will not be paid for directly, but will be considered as incidental work. The contractor shall perform this work at no additional cost to the OWNER. For contracts where the work is performed at an on-site location maintain one record copy of:

1. Record Drawings. Record Drawings as used herein shall mean a drawing that accurately records constructed improvements and any field changes.
2. Record Specifications.
3. Addenda.
4. Change Orders and other modification of the contract.
5. Engineer's written orders or instructions.
6. Approved Shop Drawings, Product Data and Samples.
7. Field Test records.
8. Construction photographs.
9. As built dimensions and elevations as recorded by the Contractor's Florida Licensed Professional Surveyor and Mapper (PSM) on a daily basis.
10. Field Book. Survey Field notes taken by the Florida Licensed Professional Surveyor and Mapper’s survey crew (copy provided to the Engineer on a monthly basis).

B. The records listed above are to be made available to the Engineer at all times for all projects.

C. Related Requirements Described Elsewhere:

1. Section 01340: Shop Drawings, Product Data and Samples.

1.02 MAINTENANCE OF DOCUMENTS AND SAMPLES

A. Maintain documents in a clean dry, legible, condition and in good order. Do not use record documents for construction purposes.

1.03 REQUIRED MEASUREMENTS

A. Set-up and Verification: The Contractor’s Florida Licensed Professional Surveyor and Mapper is required to recover the design baseline and verify the elevations and coordinates on a regular basis as needed.

B. The Contractor is required to have a level instrument setup next to the construction site in order to control the vertical alignment of the pipe installation

prior to trench backfilling. The level shall be setup daily for use by the surveyor, Contractor's foreman and OWNER Engineer/Inspector. Any underground construction work that does not have a level properly setup will be stopped by the OWNER Engineer/Inspector.

C. The Contractor is required to have a survey crew record the field information on a daily basis when there is underground pipe installation. The survey crew shall be on-site as needed to record and verify the information before it is covered. Any underground construction work that does not have the information recorded by a survey crew will be stopped by the OWNER Engineer/Inspector. The Engineer/Inspector has the authority to order re-excavation of work that was covered without accurate survey measurements.

D. Field Book Information: The Florida Licensed Professional Surveyor and Mapper is required to have his crews make daily visits to the project site during underground pipe installation work to perform field measurements of the Contractor's daily installations. This information shall be recorded in field books. Copies of the field notes are required to be provided to the Construction Manager on a monthly basis. The surveyor's field notes of the surveyor shall be submitted to the OWNER along with partial as-builts plans (signed and sealed) on a monthly basis as a condition of payment.

1.04 PROJECT RECORDS

A. During the life of the Contract the Contractor shall retain the services of a Florida Licensed Professional Surveyor and Mapper (PSM) who shall maintain daily records of the installation, including all deviations from Plans and Specifications and for the purposes of preparing and submitting to the OWNER an as-built/record survey in compliance with:

1) Florida Statutes Chapter 472.027.

2) Florida Administrative Code Chapter 5J-17.050, 5J-17.051 and 5J-17.052

3) As further required by these Contract Documents.

B. The Measure and Recording of all information required in Subsection A above for all projects concurrently with construction progress. The services of the Florida Licensed Professional Surveyor and Mapper for the project shall be retained by the Contractor prior to the issuance of the Notice to Proceed. A letter from the Florida Licensed Professional Surveyor and Mapper shall be provided at the preconstruction meeting indicating that the Contractor has secured his services to perform all survey work for the duration of the project and prepare final as-builts plans.

C. Submit redlines, partially completed as-built plan sheets and fully complete as-built Plan sheets and certified copies of field book information to include raw data of the measurements all as required by and satisfactory to, the Engineer as

prerequisite for the acceptance of monthly payment applications.

D. Label each document "PROJECT RECORD" in neat large printed letters.

1. Record all information for pipeline projects and on-site projects concurrently with construction progress.

2. Do not conceal any work until as-built information is recorded by the Contractor's surveyor.
3. All locations for future connections or tie-ins shall be left unburied and uncovered until the Contractor's PSM measures and records the as-built information.

    a. All as-built and inspector information is to be made available to the Engineer on a daily basis for inclusion in the OWNER records.

4. Restrained pipe, end line valves, thrust blocks shall be left uncovered for the last complete length. Inline valves and tees shall be left exposed for 1 length on both sides plus the face end. Measure and record the elevation, horizontal and vertical alignment, and the inclination for these items.
5. For all projects, the Contractor's PSM shall maintain exact and extensive records of any deviations from Drawings and Specifications. These records shall be satisfactory to the Engineer, whose decision shall be final, and sufficient to allow the production of accurate as built Plans which correctly and completely portray the work as constructed.

6. For all projects, the Contractor's PSM shall record data as follows during the entirety of construction.

    a. For facility (e.g. a water or sewage plant, pumping station, or similar site, if so designated by OWNER) projects, record as-built dimensions and elevations every twenty-five feet (25') or portion thereof along pipeline and at every abrupt change in direction of the new line.
    b. For pipeline projects, constructed in the public right-of-way, record dimensions and elevations every one hundred feet or portion thereof along the pipeline and at every horizontal and vertical change in direction.
    c. In all cases, record locations and elevations for each valve, fitting, service line, fire hydrant, water sampling point, utility poles adjacent to the proposed line, overhead wires crossing the ditch line (approximate height above grade) and other appurtenances along the pipeline.
    d. The identity, dimensions, location, and elevation of any existing utility crossing the proposed line and so immediately adjacent to the new line as to be exposed by the excavation, shall also be

recorded. Locate, excavate, expose, and record the same data for any utility shown in the plans whose proximity to the proposed pipeline could affect the certification requirements of the new installation. Note that in instances of a very wide ditch due to ground conditions, the recording of data for adjacent, paralleling utilities shall only be required for lines which come within three feet of the outside of the pipe being installed, unless otherwise ordered by the Engineer who's decision shall be final.

e. Without exception, for all thrust blocks, the top elevation, outer dimension, thickness of the block, length and location of any sheet piling, if used, shall be recorded by the Contractor's PSM.

f. Specific locations and elevation of equipment, the buildings and miscellaneous items installed inside them shall be recorded as applicable and as required by the Engineer.

g. Without exception, where the substitution of another piece of equipment for that shown on the Plans has been allowed, the footprint, clearance, and elevation dimensions shall be recorded by the Contractor's PSM and these changes shall be accurately and thoroughly portrayed on the as-built plans.

h. Contractor's Licensed Surveyor shall prepare from the field data, as-built record drawings showing correctly, completely, and accurately the installation, embracing all changes and deviations made during construction, including all construction variances, to reflect the work as it was constructed.

i. Record Drawings shall be prepared as specified hereinafter.

j. Record Drawings and five (5) copies shall be signed and sealed by the Surveyor and shall be submitted to the OWNER for the Engineer's review within ten (10) calendar days following the completion date of successful pressure testing of all mains and appurtenances under this Contract.

k. If the Engineer determines that the Drawings are not acceptable, they will be returned to the Contractor with a cover letter noting the deficiencies and/or reasons for the disapproval. Contractor shall have ten (10) calendar days to correct all exceptions taken by the Engineer and resubmit as-built record drawings to the Engineer for final acceptance.

1.05 MECHANICAL, STRUCTURAL AND ELECTRICAL AS-BUILT RECORDS

A. The mechanical, structural and electrical information on as-builts for Pump Stations and Plant work shall be reviewed and signed and sealed by a Florida Registered Professional Engineer when designated as the responsible party for the corresponding portion of the as-builts.

B. The Engineer shall verify that all mechanical, structural and electrical information on the as-built the work was constructed as designed on the Design Plans. Any deviation shall be noted and approved by the OWNER.

C. Capital Improvement Projects contracted by the OWNER shall be certified by

the Construction Manager or Engineer of Record that the work was constructed as designed on the Design Plans with any deviation shall be noted and approved by the OWNER.

1.06 PROPERTY BOUNDARIES

A. The Florida Licensed Professional Surveyor and Mapper shall establish and maintain throughout the construction the property boundaries of pump stations and easements. The surveyor shall verify that the work of the project does not encroach into adjacent (abutting) property. Property corners lost during construction shall be reset at the first opportunity to ensure that the work is done within the designated limits.

B. The as-builts for pump stations or other Water and Sewer above ground facilities in an easement or designated property shall show all property corners, setbacks and dimensions of the structure and appurtenances. All information required of a boundary survey shall be contained on the as-built plans. A boundary survey signed and sealed by a PSM shall be a part of the as- built plans.

1.07 DRAWINGS

A. During the life of the Contract, maintain records of all deviations from the Plans and Specifications and prepare therefrom As-Built Record Drawings <u>showing correctly and accurately all changes and deviations made during construction to reflect the work as it was actually constructed. It is the responsibility of the Contractor to check the As-Built Record Drawings for errors and omissions prior to submittal to the OWNER and certify in writing that the As-Built Record Drawings are correct and accurate</u>, including the actual location of all piping, exposed and internal piping, and electrical/signal conduits in or below the concrete floor. Indicate the size, depth and voltage in each conduit.

B. Legibly Mark To Record Actual Construction: All data as previously specified for all installations by the Contractor's PSM. For on-site structures and facilities work the Contractor's Florida Registered Land Surveyor shall record:

1. Depths of various elements of foundation in relation to finish first floor and datum plane.
2. All exposed and underground piping and ductwork with elevations and dimensions and locations of valves, pull boxes, etc. Changes in location. Horizontal and vertical locations of underground utilities and appurtenances, referenced to <u>permanent</u> reference points, plant survey grids, property lines and similar.
3. Location of internal utilities and appurtenances concealed in the construction shall be referenced to visible and accessible features of the structure. Air conditioning ducts with locations of dampers, access doors, fans and other items needing periodic maintenance.
4. Field changes in dimensions and details.
5. Changes made by Engineer's written instructions or by Change Order.

6. Details not on original Contract Drawings.
7. Equipment and piping relocations.
8. Major architectural and structural changes in structures, including tanks.
9. Architectural schedule changes according to Contractor's record and shop drawings.
10. Record Drawings shall be prepared as specified hereinafter.

C. Specifications and Addenda: Legibly mark each section to record:

1. Manufacturer, trade name, catalog number and Supplier of each product and item of equipment actually installed.
2. Changes made by Engineer's written instructions or by Change Order.

D. Approved Shop Drawings: Provide record copies for system diagrams and drawings together with each element of process equipment, piping, electrical system and instrumentation system.

1.08 SUBMITTALS

A. Accompany submittal with transmittal letter in duplicate, containing:

1. Date
2. Project title and number
3. Contractor's name and address
4. Title and number of each Record Document
5. Signature of Contractor or his authorized representative.

B. Record Drawings with five copies which have been signed and sealed by the surveyor shall be submitted to the OWNER for the engineer's review. Drawings shall conform to recognized drafting standards. As-built drawing shall be submitted on 24-inch by 36-inch bond paper. These materials shall be submitted to the OWNER for the Engineer's review as a prerequisite for payment during the course of construction as previously specified and final, complete sets of documents within ten calendar days following the completion date of successful testing of all mains, equipment and appurtenances under this Contract. Final payment will not be made until the five sets of as-built record drawings (with AutoCAD file) and five sets of prints have been approved and accepted by the Engineer.

1. In cases where a portion of a pipeline system or parts of a process system are put into service, the above conditions shall apply for the in-service portion and monthly payments shall be withheld until the as-built drawings are accepted by the Engineer.
2. As-Built Record Drawings, as prepared by the Contractor's Florida Licensed Professional Surveyor and Mapper and submitted by the Contractor, shall comply with following criteria and standards:
   a. Title block must show the Contract or Project Title (as applicable); Contract number; RFP numbers; Contractor's name; Engineer of Record's name;

Surveyor's name and address; date; location; and where appropriate to the work, size and type (i.e. water main, sanitary gravity main, sanitary force main) of main.

b. Baselines or centerlines must be tied to section corners, monument line and right-of-way lines.

c. Pipeline must be tied to baseline or centerline with stations and offsets.

d. Baselines or centerlines must show bearings or deflection angles, or delta, radius, chord and arc length for curves.

e. Show all horizontal curve data, including point of curvature (PC) and point of tangency (PT) stations or radial bearing.

f. Stationing must be the same as shown on construction drawings and must be tied to Section corners, centerline intersections and all other pertinent control points within the Project. All such pertinent points shall have their stationing shown and where there is dual stationing for a point, both stations shall be called out.

g. Indentify all streets by name or number and show stationing at all intersecting streets.

h. Refer to vertical datum plane and identify the location, elevation and source supplying the bench mark used.

i. Tie easement lines to survey baseline or platted centerline and right-of-ways.

j. Show horizontal and vertical locations of all fittings, deflections, or at any significant change of direction, and at a maximum of 100-foot intervals along the pipeline for off-site (e.g. in the public right-of-way) and at maximum 25- foot intervals for on-site (e.g. on a facility such as a pump station or plant work.

k. On all pipe fittings of 36-inch diameter or over, (i.e. tees bends, crosses, wyes, increasers/decreasers, bevels) elevations must be taken at the end and center points to reflect the true elevation and altitude of the fitting.

l. Elevations of natural ground or pavement over the pipeline must be shown at each position where the pipe elevation is shown and at intervals of high and low points.

m. Manhole rim and valve box rim elevations must be shown.

n. Show all invert and bottom elevations in manholes and valve vaults or boxes. Show all invert and bottom elevations together with pipe size, and where it can be determined, pipe material, for existing structures having pipes which cross the pipe line being constructed.

o. Locations and elevations together with diameter, thickness and material of all casings.

p. Location, top and bottom elevations of all sheeting left in place.

q. Coordinate values used inside plants shall be the local, OWNER established coordinate systems referenced to the property boundary.

r. State plane coordinate values for all new valves and manholes; on existing valves and manholes at points of connection or closest to the point of connection and the point of connection

itself.

3. Certification: The Contractor shall certify on as-built record drawings all other actual constructed details and information as may be required by the OWNER including but not limited to:

   a. Pipeline must be identified by type of pipe material, manufacturer, type of joint and type of joint restraint.
   b. Valves shall be identified by size, type, end condition; and n valves 16-inch or larger, the manufacturer's name and number of turns required to open or close the valve.
   c. Show calculated pipeline percent of grade between manholes of gravity systems.
   d. Types and sizes of sheeting and piling together with measured and complete; location, dimensional, , and elevation data on any pile caps, tie backs, anchors, whalers or other appurtenant structures left in place.

C. Digital Records: The OWNER requires the submittal of as-built drawings in AutoCAD for Windows format and in PDF format. Graphical information contained on magnetic media shall be the same as provided on plan sheets. Digital Records shall be delivered to the OWNER Project Manager containing a list of all files and data being provided. The AutoCAD file shall be compatible with the OWNER system and capable of being uploaded without external reference files.

PART 2 PRODUCTS

NOT USED

PART 3 EXECUTION

NOT USED

END OF SECTION

SECTION 01 78 40 (01725)

PROJECT AS-BUILT/RECORD DRAWINGS

PART 1 GENERAL

1.01 SCOPE

A. This Section shall serve to set requirements for As-Built/Record Drawings submitted to the OWNER. The work specified in this Section will not be paid for directly, but will be considered as incidental work. The contractor shall perform this work at no additional cost to the OWNER.

B. As-Built/Record Drawings shall be submitted prior to placing any mains in service. The approved Final As-Built/Record Drawings are required for Substantial Completion and Conveyance of new water or sewer infrastructure. The infrastructure shall have As-Built/Record Drawings in the format and information specified herein, as recorded by a Professional Surveyor and Mapper (PSM) and prepared in accordance with these guidelines as part of the construction and inspection process.

1.02 RELATED WORK SPECIFIED ELSEWHERE

A. The work shall proceed in accordance with the following specification sections, bound herein:

1. Section 01 31 19.13 (01150) – “Preconstruction Conference”
2. Section 01 42 16 (01005) – “Defined Terms”
3. Section 01 71 23 (01031) – “Grades, Lines and Levels”
4. Section 01 77 00 (01700) – “Contract Closeout”

1.03 GENERAL

A. The Contractor shall retain the services of a Florida Registered Professional Surveyor and Mapper as a prerequisite to receiving a Notice To Proceed (NTP).

1. Prior to receiving the NTP the Contractor shall provide a letter from the PSM indicating that the Contractor has secured his services to perform all survey work for the duration of the Project, and to prepare final As-built/Record Drawings.
2. Prior to receiving the NTP the Contractor shall provide a copy of the insurance policy declaration page of the surveying company, and the professional Liability insurance coverage.
3. The Surveyor shall attend the Preconstruction Conference. It is the Contractor’s responsibility to have the services of the PSM by the Preconstruction Conference and the PSM in attendance.
4. All projects require the Survey Company or PSM to carry professional liability insurance coverage. A copy of the insurance policy including the declaration page shall be provided with the Final As-Built/Record Drawings.

B. The Florida Registered PSM shall maintain records of the installation, including all deviations from Plans and Specifications, and for the purposes of preparing and submitting to the OWNER an As-Built/Record Drawing in compliance with:

1. Florida Statutes Chapter 472.027.
2. Florida Administrative Code Chapter 5J-17.
3. As further required by the Contract Documents.

1.04 AS-BUILT SUBMITTAL PACKAGE

A. The Final As-Built/Record Drawing shall be submitted by the Contractor prior to performing the pressure test of the main to be placed into service. The OWNER is required to have as-built record documentation of all mains in operation.

B. Donation Projects As-Built Package-Submittal Prior To Pressure Testing and Certification

1. A set of signed and sealed As-Built/Record Drawings (DWFX or PDF file), signed and sealed field book information, electronic field raw data shall be submitted using the applicable OWNER's system.
2. As-Built/Record Drawings in digital format DWG.
3. Bill of Materials, Bill of Sale Sketch (completed and signed by the Contractor).
4. Easement(s) legal description and sketch (signed by the owner if part of the project). All surveys for right-of-ways, easements, properties, topographical, boundaries and other special purposes.

C. Monthly submittals

1. A set of signed and sealed As-Built/Record Drawings (DWFX or PDF file), signed and sealed field book information, electronic field raw data shall be submitted using the applicable OWNER's system.
2. As-Built/Record Drawings in digital format DWG.
3. Final As-Built/Record Drawings shall be submitted as a prerequisite for the last progress payment.
4. Easement(s) legal description and sketch (signed by the owner if part of the project). All surveys for right-of-ways, easements, properties, topographical, boundaries and other special purposes.

D. **Final submittal** shall consist of corrected As-Built/Record Drawings and Documents in digital format (DWG and PDF files), to be submitted using the applicable OWNER's system and the following sets of signed and sealed hard copies:

1. Two sets for water main projects,
2. Two sets for gravity and force main sewer projects,
3. For pump stations:
    a. Five sets for donation projects.

b. Three sets for contracts.

4. PSM's signed and sealed copy of the Field Book.

5. For donations, a copy of the insurance policy of the PSM, and the surveying company, including the declaration page.

E. As-Built/Record Drawings signed and sealed by the Florida Registered Professional Surveyor and Mapper and/or Engineer of Record or designated Florida Registered Professional Engineer must comply with format requirements.

F. Platted Lots Requirement

1. In lieu of recorded plats, 1 copy of a tentative plat signed by a representative of the Miami-Dade County, Department of Transportation and Public Works, Plats Division may be acceptable for As-Built/Record purposes. The Plats Division representative shall attest that the lot and block numbers, street names, easements, and other pertinent data shown are as will be recorded in the plat's final form. In this case, the submitter is responsible to provide a copy of the recorded plat to the OWNER's New Business office before any water meters are set on the Project.

1.05 AS-BUILT/RECORD DRAWINGS FORMAT AND GENERAL SUBMITTAL REQUIREMENTS

A. Size shall be 24" X 36".

1. Preferred scales are 1"=20' for contracts and 1"=40' for donations horizontally, and 1"=2' for contracts and 1"=4' for donations vertically. Other scales may be permitted but must be approved by the OWNER prior to preparation of the drawings.

2. Provide separate As-Built/Record Drawings and easements for water and sewer conveyances. Where water and sewer are shown on the sewer As-Built/Record Drawings, print dash the water on the sewer As-Built/Record Drawings and show only sewer As-Built information. The same applies for the water As-Built/Record Drawings.

3. Any deviations from the design plans must be approved by the OWNER.

B. Quality of As-Built/Record Drawings

1. To ensure that As-Built/Record Drawings may serve their intended purposes, they shall be prepared with consideration for quality. The Inspector and As-Built Reviewer will consider the following elements to ensure the quality of As-Built/Record Drawings:

a. Accuracy: The Contractor is required to have a survey crew record the field information as necessary when there is underground pipe installation. The Florida Registered Professional Surveyor and Mapper shall be responsible for providing measurements in accordance with the standard of practice established in Chapter 5J-17 of the Florida Administrative Code, pursuant to Section 427.027, Florida Statutes. The approved final As-Built/Record Drawing will be used as part of the OWNER's GIS and Record System. In addition, the horizontal

accuracy shall not exceed 1 foot in 7,500 feet, a commonly value accepted for suburban areas. The elevations shall be based on a closed level between two-benchmarks and shall not exceed the calculated value of a closure in feet of plus or minus 0.05 feet times the square root of the distance in miles.

b. Appearance: As-Built/Record Drawing shall be prepared in a professional manner consistent with common drafting standards for layout, lettering and line work.

c. Understandability: As-Built information shall be portrayed in a manner that is readily understandable by someone not familiar with the specific job.

d. Clarity: Preparer shall endeavor to present As-Built information clearly without "cluttering" the drawing. Do not include or show trees, shrubs, traffic lights or signs, landscaping, etc.

1.06 CERTIFICATION

A. As-Built/Record Drawings shall include a signed, sealed and dated certification statement by the responsible Florida Registered Professional Surveyor and Mapper, that all measurements were recorded under his direction and that they are accurate.

B. Final As-Built/Record Drawings that contain electrical, mechanical or structural work (pump stations, sewage flow meters, etc.), shall be signed and sealed by the Engineer of Record to indicate As-Built conditions.

C. Certifier shall be fully responsible for the accuracy of the As-Built/Record Drawings. As-Built/Record Drawings shall not contain any statement that the information was obtained from another party other than a Professional Surveyor and Mapper under his direction (e.g. a statement such as "As-Built information provided by Contractor" shall not be permitted).

D. The Contractor shall certify on the As-Built/Record Drawings that the As-Built/Record Drawings are correct and accurately depict what was constructed in the field, in addition that all As-Built field information submitted to the EOR or designated Florida Registered Professional Engineer and/or PSM reflects actual field As-Built project conditions, such as:

1. Valves must be identified by size, type, and end condition. On valves 16-inch or larger, the manufacturer’s name and number of turns required to open or close the valve.

2. Pipeline must be identified by type of pipe material, manufacturer, type of joint and type of joint restraint.

3. Types and sizes of sheeting and piling together with location, dimensional, and elevation data on any pile caps, tie backs, anchors, whalers or other appurtenant structures left in place.

4. External wiring has been terminated inside the panel at the designated “terminal boxes” in accordance with the approved electrical schematic and/or shop drawings.

5. The electrical control panel has been installed and its components match approved shop drawings and are in compliance with the MDWASD's Standards and Specifications.

6. The electrical power and control diagrams are current and reflect all approved plans and/or field modifications made, if any.

7. The electrical control panel and associated electrical equipment are safe to energize and operate.

E. The electrical control panel manufacturer shall certify that:

1. The installed control panel has been inspected at the job site.

2. The control panel and its components match approved shop drawings and are in compliance with project's plans and specifications.

3. The control panel and its components have not been modified, changed or altered in any way, shape or form as to void the Underwriter Laboratory (UL) listing.

4. The electrical control panel and its components are safe to energize and operate

1.07 QUALITY ASSURANCE

A. Contractor's Responsibility

1. As-Built/Record Drawing preparation and submittal shall be the responsibility of the Contractor. The final As-Built/Record Drawings shall be completed and submitted to the OWNER prior to pressure testing, pending to show only portions of the Project not authorized to be done before certification of the system, such as interconnections, abandonments, cut and plugs, etc.; those activities shall be reflected on the final As-Built/Record Drawing and resubmitted within ten (10) County calendar days after a successful test. Testing will not be considered complete until As-Built/Record Drawings, field book data and other record documents are submitted and approved by the OWNER.

2. As-Built/Record Drawings shall be checked by the Contractor for errors and omissions prior to submittal to the OWNER.

3. For Donation Projects: A Bill of Materials (on OWNER form) shall also be certified as correct by signature and presented at the time of As-Built submission. Quantities shown on the Bill of Materials shall match installed and As-Built quantities, not quantities proposed, bid or bought nor scaled distances or quantities.

B. Professional Surveyor and Mapper Responsibility

1. The PSM shall be responsible for all locations, measurements and associated information on the As-Built/Record Drawings.

2. Infrastructure being shown on As-Built/Record Drawings shall have been located under the direction of a Florida Registered Professional Surveyor and Mapper.

3. As-Built/Record Drawings shall meet the requirements established in these specifications.

1.08 PHASING

A. Phasing of projects must be approved by the OWNER and such approval communicated to the Inspections Unit. Where phasing is approved the following additional requirements for As-Built/Record Drawings shall apply:

1. The phase number must appear prominently on each sheet.
2. A prominent phase line shall be drawn at the junctures of the submitted phase with any previous or subsequent phases. The phase line shall be labeled and the phase numbers on either side of it identified.
3. Work in previous or subsequent phases shall be "hatched" out or dashed in plan and profile and labeled "Not a Part" to clearly eliminate it from the As-Built/Record Drawings.
4. Clearly show what is part of the present phase and what is part of previous or subsequent phases at the tie-in points or phase lines. Make certain that this matches what was previously submitted with any earlier phases.
5. Unless otherwise authorized, phases shall end at a valve for water and force mains, and at a manhole for gravity sewers.

PART 2 PRODUCTS

NOT USED

PART 3 EXECUTION

3.01 GENERAL

A. If construction drawings are used to create the As-Built/Record Drawings, all "proposed" construction related information such as “equal to”, “typical”, “approximately”, “shall”, etc. shall be removed from As-Built/Record Drawings, leaving only "As-Built" information reflected on the drawing. Do not remove any information on materials installed. The construction drawings need to be adjusted accordingly to reflect constructed as-built information.

B. Site location sketch shall be provided showing the Project site and surrounding area with all streets clearly named, its own north arrow and a readable scale. The section, township and range shall also be provided therein.

C. Provide separate water and sewer profiles.

D. When the main crosses a utility or structure, the two points providing the clearance shall be identified, measured and recorded. This shall apply to all utilities (water, sewer, sewer laterals, water services, gas, electric, storm, telecommunication, duct banks, etc.).

E. All mains shall be stationed, and all facilities and infrastructure labeled. As-Built/Record Drawings shall show stations for all services. As-Built lengths and distances for service runs shall also be given.

F. Stations shall run along the baseline.

G. For water mains, force mains and gravity sewers use one continuous stationing system.

H. Where different stationing systems cross, show the equation station.

I. Label with station and offset all valves, fittings, services, outlets, manholes, deflection points and other components in the line. The labels, stations and offsets shall coincide, plan and profile.

3.02 REQUIRED INFORMATION AND MEASUREMENTS

A. Set-Up Verification

1. The Contractor's Florida Registered Professional Surveyor and Mapper is required to recover the design baseline and verify the elevations and coordinates on a regular basis as needed.

2. The Florida Registered Professional Surveyor and Mapper shall establish and maintain throughout the construction the property boundaries and easements of pump stations and any other OWNER's facilities and infrastructure. The PSM shall verify that the work of the Project does not encroach into adjacent (abutting) property. Property corners lost during construction shall be reset at the first opportunity to ensure that the work is done within the designated limits. The PSM shall note on As-Built/Record Drawings any OWNER approved encroachments into pump station site (fencing, driveways, etc.).

3. The Contractor is required to have a level instrument setup next to the construction site in order to control the vertical alignment of the pipe installation prior to trench backfilling. The level shall be setup daily for use by the PSM, Contractor's foreman and OWNER/Engineer/Inspector.

4. The Contractor is required to have a survey crew record the field information on a daily basis when there is underground facilities and infrastructure installation. The survey crew shall be on-site as needed to record and verify the information before it is covered. Any underground construction work that does not have the information recorded by a survey crew will be stopped by the OWNER/Engineer/Inspector. The Engineer/Inspector has the authority to order re-excavation of work that was covered without accurate survey measurements.

B. Field Book Information

1. The Florida Registered Professional Surveyor and Mapper is required to have his crews make daily visits to the Project site during underground pipe installation work to perform field measurements of the Contractor's daily installations. This information shall be recorded in field books. Copies of the field notes are required to be provided to the Construction Manager/Inspector

on a monthly basis. The PSM's field notes shall be submitted to the OWNER along with final As-Built/Record Drawings (signed and sealed) as a condition of conveyance (for donation projects), or monthly basis as a condition of payment and at substantial completion (for contract projects) before applying for final payment. Electronic field raw data is acceptable.

C. As-Built/Record Drawings Content Requirements and Procedures

1. The following shall be made a part of any As-Built submittal for water or sewer, where applicable:

   a. Project name, Project identification number and the words "As-Built/Record Water" or "Record Drawing Water" or "As-Built/Record Sewer" or "Record Drawing Sewer", all prominently displayed. PMS's or Engineer's name, company, address, phone number and certification statement shall also be displayed.

   b. All applicable permit numbers for the Project shall be shown on the cover sheet.

   c. Graphic and numeric scale, north arrow and any symbol legend needed.

   d. All involved streets shown with centerlines, right-of-way lines, widths and names, with matching plat, if applicable, subdivision name, phase line and number. (Phasing to be nearest valve and manhole in limits of phase area). Show station at all intersecting streets.

   e. All involved lots and blocks shown and correctly designated (to match plat).

   f. All control lines identified (i.e. centerline, section line, monument line, property line, etc.). Identify all streets by name or number.

   g. Baseline shall be tied to centerlines, boundary lines, section corners, or to monument lines or to right-of-way lines. Baselines must show bearings or deflection angles, or delta, radius, chord and arc length for curves.

   h. Pipeline shall be tied to a baseline that is easily identified on the existing or proposed right-of-way. Baseline shall not be on top of the main except for gravity sewers installed on centerlines.

   i. Show all horizontal curve data, including point of curvature (PC) and point of tangency (PT) stations or radial bearing.

   j. Stationing shall proceed from south to north and/or from west to east. Stationing shall be the same as shown on construction drawings and must be tied to section corners, centerline intersections and all other pertinent control points within the Project. All such pertinent points shall have their stationing shown and where there is dual stationing for a point, both stations shall be called out.

   k. Horizontal Control

      1) The PSM shall show on the As-Built/Record Drawings the Florida State Plane Coordinate (current readjustment - NAD 83,

FLA East Zone 901) with at least two physically located horizontal control points within the Project limits.

2) For As-Built/Record Drawings within OWNER facilities with relative coordinates, a coordinate conversion equation needs to be included on every sheet.

l. Vertical Control

1) As-Built/Record Drawing shall use the same datum as per approved design plans.

2) Nationwide, surveys and As-Built/Record Drawings are in the process of conversion to NAVD 88 from the NGVD 1929. The OWNER will accept NAVD 88 datum with a conversion factor to NGVD 1929 on each page.

3) For projects using City of Miami datum provide a conversion factor on each page to NGVD 1929 datum.

m. Easements

1) Easements, if any, shall be clearly shown with size, coordinates for each corner and tied to the property line. The easements shall be separate for water, sewer, force main and pump stations.

2) Existing easements with Official Record Book (ORB) information must be shown.

3) Easements are required for any infrastructure not in the public right-of-way. An easement may also be required for a main in the public right of way if there is insufficient side clearance to the right-of-way line to permit maintenance of the pipeline (usually 6' for water and 7.5' for force mains and gravity sewer mains on each side measured from the center of the pipe). For pipelines larger than 16-inches in diameter the easement size shall be determined by the OWNER.

4) Easement lines shall be tied to the centerline of the main.

5) Show easement released with Miami Dade County Clerk of the Court Official Record Book (ORB) and page.

n. Tie-in Points

1) All tie-in points, water or sewer shall be tied to the baseline.

2) In instances where this is impractical such as for service installations, the tie-in location may be referenced to a known OWNER facility such as a valve or manhole. This facility must be fully identified with atlas page, OWNER As- Built/Record Drawing number and page and its designation and station as given therein. Approval for this method of location shall be secured with the As-Built Reviewer/Inspector.

3) All locations for future connections or tie-ins shall be left unburied and uncovered until the Contractor's Florida

Registered Professional Surveyor and Mapper measures and records the As-Built information.

4) Clearly show and label what is new and what is existing at the tie-in points with the As-Built/Record Drawing number identified on the existing main.

o. The ends of all services and laterals shall be fully located by reference to the main and the nearest property line(s).

p. Show all outlets, stub-outs, sewer lateral, water service and any other relevant information. Identify the size, material, length, direction and elevation (top of pipe for water and force main, invert for gravity sewer).

q. On all pipe fittings of 36-inches diameter or larger, including tees, bends, crosses, wyes and bevels, station and elevation shall be taken at the end and center points to reflect the true elevation and orientation of the fitting.

r. Elevations of natural ground or pavement over pipelines shall be shown at each position where the pipe elevation is shown at least every 100 feet on profile view.

s. Show profile view of the main pipeline installation on the same sheet as the plan view. Stationing on both views shall be aligned to facilitate As-Built review.

t. Manhole rim and valve box rim elevations shall be shown.

u. Show all invert and bottom elevations in manholes and valve vaults or boxes.

v. Show all invert and bottom elevations together with pipe size, and where it can be determined, pipe material, for existing structures having pipes which cross the pipe line being constructed within 250 feet of point of crossing.

w. Location, elevation, material and size of all casings shall be shown. Launching and receiving pits location and dimensions shall be shown in case of jack and boring or micro tunneling used for casing installation.

x. Types, sizes of sheeting and piling together with measured and complete locations with dimensions, top and bottom elevations of all sheeting and pile caps, tie backs, anchors, whalers or other appurtenant structures including sheeting left in-place, shall be shown.

y. Where service is not at a right angle (90 degrees) to main line, tie service with length of offset to nearest property line.

z. For Horizontal Directional Drilling installations, in addition to the applicable items already mentioned on this section, As-Built/Record Drawings shall include:

1) Equipment used.

2) Angles at entry and exit and radius.

3) Bore path report to include detection method used, location for both entry and exit referenced to a permanent structure,

information of the company collecting the data, such as company name, address, date, staff information who collected the data.

4) The OWNER shall be provided with As-Built/Record Drawing for any failed bore path.

aa. Provide State Plane Coordinate values and elevations for all visible features such as valves, fittings, service lines, manholes, fire hydrants, water sampling points, water meters, cleanouts and backflow preventers, utility poles, adjacent to the main, overhead wires crossing the main and other appurtenances along the main. Also provide State Plane Coordinate values for existing valves and manholes at points of connection or closest to the point of connection and the point of connection itself.

bb. Lines that are abandoned in place, placed out of service or removed shall be clearly identified (dashed and bold line type) on the As-Built/Record Drawings to include cut and plug locations, pipe material and existing As-Built location. Include the existing As-Built/Record Drawing numbers. State whether cut and plug was performed by OWNER forces.

cc. Include a statement showing work performed by the Contractor under OWNER's licensed operator supervision.

dd. Mechanical restraints shall be identified on the As-Built/Record Drawing. The restraint system used shall be identified (gland restrained, joint restrained or gasket restrained). If thrust blocks are constructed, the top elevation, outer dimension, thickness of the block, length and location of any sheet piling, if used, shall be recorded by the Contractor's PSM.

ee. Large diameter concrete transmission mains 42-inches and larger shall show each pipe joint with station and pipe length.

ff. Restrained pipe, end line valves, thrust blocks shall be left uncovered for the last complete length. In line valves and tees shall be left exposed for one length on both sides plus the face end. Measure and record the elevation, horizontal and vertical alignment, and inclination for these items.

gg. For pipeline projects, provide dimensions and elevations of ground and top of pipe every one-hundred feet maximum, or portion thereof along the pipeline, at every significant change on ground elevation, at every horizontal and vertical change in direction and at all fittings, with stations.

hh. If an asset is authorized to be reused, clearly show that asset, such as a fire hydrant, is being reused.

ii. Pipeline must be identified by type of pipe material, manufacturer, type of joint and type of joint restraint.

jj. The identity, dimension, location and elevation of any existing utilities crossing the proposed line and so immediately adjacent to the new line

as to be exposed by the excavation shall also be recorded. Locate, excavate, expose and record the same data for any utility shown in the plans whose proximity to the proposed pipeline could affect the certification requirements of the new installation. Note that in instances of a very wide ditch due to ground conditions the recording of data for adjacent, paralleling, utilities shall only be required for lines which come within three feet of the outside (but not less than the minimum required per FAC 62-555.314) of the pipe being installed unless otherwise ordered by the OWNER whose decision shall be final.

kk. Specific location and elevation of equipment, buildings and miscellaneous items installed inside the buildings shall be recorded as applicable and as required by the OWNER.

ll. Without exception, where the substitution of a piece of equipment for that shown on the Plans has been allowed, the footprint, clearance and elevation dimensions shall be recorded by the Contractor's PSM and these changes shall be accurately and thoroughly portrayed on the As-Built/Record Drawings.

2. As-Built/Record Drawings for **water and sewer force mains** shall additionally include the following:

a. Plan view showing size, material, offset of main, deflections (if any), stations and offsets of services, hydrants and fittings at the main; and at main, deflections (if any) and the end of the service line.

b. Profile showing ground and top of pipe elevation every 100 feet, maximum, and at any change in grade (with corresponding station) and at every fitting. Show size and material of pipe, all fittings and extend of restrained pipe with stations. Stationing system shall be the same as that used in the plan view.

c. Distances from main to all valves, fire hydrants and meter boxes shall be shown. Tie hydrants to right-of-way. In established areas, the PSM shall run-out right-of-way lines.

d. All "Assembly Detail" shall be provided for all turbo meter installations and for all meters greater than four (4) inches.

e. Label water service as either double, single, irrigation, and so on, based on type of service, including diameter and material.

f. When meter banks are used, show typical detail with size of service line, material and type of services.

g. Location of all air release valves and top of pipe elevation, identifying if the air release valves are automatic or manual.

h. Valves must be identified by size, type, and end condition. Manufacturer's name and number of turns required to open or close the valve shall be provided for valves 16 inch or larger.

3. Gravity sewer As-Built/Record Drawings shall additionally include the following:

a. Plan showing manhole numbers and stations, size and material of pipe,

manhole to manhole length and slope in percentage. The size, material, station and lengths of laterals shall also be shown. Stationing shall be in accordance with the approved permit Plans.

b. Profile showing manhole numbers (as per plan), rim elevations, invert elevations in and out of each manhole with directions, length and slope of line. Pipes with a slope less than the minimum recommended by RER (formerly Department of Environmental Resource Management) minimum for a particular size of pipe shall not be accepted.

c. Stations and offsets of all wyes and tees for laterals and location of cleanouts with distance to property line.

d. Connections to existing sewer collection systems with flow direction shown.

e. Show profile for sewer laterals crossing utilities, with invert elevations at main, at crossings, at change in direction and at clean out, including slope, clearance at crossing and station.

f. When connecting a new main or lateral to an existing main, the As-Built/Record Drawing shall show distance and invert elevations of downstream and upstream existing manholes.

4. The following shall also be included on As-Built/Record Drawings for sewer pump stations and other infrastructure:

a. A complete topographic and boundary survey for the pump station and/or other facilities signed and sealed by the Florida Registered Professional Surveyor and Mapper as part of the As-Built/Record Drawings. All information required of a boundary survey, such as property corners, setbacks, dimensions of the structure and appurtenances, etc. shall be contained on the As-Built/Record Drawings to include the legal description of pump station site and/or other facilities, easements and rights-of-way abutting the pump station site and location of all surface facilities recorded by a PSM. All utilities within pump station property shall be properly shown, along with their associated elevation and clearance.

b. Horizontal and vertical locations of all fittings, deflections, or at any significant change of direction, and at a maximum 25- foot intervals for on-site (e.g. on a facility such as a pump station or plant work).

c. Plan and vertical cross-section of the station showing and identifying the piping and mechanical layout. Show elevations for top of wet and dry wells, bottom of wet well, pipe inverts, finish floor elevation, etc.

d. FEMA flood zone and elevation shall be shown on the cover sheet.

e. Electrical As-Built/Record Drawing control and riser/one-line power schematic diagrams, RTU wiring diagram and all other elevation and any other electrical details.

f. Engineering Report as to the pump manufacturer, size, capacity (TDH), peak design capacity (in GPM) and Bill of Materials (for donation projects).

g. The mechanical, structural and electrical record drawings are to be prepared by the Engineer of Record or a designated Florida Registered Professional Engineer, each sheet of the record drawings must be signed and sealed by the Engineer of Record or a designated Florida Registered Professional Engineer. The cover sheet is to be signed and sealed by the Engineer of Record or a designated Florida Registered Professional Engineer and shall include the following statement:

1) "I certify that these record drawings have been reviewed by me or by individual(s) under my direct supervision and that these drawings incorporate the information contained in the certified As-Built/Record Drawings. To the best of my knowledge and belief these record drawings substantially reflect the sanitary sewer pump station and/or other infrastructure as constructed, and as depicted on the permit plans including any OWNER approved deviations, if any. The accuracy of these record drawings is reliant on the accuracy applied by the PSM that prepared the certified As-Built/Record Drawings, which was [include the PSM's name, business name, PSM number, address and telephone number]. The PSM has certified to me in writing, that the As-Built location information of the sanitary sewer pump station and/or other infrastructure conforms to the standards of practice for land surveying, Chapter 5J-17 of the Florida Administrative Code."

3.03 OWNER PROCESSING

A. The OWNER will require 10 County calendar days to perform the As-Built review.

B. As-Built/Record Drawings will be initially reviewed, commented and/or recommended to be approved, from construction perspective, by the responsible Field Inspector, who shall verify that they are an accurate representation of the work as installed and that the job as shown is complete and in accordance with the permitted plans.

C. Following the Field Inspector's review, As-Built/Record Drawings will be reviewed in depth by the As-Built Reviewer to ensure compliance with these specifications. The Reviewer will also check the complete package which for donation projects shall include the Bill of Materials.

D. The complete submittal package as defined above shall be delivered using the applicable OWNER's system.

E. Cause for Non-Review

1. If review by the As-Built Reviewers reveals excessive errors or omissions, the As-Built/Record Drawings shall be deemed "non reviewable". As-Built/Record Drawings containing excessive errors or omissions shall include those with omission of major sections of the installation, water and sewer As-Built/Record Drawings on same sheet, those lacking large amounts of information and other

rrors or omissions that are considered excessive in the opinion of the As-Built Reviewer.

2. In cases when an As-Built/Record Drawing is considered "non-reviewable", it shall be marked "Not Reviewable", the reviewer shall note comments regarding obvious problem(s) and shall be returned to submitter. Such As-Built/Record Drawings will not be considered as having been reviewed for the purposes of Sub-section F, Punch List, below.

F. Punch List (for donation projects only)

1. Punch List items may be generated from the OWNER initial review. Successive reviews are solely for the purpose of ensuring that original punch list items are completely and correctly done to obtain a final As-Built/Record Drawing acceptable to the OWNER.

2. Successive punch list items may only be added to correct a problem resulting from submitter's efforts to comply with the original punch list. The OWNER will prevent adding new punch list item(s). Submitter shall be required to make these successive changes.

3. In the case of a major oversight on the part of the As-Built Reviewer, punch list items may be added to the list or requested to the submitter after the valid time for such items. The OWNER requires that all corrections be made as a condition of accepting the final As-Built/Record Drawings.

G. Acquisition and Resubmittal

1. After notification from the OWNER, DWFX and/or PDF file with markups along with the As-Built punch list (donation projects only) can be obtained from the applicable OWNER’s System.

2. After making the corrections requested on the As-Built/Record Drawing set and punch list, upload the revised package to the applicable OWNER’s System. On contracts, contractor shall resubmit corrected As-Built/Record Drawings to the OWNER within 10 County calendar days for contracts

3. The OWNER will require 10 County calendar days to perform the As-Built/Record Drawing review.

H. Disputes or Interpretation

1. Resolution of disputes and interpretation of these requirements is the responsibility of the As-Built Reviewer. Submitting parties are urged to work with him to resolve any problems of this nature.

2. Where necessary, the submitting party may request a hearing with the OWNER’s PSM in matters of dispute or interpretation. The OWNER’s PSM's decisions shall be final.

END OF SECTION

THIS PAGE LEFT INTENTIONALLY BLANK

SECTION 01730

OPERATING AND MAINTENANCE DATA

PART 1 - GENERAL

1.01 SCOPE OF WORK:

A. Prepare Operating and Maintenance (O & M) Manual covering all equipments and systems provided under this project.

B. Instruct OWNER's personnel in the operation of equipment and maintenance provided under this project.

C. This Section covers the services of the manufacturer's representatives and special coordinating services required of the Contractor that shall apply during construction, facilities startup, and training of the OWNER's personnel for facilities operation.

D. The Contractor shall inform all subcontractors and manufacturers of the requirements herein and include the following services in his costs for the work. Where a minimum amount of time is stated in the Technical Specifications for manufacturer's services, any additional time required to perform the specified services shall be at no additional cost to the OWNER.

1.02 FORM, FORMAT AND SUBMITTALS CONTENTS:

A. Operating and Maintenance manuals will be used for use by City of Opa-Locka Public Works personnel in the operation and maintenance of the various systems.

B. The OWNER shall be furnished with one set of any special tools required for servicing for each type of equipment actually furnished.

C. Prepare data in the form of an instructional manual for use by OWNER's personnel.

D. Format:

1) Size: 8½ in. x 11 in.
2) Paper: 20-pound minimum, white, for typed pages.
3) Text: Manufacturer's printed data or neatly typewritten.
4) Drawings:
   (a) Provide reinforced punched binder tab, bind in with text.
   (b) Fold larger drawings to the size of the text paper.
5) Provide fly-leaf for each separate product, or each piece of operating equipment.
   (a) Provide typed description of product, and major component parts of equipment.
   (b) Provide indexed tabs.
6) Cover: Identify each volume with typed or printed title "OPERATING AND MAINTENANCE INSTRUCTIONS". List:
   (a) Title of Project.
   (b) Identify of separate structure as applicable.
   (c) Identity of general subject matter covered in the manual.

E. Binders:

1) Commercial quality three-ring binders with durable and cleanable plastic covers.
2) Maximum ring size: As required (Minimum 1½-inches).

F. Content of Manual:

1) Neatly typewritten table of contents, arranged in a systematic order.
   (a) Contractor, name of responsible principal, address and telephone number.
   (b) A list of each product required to be included, indexed to the content of the volume.
   (c) List, with each product, the name, address and telephone number of:
      (i) Subcontractor or installer.
      (ii) Maintenance contractor, as appropriate.
      (iii) Identify the area of responsibility of each.
      (iv) Local source of supply for parts and replacement.
   (d) Identify each product by product name and other identifying symbols as set forth in Contract Documents.

G. Product Data:

1) Include only those sheets which are pertinent to the specific product.
2) Annotate each sheet to:
   (a) Clearly identify the specific product or part Installed.
   (b) Clearly identify the data applicable in the installation.
   (c) Delete references to inapplicable information.

H. Drawings:

1) Supplement product data with drawings as necessary to clearly illustrate:
   (a) Relations of component part of equipment and system.
   (b) Control wiring, schematic wiring, and flow diagram.
2) Coordinate drawings with information in Project Record Documents to assure correct illustration of completed installation.
3) Do not use Project Record Documents as maintenance drawings.

I. Written text, as required to supplement product data for the particular installation:

1) Organize in a consistent format under separate headings for different procedures.
2) Provide a logical sequence of instructions for each procedure.

J. Copy of each warranty, bond and service contract issued.

1) Provide information sheet for OWNER's personnel, give:

   (a) Proper procedures in the event of failure.
   (b) Instances which might affect the validity of warranties or bonds.

1.03 MANUAL FOR EQUIPMENT AND SYSTEMS:

A. Content, for each unit of equipment and system, as appropriate:

1) Description of unit and component parts.

(a) Function, normal operating characteristics, and limiting conditions.
(b) Performance curves, engineering data and tests.
(c) Complete nomenclature and commercial number of all replaceable parts.

2) Operating Procedures:

(a) Start-up, break-in, routine and normal operating instructions.
(b) Regulation, control, stopping, shut-down, and emergency instructions.
(c) Special operating instructions.

3) Maintenance Procedures:

(a) Routine operations.
(b) Guide to "trouble shooting".
(c) Disassembly, repair, and reassembly.
(d) Alignment, adjusting, and checking.

4) Servicing and lubrication schedule.

(a) List of lubricants required.

5) Manufacturer's printed operating and maintenance instructions.

6) Description of sequence of operation by control manufacturer.

7) Original manufacturer's parts list, illustration, as drawings and diagrams required for maintenance.

(a) Predicted life of parts subject to wear.
(b) Items recommended to be stocked as spare parts.

8) List of original manufacturer's spare parts, manufacturer's current prices, and recommended quantities to be maintained in storage.

9) Other data as required under pertinent sections of specifications.

B. Prepare and include additional data when the need for such data becomes apparent during instruction of OWNER's personnel.

C. Additional requirements for operating and maintenance data: The respective sections of Specifications.

1.04 POSTED OPERATING INSTRUCTIONS:

A. General: Operating instructions and diagrams shall be prepared for posting near the equipment. Posted operating instructions shall be photographic or equal non-fading reproductions framed under glass encased in non-discoloring plastic and shall be mounted in location directed. Copies of the posted operating instructions shall also used with the operating and maintenance manuals as a basis in training employees in the operation and maintenance of systems and related equipment installed.

B. Contents: Posted operating instructions shall consist of simplified, consolidated equipment, control and power diagrams graphically representing the entire system and actual equipment installed, including concise written instructions on how to start and stop systems, what settings and conditions are to be observed and what control adjustments are to be made or maintained by the operation.

1.05 MANUFACTURER'S NAMEPLATES:

A. Each major component of equipment to have manufacturer's name, address, model number and rating on a plate securely affixed in a conspicuous place. Nameplate of a distributing agent will not be acceptable in lieu of manufacturer's nameplate.

B. Nameplate shall be die-stamped, engraved, or etched to guarantee long term legibility.

1.06 GUARANTY/WARRANTY:

A. The Contractor shall guarantee that all new equipment has the capacity specified and that it will operate without excess noise or vibration.

B. Contractor shall furnish a written guarantee covering all workmanship and materials for a period of one (1) year, from the date of acceptance. This shall include an agreement to repair or replace, at his expense, all defects that may appear in that time, which in the opinion of the OWNER, are due to defective workmanship or materials.

C. Copies of factory warranties on all equipment furnished shall be submitted with the above described, written guarantee period, and included in maintenance manuals.

1.07 OPERATION AND MAINTENANCE RESPONSIBILITY:

A. Contractor shall provide all required service and maintenance on all equipment installed under this contract for one (1) year following final acceptance or the beginning of beneficial use by the OWNER. The starting date of one (1) year service period shall be determined by the OWNER. Included in the service and maintenance to be provided during this one (1) year period, shall be all required lubrication, adjusting belt tensions, eliminating excessive noise and vibration, correcting all electrical and mechanical faults, recording all permanent installed gauge meter and temperature readings, and other general service items, including the answering of service calls.

B. Services During Construction:

1) General: Competent and experienced technical representatives shall represent the manufacturers of all equipment and systems as many days as may be necessary to resolve assembly or installation problems at the worksite which are attributable to, or associated with, the equipment furnished. This requirement applies to manufacturers of all equipment furnished, whether or not specifically set forth in the Technical Specifications.

2) Manufacturer's Certificate of Proper Installation: Where called for in the Technical Specifications, the manufacturer's representative shall provide a certificate stating that the equipment or system has been installed in accordance with the manufacturer's recommendation and has been inspected by a manufacturer's authorized representative, that it has been serviced with the proper initial lubricants, that applicable safety equipment has been properly installed, and that the proper electrical and mechanical connections have been made.

C. Functional Testing Assistance:

1) Where functional (or run) testing is called for on the Technical Specifications, the manufacturer's representative shall assist with the initial test, which shall include checking for proper rotation, alignment, speed, excessive vibration, and noisy operation. Initial equipment and system adjustment and calibrations shall be performed in the presence of and with the assistance of the manufacturer's representative. The previously specified Manufacturer's Certificate of Proper Installation shall include the statement that proper adjustment have been made and that the equipment or system is ready for plant startup and operation.

2) The Contractor, as applicable to the equipment furnished, shall state in writing that all necessary hydraulic structures, piping systems, and valves have been successfully tested; that all necessary equipment systems and subsystems have been checked for proper installation, started, and successfully tested to indicate that they are all operational; that the systems and subsystems are capable of performing their intended functions; and that the facilities are ready for startup and intended operation.

D. Training of Owner's Personnel

Where called for in the Specifications, the manufacturer's representative shall provide detailed instructions to the OWNER’s personnel for operation and maintenance of the specified equipment. These training services shall include pre-startup classroom and onsite equipment instruction and/or post-startup classroom and onsite equipment instruction, as stated in the Specifications.

PART 2 - PRODUCTS

(Not used)

PART 3 - EXECUTION

(Not used)

END OF SECTION

SECTION 01740

PERMITS

PART 1 GENERAL

1.01 SCOPE OF WORK

A. Where OWNER has obtained various permits for this Project, copies will be appended at the rear of the Specifications. The required permits are listed in 1.07 B of SECTION 01015 General Requirements. The Contractor shall obtain all necessary permits except the permits obtained by the OWNER.

B. The Contractor shall be familiar with, and comply with, all requirements of these permits. All other necessary permits shall be obtained by the Contractor and be paid for as specified below in 1.01, G.

C. Unless otherwise specifically stated elsewhere in the Contract Documents, Supply Plans and Calculations for work not designed by OWNER that are preponderantly of a structural nature shall be signed and sealed by a Professional Engineer registered in the State of Florida as stated in the Florida Building Code; Section 104.2.1, 104.2.2; and Section 202 which each read as follows:

1. All information, Plans, Specifications and accompanying data shall bear the name and signature of the person responsible for the design.
2. Design professional: If the design professional is an architect or engineer legally registered under the laws of this state regulating the practice of architecture or engineering, then he/she shall affix their official seal to said Plans, Specifications and accompanying data, as required by Florida Statute.
3. Engineer: A Florida-registered engineer (Section 202).

D. The Contractor's particular attention is called to any Special Conditions of the permits relating to construction procedures, excavation and backfill requirements, open trench restrictions, turbidity control and all other general and special conditions, including flowable fill and pavement details. In the event any of the conditions of the permits are in conflict with the requirements of these Specifications, the more stringent conditions shall take precedence. The Contractor is to conform to all regulations of the governmental agencies having jurisdiction over this work, whether or not included in the permit.

E. Any deviations from the Plans, Specifications or permits appended thereto, must first be approved by the Engineer even if approval for the change has been given by the permitting agency.

F. The Contractor shall assume throughout the life of the Contract all obligations and responsibilities imposed on OWNER or other City departments as permittee of the above-mentioned permits. All expenses necessary for compliance with the

regulations and requirements of each permitting agency and its permit shall be borne by the Contractor, and shall be included in the overall bid price.

G. The cost of any fees such as impact fees, inspection fees, etc. and the cost of all required permits shall be borne by OWNER. The Contractor shall pay the required fees, obtain the permit(s) and then upon submission of proof of cost to OWNER, be reimbursed for said cost out of the Approved Permit Fee Reimbursement Item. This shall apply only to required permits and fees. Permits obtained or fees paid for the advantage of the Contractor or non-required permits obtained for whatever reason shall not be reimbursed. The necessity or non- necessity of a permit or fee shall be determined by the Engineer whose word shall be final. As specified in the paragraph above, all costs of compliance with the permit(s) shall be borne by the Contractor and included in the bid price.

H. All surveying required by the Project permits shall be done by the Contractor's Florida Registered Surveyors and Mapper. This includes staking out limits of construction, maintaining baselines and preparing monthly as-builts.

PART 2 PRODUCTS

NOT USED

PART 3 EXECUTION

NOT USED

END OF SECTION

SECTION 01750

MAINTENANCE OF TRAFFIC AND PUBLIC STREETS

PART 1 GENERAL

1.01 SCOPE OF WORK

A. The Contractor shall be responsible for providing the Engineer with Maintenance of Traffic (M.O.T.) plans for lane closures and/or detours for approval. These M.O.T. plans shall be produced by an individual employed by the Contractor and certified as "Work Zone Traffic Safety Supervisor" by the American Traffic Safety Service Association, ATSSA.

B. The Contractor shall be responsible for the maintenance of public streets and traffic control for the duration of the project. The cost of Traffic Control including the cost of any required off duty police officers shall be included under the appropriate bid item in the Proposal. If no bid item for this is included, said costs shall be included in other appropriate items of the bid and no extra compensation will be allowed.

1.02 REGULATIONS

A. As used herein, any reference to Miami-Dade County, its departments, or its published regulations, permits and data, shall be synonymous and interchangeable with other recognized governing bodies over particular areas or streets, or their departments, published regulations, permits or data. The Contractor shall abide by all applicable laws, regulations, and codes thereof pertaining to maintenance of public streets, detour of traffic, traffic control and other provisions as may be required for this Project.

1.03 MAINTENANCE OF TRAFFIC (M.O.T.)

A. The Contractor shall be fully responsible for the maintenance of public streets, detour of traffic (including furnishing and maintaining regulatory and informative signs along the detour route), traffic control, and other provisions throughout the Project as required by the MDCDTPW, Traffic Engineering Division (Traffic Division), FDOT or other governing agency. Traffic shall be maintained according to corresponding typical traffic control details as outlined in the MDCDTPW Manual. No street shall be completely blocked, nor blocked more than one-half at any time, keeping the other one-half open for traffic, without specific approval.

B. If required by the Traffic Division, the Contractor shall make arrangements for the employment of uniformed off-duty policemen to maintain and regulate the flow of traffic through the construction area. The number of men required and the number of hours on duty necessary for the maintenance and regulation of the traffic flow shall be subject to their approval. The cost of such off-duty policemen shall be paid from the Quotation Item established for this purpose. If required by traffic control permits or agencies, the Contractor shall work, odd or night hours, as required for traffic control reasons, and the cost of such work shall be considered as incidental to construction and no extra compensation will be

allowed.

C. The Contractor shall provide all barricades with warning lights, necessary arrow boards and signs, to warn motorists of the work throughout the Project. Adequate approved devices shall be erected and maintained by the Contractor to detour traffic.

D. Excavated or other material stored adjacent to or partially upon a roadway pavement shall be adequately marked for traffic safety at all times. The Contractor shall provide necessary access to all adjacent property during construction.

E. The Contractor shall be responsible for the provision, installation and maintenance of all traffic control and safety devices, in accordance with specifications outlined in the MDCDTPW Manual. In addition, the Contractor shall be responsible for the resetting of all traffic control and information signing removed during the construction period.

F. Where excavations are to be made in the vicinity of signalized intersections, the Contractor is alerted that vehicle loop detectors may have been embedded in the pavement. Every effort has been made to show the approximate locations on the Plans; however, the Contractor shall verify these locations by inspecting the site of the work and by contacting the Traffic Division. Any loop detector which is damaged by the Contractor, whether shown on the Plans or not, shall be repaired or replaced by the Contractor, at his expense, and to the satisfaction of the Traffic Division.

G. Where applicable, the Contractor shall notify the Traffic Division 24 hours in advance of the construction date or 48 hours in advance of construction within any signalized intersection.

H. Temporary pavement will be required over all cuts in pavement areas, and also where traffic is to be routed over swale or median areas. When the temporary pavement for routing traffic is no longer necessary, it shall be removed and the swale or median areas restored to their previous condition.

I. Pavement markings damaged during construction shall be remarked, as required by the Traffic Division.

PART 2 PRODUCTS

NOT USED

PART 3 EXECUTION

NOT USED

END OF SECTION

SECTION 02230

CLEARING AND GRUBBING

PART 1 - GENERAL

1.01 WORK INCLUDED

A. Clear and grub the areas to be occupied by the facilities or utility systems to be constructed, including all areas to be excavated, filled, paved or planted as shown on the approved plans and as specified herein.

1.02 DEFINITIONS

A. Clearing shall consist of the cutting, removal and satisfactory disposal of all trees, stumps, brush, shrubs, rubbish and any other objectional material within the designated areas.

B. Grubbing shall consist of the removal and disposal of all stumps larger than 1-1/2 inches in diameter and other objectional material to a depth of at least 12 inches below the ground surface.

1.03 QUALITY ASSURANCE

In the course of the work, it may become to remove trees if they interfere with the work. Dade County and various municipalities have ordinances regulating the removal, relocation and pruning of trees in the public right-of-way, these ordinances shall be strictly adhered to. The Contractor shall obtain a permit from Dade County and/or other regulatory agencies having jurisdiction over the work area before removing, relocating and/or pruning any tree. The Contractor shall comply with all requirements and conditions of the permit.

PART 2 - PRODUCTS

(Not Used)

PART 3 - EXECUTION

3.01 CLEARING AND GRUBBING

A. The Contractor shall remove and replace, where required all existing shrubbery, trees, grass, sprinklers, fences, signs, mailboxes, structures, roadways, sidewalks, curbs and similar items or structures in the way of all excavation necessary for the construction of the project.

B. Where pavements or sidewalks are cut, they shall be cut by means of a mechanical pavement saw to form true and straight edges. Where such cutting is for the purpose of pipeline installation, saw cutting shall be either parallel or at right angles with the centerline of the pipe,

C. To protect himself from being held liable for any existing damaged pavement, including detour routes, the Contractor is advised to notify in writing the authority having jurisdiction, prior to proceeding with any work in the vicinity.

3.02 PROTECTION OF ADJACENT AREAS

The Contractor shall protect areas shown on the Drawings or designated by the Engineer of Record to remain protected from damage by construction operations by erecting suitable barriers of other acceptable means.

3.03 DISPOSAL

All roots, vegetation and other refuse removed from the site during clearing and/or grubbing operations shall be legally disposed of by the Contractor. Where required, the Contractor shall obtain a permit from Miami-Dade County and/or other regulatory agencies having jurisdiction over the work area before burning any material on the site.

- END OF SECTION -

SECTION 02314

EXCAVATION, BACKFILL AND FILL FOR STRUCTURAL FACILITY AND UTILITY SYSTEMS

PART 1 - GENERAL

1.01 SCOPE OF WORK:

A. The work included under this Section consists of furnishing material and equipment, and performing all labor necessary for excavating, backfilling, filling and compaction of areas to be occupied by facilities or utility systems to be constructed.

B. Plan For Excavation: Prior to commencing the excavation, the Contractor shall submit a plan of his proposed operations to the Engineer of Record for approval. The Contractor shall consider, and his plan for excavation shall reflect, existing utilities that are to remain, the equipment and methods to be employed in the excavation.

1.02 QUALITY ASSURANCE

All excavations shall conform with South Florida Building Codes, the State of Florida Trench Safety Act, OSHA requirements and the provisions herein. Excavations shall be executed in accordance with all applicable requirements of Section 01016, including notification of Sunshine State One-Call Center (1-800-432-4770) 48 hours prior to any excavation.

PART 2 - PRODUCTS

2.01 MATERIALS:

A. Structural Fill: Structural fill shall consist of an inorganic, non-plastic, granular soil containing less than 10 percent material passing the No.200 mesh sieve (relatively clean sand or crushed limerock with a 2-inch max. particle size) with a Unified Soil Classification of GP, GW, SP, SP-GM, SW-SM or SP-SM.

B. Ballast Rock: Ballast rock shall be composed of hard, durable, sound pieces having a specific gravity of not less than 2.65. It shall be crushed rock conforming to the following gradation:

U.S. Standard sieve size	Percent by weight passing
1-1/2 inch	100
3/4 inch	30-75
½ inch	15-55
1/4 inch	0-5

C. Suitable Backfill Material: Backfill material shall be clean and free from all organic material, clay, marl or unstable materials, debris, lumps, or broken paving. No rocks or stones larger than 6 inches in diameter shall be allowed in any backfill. Material for backfill may be material resulting from excavation, if suitable in the opinion of the OWNER.

D. Select Backfill Material: Select backfill material specified herein shall meet all the general requirements for backfill material set forth above, and in addition, shall be free of any rocks or stones larger than 2 inches in diameter. Select backfill material may be material resulting from trench excavation, if suitable in the opinion of the OWNER, carefully selected to comply with these requirements.

PART 3 - EXECUTION

3.01 PREPARATION:

A. Clearing: The construction site shall be cleared of all obstructions and vegetation, including large roots and undergrowth, within 5 feet of the lines of excavation, in accordance with Section 02230. All debris created by this clearing operation shall be hauled from the site and disposed of by the Contractor.

B. Removals: Complete all removals within the lines of excavation prior to beginning excavation. Where required, all existing shrubbery, trees, grass, sprinklers, fences signs, mailboxes, structures, sidewalks, curbs, utility poles, or structures subject to damage resulting from the excavation should be transplanted, relocated, braced, shored, or otherwise protected and preserved.

3.02 EXCAVATION

A. The Contractor shall perform all excavation of every description and of whatever substances encountered, to the dimensions and depths shown on the approved plans, but in all cases as required for construction, and as specified herein. All excavations shall be made by open cut.

B. When the walls of the excavations are to be kept vertical and in order to protect the safety of workmen, the general public, this or other work or structures, or excavation walls, or pipe installation including materials encountered in the excavation which have a tendency to slough or flow into the excavation, undermine the banks, weaken the overlying strata, or are otherwise rendered unstable by the excavation operation shall be retained by steel sheeting, stabilization, grouting or approved methods. Said methods shall comply with the Trench Safety Act (TSA). Sheeting and shoring or other approved method shall be designed by a Professional Engineer licensed to practice in the State of Florida.

C. For structures, the Contractor shall maintain the bottom of the excavation firm and dry, and maintain an elevation of the water one (1) foot below the concrete to be placed, by use of pumps, tremie or other acceptable method.

D. In areas where trench widths are not limited by right-of-way or easement widths, property line restrictions, existing adjacent improvements including pavements, structures, and other utilities, and maintenance of traffic, the trench sides may be sloped to a suitable angle of repose of the excavated material.

E. Ladders or steps shall be provided for and used by workmen to enter and leave trenches.

F. Excavated material shall be stored and disposed of in such a manner that they will not interfere unduly with traffic on public streets and sidewalks. In congested areas, such materials, cannot be stored adjacent to the trench nor used immediately as backfill, shall be removed to convenient places of storage. If any material is creating a public hazard or other unsafe condition, it shall be removed immediately to a storage area.

G. Materials suitable for use as backfill be hauled to and used in areas where not enough suitable material is available from the excavation. Material unsuitable for use in backfill shall be removed promptly and disposed of by the Contractor. Any pockets of organic matter, concrete or other unsuitable material encountered in excavating shall be removed and replaced with material satisfactory to the OWNER.

H. The excavation of walls for forms will not be permitted.

I. Excavation for structures:

1. Clear, as stated above, all existing items or structures in the way of the proposed pipeline or structures, and excavate as necessary to the depths and dimensions shown on the Plans, but in all cases as necessary for satisfactory installation.

2. Where pavements or sidewalks are cut, they shall be cut by means of a mechanical pavement saw to form true and straight edges which shall, in general, be either parallel or at right angles.

3. In order to protect himself from being held liable for any existing damaged pavement, including detour routes, the Contractor is advised to notify in writing the authority having jurisdiction over the street where such defective pavement exists prior to proceeding with any work in the vicinity. A copy of all such notices shall be forwarded to the OWNER.

4. Where interlocking steel sheeting is used, the OWNER may require that the sheeting be cut off at a level two (2) feet above the top of the installed pipe and that portion below the level be left in place.

5. Excavation for manholes and other piping appurtenances shall be sufficient to leave at least two (2) feet clear between their outer surfaces and the embankment or sheeting.

6. If, in the opinion of the Engineer of Record or the OWNER, the soil at that depth is unsatisfactory as foundation material because it contains marl, muck, organic matter, or other unsuitable material, the excavation shall be continued two (2) feet deeper, except if a suitable foundation material is exposed at a lesser depth, further excavation will not be required.

7. When the pipe to be installed in a trench requires the pipe installers to work under and around the pipe, the Contractor may request the OWNER that he be allowed to exceed the 12" maximum clearance, specifying the clear distance desired.

8. The ends of existing mains shall be temporarily capped or plugged to keep them clean and the ends of all mains shall be temporarily anchored to keep the joints from blowing apart from internal pressure until the new mains can be reconnected to them.

9. In addition to specific construction methods specified, the general requirements in subsequent subsections, below, shall apply to the work of this project.

3.03 DEWATERING

A. Any water which accumulates in the excavations for structures shall be removed promptly by means satisfactory to the Engineer of Record in such a manner as to not create a nuisance to adjacent property or public thoroughfare. Pumps and engines for dewatering systems shall be operated with mufflers and at a minimum noise level suitable to a residential area. The Contractor shall be responsible for any nuisance created due to the disposal of the water from his drainage system.

B. Where applicable, the Contractor shall be required to obtain all necessary permits approving the location and proposed method of disposal before discharging water from any excavation into any portion of the public right-of-way or into any existing drainage structure or facility.

3.04 STOCKPILED MATERIALS

Suitable materials removed from the excavation shall be stored and disposed of in a manner which will not interfere with traffic at the site. Material suitable for backfill and not needed for backfill at the structure, but needed elsewhere shall be stockpiled until moved and used elsewhere.

3.05 BACKFILL

A. The excavation shall then be brought to the structures bottom elevation by placing and compacting 6-inch layers of Oolitic limerock (or material previously defined) to 95 percent of maximum density as determined by AASTHO T-180. Structural fill shall be supplied by the Contractor except as may otherwise be carefully selected from excavated material if deemed suitable in the opinion of the Engineer. Backfill around new structures up to the pavement base or surface of the ground shall be material not exceeding 6-inches in diameter, and shall be compacted in layers not exceeding 9 inches. Each layer shall be compacted with a powered hand tamper, or other approved method to at least 98% of maximum density as determined by AASHTO T-180

B. Backfill for precast manholes shall be drainfield limerock or specified pipe bedding material to a level to receive the manhole at the proper elevation.

END OF SECTION

SECTION 02505

CLEANING AND TESTING OF MAIN

PART 1. GENERAL

1.01 SCOPE OF WORK

A. The Contractor shall furnish all material, labor and equipment necessary to clean and test the force main and/or water main.

B. Pipelines for Potable Water Mains shall be pressure tested at 150 psi for a minimum of two (2) hours in accordance with Health Department requirements.

C. Pipelines for Sewage Force mains shall be pressure tested at 100 psi for a minimum of two (2) hours.

D. The Contractor is advised that he is solely responsible for any damage caused to the main or it's lining by cleaning operations and he shall be required to repair or replace, as required by the OWNER, any damaged pipe or lining.

E. Potable water mains shall be disinfected and approved for use by the Health Department prior to placing the main in operation.

1.02 SUBMITTALS

A. Prior to cleaning operations, submit in writing to the Engineer, the make, model and characteristics of the pig to be used in cleaning operations.

B. If the pig has not been previously approved for this use by the OWNER, the submittal shall be a formal shop drawing submittal for approval and accompanied by a letter signed by a responsible officer of the manufacturing firm specifically stating that the submitted item will not damage the lining or pipe and that it is suitable for cleaning pipe of the diameter and lining type utilized in the project.

C. Single submittals may be made to qualify different types of pigs for different linings or sizes of pipe but only one manufacturer's products shall be included in a particular submittal.

1.03 QUALITY ASSURANCE

A. Testing shall be in accordance with ANSI/AWWA Standard C-600, latest edition.

B. Cleaning and testing shall be performed in strict accordance with these specifications.

C. The Contractor is cautioned that Miami Dade County or other governing body having jurisdiction over the work location may have regulatory rules and ordinances prohibiting or limiting the discharge of water from any excavation into sanitary and storm sewer systems, or to canals and drainage ditches. The Contractor shall comply with all regulations of all governing agencies.

PART 2. PRODUCTS

2.01 MATERIALS

A. Pig for cleaning lines: Bare Swab No. 5B; density, 1 lb./ft.^{3}; Knapp Polly Pig, Inc., 1209 Hardy Street, Houston, Texas 77020, 1-800-231-7205, or approved equal.

PART 3. EXECUTION

3.01 CLEANING

A. As soon as the installation of each run of force main and/or water main is completed, and prior to installation of valves on the main in positions which would interfere with the cleaning operation, the line shall be cleaned by use of a pig with characteristics as specified above. The pig shall be driven through the line by water pressure and no cables, push rods or other mechanisms that might damage the pipe or lining shall be utilized in this operation.

B. Thorough pigging will be required and operations shall be sufficient to remove all deleterious materials left in the pipe by construction and shall meet the Engineer's approval. If required by the OWNER, pigging operations shall be scheduled to allow observation by the OWNER and no extra compensation will be allowed for such scheduling.

C. The Contractor shall furnish and install all piping necessary to carry out pigging operations, dispose of water and debris from the operation, and shall exercise care to prevent any damage to the surrounding area and adjoining or adjacent properties. The Contractor shall furnish either a new or in new condition pig for cleaning operations and the OWNER reserves the right to reject the pig and require provision by the Contractor of a new replacement at no additional cost to the OWNER.

D. The Contractor is required to install nightcaps, plugs or other devices acceptable to the Engineer at the open ends of the pipe installation at the end the work day. This requirement shall apply to installations both above and below the water table.

3.02 TESTING

A. The test pressure for potable water mains shall be 150 psi. The test pressure for sewage force mains shall be 100 psi.

B. After the main has been cleaned to the satisfaction of the Engineer, any valves which could not be placed prior to pigging operations shall be installed using care to prevent entrance of deleterious materials into the cleaned main or valve body. Thereafter the main shall be tested between line valves unless otherwise specified or permitted by the Engineer. Corporation stops shall be installed prior to testing and shall be included in the test with no leak permitted.

C. All fire hydrants, corporation stops, air release valves, flushing valves, and meter valves in the section being tested shall be opened and left open until water comes out of them, in order to remove as much air as possible from the line.

D. The Contractor shall furnish and install all necessary pumps, piping and fittings, including the corporation stop, to connect the section under test to the source of water. The test pump shall be a centrifugal or gear pump producing a steady pressure free of pulsation. Water from a fire hydrant shall be measured with a floating meter.

E. The Contractor shall furnish and install all necessary pumps, piping and fittings, including the corporation stops, to connect the section under test to the source of water. The test pump shall be a centrifugal or gear pump producing a steady pressure free of pulsation. The test pressure shall be maintained throughout the duration of the test. Unless otherwise permitted by the Engineer, no static testing will be allowed.

F. All corporation stops in the section being tested shall be opened and left open until water comes out of them, in order that as much air as possible may be removed from the line. Water shall be pumped into the line through the meter up to the required pressure, and pumping shall be continued to maintain that pressure for a period of 2 hours, or such longer period as the Inspector requires to inspect the line for leaks. Leakage shall be defined as the quantity of water that must be supplied into the newly laid pipe, or any valved section thereof, to maintain the specified leakage test pressure after the air in the pipeline has been expelled and the pipe has been filled with water.

G. Since the allowable leakage is defined in gallons per hour, testing shall be conducted in, at a minimum, two independent 1 hour test periods.

H. The maximum allowable leakage for ductile iron mains shall be determined by the following formula from the ANSI/AWWA Standard C600 "Installation of Ductile-Iron Water Mains and Their Appurtenances", latest edition:

$$L = \frac{SD \text{ times the square root of } P}{148{,}000}$$

1. Where: L is the allowable leakage in gallons per hour;
S is the length of pipeline tested in feet; D is the nominal diameter of the pipe in inches; and P is the average test pressure during the leakage test, in pounds per square inch gage.

I. No pipe installation will be accepted if the leakage is greater than that determined by the above requirements.

J. The Contractor shall locate and repair all leaks until the leakage is reduced to the limits specified. The Contractor may use the leak detector belonging to the OWNER but shall reimburse the OWNER for the actual cost of the operation of the instrument by OWNER personnel. Any observed leaks or any obviously defective joints or pipes shall be repaired or replaced as directed by the Engineer, even though the total leakage is below that specified above.

K. The tests and repairs shall be continued or repeated until the Engineer is assured that the leakage from the section of line under test is less than the amount specified.

END OF SECTION

SECTION 02536

PRECAST MANHOLES & COVERS

PART 1 - GENERAL

1.01 SCOPE OF WORK:

This section includes minimum construction requirements for standard sewer manholes and precast concrete wet wells. It also includes precast concrete manhole sections with bell and spigot joints with masonry transition to covering, anchorage, coating/lining and accessories.

1.02 REFERENCES:

Unless otherwise indicated, all materials, workmanship and practices shall be in accordance with the current editions of the following standards:

A. Florida Building Code

B. ACI 318, Building Code Requirements for Reinforced Concrete; ACI 350 Code Requirement for Environmental Engineer Construction Structures.

C. PCI MNL 116, Manual for Quality Control for Plants and Production of Precast Concrete Products.

D. ASTM C62 - Specification for Building Brick (Solid masonry units made from Clay or shale).

E. ASTM C478 - Precast Reinforced Concrete Manhole Sections.

F. ASTM A123 - Zinc (Hot-Dipped Galvanized) Coatings on Iron and Steel Products.

1.03 SUBMITTALS, INSPECTIONS:

Submit the following information for approval. Fabrication shall not begin until submission has been approved.

A. Satisfactory evidence that plant and production methods meet the requirements of PCI MNL 116 for the Quality Control of the Precast Plant, Concrete Batch Plant and Testing Lab.

B. Submit Design mix to the Engineer prior to fabrication.

C. Complete shop drawings of both concrete structure and castings and showing all dimensions, reinforcement data, concrete strengths, etc. If of a non-standard design or if required by the Engineer of Record submit design calculations and data. All computation shall bear the seal of a Professional Engineer registered in the State of Florida.

D. Manhole and Wet Wells: The OWNER shall have the option of witnessing the manhole wet well pour, reinforcing or formwork prior to fabrication. Provide the Engineer a schedule of the manhole fabrication at the preconstruction meeting.

E. Provide a rebar cutting lists for Pump Station Wet Wells. The rebar cut list is not required for standard manholes.

F. Cylinder breaks shall be done for each lot in accordance with FDOT Standards (max of 50 structures per LOT). The manufacturer shall maintain records of the cylinder breaks for each design mix. The 28 day concrete cylinder break reports shall be submitted to the OWNER once the 28 day before the project closeout.

1.05 QUALIFICATIONS:

A. Manufacturer: Company specializing in manufacturing products specified in this section with minimum five years documented experience. United Concrete Products, Landmark Precast, Concrete Products of the Palm Beaches, TJ Precast, US Concrete Products or Approved equal.

B. Quality Control Plan approved by the FDOT. The testing laboratory and batch plant shall be included in the FDOT Quality Control Plan.

C. The Precast Manufacturer shall have a stamp from the Quality Control Manager on each completed precast structure. The Quality Control Manager Stamp shall indicate that the manhole was constructed in accordance with ASTM C478 and Municipality Standards and the date that the structure was fabricated.

1.06 TRANPORTATION

A. The precast concrete structure shall cure for a minimum of 72 hours. Transport of the precast structure to the jobsite is not allowed during the 72 hour curing period.

B. Comply with all applicable requirements of FDOT Section 450-16 Handling, Storage, Shipping and Erection.

PART 2 - PRODUCTS

2.01 MATERIALS:

Precast manholes shall conform to the requirements of ASTM C478, latest edition, the Miami-Dade Water and Sewer Department Standard Details and the following:

A. Properties:

1. Reinforcement of Grade 60 bars. (Pump Station Wet Wells require rebars not wire mesh reinforcing).
2. Concrete 4,000 psi.
3. Water Cement Ratio: 0.40 to 0.34 Standard Manholes, 0.34 Pump Station Wet Wells.
4. Waterstops: Ribbed PVC Waterstop with centerbulb.

B. Cement shall be Type II with a **maximum aggregate size of #57**. Aggregate shall be **well graded** to produce a less porous and stronger concrete.

1. **Gravity Sewer System Manholes**: In sanitary sewage applications, all manholes receiving the discharge of a force main, connecting to a major sewer line or interceptor sewer terminal manhole within a 350 foot radius of the pump station, drop manholes, or where called for in the plans and/or specifications shall have a concrete protective coating or a antimicrobial admixture in the concrete mix.

   The antimicrobial admixture in the concrete mix is specified below:

   a. An antimicrobial agent, Con^{MIC}Shield®, or approved equal, shall be used to render the concrete uninhabitable for bacteria growth.
   b. Contractor shall mix the liquid antimicrobial additive with the total water content of the concrete mix design in a proportion of 1 gallon per cubic yard. In the case of repairs to damaged concrete a proportion of 2 gallons per cubic yard shall be utilized.
   c. In some instances all of the concrete in the structure will receive the additive and in other instances only a portion of the concrete will receive the additive. Hence, the Contractor shall apply the additive only as directed in the specific instance.
   d. Precast Plant shall submit a letter of certification to the OWNER, stating that the correct amount and correct mixing procedure was followed for all antimicrobial concrete.
   e. Con^{MIC}Shield® antimicrobial additive shall be as manufactured by Con^{MIC}Shield® Technologies, Inc.; 541 Tenth Street NW #233, Atlanta, GA 30318; Phone: (877)543-2094.

2. **Pump Station Wet Wells**

   a. Pump Station Wet Wells shall have Xypex/BASF Crystalline Waterproofing Admixture or approved equal, applied at 2 to 3% of the weight of portland cement in the wet well by volume. The Crystalline Waterproofing Admixture shall be used in lieu of painting the exterior of the structure with Bitumastic Coal-Tar Epoxy.

   b. Do not use Con-Shield with the Crystalline Waterproofing Admixture

   c. Concrete Protective Coating Preparation: The precast concrete structure with the Crystalline Waterproofing Admixture is required to cure for 28 days prior to application of the concrete protective coating. Prepare the interior wet well surface with an epoxy cement underlayment compatible with the concrete protective coatings approved for Pump Station Wet Wells, Epoxytec CPP, Tnemic 218 or approved equal.

C. Minimum shell thickness of manholes shall be eight (8) inches.

D. Lifting holes through the structure will not be permitted.

E. Three to five courses of brick shall be constructed atop the manhole corbel for height adjustment. Manhole adjustment grade rings may be utilized in lieu of clay bricks.

F. Precast Joints above Elevation +4.0. and Waterproofing

1. Standard Manhole: Ram-Nek preformed plastic joint filler, Swellseal Hydrophillic Waterstop by Deneef, or approved equal. Apply Non-Shrink Grout both inside and outside of the joint. Wrap the outside Corbel and Exterior joint with a heat activated high shrink membrane.

2. Pump Station Wet Wells: Ram-Nek preformed plastic joint filler, Swellseal Hydrophillic Waterstop by Deneef, or approved equal. Apply Xypex Concentrate Cementitous Slurry or approved equal to the exterior and interior of the joint between precast members for waterproofing.

G. Holes for pipe connections, with a diameter equal to the outside dimension of the connecting pipe plus an additional 4-inches, shall be formed in the manhole walls. No cutting or chipping of the pre-formed holes, or cutting additional holes in the precast concrete walls will be permitted.

H. The bottom slab shall be cast monolithically with the lower section and the longitudinal reinforcement extending into the slab. The free air drop of the mix shall not exceed five feet.

I. No construction joints will be allowed below an elevation of four feet above mean sea level. Construction joints will be allowed above elevation+4.0, if adequate keyways and waterstops, approved by the OWNER (Ribbed PVC waterstop with centerbulb), are provided. The OWNER may approve an alternate joint method in cases of excessively deeper and heavy structures.

J. Built-in ladders or climbing rungs will not be permitted in any sanitary sewer manhole and only in other structures where shown on the Plans and called for in the specifications.

K. Openings shall be sealed with hydraulic cement non-shrink grout on both the exterior and interior of the structure.

L. Furnish manholes with accessories listed under "Manhole Accessories", below.

M. Lid and Frame: See Section 05550, "Castings".

N. Waterproofing:
Xypex Crystalline Waterproofing Admixture C-1000R with red dye or approved equal, applied at 3% of the volume of Portland cement in the manhole by volume.
Rheomac 300D Admixture as manufactured by BASF with red dye applied at 2% of the volume of Portland cement in the manhole by volume.
The Crystalline Waterproofing Admixture may be used in lieu of painting the exterior of the structure with Bitumastic Coal-Tar Epoxy.
Note: The Engineer may accept certification from the precast fabricator in lieu of the red dye.

2.02 CLAY BRICK UNITS AND GRADE RINGS

A. Clay brick shall be used in manhole construction. Clay brick shall conform to ASTM Standard C32, "Building Brick (Solid Masonry Units Made from Clay or Shale)". Bricks shall have true edges and sharp corners and shall have been cured for at least 14 days before being placed in any wall. Under no circumstances shall brick with holes be utilized anywhere in construction of a manhole or other structure unless specifically called out on the Plans or in the Specifications.

B. Manhole adjustment grade rings may be utilized. Rings shall be made of 100% recycled HDPE and available in cone opening diameters of 24, 27, 30 and 36-inches. Slope adjustment shall be attained by rotation of “wedge” rings from 4.1% to 0% grade. Rings shall have been tested to withstand HS25 loading through at least 1,100,000 cycles without cracking or other damage. Rings shall not be damaged by hydrogen sulfide manhole conditions and shall be waterproof when assembled with approved butyl sealant. Ring shall weigh six pounds or less and be equipped with UV inhibitor. Rings shall have been in successful service in multiple locations within the US for at least ten years and shall be warranted for five years. Rings shall be LadTech, Inc. HDPE Recycled Adjusting Rings or approved equal.

C. Exterior Shrink Membrane not required on the HDPE Grade Rings.

2.03 MORTAR AND GROUT: As specified in Section 04060 and 03600, respectively. Only Type II cement shall be used.

2.04 REINFORCEMENT: As specified in Section 03300.

2.05 SUMP: Where required, formed integrally with the base slab.

2.06 CONCRETE PROTECTIVE COATINGS **(Gravity Sewer Manholes)**

A. For manholes standard manholes that do not have a concrete protective coating or an antimicrobial additive (ConShield)in the mix, coat the interior of the manhole with Bitumastic 300M or approved equal, 16 mils minimum thickness. The manholes with a concrete protective coating or ConShield anti-bacterial admixture shall not have Bitumastic on the interior of the manhole.

Locations that require a Concrete Protective Coating or the Con Shield Admixture:

1 Manholes receiving the discharge of a force main.
2 Manholes within a 350 foot radius of a pump station wet well.
3 Drop manholes (if a drop connection is added to an existing manhole the existing manhole shall be rehabilitated with a concrete protective coating).
4 Any manhole location determined by the Engineer to have the probability of generating large quantities of sewer gas.

B. All concrete protective coating systems shall be pre-approved by the Water and Sewer Department based on testing done within the WASD system. Only products that have had a successful test application within the Miami-Dade Water and Sewer Department system and approved by WASD forces shall be allowed.

PREAPROVED PRODUCTS LIST- concrete protective coatings (standard manholes)

1. **Available Manufacturers: The manhole coating products below have passed the WASD testing protocol and have been approved for use for rehabilitation of standard manholes. The manhole rehabilitation products shall be used as a complete system with no third party products used unless approved in writing by the coating manufacturer. A one year warranty on the complete coating system from the project completion is required.**

   a. **Uroflex as manufactured by Epoxytec International**
   b. **PPC as Manufactured by Polymorphic Polymers Corporation**
   c. **SP15 Spray Mortar, Sewer Guard HBS 100 Epoxy Liner by BASF**
   d. **Permaform MS-10,000 Fortified with ConShield or Cor-Guard Epoxy**
   e. **SprayRoq, Spray Wall and SprayShield GT Coating**
   f. **GEOKRETE System as manufactured by Quadex**
   g. **Mainstay DS-5 High Build Epoxy, Mainstay ML-72 Restoration Mortar**
   h. **GML Coating System: Green Monster Epoxy, GML-30 and GML-60 Epoxy Cement**
   i. **Raven Lining System: Raven 405 Epoxy, Raven 755 Epoxy Mortar**

2. The manhole chimney shall utilize a flexible concrete protective coating. The acceptable flexible interior coatings for the manhole Chimeny are Epoxytec Uroseal, Uroflex or Geokrete.

C. Due to the probability of sewer gas generation, all manholes receiving the discharge of a force main, connecting to a major sewer line or interceptor sewer, drop manholes, or within a 350-foot radius of the terminal manhole immediately upstream of the pump station shall be either constructed of concrete containing Con^{MIC}Shield® antimicrobial additive or lined on all interior concrete surfaces with a pre-approved concrete protective coating or approved equal. Concrete protective coating system shall fully protect openings, such as for pipes, to insure that corrosive attack cannot take place at these locations. Protective system design for these areas will be checked as shop drawings. Note that boot systems are not accepted by the OWNER.

   Since the proprietary grouts used to close the annular area between the manhole wall and pipe entering or leaving the manhole are not compatible to the addition of Con^{MIC}Shield® these areas require liner or coating (as acceptable to the Engineer) protection even in manholes constructed of concrete containing this material.

D. All manhole exterior surfaces, from finished grade to base, shall be coated with Carboline Bitumastic 300M, 2 coats 16 mils minimum thickness or have Xypex/BASF Crystalline Waterproofing Admixture, applied at 2 to 3% of the volume of portland cement in the manhole by volume. The Crystalline Waterproofing Admixture may be used in lieu of painting the exterior of the structure with Bitumastic Coal-Tar Epoxy.

E. If Con^{MIC}Shield® anti-microbial agent is used, interior coating and liners can be eliminated except as specified above.

2.07 CONCRETE ADDITIVE AND PROTECTIVE COATINGS **(Pump Station Wet Wells)**

A. Waterproofing Additive: Xypex Crystalline Waterproofing Admixture or approved equal, applied at 3% of the weight of Portland cement in the manhole by volume. The concrete protective coating shall be applied a minimum of 28 days after the casting of the reinforced concrete structure in order for new concrete to cure.

B. Epoxy Cement Underlayment to smooth and prepare concrete surface Epoxytec Ceramico, Tnemic 218 or approved equal.

C. Preapproved Concrete Protective Coating for Pump Station Wet Wells

1. Uroflex Coating System as manufactured by Epoxytec International
2. PPC as Manufactured by Polymorphic Polymers Corporation
3. or approved equal

2.08 MANHOLE ACCESSORIES:

All new sanitary sewer manholes shall be furnished with the following items. Where existing manholes will be modified or are scheduled to be refurbished, rehabilitation shall also include the following items unless otherwise approved by the OWNER.

A. Provide concrete protective coating system for manholes installed in locations identified to have high levels of sewer gas.

B. Provide high density polyethylene manhole infiltration inserts in accordance with Section 02625, unless the OWNER requires the installation of stainless steel insert.

C. Exterior Shrink Membrane on Corbel and Exterior Joint; <u>On all manholes</u> (excluding the HDPE grade rings)install a heat activated, high shrink membrane, on the manhole's exterior, at each section joint and from the cast iron frame to the corbel section. Membrane shall be Wrapid Seal, by Canusa Corrosion Protection and Sealing, or approved equal with the following properties:

PRODUCT COMPONENT	PROPERTY	TEST STANDARD	UNIT	RESULTS
ADHESIVE	Softening Point	ASTM E28	Deg. C (Deg. F)	100 (212)
	Lap Shear Strength	DIN 30 672	N/cm^2 (psi)	8 (12)
BACKING	Tensile Strength	ASTM D638	MPa (psi)	20 (2900)
	Elongation	ASTM D638	%	600
	Hardness	ASTM D2240	Shore D	46
	Abrasion Resistance	ASTM D1044	mg	45
SLEEVE	Peel Strength	ASTM D1000	N/cm^2 (psi)	15 (9)
	Water Absorption	ASTM D570	%	0.05

	Low Temp. Flexibility	ASTM D2671D	Deg. C (Deg. F)	-40 (-40)

PART 3 - EXECUTION

3.01 EXCAVATION:

A. Refer to Section 02314, "Excavation, Backfill and Fill for Structures" for specific procedures, requirements and testing methods appurtenant to the work under this Section.

B. Excavation shall extend to a level 12-inches below the level of the outside bottom of the base slab. If necessary, provide sheeting and shoring for the excavation.

C. Backfill resulting excavation with drainfield limerock or specified bedding material to a level to receive the structure at the proper elevation.

3.02 GENERAL INSTALLATION

A. The precast base shall be set level, with the walls plumb on the graded crushed rock bedding.

B. If any surfaces of structures are exposed to view and to a depth of 6 inches below grade, the Contractor shall fill all depressions and all air holes with mortar, dampen surfaces, and apply an approved bonding agent then spread slurry, consisting of one part cement and one and one-half parts sand, by damp loose volume, on the surface with clean burlap pads and sponge rubber floats. The Contractor shall remove any surplus by scraping and then rubbing with clean burlap. Finish surface shall be suitable to receive paint.

3.03 INSTALLATION OF MANHOLES

A. Place base slab and manhole sections plumb and level. Coat exterior of precast structure with Bitumastic 300M or approved equal. Install heat activated, high shrink membrane, on the manhole's exterior, at each section joint and from the cast iron frame to the corbel section.

B. During all backfilling operations, the backfill level shall be kept even on all sides of the structure. Exercise every precaution to prevent damage to, or unplanned loading of, the structures and its appurtenances.

C. Lay clay brick in running bond. A minimum of three and a maximum of five courses shall be constructed atop each manhole corbel. Lay masonry units in full bed of mortar, with full head joints, uniformly jointed with other work. Stucco inside and out with 3/4-inch of mortar.

D. Set cover frames and covers level without tipping, to correct elevations.

E. Exterior surfaces of all structures shall be painted prior to the installation as specified elsewhere herein.

F. Openings shall be sealed with non-shrink grout. No expanding grout shall be allowed.

G. After satisfactory installation and testing, all interior concrete surfaces of the new manhole shall be seal coated in accordance with Section 2.06-A.

H. The invert channels of the manhole shall be formed of brick or brick rubble thoroughly bedded and covered with sand-cement grout, accurately shaped to a semi-circular bottom conforming to the lower half of the connecting sewer pipe. Steep slopes outside the invert channels shall be avoided. Changes in size and grade shall be made gradually and evenly. Changes in the direction of the sewer or entering branch shall be a smooth curve with radius as long as practicable.

I. It shall be the Contractor's responsibility to assure that the frames and covers are set to match proposed finish paving grades at the manhole locations.

J. Gravity sewers shall connect to the manholes in accordance with Standard Details SS 7.0 and Section UC-250 "Gravity Sewer Systems".

3.04 ALTERNATE INSTALLATION

Installation methods given below in this Section shall only apply if permission is granted by the Engineer of Record to use the "Alternate Method of Construction" as specified elsewhere herein. All provisions of that Section shall be applied to the installation of the structures with the specific modifications as follows:

A. Excavation

Excavation shall be carried to a depth of two feet below the bottom of the base slab.

B. Special Bedding

1. Bedding shall be crushed stone or gravel meeting the requirements of ASTM Standard C33 "Concrete Aggregates", latest edition, gradation 67.
2. The bedding shall be placed in the excavation from cut bottom to the level of the bottom of the slab. Thereafter it shall be thoroughly rammed and tamped by use of a crane and weight or other means suitable to the Engineer of Record to provide a stable base for the structure. Tamping and, if necessary, additional filling shall be carried on until the Engineer of Record is satisfied that a suitably stable base has been created for the structure.

C. Backfill

1. After the structure is installed, special bedding material as specified immediately above shall be carefully hand or machine tamped around the structure up to a level of no more than eighteen inches above the water level. Thereafter the procedures and materials specified for backfill and compaction, shall be used to complete the installation.

2. During all backfilling operations the backfill level shall be kept even on all sides of the structure and the Contractor shall exercise every precaution to prevent damage to, or unplanned loading of, the structure or its appurtenances.

END OF SECTION

SECTION 02741

PRIME AND TACK COATS

PART 1 - GENERAL

1.01 SCOPE OF WORK

The work specified in this Section consists of the application of bituminous material on previously prepared base in accordance with these specifications and in conformity with the line, grades, dimensions and notes shown on the Drawings.

PART 2 - PRODUCTS

2.01 MATERIALS

A. Liquid Asphalt for Prime Coat shall be Asphalt Emulsion Prime (AEP) meeting the requirements of D.O.T. Specifications Section 916-4 and Section 300.

B. Liquid Asphalt for Tack Coat shall be Asphalt Emulsion Prime (AEP), conforming to the requirements of D.O.T. Specification Section 916-4 and Section 300.

2.02 EQUIPMENT

A. The pressure distributor used for placing the tack or prime coat shall be equipped with pneumatic tires having sufficient width of rubber in contact with the road surface to avoid breaking the bond of or forming a rut in the surface. The distance between the centers of openings of the outside nozzles of the spray bar shall be equal to the width of the application required, within an allowable variation of 2-inches. The outside nozzle at each end of the spray bar shall have an area of opening of not less than 25 percent, nor more than 75 percent in excess of the other nozzles which shall have uniform openings. When the application covers less than the full width, the normal opening of the end nozzle at the junction line may remain the same as those of the interior nozzle.

B. Application of prime or tack coat shall be done with a distributor approved by the Engineer of Record.

PART 3 - EXECUTION

3.01 PREPARATION

A. Before applying any bituminous material, all loose material, dust, dirt, and foreign material, which might prevent proper bond with the existing surface, shall be removed. Particular care shall be taken to clean the outer edges of the strip to be treated in order to insure that the prime or tack coat will adhere.

B. When the prime or tack coat is applied adjacent to curb and gutter, or any other concrete surface (except where they are to be covered with a bituminous wearing course) such concrete surfaces shall be protected by heavy paper or other protective material while the prime or tack coat is being applied. Any bituminous material deposited on such concrete surfaces shall be removed immediately.

3.02 WEATHER LIMITATIONS

No bituminous material shall be applied when the air temperature is less than 50°F in the shade, or when the weather conditions or the condition of the existing surface is unsuitable. In no case shall bituminous material be applied while rain is falling or when there is water on the surface to be covered.

3.03 APPLICATION OF PRIME COAT

A. After the base has been finished, the full width of surface shall be swept with a power broom supplemented with hand brooms and mechanical blowers prior to the application of the prime coat. Care shall be taken to remove all loose dust, dirt and objectionable matter. If deemed necessary, the base shall be lightly sprinkled with water immediately in advance of the prime coat. The prime coat shall be applied to the full width of the base.

B. The temperature of the prime material shall be such as to insure uniform distribution. The material shall be applied with a pressure distributor as specified above. The amount to be applied shall be sufficient to coat the surface thoroughly and uniformly without any excess to form pools or to flow off the base. For limerock base, the rate of application shall not be less than 0.10 gallons per square yard.

C. If the roadway is to be opened for use following the application of the prime material, a light uniform application of clean sand shall be applied and rolled. The sand shall be nonplastic, shall be free from silt and rock particles and shall not contain any sticks, vegetation, grass, roots or organic matter. After the sand covering has been applied, the surface may be opened to traffic.

3.04 APPLICATION OF TACK COAT

A. In general, a tack coat will not be used on primed bases except in areas which have become excessively dirty and cannot be cleaned or where the prime has cured and lost all of its bonding effect.

B. No tack coat shall be applied until the primed base or leveling course or new or existing asphaltic concrete has been cleaned and is free from sand, dust or other objectionable material.

C. The tack coat shall be applied with a pressure distributor as specified above. It shall be heated to a suitable consistency and applied in a thin uniform layer at the rate of between 0.05 gallons and 0.15 gallons per square yard.

D. The tack coat shall be applied sufficiently in advance of the laying of the wearing surface to permit drying, but shall not be applied so far in advance or over such an area as to lose its

adhesiveness as a result of being covered with dust or other foreign material. The tack coat shall not advance ahead of the paving by more than 300 feet in business or residential areas unless otherwise approved by the Engineer. Suitable precautions shall be taken by the Contractor to protect the surface while the tack coat is drying and until the wearing surface is applied.

END OF SECTION

THIS PAGE LEFT INTENTIONALLY BLANK

SECTION 02745

PAVEMENT REMOVAL AND REPLACEMENT

PART 1 - GENERAL

1.01 SCOPE OF WORK

A. Work included under this Section covers the furnishing of all labor, equipment and material required for cutting, removing, protecting, constructing, replacing or stabilizing all existing roadways, driveways and pavements.

B. All existing utility castings, including valves boxes, junction boxes, manholes, handholes, pull boxes, inlets and similar structures in the areas of trench restoration, pavement replacement and pavement overlay shall be adjusted by the Contractor to bring them flush with the surface of the finished work.

1.02 QUALITY CONTROL

The phrase "DOT Specifications" shall refer to the Florida Department of Transportation Standard Specifications for Road and Bridge Construction, latest edition. The DOT Specifications, are referred to herein and are hereby made a part of this Contract to the extent of such references, and shall be as binding upon the Contract as through reproduced herein in their entirety.

1.03 DAMAGE BY CONTRACTOR

A. The Contractor shall protect from damage by construction operations, all pavements, including all base courses and surface courses, within the work area.

B. Any base course or surface course beyond those limits, damaged as a result of the Contractor's operation, shall be restored in accordance with the applicable requirements of these Specifications, to the satisfaction of the OWNER, and to the satisfaction of the governing authority having jurisdiction over the work area.

C. Any damage to adjacent lanes of pavement will require the Contractor to resurface the entire lane width for a length, as approved by the OWNER. When the damage amounts to 25 percent or more in any one block (approximately 600 feet), the Contractor shall resurface the entire width of the lane in which the damage occurred for the entire block.

D. The Contractor is hereby notified that wherever the line for repaving for trenches extends one foot into the edge of the existing paving, he shall repave to this edge only. Full lane paving will not be required. Damage to the pavement beyond this line by the Contractor will require that he repave the full width.

E. In order to protect himself from being held liable for any existing damaged pavement, including detour routes, the Contractor is advised to notify in writing the authority having jurisdiction over the street where such defective pavement exists prior to proceeding with any work in the vicinity. A copy of all such notices shall be forwarded to the OWNER.

PART 2 - PRODUCTS

2.01 MATERIAL, GENERAL

A. Limerock Base: The limerock base shall consist of either one or two courses limerock obtained from local sources where the overburden was removed from the pits prior to mining operations. The limerock shall comply with the requirements of DOT Specifications, Section 200 and Section 911 for Miami Oolite limerock, with a maximum size of the aggregate to be 1-1/2 inches.

B. Prime Coat and Tack Coat shall be as specified Section 02741.

C. Asphaltic Concrete: The materials and construction of the asphaltic concrete patch and surface courses shall be Superpave Asphaltic Concrete TYPE SP 9.5 (Traffic C) conforming to Sections 330, 334 and 916 of the DOT Specifications.

PART 3 - EXECUTION

3.01 INSTALLATION, GENERAL

A. Permanent pavement repair shall be in accordance with the details shown in the Standard Details herein, with edges straight and parallel and patches rectangular in plan. Replace any paving, beyond the limits shown in the details and as called for in the Specifications, as required. Where trenches are located out of the existing pavement and damage occurs to the pavement, that pavement shall also be replaced by the Contractor.

B. Pavement markings removed or obliterated by the Contractor's operations shall be promptly replaced, in kind, to the satisfaction of the Miami-Dade County Department of Public Works, Traffic Engineering Division, or other authority having jurisdiction over the work area.

C. All equipment necessary for construction shall be on the job site in first class working condition. Spilling or dropping of petroleum products is prohibited and all defective equipment shall be removed or replaced immediately. The Contractor shall be subject to all DERM (Department of Environmental Resources Management) regulations and clean up requirements.

D. The percentages of maximum density for subgrade and limerock base specified herein are minimum. Greater percentages of maximum density shall be obtained, if so required, by the governing authority having jurisdiction over the work location.

E. Asphaltic concrete mixtures shall be obtained only from plants which comply with the requirements of D.O.T. Specifications, Section 320 as applicable, using materials specified herein, and producing the specified mixture. General construction requirements for all hot bituminous mixtures specified herein shall conform to D.O.T. Specifications, Section 330, as applicable.

F. Asphaltic concrete shall be laid only where the surface to be covered is intact, firm, cured and dry, and only when weather conditions are suitable. The temperature of the mixture at the time of spreading shall be within limits of Florida D.O.T. specifications or within 25 degrees of the temperature set by the OWNER. No mixture shall be spread when the air temperature is less than 40 degrees Fahrenheit.

G. Any mixture caught in transit by a sudden rain may be laid at the Contractor's risk, if the base is in suitable condition. Under no circumstances shall asphaltic material be placed while rain is falling, or when there is water on the area to be paved.

H. Subgrade: Roadway subgrades shall be stabilized to the minimum depth shown on the Drawings to a Limerock Bearing Ratio of not less than 40. Stabilizing shall be Type B as defined in Section 160 of the DOT Specifications. Stabilization may require the addition and thorough mixing in of crushed limerock, course limerock screenings, or any other stabilizing material acceptable to the OWNER. The stabilizing material shall be applied in such quantity that, after mixing and blending, the subgrade will have a LBR of not less than 40. Stabilizing material shall be mixed or blended in the subgrade material by plowing, scarifying, disking, harrowing, blading and mixing with rotary tillers until the mixed materials are of uniform bearing value throughout the width and depth of the layer being processed.

I. At least three density determinations shall be made on each day's final compaction operations on each course, and the density determinations shall be made at more frequent intervals if deemed necessary by the OWNER.

J. Limerock Base: The limerock base shall be constructed in accordance with Sections 200 and 911 of the DOT Specifications, to the thickness and width indicated on the Drawings.

K. After spreading of the base material is completed, the entire surface shall be scarified and shaped so as to produce the exact grade and cross section after compaction. For double course base, this scarifying shall extend a depth sufficient to penetrate slightly the surface of the first course. The maximum depth of each lift shall be 4-inches.

L. When the material does not have the proper moisture content to insure the required density, wetting or drying shall be required. If the material is deficient in moisture, water will be added and uniformly mixed in by disking the base course to its full depth. If the material contains an excess of moisture, it shall be allowed to dry before being compacted. As soon as proper conditions of moisture are attained, the material shall be compacted to an average density not less than 98 percent maximum density as determined in more than one course, the density shall be obtained in each lift of the base.

M. During final compacting operations, if blading of any areas is necessary to obtain the true grade and cross section, the compacting operations for such areas shall be completed prior to making the density determination on the finished base.

N. Unless otherwise directed by the Engineer of Record, the surface shall be "hard-planed" with a blade grader immediately prior to the application of the prime coat to remove the thin glaze or cemented surface and to allow free penetration of the prime material. The materials planed from the base shall be removed from the base area.

O. If cracks or checks appear in the base, either before or after priming, which in the opinion of the OWNER, would impair the structural efficiency of the base course, the CONTRACTOR shall remove such cracks or checks by rescarifying, reshaping, adding base material where necessary and recompacting.

P. Mixing Base and Subgrade: If at any time the subgrade material shall become mixed with the base course material, the CONTRACTOR shall, without additional compensation, dig out and remove the mixture, reshape and compact the subgrade and replace the materials removed with clean base material, which shall be shaped and compacted as specified above.

Q. Asphaltic Concrete: The spreading, compacting and jointing the wearing surface shall be in accordance with Sections 330 and 334 of the DOT Specifications to the thickness indicated on the Drawings.

3.02 TEMPORARY PAVING

A. Prior to commencing excavation, the asphalt surface shall be saw-cut within the limits of the allowable trench width. Temporary paving will be required along the entire route where the original paved surface is removed. Unless otherwise approved by the OWNER, temporary paving shall be placed the same day the trench is backfilled. The trench shall be backfilled up to a level 1 inch below the existing pavement surface and a temporary, cold mixed sand/asphalt pavement shall be constructed up to the level of the existing pavement surface. The liquid asphalt shall be Grade RC-70, conforming to the requirements of D.O.T. Specifications, Section 916-2. The sand shall conform to the requirements of D.O.T. Specifications, Section 902 for fine aggregate.

B. The cold mix is to be installed one block at a time, not crossing any intersection, or a maximum of 1,200 feet shall be completed before the Contractor may move forward with his excavation work. Backfill, compaction and temporary paving is to keep pace with the pipe installation. Written permission must be obtained from the OWNER and the municipal agency permitting the work to allow greater lengths than 1,200 feet. Permitting agencies may reduce the allowable limits in their permit, or for other unforeseen right-of-way conditions.

C. Prior to completion of the work and within a maximum of 30 calendar days, the Contractor shall remove the 1 inch of cold mix and surplus backfill. He shall replace it with the specified compacted limerock base course and asphaltic within the specified working limits. Municipal agencies permitting this work may accelerate the time for removal of the cold mix, at their discretion.

D. The temporary pavement shall be maintained by the Contractor in a condition satisfactory to the OWNER until its removal. Removal shall include any surplus backfill material. Replacement of the temporary pavement with permanent pavement shall be made within 30

days. In replacing the temporary paving with permanent pavement, all work shall be completed in sections compatible with specified traffic maintenance procedures.

E. The Contractor may elect to install a suitable temporary hot mix asphaltic pavement, to be left in-place, in lieu of cold mix, when the hot mix asphalt is left in-place and installed over properly compacted limerock base course. This temporary pavement shall be incorporated into the specified permanent pavement restoration as part of Type I paving restoration.

F. Sand seal on the limerock base course will not be permitted in lieu of temporary paving.

G. Unless otherwise approved by the OWNER, temporary paving, shall be placed within twenty-four hours following the completion of backfilling.

3.03 TYPE I PAVING REPAIR (Limerock Base - Asphaltic Concrete Surface)

A. Type I paving repairs shall be made with an 8-inch thick compacted limerock base and a minimum 2-inch thick asphaltic concrete surface, as detailed in the Standard Details. On Public Works roads asphaltic concrete shall have a compacted thickness of 2-inch, placed in a minimum of two (2) compacted 1-inch lifts.

B. The backfill previously placed and compacted shall be excavated to the required depth below the existing road surface and the existing paving shall be cut back beyond all excavations, using an abrasive disc saw to trim the edges to straight and true lines, minimum width for the limerock base shall be equal to the trench width plus 2 feet. Eight inches of limerock base shall be placed in two layers, each layer compacted to not less than ninety-eight percent (98%) density in accordance with Section 200 of D.O.T. Specifications. During rolling, the base shall be wetted down, as necessary, to secure the greatest possible compaction. After rolling, the entire surface of the base shall be thoroughly scarified to a depth of not less than 3 inches and shaped to conform to and be parallel with the existing surface, then watered and rolled again. Rolling and watering shall continue until the entire depth of the base is bonded and compacted into an unyielding mass.

C. If at any time the subgrade material becomes mixed with the limerock base course materials, the Contractor shall, without additional compensation, dig out and remove the mixture, reshape and compact the subgrade and replace the materials removed with clean rock which shall be watered and rolled until satisfactorily compacted.

D. After the limerock base course has been properly prepared and is dry and ready to receive the wearing surface, a tack coat of emulsified asphalt, in accordance with Section 02741, shall be applied at a rate of 0.10 gallon per square yard, immediately followed by the asphaltic concrete. The tack coat shall be applied to the entire limerock base uniformly, and shall thoroughly coat all surfaced. Care shall be taken to tack coat and bond the edge of surrounding pavement.

E. The asphaltic concrete shall be plant mixed, using the best grade of local aggregates of approved size and gradation and mixed with an approved binder and conforming the either the State of Florida Department of Transportation Specifications, Type SP-9.5 Superpave Asphaltic Concrete, Sections 330, 334 and 916 of D.O.T Specifications, or as ordered by the Engineer of Record.

F. Where the width of the repair permits, the asphaltic concrete plant mix material shall be placed by means of an approved mechanical spreader and finisher. The mixture shall be compacted to true grade and cross section by means of a tandem roller weighing not less than eight tons. The compacted asphaltic concrete mixture shall not be, in any case, less than one inch in thickness. Rolling shall proceed as closely behind the spreader as possible and all material shall be completely compacted the same day it is placed. The minimum width of the wearing surface shall be the same as the base.

3.10 ASPHALT COLD MILLING

A. The Contractor shall perform asphalt cold milling where called for on the Plans or as required for a complete installation, when approved or requested by the OWNER. Cold milling shall be done using an automated pavement planer capable of maintaining an accurate depth. Cold milling equipment shall meet the approval of the OWNER and governing agency having jurisdiction at the location of the pavement milling operation. All charges for maintenance of traffic, transportation of personnel, equipment and other mobilization charges shall be considered as incidental to the cold milling operation.

B. Cold asphalt milling shall be provided to improve the rideability of the finished pavement, lower the finished grade adjacent to an existing curb prior to resurfacing or to completely remove existing pavement. The overall length of the milling machine (excluding the conveyor) shall be a minimum of 18 feet, and having a minimum cutting width of six feet. The milling operation shall be operated to effectively minimize the amount of dust being emittedfrom the machine. Prewetting of the pavement may be required. In areas where milling is to be performed around OWNER utility structures such as manholes, valve boxes etc., proper caution shall be taken as not to damage any of the structures. Saw-cutting of the concrete surrounding the structure and using a pick or other means so as not to disturb the structure shall be employed to prevent any damage. Prior to opening an area which has been milled to traffic, the pavement shall be thoroughly swept with a power broom or other approved equipment to remove to the greatest extent practicable, the fine material which will dust under traffic. This operation shall be conducted in a manner so as to minimize the potential for creating a traffic hazard and to minimize air pollution.

C. The milling operation shall be continuous so as to complete each site without any delays. All milling operations shall be coordinated by the OWNER Inspector.

D. Traffic maintenance charges shall include the installation and maintenance of all traffic control and safety devices, in accordance with specifications outlined in the Dade County Public Works Manual. In addition, the Contractor shall provide all barricades, flashing warning lights and/or arrow boards necessary to maintain safety and warn motorists of the construction.

3.11 REPAIR OF DAMAGE PAVEMENT

A. All damage to pavement by the Contractor as a result of Work under this project shall comply with "DAMAGE BY CONTRACTOR", above, and shall be repaired in a manner satisfactory to the OWNER. The repair shall include the preparation of the subgrade, the placing and compacting of the limerock base, the priming of the base, the placing and maintaining of the surface treatment, all as specified herein.

B. The width of all repairs within the work area shall extend at least 12 inches beyond the limit of the damage. The edge of the pavement to be left in place shall be cut to a true edge with a saw or other acceptable method so as to provide a clean edge to abut the repair. The line of the repair shall be uniform with no irregularities. Repair of damage by the Contractor beyond the work area shall be approved by the governing agencies having jurisdiction over the work prior to commencing the work.

END OF SECTION

THIS PAGE LEFT INTENTIONALLY BLANK

SECTION 02765

PAVEMENT MARKINGS AND TRAFFIC SIGNS

PART 1 - GENERAL

1.01 SCOPE

This section consists of pavement markings and traffic signs on the Drawings, specified herein and as required for a complete installation and restoration of pavement and right-of-way.

1.02 QUALITY ASSURANCE

A. The phrase "DOT Specifications" shall refer to the Florida Department of Transportation Standard Specifications for Road and Bridge Construction, latest edition. The DOT Specifications, are referred to herein and are hereby made a part of this Contract to the extent of such references, and shall be as binding upon the Contract as though reproduced herein in their entirety.

B. Pavement markings for this Project shall conform to the Florida Department of Transportation Standard Specifications for Road and Bridge Construction, latest edition. Pavement markings removed or obliterated by the Contractor's operations shall be promptly replaced in kind to the satisfaction of the Dade County Department of Public Works, Traffic Engineering Division, or other authority having jurisdiction over the work area.

1.03 CERTIFICATION

The Contractor shall furnish the manufacturer's certification that all signs furnished conform to these specifications and shall replace or repair at his expense all signs that fail to meet this requirement.

PART 2 - PRODUCTS

2.01 PAVEMENT MARKING

Paint for pavement strips shall be as specified in Part 3, Execution.

2.02 REFLECTIVE MARKERS

Reflective markers shall be installed in the pavement in accordance with OSHA, DOT and Dade County Public Works requirements.

2.03 TRAFFIC SIGNS

A. General: Traffic regulating signs shall conform to the colors, dimensions and requirements of the Manual on Uniform Traffic Control Devices (ANSI) and displaying the lettering and symbols indicated on the Drawings.

B. Sign Panels and Support Members: Sign panels and support members shall conform to Aluminum Association Alloy 6061-T6.

C. Bolts: Bolts shall conform to Aluminum Association Alloy 2024-T4 with an anodic coating 0.0002-inches thick minimum and chromate sealed.

D. Nuts: Nuts shall conform to Aluminum Association Alloy 6269-T9.

E. Reflective Sheeting: Reflective sheeting shall conform to DOT Type A requirements.

F. Construction Warning Signs: The CONTRACTOR shall install traffic and warning signs during construction in accordance with OSHA, DOT and Dade County Public Works requirements.

PART 3 - EXECUTION

3.01 TRAFFIC PAINT

A. This type of pavement painting shall be used where no thermoplastic paint is required or as temporary paint during the time required for paving "cure" prior to application of thermoplastic paint markings.

B. Traffic paint used for this work shall conform with the requirements of Section 971-12 of the Florida Department of Transportation Standard Specifications for Road and bridge Construction, or, at the Contractor's option, fast dry traffic paint, as specified in D.O.T. Specifications, Section 971-13, may be used.

C. The colors of the paint shall be yellow or white, as existed before the repair.

D. All equipment shall be of a type and design which will readily produce the required uniformity of application of the stripes, both as to thickness of coating and alignment. The paint machine shall be of the spray type, capable of spraying the paint to the required "spread" without thinning of the paint. The paint tank shall be equipped with a mechanical agitator. The nozzle shall have cut-off valves which will apply broken or "skip" lines automatically. Each nozzle shall also be provided with suitable line guides, either metallic shrouds or air blasts.

E. Painting shall be done only during daylight hours and, as far as practicable, shall be terminated in time to permit sufficient drying by sunset. No paint shall be applied when moisture is present on the surface to be painted or when the air temperature is below 40 degrees F. Painting shall not be done when winds are sufficient to cause spray dust.

F. The surface which is to be painted shall be cleaned, by compressed air or other effective means, immediately before the start of painting, and shall be clean and dry when the paint is applied. Any vegetation or soil shall be removed from the pavement before edge striping is begun.

G. The paint shall be thoroughly mixed before it is poured into the painting machine and no thinning of the paint will be allowed at any time. Before the start of each day's work, the

paint container, the connections, and the spray nozzles on the machine shall be thoroughly cleaned with paint thinner or other suitable cleaner.

H. The traffic stripe shall be of the specified width, with clean, true edges and without sharp breaks in the alignment. A uniform coating of paint shall be obtained and the finished stripe shall contain no light spots or paint skips. Any stripes which do not have a uniform, satisfactory appearance, both day and night, shall be corrected.

I. All newly painted stripes, including edge stripes, shall be protected until the paint is sufficiently dry to permit vehicles to cross the stripe without damage from the tires. While the center line stripes are being painted, all traffic shall be routed away from the painting operations and the newly painted stripe. When necessary, a pilot car shall be used to protect the painting operations from traffic interference.

J. Any portions of the stripes damaged by passing traffic or from other causes shall be repainted.

K. Paint for temporary pavement markings shall also be used where thermoplastic markings are to be applied after the asphaltic concrete has "cured." The cure time shall be based on thermoplastic manufacturer's recommendations. However, in accordance with FDOT requirements, asphalt shall have been in place for 30 days before application of thermoplastic stripe.

3.02 THERMOPLASTIC TRAFFIC STRIPES AND MARKINGS

A. Thermoplastic pavement markings, including stripes, pavement messages, stop bars, directional arrows, reflective pavement markers and other miscellaneous items, shall be replaced as existed before the repair was made. The thermoplastic compound shall be extruded or sprayed onto the pavement surface in a molten state by mechanical means, with surface application of glass spheres, when required. Upon cooling to ambient pavement temperature, the compound shall produce an adherent pavement marking of specified thickness and width and capable of resisting deformation.

B. The colors of the compound shall be white or yellow, as existed before the repair.

C. Where thermoplastic markings are to be applied to concrete pavement, a sealing primer, as specified in F.D.O.T. Specifications Section 711-2.2, shall be applied in advance of the placing of the stripes.

D. The thermoplastic shall be applied to the pavement utilizing either extrusion or spray application equipment. The application equipment shall be so constructed as to provide continuous mixing and agitation of the material. Conveying parts of the equipment between the main material reservoir and the shaping die or gun shall be so constructed as to prevent accumulation and clogging. The equipment shall be constructed so that all mixing and conveying parts up to and including the shaping die or gun, maintain the material at the plastic temperature with heat transfer oil or electrical element controlled heat. Direct fire heat transfer will not be allowed.

E. The application equipment shall be so constructed as to insure continuous uniformity in the dimensions of the stripe. The applicator shall provide a means for cleanly cutting off square stripe ends and shall provide a method of applying "skip" lines. The use of pans, aprons, or similar appliances which the die overruns will not be permitted.

F. Glass spheres applied to the surface of the completed stripe shall be applied by an automatic bead dispenser attached to the striping machine in such a manner that the beads are dispensed almost instantaneously upon the installed line.

G. Special kettle(s) shall be provided for melting and heating the thermoplastic material. The kettle(s) shall be equipped with automatic thermostatic control devises to provide uniform temperature control and prevent overheating of the material. The applicator and kettle(s) shall be equipped and arranged as to satisfy the requirements of the National Fire Underwriters, the State of Florida, Dade County and any municipal authority applicable to where the work is being done.

H. Applicators shall be mobile and maneuverable to the extent that straight lines can be followed and normal curves can be made in a true arc. The applicator equipment to be used on roadway installations shall consist of either hand equipment or truck mounted units depending on the type of marking required.

I. The hand applicator equipment shall be insulated, have sufficient capacity to hold 150 pounds of molten material, and be sufficiently maneuverable to install crosswalks; lane, edge and center lines; arrows and legends.

J. The truck mounted unit for lane, edge and center lines shall consist of a mobile self-contained unit carrying its own material capable of operating at a minimum speed of five miles per hour while installing striping.

K. Application time, weather limitations and surface preparation shall be in accordance with F.D.O.T. Specifications Sections 710-4, 710-5 and 710-8. In accordance with FDOT requirements, asphalt shall have been in place for 30 days before application of thermoplastic stripe.

L. The material, when formed into traffic stripes or other markings, shall be readily renewable by placing an overlay of new material directly over an old line of compatible material in such a manner that no splitting or separation takes place.

M. The application temperature shall be within the range specified by the manufacturer of the thermoplastic compound being used.

N. All pavement edge lines, gore, island and diagonal strip markings, bike lane symbols and messages, wherever located, shall have a minimum thickness of 0.060 inch at the edges and a maximum thickness of 0.120 inch at the center. A minimum average film thickness of 0.060 inch shall be maintained. All lane lines, center lines, transverse markings (except shoulder markings) and pavement markings within traffic wearing area (such as dotted turning guide lines) shall have a minimum thickness of 0.090 inch at the edges and a maximum thickness of 0.188 inch at the center. A minimum average film thickness of 0.090

shall be maintained. All thickness measurements shall be an average in any three foot length.

O. The glass sphere top coating shall be applied by a type of glass sphere dispenser or gun which will embed the spheres into the line surface to at least one-half their diameter. The glass sphere top coating shall not incur more than a 10 percent loss during the first 30 days of traffic exposure.

P. Reflective pavement markers shall be installed as they existed before the repair. They shall be replaced with the appropriate color or colors and oriented in the correct direction as specified in Section 706 of the F.D.O.T. Specifications. Paving markings for this Project shall conform to the Florida Department of Transportation Standard Specifications for Road and Bridge Construction, as revised by the governing agency.

3.03 FABRICATION

Preparation of sign blanks and fabrication of reflectorized faces shall conform to the applicable requirements of DOT Sections 700-4 and 700-5.

END OF SECTION

THIS PAGE LEFT INTENTIONALLY BLANK

SECTION 02900

LANDSCAPING

PART 1 - GENERAL

1.01 SCOPE OF WORK:

A. Work included in this Section includes tree removal, tree relocations, furnishing and planting trees, plants and grass of the species, sizes and quality specified, fertilizing, watering, maintaining plants, guarantee and obtaining all permits from municipalities having jurisdiction over this work.

B. The schedule of trees and plants, if applicable, is shown on the drawing, and indicates the common and botanical names, the quantities and sizes of plants to be used.

C. Plants shall be sound, healthy and vigorous, well branched and densely foliated when in leaf with well developed root systems free of disease and insects, pests, eggs or larvae. No plants will be accepted unless healthy and showing satisfactory foliage conditions.

1.02 Solid sod and grass submittal to be submitted to the Engineer or Record for approval prior to installation.

PART 2 - PRODUCTS

2.01 GRASSING, SOLID SOD AND SEED:

A. General:

1) Solid sod shall be planted in the unpaved areas abutting the structures and extending to the limits shown on the Plans.

2) Grass seeding: All other unpaved areas shall be planted with grass seed and mulched.

3) When solid sod or grass seed is to be placed adjacent to or in close proximity to existing sod or grass, the Contractor is to use similar sod or grass and obtain approval from the Engineer of Record prior to installation. In public areas and right-of-ways the Contractor is also required to comply with Governmental Agency requirements and provide the OWNER with written approval of said agency prior to installation of grass and sod.

B. Materials:

1) Solid Sod:

(a) Solid sod shall be certified bitter blue St. Augustine Floratam. The sod shall be firm touch texture having a compact growth of grass with good root

development. It shall contain no weeds or other objectionable vegetation.

(b) The soil embedded in the sod shall be good clean earth, free from stones and other debris. The sod shall be free from fungus, vermin and other diseases. The sod and soil shall be approximately 2" thick.

(c) Before being cut and lifted, the sod shall have been mowed at least three times with a lawn mower, with the final mowing not more than seven days before the sod is cut. The sod shall be cut into uniform dimensions approximately 12" X 24". Abutting joints shall be free of open spaces with a tamped or rolled surface so that there are no joint openings.

2) Topsoil: Soil utilized for planting grasses shall be a mixture of pulverized 50% rock free siliceous sand and 50% clean mulch from an approved source. All ingredients shall be free of sticks, roots, rocks, lumps or other impurities or debris. All soil shall be delivered in a loose friable condition. Topsoil may be "unsuitable top soil" removed during the course of other work hereunder, if approved by the Engineer of Record. Topsoil shall be free of undesirable plants and seeds. Any such plants sprouting from areas of recent topsoil application shall be presumed to have originated in the topsoil and shall be eradicated from the area by the Contractor at his expense. Means of eradication shall be submitted to the Engineer of Record for approval.

C. Planting of Grassing:

1) Solid Sod: Unless otherwise directed by the Engineer, four inches of topsoil shall be placed. The ground area shall be saturated with water. Sod shall be placed on the graded and watered ground firmly butted on all sides by sod without leaving holes, slots, or depressions. Sod shall be top dressed with soil (herein before specified) where required to bring all fill to voids and provide a uniform grass matt if approved by the Engineer of Record. Soil shall firmly abut all structures to which it surrounds or contacts. Immediately after the grassing process, the entire grassed or mulched area shall be rolled thoroughly with a cultipacker traffic approved roller, or other 1,000 pound roller. At least two trips over the entire area will be required.

2) Grass Seeding: As above, place four inches of topsoil and saturate with water. Thereafter seed and mulch

D. Fertilizing Grassing:

1) Commercial fertilizers shall comply with all Federal, State and County fertilizer laws.

2) The numeral designations for fertilizer indicate the minimum percentage (respectively) of (1) total nitrogen, (2) available phosphoric acid, and (3) water soluble potash, contained in the fertilizer.

3) Designations may be approved specifically for a particular project and if liquid fertilizer other than that of chemical designation 8-8-8 is used, the total nitrogen content shall not exceed 12 percent.

4) At the Contractor's option liquid or dry fertilizer may be used. All grass shall be fertilized and watered in during the planting operation using the application rate and method directed by the manufacturer of the fertilizer used.

E. Guarantee and Maintenance of Grassing:

1) Guarantee:

(a) The Contractor shall guarantee all grasses for a period of six months from the date of acceptance of the completed overall project from the Contractor.
(b) The Contractor shall guarantee the grasses shall be alive, free of disease and have a healthy appearance at the end of the guarantee period.
(c) During the guarantee period, the Contractor shall replace any grass which is diseased, dead or visually unsightly within 3 days when requested in writing.

2) Maintenance:

(a) The Contractor shall maintain all grass guaranteed above for the period of the guarantee. Such maintenance shall include filling, leveling, and repairing eroded areas, replanting areas where the establishment of the grass does not develop satisfactorily, and watering as required. In no case shall such maintenance be less than 3 weeks for watering and 6 weeks for remaining maintenance care.
(b) The maintenance of the grass shall include, regular mowing, one application of approved dry or liquid fertilizer to the grasses guaranteed above. The fertilizer shall be applied and watered in as directed by the manufacturer. The time of fertilizing shall be approved.
(c) The Contractor shall be required under the maintenance of the guaranteed grasses to safeguard and take all possible precautions against damage from the elements and other possible damage. The Contractor shall be required to clean up the effected landscape area during the maintenance period due to any such event. The Contractor shall not be responsible to replace grasses properly protected under this item of the specifications, damaged by the events beyond his control.

2.02 PLANTS AND TREES: (If required by relocation and if shown on the drawings)

A. Grade Standards and Quality:

1) Quality of all plants shall be at least equal to that defined as No. 1 by the State Plant Board of Florida in Grades and Standards for Nursery Plants, Part I, 1963 Revised Edition, and Part II, Palms and Trees.

2) All plants shall be sound, healthy and vigorous, well branched and densely foliated when in leaf. They shall have healthy, well developed root systems and shall be free of disease and insect pests, eggs or larvae.

3) No plants will be accepted unless they are healthy and show satisfactory foliage conditions.

4) All plants shall conform to the measurements specified or indicated on the Drawings except that up to 10 percent of undersized plants in any one variety or grade may be used provided there are sufficient oversized plants to make the average equal to or above specified grade. Plants larger than specified may be used if approved by the Engineer of Record, but use of such plants shall not increase the Contract price. The spread of roots or ball of earth for larger plants shall be increased in proportion to the size of the plant.

B. Plant Designation: With reference to method of cultivation, root system status, etc., plants for landscaping shall be classified under the following designations:

1) Balled and Burlapped:

(a) Plants so classified shall be dug with firm natural root balls of earth, of sufficient diameter and depth to include most of the fibrous roots. The root ball of these plants shall be properly wrapped with burlap sack material and remain protected and moist until they are planted. Plants whose burlapped balls have cracked or become sagging, or plants showing scars from rope and cable marks or other improper handling are not acceptable. All balled and burlapped plants which cannot be planted immediately upon delivery shall be set on the ground and shall be well protected with soil, wet moss, or other acceptable material. The plants shall be set with the burlap cover intact and with the burlap showing, until inspection. At final inspection, the burlap may be cut away to ground level and completely covered with soil.

(b) It is required that, balled and burlapped materials, 1½ inches or more in caliper, shall be root-pruned at least 45 days before being dug and such fact shall be certified on accompanying invoices. Where, in the opinion of the Engineer of Record following his inspection of the grower's stock, adequate root pruning is being obtained by the grower's general cultivating practices, he may consider such fact as meeting this requirement.

2) Wire Balled and Burlapped:

(a) Plants grown in soil of a loose texture which does not readily adhere to the root system shall have sound hog wire placed around the burlapped ball before the plant is removed from the excavation. The wire shall be looped and tensioned until the burlapped ball is substantially packaged so as to prevent loosening of the soil around the roots during handling.

(b) Wire balled and burlapped plants shall otherwise comply with the requirements for balled and burlapped plants described in 1 above.

3) Container Grown Plants:

(a) Container grown plants shall have been grown in a container large enough and for sufficient time for the root system to have developed well enough to hold its soil together firm and whole. No plants shall be loose in the container. Plants which have become pot bound or for which the top system is too large for the size of the container, will not be acceptable.

(b) All containers with vertical sides shall be cut and opened fully, in a manner

such as will not damage the root system. Container grown plants shall not be removed from the container until immediately before planting, when all due care shall be taken to prevent damage to the root system.

4) Bare-Root Plants: No bare-root plants shall be used unless specifically required by the Engineer of Record or called for on the drawings.

5) Palms:

a) Palm species shall have the roots adequately wrapped before transplanting except when they are container grown. Burlapping will not be required if the palm is carefully dug from marl or heavy soil that it adheres to the roots and retains its shape without crumbling. During transporting and after arrival, root balls of palm shall be carefully protected from the wind and exposure to the sun. After delivery to the job site, if palm is not planted within 24 hours, the root ball shall be covered with a moist material.

b) All moving of sabal, coconut and royal palms shall be in accordance with Heavy Trunk Palms, as described in "Florida Grades and Standards for Nursery Plants, Part II".

6) Rooted Cuttings: Cuttings shall be kept moist at all times. They shall be rooted in a medium other than wood shavings and have at least 4 root tips of ½-inch or longer.

C. Transportation and Inspection:

1) Plant transportation shall comply with all Federal and State regulations therefor and, upon delivery at the site, all plants shall be inspected for conformity to specifications and for handling damage. Rejected plants shall be removed immediately from the site by the Contractor.

2) Foliage trees when moved in full leaf shall be treated with "Wilt Pruf" or "Plantguard", as they are loaded at their growing site. This material shall be applied to the entire tree with a fine spray at a dilution of 1 part "Wilt Pruf" or "Plantguard" to 15 parts of water.

3) Trees which have to be transported in excess of 10 miles to reach the job site, shall be covered with a 70 percent shade-cloth-tarp, or equal in order to prevent wind burn.

4) Immediately following the delivery and inspection at the job, all plants with exposed roots shall be heeled-in moist soil or peat moss. All plants heeled-in shall be properly maintained by the Contractor until planted.

5) The balls of balled and burlap plants, must, if not immediately planted after delivery and inspection, be adequately protected by covering until removed for planting, in a manner appropriate to prevailing conditions and in accordance with accepted horticultural practices. The Contractor shall, in loading, unloading, or handling of plants, exercise utmost care to prevent injuries to the branches or roots of the plants. The solidity of the ball of balled and burlapped plants shall be carefully preserved. Handling of the plant by parts other than the ball shall be cause for

rejection of such plant. Bare root plants which have been heeled-in shall be properly handled during the distribution of planting beds.

D. Planting Materials:

1) Planting Soil: Planting soil shall be a pulverized mixture of 50% rock free siliceous sand and 50% clean mulch from an approved source. All ingredients shall be free of sticks, roots, rocks, lumps, or other impurities or debris. All soil shall be delivered in a loose friable condition.

2) Fertilizer:

(a) Fertilizer shall be as specified in subsection 2.01-D, herein.
(b) Fertilizer shall be selected and used as recommended by the manufacturer for each particular plant.

3) Mulch: Mulch shall be ground bark, bark peelings, peat, hay or straw. Cypress mulch shall not be used because its harvest degrades cypress wetlands.

4) Anti-Desiccant: Anti-desiccant shall be "Wilt Pruf", "Plantguard", or equal, delivered in the manufacturer's containers and used in accordance with the manufacturer's instructions.

5) Water:

(a) Water for the irrigation of the new plantings during the progress of construction shall be provided by the Contractor in accordance with the provisions previously specified.
(b) The Contractor shall furnish adequate watering equipment and shall continue watering to properly establish the new plantings throughout the maintenance period.

6) Wire: Wire for the bracing and guying shall be pliable No. 12 or No. 14 gauge galvanized soft steel wire.

7) Stakes and Ties: Stakes and ties shall be provided in accordance with the requirements of PART 3 EXECUTION, below.

PART 3 - EXECUTION

3.01 EXCAVATION OF PLANT HOLES:

A. Plant hole excavations shall be roughly cylindrical in shape, with the sides approximately vertical. Plants shall be centered in the hole, with the trunk location as shown in the Plans.

B. Bottoms of the holes shall be loosened at least 6-inches deeper than the required depth of excavation.

C. Holes for balled and burlapped and wire balled and burlapped plants shall be large enough to allow at least 8-inches of backfill around the earth ball. For root balls over 18-inches in diameter, this dimension shall be increased to 12-inches.

D. Where excess material has been excavated from the plant hole, the excavated material shall be disposed of as and where directed by the Engineer of Record.

E. PREPARATION OF GROUND

1) Four inches minimum thickness of topsoil shall be placed over the areas off the right of way on which the sod is to be placed.

F. APPLICATION OF FERTILIZER

1) Before applying fertilizer, the soil pH shall be brought to a minimum range of 6.0 - 7.0.

2) The fertilizer shall be spread uniformly over the area to be sodded at the rate of 500 pounds per acre, by a spreading device capable of uniformly distributing the material at the specified rate. Immediately after spreading, the fertilizer shall be mixed with the soil to a depth of approximately 4-inches.

3) On steep slopes, where the use of a machine for spreading or mixing is not practicable, the fertilizer shall be spread by hand and raked in and thoroughly mixed with the soil to a depth of approximately 2-inches.

G. PLACING SOD

1) The sod shall be placed on the prepared surface, with edges in close contact and shall be firmly and smoothly embedded by light tamping with appropriate tools. Sod areas abutting concrete, asphalt or other applicable surfaces shall have the soil depressed at edges of the pavements so that the cut grass does not protrude over 2-inches above the adjacent property.

2) Where sodding is used in drainage ditches, the setting of the pieces shall be staggered so as to avoid a continuous seam along the line of flow. Along the edges of such staggered areas, the offsets of individual strips shall not exceed 6-inches. In order to prevent erosion caused by vertical edges at the outer limits, the outer pieces of sod shall be tamped so as to produce a featheredge effect.

3) On steep slopes, the Contractor shall, if so directed by the Engineer of Record, prevent the sod from sliding by means of wooden pegs driven through the sod blocks into firm earth, at suitable intervals.

4) Sod which has been cut for more than 72 hours shall not be used unless specifically authorized by the Engineer of Record after his inspection thereof. Sod which is not planted within 24 hours after cutting shall be stacked in an approved manner and maintained and properly moistened. Any pieces of sod which, after placing, show an appearance of extreme dryness shall be removed and replaced by fresh, uninjured pieces.

5) Sodding shall not be performed when weather and soil conditions are, in the Engineer of Record's opinion, unsuitable for proper results.

H. WATERING

1) The areas on which the sod is to be placed shall contain sufficient moisture, as determined by the Engineer of Record, for optimum results. After being placed, the sod shall be kept in a moist condition to the full depth of the rooting zone for at least 2 weeks. Thereafter, the Contractor shall apply water as needed until the sod roots and starts to grow for a minimum of 60 days (or until final acceptance whichever is latest).

3.02 UNDERGROUND OBSTRUCTIONS:

A. In the event that rock, underground construction work, utility lines or obstructions out of the ordinary are encountered in any plant hole excavation, alternative locations will be selected by the Engineer of Record.

B. Where locations cannot be changed and the obstructions may be removed, the obstructions shall be removed to a depth of not less than 3-feet below grade and not less than 6-inches below bottom of balls or roots when plant is properly set at the required grade.

3.03 SETTING OF PLANTS:

A. When lowered into the hole, the plant shall rest on a prepared hole bottom such that the roots are level with, or slightly above, the level of their previous growth and so oriented such as to present the best appearance. The Contractor, when setting plants in holes, shall make allowances for any anticipated settling of the plants.

B. The backfill shall be made with planting mixture as specified hereinbefore and shall be firmly rodded and watered-in, so that no air pockets remain. The quantity of water applied immediately upon planting shall be sufficient to thoroughly moisten all the backfilled earth. Plants shall be kept in a moistened condition for the duration of the Contract.

3.04 STAKING AND GUYING:

A. When called for on the Drawings or directed by the OWNER, plants shall be staked in accordance with the following provisions:

1) Small Trees: For trees and shrubs of less than 1-inch caliper, the size of stakes and the method of tying shall be such as to rigidly support the staked plant against damage caused by wind action or other effects. Trees larger than 1-inch and smaller than 1½ inch caliper shall be staked with a 2-inch square stake driven at least 24-inches in the ground and extending to the crown of the plant. The plant shall be firmly fastened to the stake with two strands of 14 gauge soft wire, enclosed in rubber hose, or other approved covering. The wire shall then be nailed or stapled to the stake to prevent slippage.

2) Medium Trees: All trees, other than palm trees, larger than 1½-inch caliper and smaller than 2½-inch caliper shall be staked with two or more, 2-inch by 2-inch stakes, 8-feet long, set 2-feet in the ground. The tree shall be midway between the stakes and held firmly in place by two strands of 12 gauge wire, applied as specified above for single stakes. Tie wires shall be tightened and kept tight by twisting.

3) Large Trees: All trees, other palm trees, larger than 2½-inch caliper, shall be guyed from at least 3 points with double strands of 12 gauge wire. Guy wires shall be anchored to 2-inch by 4-inch stakes, 24-inches long, driven into the ground at least 2-feet and sufficient that the top of the stake is at least 3 inches below the finished ground level. In firm rock soils, No. 4 steel reinforcing rods or ½-inch pipe may be used instead of 2 by 4's. Tie wires shall be securely fastened to the tree by means of a collar of rubber hose, or other approved material. Guy wires shall be tightened and kept tight by twisting.

4) Palm Trees: Brace palm trees with three or more 2-inch by 4-inch wood braces, toenailed to cleats which are securely banded at two points to the palm, at a point at least 6-feet above the ground. The trunk shall be padded with five layers of burlap under the cleats. Braces shall be approximately equidistantly spaced and secured underground with 2-inch by 4-inch by 24-inch stake pads. In firm rocky soils, No. 4 steel reinforcing rods or ½-inch pipe is acceptable.

3.05 PRUNING:

All broken or damaged roots shall be cut off smoothly and the tops of all trees shall be pruned in a manner complying with standard horticultural practice. At the time pruning is completed, all remaining wood shall be alive. All cut surfaces of 1-inch or more in diameter, above the ground, shall be treated with an approved commercial tree paint.

3.06 MULCHING:

Within one week after the planting, mulch material, approved by the Engineer of Record, shall be uniformly applied to a minimum thickness of 2-inches, over the entire area of the backfilled hole or bed. The mulch shall be maintained continuously in place until the time of final inspection. Mulch is not required if other ground surface covers, such as rooted cuttings are called in the Plans.

3.07 INSPECTION:

On completion of the work, the Engineer of Record will inspect all planting work. The Contractor shall repair or replace all defective work, whichever is unsatisfactory to the Engineer of Record or the OWNER. Preliminary acceptance of all plant materials will be given only after the materials are planted and after meeting all requirements prescribed herein.

3.08 MAINTENANCE:

A. Maintenance shall begin immediately after each plant is planted and shall continue until

all work under this Contract has been completed and final acceptance is obtained from the OWNER, however, the minimum period of this maintenance shall not be less than 60 days even if it extends beyond final acceptance of contract. Plants shall be watered, mulched, weeded, pruned, sprayed, fertilized, cultivated and otherwise maintained and protected. Settled plants shall be reset to proper grade position, planting saucer restored and dead material removed. Guys shall be tightened and repaired.

B. Defective work shall be corrected as soon as possible after it becomes apparent. Upon completion of planting, the Contractor shall remove from the site excess soil and debris, and repair any damage to structures, etc., resulting from planting operations.

3.09 GUARANTEE:

The Contractor shall guarantee all planting work for a period of six months after the date of final acceptance. During the guarantee period, the Contractor shall replace at no cost to the OWNER any plant that dies or is not established within the guarantee period. Any plants missing or defective shall be furnished or replaced in a manner satisfactory to the OWNER.

END OF SECTION

SECTION 03300

CAST-IN-PLACE CONCRETE, REINFORCING AND FORMWORK

PART 1 GENERAL

1.01 DESCRIPTION

A. Work included: Provide all labor, materials, equipment, fabrication, incidentals, transportation, placing and supervision necessary to complete all cast-in-place concrete work, its finishing, and all related work called for by the Contract Drawings and/or Specifications, or reasonably inferable from either or both, as needed for a complete and proper installation.

B. Related work: Work affecting this Section includes, but is not limited to:

1. Shop Drawings-Per General Conditions and as specified herein.
2. Materials and storage thereof.
3. Reinforcing-Bar and fabric.
4. Accessories of every nature, including form tie system.
5. Formwork and removal thereof, including shoring and reshoring.
6. Concrete proportions and mixes.
7. Placing of concrete.
8. Admixtures.
9. Joints, metal joint screeds and joint fillers.
10. Finishes of all types.
11. Protection and curing.
12. Patching.
13. Laboratory Testing.

1.02 QUALITY ASSURANCE

A. Unless otherwise indicated, all materials, workmanship and practices shall conform to the requirements of ACI 301-96 "Specifications for Structural Concrete for Buildings", except as modified by supplemental requirements hereinafter.

1.03 STANDARDS

A. ACI 301-96 Specifications for Structural Concrete.

B. ACI 318-95 Building Code Requirements for Reinforced Concrete.

C. Florida Building Code, latest edition.

D. ACI 117-90 Standard Specifications for Tolerances for Concrete Construction and Materials.

PART 2 PRODUCTS

2.01 MATERIALS

A. Materials for Concrete:

1. Cement shall conform to the following: Portland Cement ASTM C150, normal, type I or type II. Provide domestic cement of one type and from same source for entire project.

2. Mineral Admixtures:

   a. Fly Ash: Shall conform to ASTM C 618. 20% maximum of total cementitious weight.
   b. Ground Blast Furnace Slag: Shall conform to ASTM C 989-93. 30% maximum of total cementitious weight.

3. Chemical Admixtures: The following admixtures are permitted, but require written approval from the Engineer:

   a. Air Entraining Admixture: Comply with ASTM C260. "Specifications for Air-Entraining Admixtures for Concrete.
   b. Water Reducing Admixture: Comply with ASTM C494 "Specifications for Chemical Admixtures for Concrete, Type A and compatible with air entraining admixture.
   c. Water Reducing and Retarding Admixture: Comply with ASTM C494, "Specifications for Chemical Admixtures for Concrete, Type D, and compatible with air entraining admixture.
   d. High Range Water Reducing Admixture: Comply with ASTM C494, "Specifications for Chemical Admixtures for Concrete, Type F or G, and compatible with air entraining admixture. (Including superplasticizer to reduce water content.)
   e. Admixtures containing added calcium chloride are not permitted.

4. Aggregates: Shall conform to ASTM C 33 and shall be quarried/mined in fresh water. Aggregates from salt water or brackish water are not permitted. Coarse aggregate size shall not exceed:

	Concrete member	Size	
a.	Walls	3/4"	67#
b.	Beams or structural slabs not on ground	3/4"	67#
c.	Columns and all other concrete	1"	57#
d.	Drilling concrete pad or slabs on ground	1"	57#

5. In sanitary sewage applications, where called for in the plans and/or specifications an antimicrobial admixture as specified below shall be utilized:

   a. An antimicrobial agent, Con^{MIC}Shield®, or approved equal, shall be used to render the concrete uninhabitable for bacteria growth.

b. Contractor shall mix the liquid antimicrobial additive with the total water content of the concrete mix design in a proportion of 1 gallon per cubic yard. In the case of repairs to damaged concrete a proportion of 2 gallons per cubic yard shall be utilized.

c. In some instances all of the concrete in the structure in will receive the additive and in other instances only a portion of the concrete will receive the additive. Hence, the Contractor shall apply the additive only as directed in the specific instance.

d. Contractor shall submit a letter of certification to the OWNER, stating that the correct amount and correct mixing procedure was followed for all antimicrobial concrete.

e. Con^{MIC}Shield® antimicrobial additive shall be as manufactured by Con^{MIC}Shield® Technologies, Inc.; 541 Tenth Street NW #233, Atlanta, GA 30318; Phone: (877)543-2094.

B. Portland cement and reinforcing steel: Comply with ACI 301-96 and, with all modifications and supplements thereto listed in Part 3 of this specifications.

C. Burlap mats: Conform to AASHTO Specification M182. (Burleen non-staining mats.)

D. Epoxy bonding agent: A two (2) component, solvent free, moisture insensitive structural epoxy adhesive conforming to ASTM C881-90 Type II, Sikadur 32 Hi-Mod, as manufactured by Sika Corp., Concresive 1090 Liquid by Master Builders or approved equal.

E. Anchor bolts, nuts and washers: Conform to ASTM A449-89, hot-dip galvanized.

F. Dovetail slots: Galvanized steel, 22 gauge, 1"x 1", with 5/8" throat, fiber filled.

G. Forms:

1. Plywood Forms: PS-1, B-B Concrete Form, Class I, exterior type, mill oiled and edge sealed. Thickness shall be as required to support concrete at the rate placed, but not less than 3/4".
2. Steel Forms: Uncoated steel, 3/16"-inch minimum thickness, fabricated to close tolerances, protected only by the specified release agent, braced so as not to dent, bend or dimple under wet concrete loads, vibrator impact and tool impact. Maintain steel forms in rust free condition by use of steel wool and light grinding, followed by coats of the specified release agent. Forms should be adjustable to be brought into true alignment without steps or ridges.

H. Form release agent:

1. For plywood forms use a natural non-petroleum base, non-staining and non-retarding release agent that will effectively prevent absorption of moisture and prevent bond with concrete, and leaves the concrete with a paintable surface.
2. For steel forms, use an approved material that will not stain, color or otherwise affect

the finish of the concrete. Form coating shall not be detectable on finished surfaces.

3. Round column forms: Provide seamless fiber forms with the three plies nearest to the interior surface of the form deckled or scarfed and overlapped to minimize spiral gaps or seams on the column surface.

I. Form Ties: Steel rod type with integral waterstops and cones, and with ends or end fasteners that can be removed without spalling the concrete and which leave a hole equal in depth to the required reinforcement clearance, but not less than 2 inches from the formed face of the concrete. Wire tie, banding wire and wood spreaders will not be permitted.

J. Form Inserts:

1. Bevel or chamfer strips: Wood or non-staining plastic, 3/4" wide on each leg at exposed edges of concrete members, unless otherwise noted on plans.
2. Tongue and Groove Joint Forms: Minimum 24 gauge with steel stakes and splice plates. Forms shall be designed for joints not to receive a poured seal.
3. Pipe hangers and other utility supports: AISI Type 316 stainless steel.

K. Non-Shrink Grout: Non-shrink, non-metallic grout conforming to ASTM C 1107 Grade B or Grade C only. Grout must meet ASTM C 1107 at a temperature range of 50 F to 90 F at a flowable consistency.

L. Grout for Surface Repair and Bond Coat:

1. For repair, one part Portland cement to two parts fine sand, and a 50%of water and 50% Acryl 60 or equal (Thoroseal or Acryl Set Bonding Agent by Master Builders) to produce a stiff mortar.
2. For bond coat, one part Portland cement to one part sand, and a 50% of water and 50% Acryl 60 or equal (Thoroseal or Acryl Set Bonding Agent) to produce a slurry mix.

M. Moisture Barrier: Kraft paper and glass reinforcing fibers sandwiched between 2 layers of polyethylene film with a permeance rating of maximum 0.1 as per ASTM E-96, Procedure A.

N. Preformed Expansion Joint Filler: Non-extruding type, self expanding cork, 3/4", 1", and 1½" cork (not to be used for sidewalks), conforming to plans or as otherwise noted on drawings, conforming to the requirements of ASTM D1752, Type II, and compatible with joint sealant compound.

O. Joint Sealant Compound: Non-sag, 2 component, solvent free, moisture insensitive, flexible, epoxy resin conforming to the requirements ASTM C920-87 Type M, Grade NS. Additionally, the sealant must be recommended by the manufacturer to perform under continuous immersion in water.

P. Polyurethane Elastomeric Sealant: Sikaflex-2c, NS/SL or approved equal. Provide a 2-component, premium-grade, polyurethane-based, elastomeric sealant. It is principally a chemical cure in a non-sag and self-leveling consistency. Sealant shall meet ASTM C-920 and Federal Specifications TT-S-00227E.

1. Joint Movement: +50%.

Q. Waterstops:

1. Volclay Waterstop-RX or approved equal. Flexible strip of bentonite waterproofing compound in coiled form.

   a. Chemical Composition:

      1) Butyl Rubber-Hydrocarbon: 24.9% by weight; ASTM D-297.
      2) Bentonite: 75 % by weight; SS-S-210-A.
      3) Volatile Matter: Below 1 %; ASTM D-6.
      4) Waterstop shall not contain any asbestos fibers or asphaltics.

   b. Physical Properties:

      1) Specific Gravity: 1.57; ASTM D-71.
      2) Application Temperature Range: 5-125 F.
      3) Flash Point: 365; ASTM D 93-97.
      4) Accelerated Aging: Maintained 99% solids.
      5) Dimensions: 1" x 3/4" x 16'-6"

2. Polyvinyl chloride (PVC): Conforming to the requirements of U.S. Army Corps of Engineers Specification CRD-C-572 and of the following type:

   a. Expansion Joints: 9-inches by 3/8-inch, ribbed center bulb.
   b. Construction Joint: 9-inches by 3/8-inch, flat ribbed.
   c. Only where specified on Plans at construction and expansion joints: 9-inches by 3/8-inch, split ribbed.
   d. Install waterstops as shown as manufactured structures.

R. Fiber Reinforcement: Fiber reinforcement shall not be used in the concrete unless ordered buy the Engineer in writing. It shall consist of 100% virgin polypropylene fibrillated fiber-dosage of 2 lbs. per cubic foot.

1. Compressive Strength: 1 psi (.006895 M Pa), ASTM C-39.
2. Flexural Strength: 288 psi (2.0 M Pa) after 7 days, 390 psi (2.7 M Pa) after 28 days; ASTM C-78.
3. Splitting Tensile Strength: 194 psi (1.3 M Pa) after 7 days, and 290 psi (2.0 M Pa) after 28 days; ASTM C-496.
4. Source: Fibermesh Micro-Reinforcement System by Fibermesh Company, Division of Synthetic Industries, Inc. Or approved equal.

S. Provide other materials, not specifically described but required for a complete and proper installation, as selected by the Contractor subject to the approval of the Engineer.

T. A shrinkage reducing admixture (Teraguard) or equivalent at the rate of 2.2% by weight of cement may be used in the concrete to meet the shrinkage limitations.

U. To protect the concrete slab against the elements, the Engineer may direct the Contractor to spray an evaporation retarder on the finished concrete slab immediately behind the cement finishing process at no additional cost to the OWNER. This is not a curing compound.

PART 3 EXECUTION

3.01 SURFACE CONDITIONS

A. Examine the areas and conditions under which work of this Section will be performed. Correct conditions detrimental to timely and proper completion of the Work.

3.02 SUPPLEMENTAL REQUIREMENTS

A. All phases of concrete construction, including materials formwork, and all other related procedures shall comply with the most stringent allowed tolerances of ACI-301 and ACI-117 Standards (Latest Edition) - Non compliance with these standards will cause full rejection of any work done.

B. Comply with ACI 301-96 and with all modifications and supplements thereto listed herein. In addition to the ACI Standards on finished concrete, the Engineer will only approve quality finished concrete which in his opinion is ready to receive a grout finish, paint or liquid membrane.

C. The following modifications and supplements to ACI 301-96 shall also apply to the work.

1. General

   a. These specifications cover cast-in-place structural concrete for use in buildings and appurtenances, including foundations, curbs, sidewalks, concrete pavements and utility structures, water containment tanks, and piles.
   b. Keep minimum two (2) copies of ACI 301-96 "Specifications for Structural Concrete" in field office at all times.

2. Proportioning and Design of Mixes:

   a. General: Proportion concrete to meet properties as specified. Prepare mix designs for each type and strength of concrete. Submit with mix design the chemical admixture manufacturer's statement that the admixture proposed complies with the requirements of this specification. Where concrete of different strengths are specified for the same location, the higher strength concrete shall be used. Concrete proportions shall be established on the basis of previous field experience, or laboratory trial batches as specified in ACI 301-96 Sections 4.2.2 & 4.2.3.

   b. Classes of Concrete:

      1) Structural concrete of normal weight for portions of the structure that are required to be watertight containments or tremie concrete, the water/cementitious ratio shall not exceed 0.45 if exposure is to be to fresh water.
      2) If the concrete is exposed to salt or brackish water, or if exposed to injurious

concentrations of sulfate-containing solutions (1500 ppm or more of Sulfate in water) or other chemically aggressive solutions, use Type II cement with Rheobuild 1000 admixture by Master Builders, or approved equal; water/cementitious ratio shall not exceed 0.34.

3) Other Concrete: (This would be slabs-on-grade, concrete thrust blocks, and miscellaneous concrete). The water cementitious ratio shall not exceed 0.50 to 0.55.
4) Minimum f'c @ 28 days shall be 4000 KSI with a Water/Cement ratio of 0.45.
5) Minimum f'c @ 28 days shall be 7000 KSI with a Water/Cement ratio of 0.34.

c. Slumps:

1) All structural concrete, pumped concrete and tremie concrete shall contain a High Range Water Reducing Admixture and be designed with a maximum water content of 270 pounds per cubic yard. The initial water slump prior to addition of the High Range Water Reducing Admixture shall be 2-inch maximum. Concrete at point of placement shall not exceed 10-inches. Concrete shall be non-segregating.
2) Slabs including slabs-on-grade, and all other concrete shall have a maximum water content of 287 pounds per cubic yard and have a 5-inch maximum slump with a water reducer, or water reducer and retarder admixture added.

3. Formwork

a. Earth cuts are not permitted for forms for vertical surfaces. Footings, grade beams and slab edges shall be formed. Provide moisture barrier under all slabs on grade. Lap 6-inches and tape punctures.
b. The contractor is responsible for the adequacy of forms and shoring including placing, fill and equipment on roof, and for safe practice in their use and removal. Submit formwork calculations, and shop drawings including shoring and reshoring. In addition, the calculations and shop drawings for formwork, shoring, and reshoring, if required by the Engineer or Building Department, shall be signed and sealed by a Professional Engineer registered in the State of Florida.
c. Design forms for the loads and lateral pressures resulting from the placement and vibration of concrete and for design considerations, wind loads, allowable stresses, and other applicable requirements of the South Florida Building Code.
d. Provide form facing materials as required by the specified finish of the formed surface. Do not use facing material with raised grain, torn surfaces, worn edges, patches, dents or other defects. No form may be reused more than three times without the OWNER's approval. The maximum deflection permitted of facing materials reflected in concrete surfaces exposed to view is 1/240 of the span between structural members.

1) Forms shall be free from surface defects, tight to prevent leakage and braced to keep its position and shape when filled with concrete. Adjacent edges and end panels and sections shall be held together to provide accurate alignment and prevent forming ridges, fins, offsets or similar type

defects in finished concrete. It shall be tight to prevent loss of water, cement or fines during placing and vibrating concrete. The bottom of the forms placed in continuous straight even footings or slabs shall be watertight to prevent loss of water, cement and fines during placement and vibration of concrete, a gasket may be required by the Engineer under the forms to provide water tightness at the Contractor expense. The Contractor shall not proceed to place forms for concrete work adjacent to or on top of previous placed concrete without the Engineer's approval, if the stripped forms reveals columns, walls or beams are out of level or plumb or there are cold joints or other objectionable work in the opinion of the Engineer. Contractor shall submit to the Engineer for approval, how he intends to correct or remove the defective work promptly at his expense. Contractor shall perform such corrections prior to proceeding to place concrete in the next Section.

e. Provide positive means of adjustment (wedges or jacks) of shores and struts, and all settlement shall be taken up during concrete placing operation. Brace forms securely against lateral deflection. Do not anchor form bracing to poured concrete floors, or make holes in floor.

f. Provide temporary openings in columns and wall forms to limit the free fall of concrete to five (5) feet. Place such openings at no more than eight (8) feet apart to facilitate placing and consolidation of concrete. Elephant trunks may be used to vertical heights of fifteen (15) feet for tremie and other purposes, if approved by the Engineer. Provide temporary openings at the bottom of wall and column forms and elsewhere as necessary to facilitate cleaning and observation immediately before concrete is placed. Blow formwork entirely clean of all saw dust, dirt, or other items not specifically intended to be a part of the final concrete. Any evidence of non-intended items in the forms is considered sufficient cause to stop concreting operation and/or require removal of concrete placed in such contaminated forms.

g. Provide inserts, conduits, boxes, sleeves, anchors, ties, bolts, hangers, dowels, thimbles, nailers, grounds and other devices in coordination with other trades.

h. Set anchor bolts and other embedded items accurately and hold securely until concrete is placed and set. Anchor bolts shall be galvanized and of size and length as indicated on the Contract Drawings. Bolts not sized shall be 3/4-inch diameter.

i. Insert galvanized dovetail anchor slot in forms, in columns, beams and slabs completely around in-fill masonry panels. Coordinate with Section 04220 Unit Masonry, Part 3 Execution, 3.01.J.2.c. for spacing of dovetails.

j. Install wall spools, wall flanges and wall anchors before placing concrete. Do not weld, tie or otherwise connect the wall spools to the reinforcing steel.

k. Do not use pinch bars, wrecking bars or other metal tools against as-cast concrete to wedge forms loose; use only wooden wedges carefully and gradually. Driving shall be accomplished by light tapping.

l. The Contractor is responsible for the removal of forms and shores. Do not remove forms or shores before the member has attained sufficient strength to support its weight and the loads imposed, nor sooner than listed below:

1) Wall forms: 24 hours.

2) Column forms: 24 hours.
3) Beam and girder side forms only (not bottom form): 24 hours.
4) Beam and Girder bottom forms: 7 days minimum unless otherwise approved by the Engineer.
5) Slab forms: 14 days.
6) Arch centers: 7 days.
7) Pan joist forms: 4 days.

4. Reinforcement

a. Prior to fabrication, submit for review shop drawings showing all fabrication dimensions, bar lists and location for placing of the reinforcing steel and accessories, including spacing of reinforcing, splices (lap, welded, Cadweld and/or mechanically threaded), grade of reinforcing and name of manufacturer. Note all deviations from the Contract Drawings and use the same designation mark as shown on the Contract Drawings where possible.
b. Reinforcing bars: ASTM A615, Grade 60, deformed bars of USA manufacturer.
c. Welded wire fabric: ASTM A185, galvanized.
d. Metal bar supports: CRSI MSP-1, Chapter 3, Class 2, Type B stainless steel protected bar supports.
e. Coupler Splice Devices: Cadweld, tension couplers capable of developing the ultimate strength of the bar.
f. Reinforcing steel upon which unauthorized welding has been done, shall be removed and replaced at no additional cost to the OWNER.
g. Place reinforcing bars to the most stringent tolerances indicated in ACI 301 and ACI 117 (Latest Edition). Tolerances specified in those standards shall govern over any other reference code or standard.
h. All reinforcement at time concrete is placed, shall be free of mud, oil or other materials that may affect or reduce the bond. Reinforcing with rust or mill scale will not be accepted without cleaning and/or brushing to remove scale and rust.
i. Support rebar and mesh reinforcing for slabs on grade 1½ inches from top of slab on masonry blocks not less than 4 sq. in., having a compressive strength equal to or greater than the specified strength of the concrete being placed. Space blocks at no more than 4 feet apart each way for rebars, and no more than 3 feet apart for mesh reinforcement.
j. Support reinforcing off from formwork for columns, walls and beams with stainless steel protected bar supports. Support slab reinforcing on #5 bars, or larger, spaced at no more than 48 inches on center. Space individual high chairs no more than 48 inches apart and support bars shall not exceed 24 inches past outermost chairs.
k. Overlap welded wire fabric in such a manner that the overlap measured between outermost cross wires of each fabric sheet is not less than the spacing of the cross wires plus 2 inches or 6 inches, whichever is greater. Do not extend fabric through expansion and/or contraction joints, unless otherwise noted on the Contract Drawings.
l. The minimum clear distance between parallel bars, both vertical and horizontally, shall not be less than the nominal diameter of the bars, or less than 1½ times the maximum size of the aggregate, or 1-inch in beams, or 1½ inches in columns, whichever is greater. Where reinforcement in beams is placed in two or more layers, the upper layer shall be placed directly above the bars in the bottom layer.

Misplacement, misalignment or improper length of dowels shall be sufficient cause to require removal and reconstruction of affected work.

m. Unless allowed by the Engineer, bending of reinforcing partially embedded in concrete is not permitted. When permitted, bending shall be in accordance with CRSI Manual of Standard Practice.

5. Joints and Embedded Items.

a. Provide premolded expansion joint filler strips of proper width and length as specified in the Contract Drawings. Place ½" expansion joint fillers every 20 feet in straight runs of walkways or sidewalks, at right angle turns and wherever concrete butts into vertical surfaces, unless otherwise noted on the Contract Drawings.

b. Provide waterstops in all construction joints, unless otherwise indicated on the Contract Drawings.

c. Join all waterstops at all intersections so that a continuous seal is provided. Center the waterstop in the joint. Hold water stop positively in correct position. In the event of damage to the waterstop, repair the water stop in an acceptable manner. Vibrate concrete to obtain impervious concrete in the vicinity of all joints.

d. Install waterstop in accordance with instructions of the manufacturer. Prior to use of the waterstop material in the field, submit to the Engineer for approval a sample of each size and shape to be used. Fabricate sample so that the material and workmanship represent in all respects the fittings to be furnished under this Specification.

e. Place all sleeves, inserts, anchors, and other embedded items prior to placing concrete. Anchors and bolts cast in concrete shall be hot dip galvanized or stainless steel. Where permitted by the Engineer, concrete expansion bolts shall be stainless steel and of the wedge anchor type. Take all necessary precautions to prevent embedded items from being displaced, broken or deformed during concreting operation. Protect drains from intrusion of concrete.

6. Placing:

a. Equipment for mixing and transporting concrete must be clean. Forms shall be thoroughly clean and damp, and reinforcing shall be secured in place. Runaways for transporting concrete shall not rest on reinforcing. When concrete is placed against earth, sprinkle sufficiently before placing.

b. Deposit of concrete in forms no longer than ninety (90) minutes after the initial design water has been added to the cement and aggregates. Concrete which can not be so placed shall not be used and shall be wasted. **No additional water shall be added**. No retempering with water is permitted.

c. In addition to the requirements of ASTM C94, the concrete delivery tickets shall indicate the cement content and water/cement ratio.

d. During hot weather, proper attention shall be given to ingredients, production methods, handling, placing, protection and curing. Comply with ACI 305R "Hot Weather Concreting" recommendations.

e. Do not place concrete in forms unless the water level is below the concrete to be placed, even if it is necessary to maintain the dewatering, or under rain.

f. Do not place concrete under water except for tremie concrete as called for on the Contract Drawings. Submit for approval plan and details of means and methods for installation of seal tremie concrete prior to commencement of work. Seal

concrete which subsequently fails to perform, shall be repaired or replaced at no additional cost to the OWNER.

g. Place seal concrete under water in the space in which it is to remain, by means of a tremie, a closed-bottom dump bucket of not less than one cubic yard capacity, or other approved method, and do not disturb after it is deposited. Deposit all seal concrete in one continuous pour. Do not place concrete in running water. Design all formwork, to retain concrete under water, to be watertight. Submit shop drawings for the design of formwork and excavation sheeting signed and sealed by a Florida Registered Professional Engineer.

h. The tremie shall consist of a tube having a minimum inside diameter of ten (10) inches, and shall be constructed of sections having tight joints. No aluminum parts which have contact with the concrete will be permitted. The discharge end shall be entirely seated at all times and the tremie tube kept full to the bottom of the hopper. When a batch is dumped into the hopper, the tremie shall be slightly raised (but not out of the concrete at the bottom) until the batch discharges to the bottom of the hopper, after which the flow shall be stopped by lowering the tremie. The means of supporting the tremie shall be such as to permit the free movement of the discharge end over the entire top surface of the work, and shall permit it being lowered rapidly when necessary to choke off or retard the flow. The flow shall preferably be continuous and in no case shall be interrupted until the work is completed. Exercise special care to maintain still water at the point of deposit.

i. When the concrete is placed by means of a bottom dump bucket, the bucket shall be lowered gradually and carefully until it rests upon the concrete already placed. The bucket shall then be raised very slowly during the discharge travel; the intent being to maintain, as nearly as possible, still water at the point of discharge and to avoid agitating the mixture. Aluminum buckets will not be permitted.

j. Do not commence pumping, to dewater a sealed cofferdam, until the seal has set sufficiently to withstand the hydrostatic pressure, and in no case earlier than 72 hours after placement of concrete.

k. Notify Engineer a minimum of 24 hours prior to concreting and request a specific time for observation of reinforcing and formwork for portions of concrete work to be placed. No observation will made by the Engineer until rebar installation for all work to be done and all formwork has been completed and approved by the Contractor's field superintendent. Do not order concrete until all correction and additions indicated by the Engineer have been made. Should the Engineer's observation reveal that work is improperly prepared and an additional observation will be required, he will so inform the Contractor and all above requirements shall also govern.

7. Repair of Surface Defects:

a. Repair all concrete surface defects, which includes, but not limited to cracks, tie holes (no plastic cones), uneven holes, honey combs, rough frame work and other objectionable conditions deemed unacceptable to the Engineer immediately after form removal. This repair work is to be done for all concrete expose surfaces, liquid applied surface or painted surfaces in or out of the water. Repair all cracks and defects in the concrete floors, beams, joists, columns, and other structural members, roof and walls, to the satisfaction of the Engineer, that may occur up to one year after acceptance of work regardless of the cause. Test unformed, surfaces such as monolithic slabs, for smoothness and verify placement

tolerances specified for each surface and finish. Test unformed surfaces sloped to drain for trueness of slope, in addition to smoothness. Repair unformed surfaces that contain surface defects which affect durability of concrete. Surface defects, as such, include cracking, cracks which penetrate to reinforcement or completely through non-reinforced sections regardless of width, spalling, pop-outs, honeycomb, rock pockets and other objectionable and rough conditions.

b. Proprietary compounds for adhesion or as patching ingredients may be used, if approved by the Engineer. All structural repair of surface defects to be made require the approval of the Engineer, as to the method and procedure. Approval of the completed work must be obtained from the Engineer.

8. Finishing of Formed Surfaces.

a. Apply rough form finish to exterior walls below grade not exposed to water.
b. Apply smooth form finish to exterior and interior walls and columns exposed to water.
c. Apply smooth form finish to interior walls and underside of floors, stairs and slabs.
d. In addition to the smooth form finish, apply a grout cleaned finish to concrete walls and surfaces exposed to public view and underside of formed floors, stairs or slabs.
e. Apply a rubber float grout mix to properly prepared concrete surface, only when approved by the Engineer. Mix shall have one part Portland cement to two parts fine sand in a 50% water and 50% Acryl #60 (Thoroseal or Acryl Set) mix or Acryl Set by Master Builders. Make a 10' by 10' sample on the concrete wall for the approval of the Engineer. Finished surface shall be a non dusting hard finish, when scratched with a ¼" metal edge.

f. Finish concrete surface, interior or exterior, below or above water shall include all:

1) Exposed concrete.
2) Grout finished concrete.
3) Painted surface concrete.
4) Liquid membrane finished concrete shall comply with manufacturer's requirements.
5) The entire surface of finished concrete shall have a smooth uniform surface, there shall be no offsets, visually bulges, or wavering in the finished surfaces. The joints must be accurately aligned, they can not be uneven or in or out, a higher and lower, there shall be no fins, projection or unevenness between forms.
6) If after stripping the forms the Engineer determines that the finished concrete does not comply with any or all of the above requirements, the Contractor shall submit his proposal in writing to the Engineer as to his methods of correcting the work at no added cost to the OWNER, which shall include, but not limited to all grinding of fins, projections, unevenness between joints, form high spots and uneven spots.
7) In addition to all other requirements, concrete surfaces exposed to public view, irrespective of size, area or location shall be completely clean and free of: (1) Stains of any nature, (2) Parts of forms or other wood of any nature, (3) laitance, (4) "Run-downs" of leaked water from secondary pours, (5) Nails, (6) Strips, (7) Ties and (8) all other extraneous, deleterious materials

and/or substances which may affect the finished appearance and condition of exposed concrete. Surfaces not meeting the above requirements are to be repaired and treated at no additional cost to the OWNER.

9. Slabs

   a. Unless otherwise noted on the Contract Drawings, place strips alternately at maximum 20 feet center-to-center and to align with column centerline. Do not place adjacent strips until elapse of twenty four hours after first strip is placed. Place slabs on grade by the "strip-cast" method. Method to be reviewed by the Engineer. Provide saw-cut joints at maximum 20 feet center-to-center and to align with column center lines within four hours of final finishing.

   b. Provide doweled construction joints where shown on the Contract Drawings.
   c. Provide a hard steel troweled finish, free from trowel marks and irregularities, to slabs and floors.
   d. Provide a light hair-broom finish to exterior slabs and floors exposed to public view. Leave hair-broom lines parallel to direction of the slab drainage.
   e. Provide a stiff bristle broom finish to slabs and floors with slopes greater than 10 percent. Leave broom lines parallel to slope drainage.
   f. Finish exposed edges of slabs, floors and tops of walls with a ¼-inch radius edge unless a chamfer is called for on the Contract Drawings.

10. Curing and Protection

   a. Comply with ACI 305 "Hot Weather Concreting", Chapter 4, with the supplements and modifications to ACI 301 listed herein.
   b. Only concrete water curing for not less than 7 days (24 hours/day continuously) will not be accepted; Burleen mats shall be used in curing. Water cure by ponding or continuous sprinkling covering complete surface with minimum runoff. The application of water to wall may be interrupted for grout cleaning only over the areas being cleaned at the time, and the concrete surfaces shall not be permitted to become dry during such interruption.
   c. Begin all water curing as soon as concrete is set and concrete will not be damaged. Keep concrete and wall forms wet the first 24 hours. Remove forms as indicated in Formwork, Section 3.02-C.4, and continue with 7 day water curing. Recoat damaged surfaces subject to heavy or surfaces damaged by construction procedures within 3 hours of damage. Method of repair shall be approved by the Engineer.

11. Testing

   a. Testing laboratory will be selected and paid for by the Contractor. Send results of all test to the OWNER and to the Contractor. The Contractor shall notify the Testing laboratory at least 24 hours before each concrete placing.
   b. Obtain and mold 3 specimens for each fifty (50) cu. yds., or fraction thereof, of each class of concrete placed each day or as directed by the Engineer.
   c. Cure specimens from each sample in accordance with ASTM C31. Record in test report any deviations from this Standard.
   d. Test specimens in accordance with ASTM C39. Test one specimen at twenty

eight (28) days for acceptance and, one specimen at three (3) days and seven (7) days respectively, for information. If one specimen in a test manifests evidence of improper sampling, molding or testing, it shall be discarded and the strength of the remaining cylinders shall be considered the test result.

e. Contractors Superintendent shall color code on a set of structural drawings the extent of days work and date to conform to cylinders test.

f. Perform slump test at discharge of mixer, one for each strength test in accordance with ASTM C143. In the event slump is excessive, testing laboratory will immediately notify the Contractor's superintendent and the Engineer's representative on site. The Contractor shall then reject all concrete with excessive slump and/or deposit time.

g. Drying Shrinkage Test: A drying shrinkage test shall be conducted on the preliminary trial batch with the maximum water-cementitious materials ratio used to qualify each proposed concrete mix design using the concrete materials, including admixtures, that are proposed for the project. Three test specimens shall be prepared for each test. Drying shrinkage specimens shall be 4 x 4 x 11 inch prisms with an effective gauge length of 10 inches fabricated, cured, dried, and measured in accordance with ASTM C 157 except with the following modifications:

1) Specimens shall be removed from the molds at an age of 23 hours ± 1 hour after trial batching, shall be placed immediately in water at 73° F ± 3°F for at least 30 minutes, and shall be measured within 30 minutes thereafter to determine original length and then submerged in lime-saturated water as specified in ASTM C157. Measurement to determine expansion expressed as a percentage of original length shall be taken at age 7 days. The length at 7 days shall be the base length for drying shrinkage calculations (“0" days drying age). Specimens then shall be stored immediately in a humidity controlled room maintained at 73° F ± 3°F and 50% ± 4% relative humidity for the remainder of the test. Measurements to determine shrinkage expressed as percentage of base length shall be reported separately for 7, 14, and 21 days ±4 hours of drying from “0" day after 7 days of moist curing.

2) Drying shrinkage deformation for each specimen shall be computed as the difference between the base length (at “0" days drying age) and the length after drying at each test age. Results of the shrinkage test shall be reported to the nearest 0.001 percent. If drying shrinkage of any specimen deviates from the average for that test age more than 0.004 percent, the results for that specimen shall be disregarded.

3) The average drying shrinkage of each set of test specimens cast in the laboratory from a trial batch as measured at the 21 days drying age shall not exceed 0.036 percent and 0.042 percent at the 28-day drying stage for all concrete.

a) The maximum concrete shrinkage for specimens cast in the field shall not exceed the trial batch maximum shrinkage requirement by more than 25 percent.

b) If the required shrinkage limitation is not met during construction, the Contractor shall take any or all of the following actions at no additional cost to the OWNER, for securing the specified shrinkage requirements. These actions may include changing the source or aggregates, cement

and/or admixtures, including Tetra Guard AS 20 or approved equal; reducing water content; washing of aggregate to reduce fines; increasing the number of construction joints; modifying the curing requirements; or other actions designed to minimize shrinkage or the effects of shrinkage.

4) Alkali-aggregate reactivity potential shall be determined in accordance with Appendix XI of ASTM C 33. Aggregates shall be tested in accordance with ASTM C 289 and C295 to determine potential reactivity. Aggregates which do not indicate a potential for alkali reactivity or reactive constituents may be used without further testing. Aggregates which indicate a potential for alkali reactivity shall be further tested in accordance with ASTM C227 or C1105, as appropriate, using a cement containing less than 0.6 percent alkalies. At the discretion of the Engineer, testing in addition to that indicated in Appendix XI of ASTM C33 may be performed on potentially reactive aggregates. Nonreactive aggregates shall be imported if, in the opinion of the Engineer, local aggregates exhibit unacceptable potential reactivity.

12. Evaluation And Acceptance of Concrete.

a. If tests are insufficient or inadequate, test and evaluate by core tests. Failure of any concrete cylinder to meet specified requirements shall be deemed as non-complying and costs of additional tests to determine the adequacy or inadequacy shall be borne by the Contractor. Concrete rejected for any reason is to be removed and replaced, including labor, forms and reinforcing, to meet specifications at no additional cost to the OWNER and no additional time extension.

13. Additional Requirements.

a. Submit shop drawings as required per General Conditions and elsewhere in these specifications. Prime Contractor shall check and approve all shopdrawings prior to submission. Do not fabricate any item requiring shopdrawings until approval of shopdrawings has been granted by the OWNER. Partial shopdrawings are not accepted, submit drawings for complete submittal.
b. Provide precast or cast-in-place reinforced concrete lintels at all masonry openings and sills at all windows. Reinforce to suit loads and span. Provide minimum 8" bearing at each end and, pour integral with columns where opening abuts columns.
c. Sidewalks in R.O.W.: Provide poured-in-place 4" thick concrete slab, 3000 psi concrete, with continuous 8" deep thickened slab edges. Isolate walks from vertical surfaces with ½" expansion joint material. Provide ½" expansion bituminous joint material flush with top of concrete slabs at 20 feet on center and tooled joints at 5 feet on center. Tool all open edges to a smooth radius and all edges adjacent to the forms.

END OF SECTION

THIS PAGE LEFT INTENTIONALLY BLANK

SECTION 03375

FLOWABLE FILL

PART 1 - GENERAL

1.01 SCOPE OF WORK

A. This Section specifies the requirements for flowable fill used for trenches, support for pipe structures, culverts, utility cuts and other works where cavities exist and where firm support is needed for pavements and structural elements. Flowable fill may also be used to fill water and sewer lines, and fuel tanks placed out of service, and at other locations approved by the Engineer of Record.

PART 2 - PRODUCTS

2.01 MATERIALS

The materials used shall conform with the requirements specified in Division III of the F.D.O.T. Standard Specifications for Road and Bridge Construction, latest edition, and herein. Specific references are as follows:

A. Portland Cement (Types I, II or III) .....Section 921.

B. Fly Ash, Slag and other Pozzolanic Materials
for Portland Cement Concrete .....Section 929.

C. Fine Aggregate (Sand)* .....Section 902.

D. Water .....Section 923.

*Any clean sand with 100% passing 3/8" sieve and not more than 10% passing with 200 mesh may be used.

2.02 MIX PROPORTIONS

A. The Contractor shall be responsible for producing a flowable mixture using these guidelines and by adjusting his mixture design as called for by circumstances or as may be directed by the Engineer of Record.

B. Excavatable flowable fill material shall be proportioned to produce a 28-day compressive strength of 100 psi.

C. General mix quantities are as follows:

Components	Pounds per Cubic Yard
Cement	50-100*
Fly Ash or Granulated Blast Furnace Slag	0-600
Fine Sand	2,750 (adjust to yield one cubic yard of flowable fill)
Water	500 (Maximum)

* The percentage of cement may be increased above these limits only when early strength is required and future removal is unlikely.

D. Weights for fine aggregate and water shall be adjusted according to cementious content. The mix proportions shall be adjusted for removability, pumpability and flowability. If required, strength test data shall be provided prior to batching.

E. If required by the Engineer of Record, the flowability can be measured by afflux time determined in accordance with ASTM C 939 and shall be 30 seconds ± 5 seconds as measured on mortar passing the No. 4 sieve. The equipment required to perform this test shall be provided by the Contractor.

2.03 APPROVED MIXES OF "EXCAVATABLE FLOWABLE FILL"

FDOT - Approved Design Mixes for Dade County

Plant	Mix Number
Tarmac	04-FF-65
Rinker Materials Corp.	04-FF-52
Central Concrete Supermix Inc.	06-FF-41
Cemex	06-FF-48

PART 3 - EXECUTION

3.01 PRODUCTION AND PLACING

Flowable fill shall be produced and delivered using concrete construction equipment. Placing flowable fill shall be done by chute, pumping or other methods approved by the Engineer of Record.

3.02 CONSTRUCTION REQUIREMENTS

The flowable fill shall be placed to the designated fill line without vibration or other means of compaction. Placement shall be avoided during inclement weather, e.g. rain or ambient temperatures below 40 degrees F. The Contractor shall take all necessary precautions to prevent any damages caused by the hydraulic pressure of the fill during placement prior to hardening. Also, necessary means to confine the material within the designated space shall be provided by the Contractor.

3.03 ACCEPTANCE

A. The flowable fill shall be proportioned and placed as specified herein. In general, the strength desired is the maximum hardness that can be excavated at a later dated using conventional excavating equipment. No curing protection is required.

B. The fill shall be left undisturbed until material obtains sufficient strength. Sufficient strength is 250 psi penetration resistance as measured using a hand held penetrometer. The penetrometer shall be provided by the Contractor.

C. All flowable fill areas subject to traffic loads must have a durable riding surface.

D. An approved type of accelerator may be approved for the placement of "Flowable Fill" in traffic areas when submitted to the OWNER for D.O.T. approval.

END OF SECTION

THIS PAGE LEFT INTENTIONALLY BLANK

SECTION 03600

GROUT

PART 1 GENERAL

1.01 WORK INCLUDED

A. The work included in this Section consists of grouting the various items listed hereinafter and indicated on the Drawings.

1.02 RELATED WORK

A. Section 03300 Cast-In-Place Concrete

1.03 SUBMITTALS

A. Manufacturer's literature shall be submitted for review on the following items.

1. Nonshrink grout data shall include grout properties, mixing, surface preparation and installation instructions.

1.04 DELIVERY AND STORAGE

A. Grouting materials shall be delivered and stored in unbroken containers with seals and labels intact as packaged by the manufacturer.

1.05 QUALITY ASSURANCE

A. If the project includes patching, throughbolt holes, epoxy anchors, and/or blockouts, the manufacturer shall, if necessary, train the CONTRACTOR's employees in the mixing and curing of the epoxy grouts for each of these applications.

B. Furnish one year warranty. Manufacturer's warranty shall not contain a disclaimer limiting responsibility to the purchase price of products or materials.

PART 2 PRODUCTS

2.01 MATERIALS

A. Class I Non-Shrink Grout (5000 psi) shall be Masterflow 713 Plus by BASF, Five Star Grout by Five Star Products, Sikagrout 212 by Sika Corporation, Premier by L&M Construction Chemicals; High-Flow Grout by Euclid Chemical Company, CG 200 PC by Hilti, or approved equal.

B. Class II Non-Shrink Grout (7500 psi) shall be Masterflow 928 by BASF, Five Star Fluid Grout 100 by Five Star Products, Crystex by L&M Construction Chemicals, or approved equal.

C. Nonshrink Metallic Grout: Master Builders Embeco 636 Grout pre-mixed type,

or equal.

D. Epoxy Grout: DP Five Star epoxy grout by U.S. Grout Corp., or equal.

2.02 BASE FOR VIBRATING PUMPS AND MACHINERY

A. The OWNER requires an expansive, non-shrink epoxy grout to service as a base for pump bases and other machinery. The slab shall be constructed with an epoxy grout that can absorb vibration and provide support for precision machinery. Pump bases shall be constructed to the dimensions and thickness required by the pump or machinery manufacturer for the application.

B. Pump bases over 100 horsepower shall be constructed with DP Five Star Epoxy Grout. Approved equals to the Five Star Epoxy Grout product shall be considered only a detailed analysis for vibration and harmonic interference are provided for the application.

2.03 EPOXY ANCHOR GROUT

A. Epoxy anchor grout shall conform to ASTM C 881 - Epoxy-Resin-Base Bonding Systems for Concrete, Type IV, Class A, B and C, Grade 3 with the exception of gel time.

B. Heat deflection temperature per ASTM D 648 -- Test Method for Deflection Temperature of Plastics Under Flexural Load shall be a minimum 120 degrees.

C. Manufacturer shall certify that the epoxy anchor grout will maintain 90 percent of its strength up to a temperature of 125 degrees F.

D. Grout shall come in a 2 chambered cartridge with a metering system that provides the proper ratio of hardener and resin. The grout shall also come with a static mixer nozzle to thoroughly mix the hardener and resin together.

E. Epoxy anchor grout shall be capable of being used in submersed applications once cured.

F. Compressive strength per ASTM D 695 - Test Method for Compressive Properties of Rigid Plastics shall be 10,000 psi minimum.

G. If the average working or operating temperature will be over 100 degrees F or in a high fire risk area, use cement based non-shrink grout and oversized holes.

H. Overhead anchors and anchors in fire-resistive construction shall be cast-in anchors.

I. Embedment of adhesive anchors/rebar shall be deep enough to develop the anchor/rebar. Embedment shall not exceed 67 percent of the member depth.

J. Epoxy anchor grout shall be SET-XP by Simpson Strong-Tie Co., Inc.; Powers PE1000+ by Powers Fasteners, Inc.; RE 500 SD by Hilti, Inc.; or approved equal.

PART 3 EXECUTION

3.01 PREPARATION

A. All bonding surfaces shall be clean and dust and oil free. Grout shall be mixed and applied in accordance with manufacturer's recommendations.

B. Grout Mix proportions (for grout to fill cores in reinforced masonry walls):

1. One part Portland cement, Type I or II.
2. 2-1/4 parts damp, loose sand.
3. Parts shot gravel (3/8" maximum).
4. Mix to conform to ASTM C476-83 with a minimum compressive strength of 2500 psi at 28 days, have an 8" minimum and 10" maximum slump.

C. Grout shall not be placed until base concrete or masonry has attained its design strength, unless authorized otherwise by the ENGINEER. Surfaces that will be in contact with grout shall be free of dirt, loose rust, oil, wax, grease, curing compounds, laitance, loose concrete, and other deleterious materials.

D. Mechanical, electrical, and finish WORK shall be completed prior to placement of topping or concrete/grout fill. To ensure bonding to the base slab, the base slab shall be given an exposed aggregate finish. Alternatively where accepted by the ENGINEER, the base slab shall be given a roughened textured surface by a close-spaced rake while the surface is green. After curing, high pressure washing shall expose the aggregates and produce not less than a 3/16-inch amplitude roughness. Jackhammers or chipping hammers shall not be used.

3.02 INSTALLATION

A. Nonshrink Grout:

1. Nonshrink, nonmetallic grout shall be used for grouting precast concrete wall panel connections, column base plates, anchor bolts, reinforcing bars, pipe sleeves, and machinery supports.
2. Grout shall be mixed as close to the work area as possible and transported quickly to its final position in a manner which will not permit segregation of materials.
3. Nonshrink grout shall be cured with water saturated burlap for at least three days or with an application of Super Rez Seal cure and seal compound applied immediately after grout placement.
4. Machinery set on grout pads shall not be operated until the grout has cured for at least 24 hours.
5. Expansive, non-shrink epoxy grout in the category of the DP Five Star Epoxy Grout shall be used for installation of vibrating machinery such as pumps.

B. Epoxy Adhesive Anchors: Grout shall be proportioned and mixed with automatic equipment. Unless otherwise indicated, embedment shall be sufficient to

develop the ultimate tensile strength of the anchor or reinforcing bar per the manufacturer's ICC-ES report, but shall not be less than 8 diameters for threaded rod or 12 diameters for reinforcing or smooth bars. Holes shall be dry.

C. Drilled anchors and reinforcing bars shall be installed in strict accordance with the manufacturer's instructions. Holes shall be roughened with a brush on a power drill, and cleaned. Drilled anchors shall not be installed until the concrete has reached the required 28 Day compressive strength. Anchors shall not be loaded until the grout has reached its indicated strength in accordance with the manufacturer's instructions.

END OF SECTION

SECTION 05550

CASTINGS

PART 1 - GENERAL

1.01 SCOPE OF WORK:

This section specifies castings for use in this project, including manhole frames and covers, and both water and sewer valve boxes and covers. It also establishes casting requirements, including tolerances, on all castings to be furnished and installed under this project.

1.02 RELATED SECTIONS:

A. Section 02536 - Precast Manholes & Covers

1.03 REFERENCES:

Unless otherwise indicated, all materials, workmanship and practices shall be in accordance with the current edition of the ASTM A48, "Gray Iron Castings", Class 35B.

Proof Loading: AASHTO M306 Loading

1.04 QUALIFICATIONS:

Manufacturer: Company specializing in manufacturing of products specified in this section with minimum five years documented experience. Non-domestic castings shall conform with all marking and other requirements contained in federal and state statutes.

PART 2 - PRODUCTS

2.01 GENERAL

A. Shop drawings shall be furnished for all castings supplied and said drawings shall include certified dimensions and weights of all components. Dimensions shall conform with MDWASD Standard Detail requirements.

B. Finish casting dimensions shall be held to the following tolerances: Up to 4 inches, ±1/32 inch; 4 to 8 inches, ±3/64 inch; 8 to 12 inches, ±1/16 inch; 12 to 24 inches ±1/8 inch; above 24 inches, add the appropriate (minimum) value from those given above to ±1/8 inch. Note that this shall not affect the requirement that mating surfaces shall be machined and shall bear for their full length. Components shall be interchangeable with new and existing units without exceeding the tolerance add up specified above.

C. Weight of castings supplied shall not vary more than ±5 percent from the certified weight supplied by the Contractor as a part of his shop drawings.

D. The foundry's name (and if not domestically produced, foundry's name and country) shall be cast in the bottom of each lid. Body and lid or frame and cover shall be manufactured by the

same foundry. Manufacture of the various components comprising one set, such as for example; a valve box and lid, by different manufacturers is expressly forbidden.

E. Note that name cast into the bottom of the lid shall be the name of the actual foundry doing the casting. Name of an importing, purchasing or fabricating (from components) firm will not be acceptable. Methods of attaching this information other than casting are not acceptable.

F. With the shop drawings of each component, submit the name, address and county of the foundry producing the component. Further, this foundry shall not be changed during the course of the Contract without written previous notification of and written permission from the Engineer and OWNER.

G. Each shipment of castings provided by the Contractor shall be accompanied by a certification specifically stating that the materials of that shipment comply with all requirements of this Specification, specifically including dimensions and tolerances, materials of manufacture, weights of components, marking and foundry of origin. This certification shall be signed, dated and sealed by a registered professional engineer licensed to practice in state where the materials are cast or if not of domestic manufacture in the state where the supplying firm is located. One original of this certification shall be shipped with the materials and one original shall be sent to OWNER. Shipments sent without the certification as required above may not be accepted.

H. Contractor's should be aware that it is the intent of the OWNER to periodically check materials supplied for conformance to these specifications to include materials testing, dimensions and tolerances, component weights, marking, finish and fit, and such other matters as are necessary to assure supply of products meeting our requirements. Random testing of materials supplied will be at OWNER expense if passed. Any retesting due to material not passing tests will be at the supplier's expense.

2.02 CASTINGS AND MATERIAL, GENERAL

A. General materials used in the manufacture of the castings shall conform to ASTM Standard A48, "Gray Iron Castings", latest edition, for Class 35B iron. Manhole and valve box covers shall have a roadway type surface, machined mating surface and shall be non-rocking.

B. Castings shall be furnished unpainted with shotblasted finish.

C. Castings shall be as manufactured by U.S.F. Fabrication, Inc., Neenah Foundry, or approved equal.

2.03 MANHOLE FRAMES AND COVERS

Manhole frames and covers shall be MDWASD Type "A" with roadway cover, U.S.F.F. No. 310 or approved equal. (See Miami Dade Water and Sewer Department's Standard Detail SS 4.0) The covers shall be cast labeled "Sanitary Sewer".

2.04 VALVE BOXES AND COVERS - SEWER

Valve boxes and covers for sewer applications shall be MDWASD No. 53, in accordance with the Standard Details. Valve box covers shall be cast labeled with the letter "S"

2.05 VALVE BOXES AND COVERS - WATER

Valve boxes and covers for water applications shall be MDWASD Nos. 2 and 3, in accordance with the Standard Details. Valve box covers shall be cast labeled with the letter "W"

PART 3 - EXECUTION

3.01 GENERAL INSTALLATION

A. Castings with cracks or other defects, shall not be installed in the work.

B. The use of sloped asphaltic concrete ramp rings will not be permitted.

C. The Contractor shall provide all barricades, signs and flashing warning lights necessary to warn pedestrians and motorists of the construction along the entire route of the project.

D. Frames and covers or valve boxes and covers shall be set accurately to grade to conform to the finished grade of the adjacent areas.

E. Castings level without tipping, to correct elevations.

F. Manhole frames and covers shall be with a minimum of 3 and a maximum of 5 courses of brick provided as a leveling course.

G. It shall be the Contractor's responsibility to assure that castings are set to match existing and/or proposed finish paving grades.

END OF SECTION

THIS PAGE LEFT INTENTIONALLY BLANK

SECTION 15060

PIPING AND FITTINGS

PART 1 - GENERAL

1.01 SCOPE:

A. This section describes materials, testing, and installation of ductile-iron pipe and fittings for water and sewer mains, small diameter Poly Vinyl Chloride Pipe (PVC) with threaded, flanged and solvent cemented joints; Copper Pipe and Fittings, and High Density Polyethylene Pipe for water services. The work included in this section consists of furnishing all material, equipment, craft labor and performing all operations necessary for the supply, installation, and commissioning of all piping, fittings and accessories within the limits of work, as shown on the drawings and specified herein.

B. Where references are made to other standards or codes, unless specific date references are indicated the latest edition of said standard or code shall govern.

1.02 WORK NOT INCLUDED UNDER THIS SECTION:

Piping installation for various types of piping systems is specified other sections herein that constitute MDWASD's Design Standards and Construction Details. Installations specified in this section are supplementary to those sections and in the case of conflict the more stringent condition shall prevail. For type PSM SDR-35, 26 PVC and AWWA C900 PVC sewer pipe and fittings see Section UC-250, "Gravity Sewer Systems".

1.03 RELATED SECTIONS:

A. Section 15010 - Basic Mechanical Requirements

B. Section 15065 - Miscellaneous Materials

C. Section 15070 - Jacking and Boring

D. Section 15075 - Aerial Crossings

E. Section UC-250 - Gravity Sewer Systems

F. All sections specifying various types of valves.

1.04 PIPING LAYOUT AND DESIGN CRITERIA:

A. Field verify dimensions prior to preparation of layout and shop drawings. Obtain the following information from the drawings and specifications:

1. Elevation of the pipe centerline and of the completed ground.
2. Alignment of the pipeline.
3. Field test hydraulic gradient elevation (HGL).
4. Nominal internal diameter, ID.
5. Design internal pressure class or HGL
6. Joint types.

B. Obtain shop drawing approval prior to fabrication of piping. All items not specifically mentioned in the Specifications or noted on the approved Plans, but which are reasonably necessary to for a complete, functional, and satisfactory installation shall be included.

1.05 SUBMITTALS

A. Submit shop drawings in accordance with the General Provisions.

B. Provide an affidavit of compliance with standards referenced in this specification, e.g., AWWA C151, AWWA C153, etc.

C. Submit copy of report of pressure tests for qualifying the designs of all sizes and types of pipe and fittings that are being used in the project. The pressure test shall demonstrate that the minimum safety factor described in relevant standard is met.

D. Submit piping layout profile drawings showing location and dimensions of pipe and fittings; submit after equipment and valve submittals have been reviewed and marked **"Resubmittal not required."** Include laying lengths of valves, meters, in-line pumps, and other equipment determining piping dimensions. Label or number each fitting or piece of pipe. Piping having identical design pressure class, laying lengths, and bell-and-spigot dimensions that is to be placed in long straight reaches of alignment may have the same identifying label or number.

E. Provide the following information:

1. Mortar lining thickness.

2. Wall thickness.

3. Material test data for this project.

4. Show deflections at push-on and mechanical joints.

5. Submit joint and fitting details and manufacturer’s data sheets.

F. Fully detailed drawings of all fittings proposed shall be supplied by the manufacturer with his bid. The tabulated nominal weight of each size and type of fitting shall also be supplied by the manufacturer for all items proposed. This weight shall be that of the bare casting prior to application of any lining or coating.

G. Submit calculations and test data proving that the proposed restrained joint arrangement for restrained joint pipe can transmit the required forces with a minimum safety factor of 1.5.

H. Submit copy of manufacturer's quality control check of pipe material and production. Include hydrostatic test records and acceptance test records. For each acceptance test, submit a stress-strain diagram showing yield strength, yield point, tensile strength, elongation, and reduction in area. Provide specimen test section dimensions and speed and method used to determine speed of testing, method used for rounding of test results, and reasons for replacement specimens, if any. Submit ring-bending test of pipe of the same diameter and pressure class as the pipe required for this project to prove ring-bending stress at 48 ksi results in a factor of safety of 2.0.

I. For Ductile Iron Pipe and fittings, submit certificate that cement for mortar lining complies with ASTM C150, designating type.

J. Submit test report on physical properties of rubber compound used in the gaskets.

K. Submit test reports and certifications for ceramic epoxy lining as specified herein. Submit applicators qualifications. Submit manufacturer’s written recommendations for application and repair of coating.

L. Submit drawing or manufacturer's data sheet showing flange facing, including design of facing serrations.

M. Submit weld procedure specification, procedure qualification record, and welder's qualifications prior to any welding to ductile-iron pipe or fittings.

1.06 DELIVERY, STORAGE, AND HANDLING

A. During shipping, delivery and installation of pipe and accessories, handle in a manner that is incompliance with the manufacturer’s recommendations, and employ procedures that ensure delivery of an undamaged operable product

B. Exercise particular care not to damage coatings by limiting exposure or physical contact with other materials, objects, or the environment.

1.07 INSPECTION

The Owner's Representative will inspect materials, production, and testing of pipes, fittings, and special pieces at manufacturer's plant.

1.08 QUALITY ASSURANCE

All pipe, fittings and other materials supplied under this contract shall be subject to inspection while still on the delivery truck. It is the sole responsibility of the vendor and supplier to make prior contact with the Storekeeper or the Construction Management section and provide a minimum of 48-hours prior notice of delivery. When so notified, the OWNER will make arrangements for inspection of the material upon arrival or within a reasonable time thereafter. Material shall not be unloaded without inspections taking place either prior to or, if necessary for examination, during the unloading procedure. The OWNER will not be responsible for any delays or additional costs created by non- compliance with the requirement for prior notification or the requirement for thorough inspection.

Materials shall be delivered in complete compliance with the AWWA Standards as modified herein, without damage, and shall match or exceed the quality of any samples supplied. The OWNER absolutely reserves the right to require samples of any material supplied and to perform whatever tests considered by the Engineer, whose decision shall be final, to be in the OWNER’s best interest on said samples. Where such tests are of a destructive nature, the sample, if it passes the test will be paid for (at cost as shown by invoice) by the OWNER. Samples failing will be immediately replaced with suitable material at the supplier’s/contractor’s expense. Samples required prior to order as a condition for purchase or as a materials submittal for approval will be at the supplier’s/contractor’s expense but, if approved and not used for destructive tests, may be used in the work with permission from the Engineer.

Materials found to be defective, not in strict compliance with the quality standards of samples

supplied or these specifications shall be immediately returned to the vendor at his expense. If defects are discovered at a later time, the vendor shall be required to remove said items and shall bear all costs for so doing together with any replacement costs. Rejection of items may subject the vendor to liquidated and/or actual damages as specified elsewhere herein.

Foundries supplying materials shall maintain their metallurgical records for a minimum period of two years after fabrication and firms not doing so may be found in default.

Flaws which provide cause for rejection include;

1. Incorrect metallurgy or metallurgy which cannot be verified to the complete satisfaction of the Engineer;

2. Foundry identification/location, size, pressure and material identification information lost, removed, non-existent, or not visible when assembled;

3. Not in complete compliance with all applicable AWWA Standards as modified herein and/or these specifications;

4. Not in compliance with NSF;

5. Not in compliance with approved shop drawings;

6. Out of roundness in excess of AWWA requirements;

7. Dimensional differences in excess of AWWA requirements;

8. Rough exterior coating;

9. Chipped, cracked, scratched or otherwise damaged interior or exterior coatings or linings;

10. Interior or exterior coatings which are too thin;

11. Coatings too thick to allow proper assembly; coatings too thick to allow proper grip by restraining gaskets or other restraining elements;

12. Pin holes or honey combing of pipe;

13. Weld spatter or excess metal in gasket grooves or the whole of the bell area;

14. Bell areas which are distorted or otherwise improperly cast;

15. Spigots which are out of round, not of proper dimension, or not beveled to an extent that will allow easy assembly of the pipe joint;

16. Gaskets which are defective or of the wrong material;

17. Lack of joint materials;

18. Improper or defective joint materials;

19. Bolting of the wrong material or size;

20. Electro galvanizing or other exterior plating when hot-dip galvanizing is required;

21. Incorrect, flawed or damaged interior coating or lining;

22. Lack or non-submittal of all required certifications;

23. Non-timely submission of certifications; incorrect/incomplete certifications or certifications lacking the signature, date and seal of a professional engineer when so required;

24. Flanges which are too thin, not a right angles to the pipe centerline, or otherwise distorted;

25. The above listed items together with all other flaws or defects which in the opinion of the Engineer, whose decision shall be final, adversely affect the assembly and/or function of the piping system as intended.

PART 2 - PRODUCTS

2.01 PIPE AND FITTINGS: DUCTILE IRON

A. GENERAL

As used herein, "ANSI" denotes the American National Standards Institute, "AWWA" denotes the American Water Works Association, and "ASTM" denotes the American Society for Testing and Materials.

All pipe and fittings to be furnished hereunder shall conform to the referenced ANSI and/or AWWA Standard as modified herein, as appearing in the following sections.

All markings required on pipe and fittings, shall be permanent and clearly legible and located such that they will not be hidden or destroyed when assembled into the intended system. Plainly mark each length of straight pipe and each fitting at the bell end to identify the design pressure class, the wall thickness, and the date of manufacture, and the proper location of the pipe item by reference to the layout schedule. Mark the spigot end of restrained joint pipe to show clearly the required depth of insertion into the bell.

B. DUCTILE IRON PIPE

All pipes shall be ductile iron pipe conforming to ANSI/AWWA Standard C151/A21.51-09, "Ductile-Iron Pipe, Centrifugally Cast, for Water". All pipe and fittings for water applications shall be in full compliance with ANSI/NSF 61, "Drinking Water System Components-Health Effects". Manufacturers shall maintain their NSF certification for the duration of the Contract and any extensions thereof.

The pipe thickness and outside diameter of pipe for sanitary sewer and water usage shall conform to Tables 1 and 2 (for push-on and mechanical joint pipe, respectively) of ANSI/AWWA Standard C151/A21.51-09 for the following sizes. The pressure class specified is the minimum permitted:

Size	Pressure Class
4-inch through 12-inch	350
14-inch through 20-inch	250
24-inch	200
30-inch through 54-inch	150

For restrained joint pipe, the thickness of the pipe barrel remaining after grooves are cut, if required in the design of restrained end joints, shall not be less than the nominal wall thickness of equal sized non-restrained joint pipe as shown above.

Minimum wall thickness for pipe having threaded flanges shall be Special Class 53 or Pressure Class 350.

Minimum pipe wall thickness required for corporation stops and tapped outlets shall be in accordance with Table A.1 of ANSI/AWWA C151/A21.51-09 for three full threads for design pressures up to 250 psi and four full threads for design pressures over 250 to 350 psi.

For flanged ductile-iron pipe with integrally cast flanges or threaded flanges, the nominal wall thickness of the pipe barrel shall be as specified in Section 3.3, "Joints and Accessories" under "Flanged Joints", herein below.

Minimum wall thicknesses for pipe having grooved-end joints shall be as shown in the following table:

DI Pipe and Fitting Sizes (inches)	**Grooved End Joint Wall Thickness***
16 and smaller	Special Class 53
18	Special Class 54
20	Special Class 55
24 to 36	Special Class 56
42 and larger	Special Class 53 or Pressure Class 350
*Special Class and Pressure Class per AWWA C151-09.	

Each piece of pipe shall be marked as required in Subsection 4.7 of AWWA C151-09. Letters and numerals on pipe sizes 12-inch and smaller shall be not less than 3/8-inch.

The OWNER absolutely reserves the right to require the use of "thickness" class pipe or higher pressure class pipe in applications where in the opinion of the Engineer such use is in the best interest of the OWNER. The Engineer's decision in this regard shall be final.

A sufficient quantity of non-toxic vegetable soap lubricant shall be supplied with each shipment of pipe. The soap lubricant shall be suitable for use in subaqueous trench conditions.

Single gasket push-on pipe shall be shipped in standard 18-foot or 20-foot lengths, but not

both. Restrained single-gasket push-on joint pipe shall be shipped in standard 18 or 20-foot lengths as specified above or fabricated lengths as noted in each order. At least two lengths of each size of single gasket push-on pipe furnished under each order shall be tested with circumferential gauges to ensure that the pipe may be cut at any point along its length and have an outside diameter which will be within the manufacturer's standard design dimensions and tolerances for plain pipe. These lengths shall be identified with an easily distinguished, painted marking, longitudinally along the full length of the pipe.

C. GASKETS

Water Mains shall use SBR gaskets for typical applications and field conditions. Gaskets constructed of EPDM, Nitrile are used in areas where geotechnical information indicates the presence of moderate contamination is possible. All water mains shall use gaskets material with NSF 61 approval.

Sewer Mains shall use Neoprene or EPDM gaskets for typical applications and field conditions.

Areas with chemical or hydrocarbon contamination shall use the gasket material as recommended by the Ductile Iron Pipe Research Association (dipra.org) or the gasket manufacturer.

D. FITTINGS

Fittings Conforming to ANSI/AWWA C110/A21.11-12 (Water & Sewer Use)

Restrained push-on joint fittings shall be cast ductile iron for use with ductile-iron pipe as specified above. Standard mechanical joint, push-on joint and flanged joint fittings shall also be ductile iron for use with ductile-iron pipe as specified above. Cast ductile-iron fittings in the 3-inch through 24-inch size range shall be pressure rated at 350 psi, minimum; (except flange-joint fittings shall be rated at 250 psi, minimum); and in the 30-inch through 54-inch-inch size range shall be pressure rated at 250 psi, minimum. All fittings with mechanical joints, flange joints and push-on joints shall conform to ANSI/AWWA Standard C110/A21.10-12, "Ductile-Iron and Gray-Iron Fittings ". In addition, fittings with mechanical joints and push-on joints shall conform to ANSI/AWWA Standard C111/A21.11-12, "Rubber-Gasket Joints for Ductile-Iron Pressure Pipe and Fittings".

The weight of fittings shall be as given in ANSI/AWWA C110/A21.11-12 for ductile-iron fittings. The weight of mechanical joint fittings shall be as established in Tables 4 through 13. The weight of flanged joint fittings shall as established in Tables 14 through 21.

Fittings Conforming to ANSI/AWWA C153/A21.53-11 (Water & Sewer Use)

All fittings shall be cast ductile-iron for use with ductile-iron pipe as specified above. Fittings in the 3-inch through 24-inch size range shall be pressure rated at 350 psi, minimum; 30-inch through 48-inch size range shall be pressure rated at 250 psi, minimum; and in the 54-inch through 64-inch size range shall be pressure rated at 150 psi, minimum (except for those fittings such as plugs, caps, and sleeves which are normally rated at a higher pressure). No flanged fittings or mixtures of flanged with other end type fittings will be allowed in the range of 3-inch through 48-inch. All fittings with mechanical joints, flange joints and push-on joints shall conform to ANSI/AWWA Standard C153/A21.53-11, "Ductile-Iron Compact Fittings ". In addition, fittings with mechanical joints and push-on joints shall conform to ANSI/AWWA

Standard C111/A21.11-12, “Rubber-Gasket Joints for Ductile-Iron Pressure Pipe and Fittings" except as otherwise allowed in C153. Mechanical joint glands shall be ductile-iron only.

The weight of a fitting supplied under the contract shall not be less than ninety-five (95) percent of the tabulated nominal weight supplied by the manufacturer’s catalog literature for that fitting. Further, the weight of fittings supplied shall not be more than five (5) percent above the same tabulated nominal weight.

E. JOINTS AND ACCESSORIES

Joints in below-ground piping shall be flexible push-on or Mechanical joints, except where flanged joints are required to connect to valves, meters, and other equipment. Provide unrestrained buried joints except where restrained joints are required (tees, bends, plugs, hydrants, inline valves, reducers, vertical offsets, horizontal offsets etc.) or specifically shown in the drawings or details. Joints in aboveground or submerged piping or piping located in vaults and structures shall be grooved end or flanged.

Restrained joints for piping 6 inches and larger shall be American Cast Iron Pipe "Lok-Ring" or "Flex-Ring," U.S. Pipe "TR-Flex," or equal. Weldments for restrained joints shall be tested by the liquid penetrant method per ASTM E165. Restrained joints for field closures shall be “Megalug” by EBAA Iron.

Push-On Type Joints (Single Gasket and Single Gasket with Gasket Restraint)

Push-on joints shall conform to ANSI/AWWA Standard C111/A21.11-12.

The required number of gaskets for each push-on joint pipe plus one extra for every 50 joints or fraction thereof, shall be furnished with each order. The gaskets shall be shipped in suitable protective containers. All single gasket pipe shall be as manufactured by United States Pipe and Foundry Company (Tyton), by the American Cast Iron Pipe Company (Amarillo Fastite), by McWane, Inc. (Mix of Tyton and Fastite), Tyler/Union (Tyton) or approved equal.

Push-on joints together with both their regular and gasket-restraint gaskets shall be of the design, dimensions and tolerances of either those provided by American Cast Iron Pipe Company (Amarillo Fastite/Fast-Grip) or those provided by United States Pipe and Foundry Company (Tyton/Field Lok). No other designs will be acceptable.

The pressure rating shall be stamped on the restrained gasket. The restrained gasket and joint restraining system shall conform to ANSI/AWWA Standard C111/A21.11-12 rated at the following:

Size	Pressure Rating (Min.)
4-inch through 12-inch	350
14-inch through 20-inch	250
24-inch	200
30-inch and above	150

The restrained gasket shall be manufactured a color other than black to allow for visual inspection of the pipeline. The restrained gasket color shall be consistent throughout the system and shall be inherent within the rubber, not painted.

Mechanical Joints

Mechanical joints for fittings shall conform to ANSI/AWWA Standard C111/A21.11-12. Bolt holes for mechanical joints shall be equally spaced, and shall straddle the vertical centerline. Tee head bolts and hexagonal nuts for all mechanical joints in fittings shall be of high strength low-alloy steel with composition, dimensions and threading as specified in ANSI/AWWA Standard C111/A21.11-12. Glands shall be of ductile-iron construction for ductile iron fittings, and cast gray iron or ductile iron for cast gray-iron fittings.

The proper number of gaskets, glands, bolts and nuts, all conforming to ANSI/AWWA Standard C111/A21.11-12, plus one extra gasket for every 10 joints or fraction thereof, shall be furnished with each order. The gaskets and joint accessories shall be shipped in suitable protective containers. Follower glands held in place with set screws will not be acceptable. Segmented glands will not be acceptable.

Mechanical Joint Megalug-Type Restraining Systems

In any mechanical joint or push on joint underground piping system restrained glands may be utilized for underground pipeline. The ASTM A536 ductile iron casting of the restrained gland shall be bonded powder coated. The wedge and wedge assembly shall have a bonded liquid polymer coating applied for corrosion protection. The gland shall utilize torque limiting twist off wedge actuation screws.

Foreign and domestic manufactured restrained glands are allowed for pipelines 24-inches and below unless otherwise required by the OWNER due to Federal or State funded projects which require domestic manufacture. In sizes 30, 36, 42 and 48-inch the prior written permission of the Engineer is required to use non-domestic manufactured restraining glands. The country of origin shall be clearly identified on the restraining gland and shop drawing.

The OWNER absolutely reserves the right to require other forms of restraint where in the opinion of the Engineer the use of this form of restraint is not in the best interest of the OWNER and his decision shall be final. Use of this type of restraint is restricted to underground mechanical joint or push-on joint applications and in general may not be used above grade or as a substitute for flanged joints.

The Megalug restraint systems manufactured by EBAA Iron Sales, Eastland Texas, will be considered the standard of quality for comparison purposes and if the OWNER has any doubts as to the durability, quality or ability to restrain of a proffered substitute, the entity offering the substitute shall bear the entire burden of proving this equality to the complete satisfaction of the Engineer. Other manufacturers producing this type of restraint system shall submit data with their shop drawings showing that their restraint system has been in the marketplace for a minimum of three years in this country.

Each thrust-resistant mechanical joint or push on joint made up with this type of restraint and the pipe and fitting of which it is a part, shall be designed to withstand an axial thrust from an internal pipeline pressure of at least 150 psi at bulkhead conditions without reduction because of its position in the pipeline nor for support from external thrust blocks.

This type of joint restraint shall not be used above grade except as previously specified nor shall it be used as a carrier pipe within a casing. This type of restraint shall not be used with tape wrapped pipe or with too great a coating thickness on the exterior of the pipe.

Restrained Push-on Joints (Single Gasket Non-Gasket Restrained)

Restrained joints in pipe and fittings shall be of the single gasket push-on type, and shall conform to all applicable provisions of ANSI/AWWA Standard C111/A21.11 and the following requirements:

Thickness of the pipe barrel remaining at grooves cut, if required in the design of restrained end joints, shall not be less than the nominal wall thickness of equal sized non-restrained pipe as specified in Section 3.1 above.

Restrained joints using field welding, set screws, or gaskets with expanding metal inserts are not acceptable.

The restraining components, when not cast integrally with the pipe and fittings, shall be ductile iron or a high strength non-corrosive alloy steel.

Tee head bolts and hexagonal nuts for all restrained joints in pipe and fittings shall be of high strength low-alloy steel with composition, dimensions and threading as specified in ANSI/AWWA Standard C111/A21.11, except that the length of the bolts shall meet the requirements for the restrained joint design.

The proper number of gaskets, bolts, nuts and all necessary joint material, plus one extra gasket for every 10 joints or fraction thereof, shall be furnished with each order. The gaskets and joint accessories shall be shipped in suitable protection containers.

Each thrust-resistant joint and the pipe and fitting of which it is a part, shall be designed to withstand the axial thrust from an internal pipeline pressure of at least 150 psi at bulkhead conditions without reduction because of its position in the pipeline nor for support from external thrust blocks.

Restrained push-on joint pipe and fittings shall be capable of being deflected after assembly. During deflection, all components in the restrained system shall be in contact to provide an equal force on all contact areas.

When restrained spigot ends are ordered for items of Group A, the corresponding bell ends of the pipe to be restrained (also within Group A), shall be furnished with the required matching restraining features at no additional cost other than the price bid per foot of pipe or lump sum price.

Flanged Joints

Connecting pieces with one end flanged and the other end either plain-end or mechanical joint, shall conform to ANSI/AWWA Standard C110/A21.10. Joint material for both the flanged end and the mechanical joint accessories for connecting pieces with a mechanical joint end shall be furnished as specified.

Other types of flanged fittings, and flanged pipe, shall conform to the following requirements unless otherwise stated in the order:

Flanged fittings shall conform to ANSI/AWWA Standard C110/A21.10, as specified hereinabove.

Flanged ductile-iron pipe with integrally cast flanges shall be manufactured in accordance with

ANSI/AWWA Standard C151/A21.51, and with provisions contained hereinabove for centrifugally cast ductile iron pipe, and shall be furnished with ANSI Standard Class 125 flanges, plain faced and drilled, conforming to ANSI Standard B16.1, "Cast Iron Pipe Flanges and Flanged Fittings", latest revision. Hollow back flanges are not acceptable.

Flanged ductile-iron pipe with threaded flanges shall be manufactured in accordance with ANSI/AWWA Standard C115/A21.15, "Flanged Ductile-Iron Pipe With Ductile-Iron or Grey-Iron Threaded Flanges", and shall be rated for a working pressure of 250 psi, minimum. The nominal thickness of flanged ductile-iron pipe, 6-inch and larger, shall not be less than those shown in Table 1 of ANSI/AWWA Standard C115/A21.15. The nominal thickness of 4-inch flanged ductile-iron pipe shall be Class 54 (min.) conforming to Tables 3 and 4 of ANSI/ Standard C151/A21.51. Flanges shall be solid-back.

The pipe shall be furnished with ANSI Standard Class 125 flanges, plain faced and drilled, conforming to ANSI Standard B16.1, latest revision. Hollow back flanges and grey-iron flanges shall not be acceptable for use as threaded flanges. Threaded flanges shall be individually fitted and machine tightened on the threaded pipe by the manufacturer, and shall not be interchangeable in the field.

Flanges shall be back-faced parallel to the face of flange. Prior to assembly of the flange onto the pipe, apply a thread compound to the threads to provide a leak-free connection. There shall be zero leakage through the threads at a hydrostatic test pressure of 250 psi without the use of the gasket. Pipe lengths shall be as ordered. Removal of flanges, cutting and re-threading the pipe, and re-installing the flanges will not be permitted in any case. Where a raised face flange connects to a flat-faced flange, remove the raised face of the flange.

All flanges on ductile-iron pipe and fittings shall be of ductile iron, class 70-50-5 in accordance with ANSI/AWWA C110/A21.10. All joint materials for flanged pipe and fittings, shall be supplied with all pipe or fittings ordered. Bolts and nuts shall comply with all requirements of Appendix Section A.1 of ANSI/AWWA Standard C115/A21.15-11 except that both shall be stainless steel. Bolts shall be of sufficient length to fully engage all threads in the nut. Unless ring gaskets are specified, gaskets shall be full-faced, and gaskets shall be of 1/8-inch thickness. Gaskets shall fully conform to the requirements of ANSI/AWWA Standard C115/A21.15-11 Appendix Section A.2 except that gaskets shall be SBR for water and neoprene for sewer usages.

Grooved-end Fittings and Couplings

Grooved-end fittings shall conform to ANSI/AWWA C110/A21.10-12 with grooved ends conforming to ANSI/AWWA C606-11, radius cut rigid joints. Fitting material shall conform to ASTM A48, Class 30; ASTM A126, Class B; or ASTM A536, Grade 65-42-10. Wall thickness of ductile-iron (ASTM A536) fittings shall conform to AWWA C110 or C153; wall thickness of cast-iron fittings shall conform to AWWA C110. Fittings and couplings shall be furnished by the same manufacturer.

Grooved-end pipe couplings shall be ductile iron, ASTM A536 (Grade 65-45-12). Gaskets shall be Buna-N and shall conform to ASTM D2000. Bolts in exposed service shall conform to ASTM A183, 110,000-psi tensile strength. Bolts in buried or submerged service shall be ASTM A193, Grade B8, and Class 2.

Couplings for pipe 24 inches and smaller shall conform to AWWA C606 for flexible radius ductile-iron pipe, except where rigid radius couplings are required to connect to fittings.

Couplings for pipe sizes 30 and 36 inches shall be in accordance with the coupling manufacturer's published literature for tolerances and dimensions for flexible and rigid radius cut joints. Couplings shall be Victaulic Style 31, Gustin-Bacon No. 500, or equal.

Couplings for pipe larger than 36 inches shall conform to AWWA C606 for shouldered end pipe. Couplings shall be Victaulic Style 44 or equal.

Grooved-end adapter flanges for piping 24 inches and smaller having an operating pressure of 150 psi and less shall be Victaulic Style 341 or 342 or equal. Flange dimensions shall conform to ASME B16.1, Class 125.

Grooved-end transition couplings for connecting ductile-iron pipe 12 inches and smaller to steel pipe shall be Victaulic Style 307 or equal.

Outlets and Nozzles

Provide outlets three quarters of an inch and smaller by direct tapping Ductile Iron Pipe in accordance with AWWA C600-10, Section 4.8. Provide outlets larger than three quarters of an inch up to 2 inches by tapping the pipe and attaching a service clamp. or use a threaded welded-on boss. Use stainless steel clamps for exposed piping. For outlets larger than 2 inches, use a tee with a flanged outlet. For outlets larger than 2 inches in buried piping, use a tee with a restrained joint outlet.

Ductile-Iron Pipe Weldments

All welding to ductile-iron pipe, such as for bosses, joint restraint, and joint bond cables, shall be done at the place of manufacture of the pipe. Perform welding by skilled welders experienced in the method and materials to be used. Welders shall be qualified under the standard qualification procedures of the ASME Boiler and Pressure Vessel Code, Section IX, Welding Qualifications.

Welds shall be of uniform composition, neat, smooth, full strength, and ductile. Completely grind out porosity and cracks, trapped welding flux, and other defects in the welds in such a manner that will permit proper and complete repair by welding.

Material for fittings with welded-on bosses shall have a Charpy notch impact value of minimum 10 ft-lbs under the conditions defined in ANSI/AWWA C151/A21.51-09. Test completed welds by the liquid penetrant method per ASTM E165.

Completed welds shall be inspected at the place of manufacture by the liquid penetrant method. Conform to the requirements specified in ASTM E165, Method A, Type I or Type II. The materials used shall be water washable and nonflammable.

E. LININGS AND COATINGS

Saltwater Intrusion and Corrosive Soils Requirements

In saltwater intrusion areas where the installation is subject to groundwater level variation (East of I-95 or saltwater intrusion line), the OWNER shall require the use of V-Bio Enhanced Polyethylene Encasement and ductile iron pipe with a zinc basecoat under the

asphaltic topcoat. All ductile iron pipe and fittings shall be wrapped with the V-Bio Polyethylene Enhanced Encasement and have the zinc protective coating factory applied.

For corrosive soils encountered outside of saltwater intrusion areas during construction V-Bio Polyethylene Encasement shall be installed to protect the ductile iron main, fittings and valves.

Zinc Basecoat: The exterior of ductile iron pipe shall be coated with a layer of arc-sprayed zinc per ISO 8179. The mass of the zinc applied shall be 200 g/m^2 of pipe surface area. A finishing layer topcoat shall be applied to the zinc. The mean dry film thickness of the finishing layer shall not be less than 3 mils with a local minimum not less than 2 mils. The coating system shall conform in every respect to ISO 8179-1 "Ductile iron pipes - External zinc-based coating - Part 1: Metallic zinc with finishing layer. Ductile iron fittings shall also have a zinc protective coating sprayed on at the factory at a minimum of 3 mils.

The V-Bio Polyethylene Enhanced Encasement shall be accordance with AWWA C600 and ANSI/AWWA C105/A21.5, “Polyethylene Encasement of Ductile-Iron Pipe Systems”. Color shall be blue for potable water, purple for recycled water, and green for sanitary sewage service. Polyethylene encasement for use with ductile iron pipe systems shall consist of three layers of co-extruded linear low density polyethylene (LLDPE), fused into a single thickness of not less than 8 mils. The inside layer of the polyethylene wrap to be in contact with the pipe exterior shall be infused with a corrosion inhibitor and antimicrobial biocide to to control galvanic corrosion. Product: V-Bio or approved equal.

Polyethylene encasement for ductile-iron pipe shall be supplied as a flat tube meeting the dimensions of Table 1 in AWWA C105 and shall be supplied by the ductile-iron pipe manufacturer.

Plastic adhesive tape shall consist of polyolefin backing and adhesive which bonds to common pipeline coatings including polyethylene. Products: Canusa Wrapid Tape; Tapecoat H35; Polyken 934; AA Thread Seal Tape, Inc.; or approved equal.

Install the polyethylene to completely encase the pipe and fittings to provide a watertight corrosion barrier. Continuously secure overlaps and ends of sheet and tube with polyethylene tape. Make circumferential seams with two or more complete wraps, with no exposed edges. Tape longitudinal seams and longitudinal overlaps, extending tape beyond and beneath circumferential seams. Wrap bell-spigot interfaces, restrained joint components, and other irregular surfaces with wax tape or moldable sealant prior to placing polyethylene encasement. Minimize voids beneath polyethylene.

Place circumferential or spiral wraps of polyethylene tape at 2-foot intervals along the barrel of the pipe to minimize the space between the pipe and the polyethylene. Overlap adjoining polyethylene tube coatings a minimum of 1 foot and wrap prior to placing concrete anchors, collars, supports, or thrust blocks. Hand-wrap the polyethylene sheet, apply two complete wraps with no exposed edges to provide a watertight corrosion barrier, and secure in place with 2-inch-wide plastic adhesive tape. Repair polyethylene material that is damaged during installation. Use polyethylene sheet, place over damaged or torn area, and secure in place with 2-inch-wide plastic adhesive tape.

Repair polyethylene encasement at all service connections in accordance with AWWA C600-10, Section 4.8.

Asphaltic Coating

All Ductile Iron pipe and fittings shall be outside-coated with an asphaltic material applied by means of the airless spray method. The exterior coating shall comply with ANSI/AWWA C151/A21.51 for this type of coating, shall be smooth without pinholes, thin, bare or overly thick areas. Smoothness shall be such that when hand rubbed, no “sand paper” feeling will be experienced and such that the spigot area will readily slide through the gasket without pulling, tearing, rolling or otherwise disturbing the sealing capabilities of the gasket. Spigot ends shall be beveled prior to coating to an extent that will permit ready insertion of the spigot through the gasket area.

Cement-Mortar Lining

Ductile Iron Pipe and fittings unless otherwise specified shall be double-thickness cement-lined and seal-coated in accordance with ANSI/AWWA Standard C104/A21.4-14, "Cement-Mortar Lining for Ductile-Iron Pipe and Fittings ".

Ceramic Epoxy Lining

Ductile Iron Pipe and fittings where so specified shall be lined with ceramic epoxy

Ceramic epoxy shall contain pigmentation to resist ultraviolet exposure under the same conditions.

All ductile iron pipe and fittings for which ceramic epoxy lining is to be applied shall be delivered to the application facility without asphalt, cement lining or other lining on the interior surface or the first 6 inches on the spigot end of the pipe exterior.
Ceramic epoxy material shall be a high-build multi-component Amine cured Novalac epoxy, Protecto 401, by Vulcan Painters, Inc. of Bessemer, AL 35021 or MDWASD-approved equal. Permox CTF is also an acceptable sanitary sewer lining.

Ceramic epoxy material shall meet the following criteria and shall be accompanied by certification of the following test results:

A. A permeability rating of 0.00 when tested according to Method A of ASTM E96-00 "Test Method for Water Vapor Transmission of Materials", Procedure A with a test duration of 30 days.

B. The following test must be run on coupons from factory lined ductile iron pipe:

   1. ASTM B117 Salt Spray (scribed panel) - Results to equal no more than 0.5mm undercutting after one year.

   2. ASTM G95 Cathodic Disbondment 1.5 volts @ 77 degrees F. Results to equal no more than 0.5mm undercutting after 30 days.

   3. Immersion Testing rating using ASTM D714-87 (1994).
      a. 20% Sulfuric Acid - No effect after one year.
      b. 25% Sodium Hydroxide - No effect after one year.
      c. 160° F. Distilled Water - No effect after one year.
      d. 120° F. Tap Water (scribed panel) - 0.0 undercutting after one year with no effect.

C. A statement from the manufacturer attesting to the fact that at least 20% of the volume of the lining contains ceramic quartz pigment.

D. A statement concerning recoat ability and repair to the lining.

Ceramic Epoxy Application

a. The lining shall be applied by a competent firm with a successful history of applying linings to the interior of ductile iron pipe and fittings.

b. Surface Preparation
Prior to abrasive blasting, the entire area which will receive the protective compound shall be inspected for oil, grease, etc. Any areas where oil, grease or any substance is present which can be removed by solvent shall be solvent cleaned using the guidelines outlined in SSPC-1 Solvent Cleaning. After the surface has been made free of grease, oil or other substances, all areas to receive the protective compounds shall be abrasive blasted using compressed air nozzles with sand or grit abrasive media. The entire surface to be lined shall be struck with the blast media so that all rust, loose oxides, etc., are removed from the surface. Only slight stains and tightly adhering annealing oxide may be left on the surface. Any area where rust reappears before coating must be re-blasted to remove all rust.

c. Lining Application
After the surface preparation and within 8 hours of surface preparation, apply to the interior of pipe and fittings a minimum forty (40) mils dry film thickness of the protective lining. No lining shall take place when the substrate or ambient temperature is below 40 degrees Fahrenheit. The surface also shall be dry and dust free. If flange ends are included in the Project, the linings shall not be used on the face of the flange; however, full face gaskets must be used to protect the ends of the pipe. The 40-mil system shall not be applied in the gasket grooves.

d. Coating of Gasket and Spigot Ends
Coat the gasket area and exterior of the spigot end for 6 inches back from the end of the spigot with six (6) mils minimum, ten (10) mils maximum of Protecto Joint Compound. This coating shall be applied by brush to ensure complete coverage. Care shall be taken that the coating is smooth without excess buildup in the gasket groove or on the spigot end. All material for the gasket groove and spigot end shall be applied after the application of the lining as specified in the preceding paragraph.

e. Number of Coats
The number of coats of lining material applied shall be as recommended by the lining manufacturer. However, in no case shall this material be applied above the dry thickness per coat recommended by the lining manufacturer in printed literature. The time between coats shall never exceed that time recommended by the lining material manufacturer. No material shall be used for lining which is not indefinitely recoated able with itself without roughening the surface.

f. Touch-Up and Repair
Protecto Joint Compound shall be used for touch-up or repair. Procedures shall be in accordance with manufacturer's recommendations.

F. INSPECTION AND CERTIFICATION

a. Inspection
   1. All ceramic epoxy lined ductile iron pipe and fitting linings shall be checked for thickness using a magnetic film thickness gauge. The thickness testing shall be done using the method outlined in SSPC-PC-2 Film Thickness Rating. Re-line any pipe whose lining is below the specified minimum thickness.

   2. The interior lining of all pipe and fittings shall be tested for pinholes with a nondestructive 2,500 volt test. Re-line any pipe not passing the test.

   3. Each pipe joint and fitting shall be marked with the date of application of the lining system and with its numerical sequence of application on the date.

Procedures for Sealing Cut Ends and Repairing Field Damaged Areas

1. Remove burrs caused by field cutting of ends or handling damage and smooth out the edge of the lining if rough.

2. Remove all traces of oil, grease, asphalt, dust, dirt, etc.

3. Areas of loose or damaged lining associated with field cutting the pipe shall be repaired, if approved by the Engineer, as recommended by the pipe manufacturer. The damaged area shall be stripped back by chiseling or scraping about 1 to 2 inches into the well-adhered lining before patching.

   The exposed metal and the 1 to 2-inch lining overlap shall be roughened with a coarse grade of emery cloth (#40 grit), rasp or small chisel. Avoid wire brushing or similar buffing which would make the surface too smooth for good adhesion.

4. With the area to be sealed or repaired absolutely, clean and suitably roughened, apply a coat of Protecto Joint Compound by brush in accordance with the manufacturer's recommendations.

2.02 PIPE AND FITTINGS: POLY VINYL CHLORIDE (PVC)

A. Poly (vinyl chloride (PVC) pipe and fittings specified herein are small diameter PVC with threaded, flanged and solvent cemented joints.

B. All poly (vinyl chloride) (PVC) pipe and fittings shall be made from high impact, rigid poly (vinyl chloride) compounds. Pipe and fittings shall be marked indicating size, type and schedule, ASTM Designation, manufacturer or trade mark, and shall bear the NSF (National Sanitation Foundation) seal of approval. Wherever the abbreviation PVC is used in these Specifications in relation to pipe and fittings, it shall mean poly (vinyl chloride) plastic pipe and fittings as specified herein.

C. PVC pipe shall be Schedule 80 unless Schedule 120 pipe is called for on the Plans or by the Engineer, Type I, Grade I, or Class 12454B with socket ends, and shall comply with ASTM Standard D1785, "Poly (Vinyl Chloride) (PVC) Plastic Pipe, Schedules 40, 80 and 120".Products intended for contact with potable water shall be evaluated, tested, and certified for conformance with ANSI/NSF Standard No. 61 or the health effects portion of NSF Standard No. 14 by an acceptable certifying organization when required by the regulatory authority having jurisdiction.

D. Schedule 80 Socket-type fittings shall comply with ASTM Standard D2467, "Socket-Type Poly (Vinyl Chloride) (PVC) Plastic Pipe Fittings, Schedule 80" and D2464 "Specification for Threaded Poly Vinyl Chloride) (PVC) Plastic Pipe Fittings, Schedule 80, for threaded fittings.

E. Joining cement for PVC pipe and fittings shall comply with ASTM Standard D2564, "Solvent Cements for Poly (Vinyl Chloride) (PVC) Plastic Pipe and Fittings". Cemented joints shall be made in accordance with ASTM Standard D-2855, "Recommended Practice for Making Solvent-Cemented Joints with Poly (Vinyl Chloride) (PVC) Pipe and Fittings".

F. Flanges: One piece molded hub type flat face flanges, 125 pound standard as specified under fittings hereinbefore.

G. Gaskets: Full faced, 1/8-inch thick, Neoprene/EPDM (for sewer) or SBR (for water).

H. AISI Type 316 stainless steel, ASTM A193, Grade B8M hex bolts and ASTM A 194 Grade E8 hex head nuts. Bolts shall be fabricated in accordance with ANSI B 1812 and provided with washers of the same materials as the bolts.

2.04 PIPE AND FITTINGS: COPPER

A. Pipe: Copper pipe shall be Type K for interior piping and Type K Soft Temper for exterior piping, both conforming to ASTM B88, seamless, round, drawn tubing.

B. Fittings: Solder joint fittings shall be wrought copper and bronze fittings conforming to ANSI B16.22 or cast brass fittings conforming to ANSI Standard B16.18. Fittings for use with copper tubing shall be one of the following:

1. Cast Bronze Solder-Joint Fittings: Solder joint fittings of this type shall be cast bronze fittings conforming to ANSI B16.18, "Cast Brass Solder-Joint Fittings", and ASTM Standard B62, "Composition Bronze or Ounce Metal Castings", as manufactured by Chase Brass and Copper Co., Stanley G. Flagg & Co., Inc., or MDWASD-approved equal.

2. Wrought Copper Solder-Joint Fittings: Solder joint fittings of this type shall be wrought copper fittings in accordance with ASNI B16.22, "Wrought Copper and Bronze Solder-Joint Pressure Fittings".

C. Solder: Solder shall consist of 95 percent tin and 5 percent antimony. Soldering shall be in conformance with Section 3 of the Copper and Brass Research Association Copper Tube Handbook.

D. Connection of copper pipe or fittings with galvanized pipe or fittings shall be made with dielectric fittings. Connect copper pipe to direct-taps to Ductile Iron Pipe with an insulating union. Wrap the copper pipe with polyethylene tape at least two feet in length beyond the point of connection.

2.05 HIGH DENSITY POLYETHYLENE (HDPE) PIPE FOR USE IN POTABLE WATER SERVICES

A. Smooth wall high density polyethylene pipe for use in potable water services 3.5-inch nominal outside diameter and less shall meet ASTM D3350, and shall be PE 335434C. Pipe shall meet the standards of ASTM F714, as modified herein, including the "Government/Military Procure-

ment" sections. Minimum hydrostatic design basis shall be 1600 psi. In all cases, hydrostatic design basis and pressure rating shall be as determined using the methods of ASTM F714. Pipe of this type shall be butt-fusion welded at joints. All welding of joints shall be in strict conformity with the recommendations of the pipe manufacturer and by a firm or individual recommended to the Engineer of Record in writing by the manufacturer.

B. As a part of the shop drawing submittals, submit the following signed by a Florida Registered Engineer, all calculations to determine, the pipe thickness, SDR rating, allowable stresses, in accordance with ASME B31.8 -1992, Table A842.22 as required by the pipe manufacturer.

C. All mechanical fittings utilized with HDPE pipe and tubing services, shall conform with ANSI/AWWA C800-01 "Underground Service Line Valves and Fittings" as modified herein, shall utilize AWWA Standard (Mueller) threads on tapped pipe and tapping saddles; shall be; designed and manufactured to withstand a sustained working pressure of 150 psi and to restrain the pipe against pull out under loading beyond that causing tensile yield in the HDPE pipe or tubing connected. The manufacturer shall supply certification of these capabilities and fittings shall not be accepted or installed without said certification. If fittings are being supplied to the OWNER the certification shall ship with the fittings and payment will not be made without this certification. At the discretion of the Engineer, this certification may be required to be signed and sealed by a professional engineer licensed to practice in the state where the sup- plying firm is located or in the State of Florida. His decision in this regard shall be final.

D. In all cases, fittings shall be installed in strict accordance with the manufacturer's instructions.

1. HDPE PIPE FOR WATER SERVICES:

All 2-inch high density polyethylene pipe used for services shall be IPS-O.D. controlled with Standard Outside Dimension Ratio (SODR) of 9, pressure rating of 200 psi at a Factor of Safety of 2.5 or greater, nominal outside diameter of 2.375-inches, minimum wall thickness of 0.264-inches, PE 3408, all in conformance with ASTM D3035-95 "Polyethylene (PE) Plastic Pipe (DR-PR) Based on Controlled Outside Diameter". Pipe shall comply with ANSI/AWWA C901-96 "Polyethylene (PE) Pressure Pipe and Tubing, ½ In. (13 mm) Through 3 In. (76 mm), for Water Service" as modified herein. Pipe shall have a (natural) inner core with a blue colored outer shell.

Pipe shall have footage marks at a maximum interval of every two feet. Polyethylene material shall have a minimum cell classification in accordance with ASTM D3350-14 "Polyethylene Plastics Pipe and Fitting Materials" of 345444D for the core, which shall be 100% virgin material, and 345444E for the outer shell. Note that both of these materials are UV stabilized as signified by the "D" for natural colored and "E" for the colored shell. Pipe shall comply with NSF 61 or 14.

Submit manufacturer’s certification of compliance with all of the above requirements. Certification shall ship with the pipe on material sold to the OWNER and shall always be submitted with shop drawings and catalogue cuts. Certification shall be signed and sealed by a professional engineer licensed to practice in the State of Florida.

2. HDPE TUBING FOR WATER SERVICES:

All 1-inch high density polyethylene tubing used for services shall be CTS-O.D. Controlled with Standard Outside Dimension Ratio (SODR) of 9, pressure rating of 200 psi, nominal outside diameter of 1.125-inches, minimum wall thickness of 0.125-inches, PE 3608, all in conformance with ASTM D2737-12 "Polyethylene (PE) Plastic Tubing". Tubing shall com-

ply with ANSI/AWWA C901-08 "Polyethylene (PE) Pressure Pipe and Tubing, ½ In. (13 mm) Through 3 In. (76 mm), for Water Service" as modified herein. Tubing shall have a (natural) inner core with a blue colored outer shell.

Tubing shall have footage marks at a maximum interval of every two feet. Polyethylene material shall have a minimum cell classification in accordance with ASTM D3350-14 "Polyethylene Plastics Pipe and Fitting Materials" of 345444D for the core, which shall be 100% virgin material, and 345444E for the outer shell. Note that both of these materials are UV stabilized as signified by the "D" for natural colored and "E" for the colored shell.

Tubing shall comply with NSF 61 or 14. Submit Manufacturer' shall supply certification of compliance with all of the above requirements. Certification shall ship with the tubing on material sold to the OWNER and shall always be submitted with shop drawings and catalogue cuts. When required by the OWNER or his designee, certification shall be signed and sealed by a professional engineer licensed to practice in the State of Florida.

2.06 WALL SLEEVES, PIPES AND CASTINGS

A. Wall Sleeves: Wall sleeves shall be of cast iron, ductile iron or carbon steel with steel galvanized after fabrication as specified in Section 15065, Miscellaneous Materials, under wall pipe. Sleeves shall be provided with seals and shall be oversized as required for the installation of seals. Sleeves shall terminate flush with finished surfaces of walls and ceilings, and shall extend 2-inches above the finished floor. Escutcheons shall be provided at walls and floor to completely conceal the sleeves smaller than 3-inches. Escutcheons shall be brass or cast iron, nickel plated split-type.

B. Interior: Wall sleeves shall be installed for all piping passing through interior walls and floors, except where noted on the Drawings. Sleeves shall be of sufficient size to pass the pipe without binding.

C. Wall Sleeve Seals: Wall sleeve seals shall be modular mechanical type consisting of interlocking synthetic rubber links shaped to continuously fill the annular space between the pipe and wall sleeve. Links shall be loosely assembled with bolts to form a continuous rubber belt around the pipe with a pressure plate under each bolt head and nut. After the seal assembly is positioned in the sleeve, tightening of the bolts shall cause the rubber sealing elements to expand and provide an absolutely water-tight seal between the pipe and wall sleeve. The synthetic rubber shall be suitable for exposure to treated sewage effluent and groundwater. Bolts, nuts and hardware shall be 18-8 stainless steel. The seals shall be Link Seal as manufactured by Thunderline Corporation or MDWASD-approved equal, and the wall sleeve and seal shall be sized as recommended by the seal manufacturer.

D. All piping passing through exterior walls and base slabs shall be provided with wall pipes. All wall pipes shall be of ductile iron and shall have an intermediate flange or waterstop located in the center of the wall. Each wall pipe shall be of the same grade, thickness and interior coating as the piping to which it is joined. Those portions of the wall pipes that are buried shall have a coal tar outside coating.

2.07 STEEL CASING (JACKING AND BORING)

See Section 15070, "Jacking and Boring"

2.08 STEEL PIPE (AERIAL CROSSING)

See Section 15075, "Aerial Crossings"

PART 3 - EXECUTION

3.01 General:

A. Furnish and maintain all barricades and flashing warning lights necessary to warn of the construction throughout the Project.

B. Pipe and fittings shall at all times be handled with great care to avoid damage. Exercise particular care not to injure pipe coatings. In loading and unloading, they shall be lifted with cranes or hoists or slid or rolled on skidways in such manner as to avoid shock. Under no circumstances shall this material be dropped or allowed to roll or slide against obstructions.

C All work shall be performed by skilled workmen experienced in pipeline construction.

D. All pipe and fittings shall be adequately supported by clamps, brackets, straps, concrete supports, rollers or other devices as shown and/or specified. Supports or hangers shall be spaced so that maximum deflection between supports or hangers shall not exceed 0.050 inch for pipe filled with liquid, but shall not be further than 6 feet apart, whichever is closer, unless otherwise shown. All pipe supports shall be secured to structures by approved inserts or expansion shields and bolts.

E. All pipe shall be thoroughly cleaned internally before being installed. All pipes, except oxygen service, air and gas, shall be flushed with water and swabbed to assure removal of all foreign matter before installation. Air and gas piping shall be tapped with a hammer to loosen scale or other foreign matter that might be within the pipe, and then thoroughly blown with a high pressure air hose. Furnish and maintain suitable air compressor.

F. Whenever possible, the pipe shall be installed with minimum 48-inches of cover. Deviations shall not be installed without written approval by the Owner.

G. Joints may only be opened to adjust alignment by half of the AWWA or manufacturer's recommended opening (which is smaller).

H. Pipe Sleeves and Wall Casings: Pipe sleeves and wall casings shall be provided at the locations called for on the Drawings and specified herein. These units shall be as detailed and of the material as noted on the Drawings and specified herein. They shall be accurately set in the concrete or masonry to the elevations shown. All wall sleeves and castings required in the walls shall be in place when the walls are poured. Ends of all wall casings and wall sleeves shall be of a type consistent with the piping to be connected to them.

I. Tie Rods: Unless otherwise indicated on the Drawings, the size and number of tie rods for a joint or installation shall be as recommended by the manufacturer's design chart for a working pressure of 150 psi. Tie rods shall be installed as recommended by the manufacturer.

3.02 EXCAVATION FOR PIPING

A. Make all excavation necessary for the construction of the pipelines, connections, valves and appurtenances, to the lines and grades shown on the Plans.

B. Excavate the trench at least 6 inches below pipe laying grade as shown on the Plans. Install sheeting and shoring for the protection of workers in trenches, and where it is necessary for pipe installation and property protection or required by the Trench Safety Act. The cost of de-watering any excavation shall be at the Contractor's expense. The disposal of water removed from an excavation shall be in a manner which will not create a hazard, or be detrimental to the public health or to public or private property.

C. Obtain all necessary permits approving the location and proposed method of disposal before discharging water from any excavation into any portion of the public right-of-way or into any existing drainage structure or facility. Furnish and maintain all construction signs required.

3.03 INSTALLATION OF PIPE, FITTINGS AND VALVES

A. General:

1. The design Drawings are in some cases diagrammatic. They may not show every bend, off-set, elbow or other fitting which may be required in the piping for installation in the space allotted. . Install gravity lines at uniform grade to low point after field verification of low point invert.

2. The centerline of the pipe shall not vary by more than 2 inches from the location shown on the Plans and the top of the pipe shall not vary by more than 2 inches from the established grade, except at points where this tolerance must be changed to clear obstructions, or make connections.

3. Limit onsite pipe storage to a maximum of one week. Use unloading and installation procedures that avoid cracking of the lining. If necessary, use plastic sheet bulkheads to close pipe ends and keep cement-mortar lining moist. Deliver the pipe alongside the pipe laying access road over which the pipe trailer-tractors can travel under their own power. Place the pipe in the order in which it is to be installed and secure it from rolling. Sandbags may be used to support the pipe in the ditch but no pipe shall be laid on blocks, except by the written permission of the Engineer of Record. Do not move pipe by inserting any devices or pieces of equipment into the pipe barrel. Field repair linings damaged by unloading or installation procedures. Flanged joints, mechanical joints and push-on joints in cast iron pipe and fittings may be made under water.

B. Installation of Ductile Iron Pipe

1. Install Ductile Iron Pipe in accordance with ANSI/AWWA C600-10 “Installation of Ductile-iron Mains and Their Appurtenances”, and the following. For potable water pipelines, comply with NSF/ANSI 61 “Drinking Water System Components – Health Effects. All bends, tees, and plugs, unless otherwise specified, shall be backed with concrete to undisturbed ground. Provision shall be made to prevent concrete from adhering to plugs or bolts by wrapping in polyethylene sheet complying with ANSI/AWWA C105/A21.5-05.

2. Bolts, nuts and rubber gaskets for use in flanged and mechanical joints shall be stored under cover. During laying operations, do not place tools, clothing, or other materials in the pipe Gaskets shall not be exposed to heat, light or any petroleum products, shall be kept clean and shall not be handled with greasy or dirty hands. When pipe laying is not in progress, close the ends of the installed pipe by a child- and vermin-proof plug.

3. Assemble Flanged joints in accordance with the written recommendations of the pipe manufacturer. Before making up flanged joints in cast iron pipe and fittings, the back of each flange under the bolt heads, and the face of each flange shall have all lumps, blisters and excess bituminous coating removed and shall be wire brushed and wiped clean and dry. Cut the bore of the gaskets such that the gaskets do not protrude into the pipe when the flange bolts are tightened.

4. Before laying the ductile iron pipe, all lumps, blisters and excess asphaltic coating shall be removed from the bell and spigot ends of each pipe and the outside of the spigot and the inside of the bell wire brushed and wiped clean and dry. The entire gasket groove area shall be free of bumps or any foreign matter which might displace the gasket. The cleaned spigot and gasket shall not be allowed to touch the trench walls or trench bottom at any time. Vegetable soap lubricant shall be applied in accordance with the pipe manufacturer's recommendations, to aid in making the joint. Exercise caution to prevent damage to the gasket or the adherence of grease or particles of sand or dirt. Deflections shall be made only after the joint has been assembled.

5. Cutting of ductile iron pipe for inserting valves, fittings, etc., shall be done with a mechanical pipe saw in a neat and workmanlike manner without damage to the pipe, the lining, or the coating.

6. Unless otherwise directed, ductile iron pipe shall be laid with the bell ends facing in the direction of laying; and for lines on an appreciable slope, the bells shall, at the discretion of the Engineer, face upgrade. Small angular changes (less than 2.5 degrees) in horizontal alignment defined in the drawings by a point of inflection (PI) with no accompanying curve data shall be approximated as a curve by deflecting an equal amount of equal length pipe segments to create a curve equally distributed on both sides of the given PI. Accomplish a larger (greater than or equal to 2.5 degrees) change in horizontal alignment where a curve is not called for in the drawings through the use of an elbow placed at the station of the PI shown in the drawings. Small angular changes (less than 2.5 degrees) in vertical alignment may be accomplished by the use of pulled joints. For larger vertical deflections, place an elbow at the station and elevation of the vertical PI shown in the drawings.

7. Push-on and mechanical joints in ductile iron pipe and fittings shall be made in accordance with the manufacturer's written recommendations except as otherwise specified herein. Joints between push-on and mechanical joint pipe and/or fittings shall be made in accordance with AWWA Standard Specifications, "Installation of Ductile Iron Water Mains and Appurtenances," C600-10, except that deflection at joints shall not exceed one-half of the manufacturer's recommended allowable deflection, or one-half of the allowable deflection specified in AWWA C600-10, whichever is the lesser amount.

8. Flanged joints shall be used only where indicated on the Plans. Before making up flanged joints in the pipeline, the back of each flange under the bolt heads and the face of each flange shall have all lumps, blisters and excess bituminous coating removed and shall be wire brushed and wiped clean and dry. Flange faces shall be kept clean and dry when making up the joint, and the workmen shall exercise caution to prevent damage to the gasket or the adherence of grease or particles of sand or dirt. Bolts and nuts shall be tightened by opposites in order to keep flange faces square with each other, and to insure that bolt stresses are evenly distributed.

9. Bolts and nuts in flanged and mechanical joints shall be tightened in accordance with the written recommendations of the pipe manufacturer for a leak-free joint. Exercise caution to

prevent overstress. Torque wrenches shall be used until, in the opinion of the Engineer, the workmen have become accustomed to the proper amount of pressure to apply on standard wrenches.

C. Installation of PVC Pipe:

1. In the installation of glue joint PVC pipe, the pipe shall first be cut square and smooth. Wipe all surfaces to be connected with a cloth moistened with an appropriate solvent and remove any foreign matter from socket of fitting. Using an ordinary paint brush of width about equal to the nominal pipe size, apply a generous coat of cement to inside and shoulder of socket, flowing on but not brushing out. A similar coat shall then be applied to the end of the pipe for at least the same distance on the pipe as the depth of socket, and to the cut end. Pipe and fittings shall then be pressed firmly together and the pipe turned a quarter to a half turn to evenly distribute the cement. The cementing and joining operation must not exceed one minute. Allow 24 hours set-up time before applying pressure. Sand shall be used as backfill material around pipe installed underground.

2. Thread Sealant: Teflon tape.

3. All rigid PVC pipe shall be cut, made up, and installed in accordance with the pipe manufacturer's recommendations. Plastic pipe shall be laid by snaking the pipe from one side of the trench to the other. Offset shall be as recommended by the manufacturer for the maximum temperature variation between time of solvent welding and during operation.

4. Schedule 80 pipe shall not be threaded. Use Schedule 80 threaded nipple where necessary to connect to threaded valve or fitting.

5. Only strap wrenches shall be used for tightening threaded plastic joints, and care shall be taken not to over tighten these fittings.

6. Provide adequate ventilation when working with pipe joint solvent cement.

7. Testing: All lines shall be hydrostatically tested at the pressures specified elsewhere herein or at the design pressures.

8. Supports And Hangers: In accordance with the manufacturer's recommendations.

D. Installation of Copper Pipe:

1. Tubing above ground shall, whenever possible, be run in full lengths between fittings, valves and connections and joints shall be kept to a minimum. All connections shall be made without sharp bends or kinks in the tubing. Above ground tubing shall be supported at short intervals to prevent sagging and vibration.

2. All copper pipe shall be reamed to full diameter before joining. The ends of pipe and the inside of fittings shall be cleaned and flux applied to the entire area of pipe to be soldered.

E. Joint Pipe:

1. Threaded Pipe: Ream all pipe after cutting and before threading. Use non-hardening pipe compound "Tite-Seal" or approved equal, on male threads only.

2. Provide nipples of same material and weight as pipe used. Provide extra strong nipples

when length of unthreaded part of nipple is less than 1-1/2".

3. Provide reducing fittings rather than bushings where changes in pipe sizes occur.

4. Provide dielectric unions or flanges between copper and steel piping and between brass-ware and steel. Do not use steel and copper piping in the same system without such isolation.

F. Unions: Provide unions or flanges in all domestic water service lines at each piece of equipment, specialty valves or at other locations required for ready disconnect.

G. Pipe Protection:

1. Paint all un-insulated metal (ductile iron or steel) piping underground with two coats of asphaltic paint.

2. Wrap soil pipe that touches metal or is exposed to masonry with a layer of 6 mil polyethylene.

3. Spirally wrap all pipe lines embedded in concrete with two layers of 30 lb. felt prior to placing the concrete.

4. Coat all exposed threads on galvanized steel pipe after assembly with two coats of zinc chromate.

H. Cleaning and Testing: All of the piping installed under this project shall be tested as follows and as directed by the Engineer.

1. With exceptions as noted below, all ductile iron piping installed under this Contract shall be cleaned and tested according to Paragraph I hereinbelow in this Section:
   a) Only potable water piping shall be disinfected.
   b) No leakage shall be permitted for flanged piping.
   c) No leakage shall be permitted for any type of above ground piping.

2. Unless otherwise specified elsewhere herein, all PVC pressure system bushings and galvanized steel piping shall be tested at 100 psig. No leakage will be permitted.

I. Installation of Aboveground and Exposed Piping

1. Aboveground and exposed pipe fittings, valves and accessories shall be installed as shown or indicated on the Drawings.

2. Piping shall be cut accurately to measurements established at the job site and shall be worked into place without springing or forcing, properly clearing all equipment access areas and openings. Changes in sizes shall be made with appropriate reducing fittings rather than bushings. Pipe connections shall be made in accordance with the details shown and manufacturer's recommendations. Open ends of pipe lines shall be properly capped or plugged during installation to keep dirt and other foreign material out of the system. Pipe supports and hangers shall be provided where indicated and as required to insure adequate support of the piping.

3. Welded connections shall be made in conformity with the requirements of AWWA Standard C 206 and shall be done only by qualified welders. The Engineer may, at his option, require certificates that welders employed on the work are qualified in conformity with the requirements of this standard and/or sample welds to verify the qualifications of the welders. Before testing, field welded joints shall be coated with the same material as used for coating its pipe in accordance with the requirements of AWWA.

4. Flanged joints shall be made up by installing the gasket between the flanges. The threads of the bolts and the faces of the gaskets shall be coated with a suitable lubricant immediately before installation.

5. Joints using Dresser couplings shall be made up as recommended by the manufacturer.

6. Use of perforated band iron (plumber's strap), wire or chain as pipe hangers will not be acceptable. Supports for pipe less than 1-1/2 inches nominal size shall not be more than 8-feet on centers and pipe 2-inches nominal size and larger shall be supported at not more than 10-feet on centers, unless otherwise indicated. Supports for PVC pipe shall be spaced one-half the distance specified above unless otherwise indicated. Any noticeable sagging shall be corrected by the addition of extra supports at the Contractor's expense.

J. INSTALLATION OF HDPE SERVICES

Furnish and install a 10 gauge stranded copper blue tracer wire above all HDPE services.

3.04 FIELD QUALITY CONTROL

A. All water mains shall be flushed to remove all sand, debris, rock and other foreign matter. Dispose of the flushing water without causing a nuisance or property damage.

B. Pressure and Leakage Testing: Hydrostatically test all pressure pipe. The test pressure for potable water mains shall be 150 psi. The test pressure for sewage force mains shall be 100 psi. Test Ductile Iron Pipe mains in accordance with ANSI/AWWA C600 latest edition once all backfill is in place and fully compacted, and after all thrust blocks have cured to their design strength. Do not test against closed valves. All pumps, piping and gauges shall be furnished, installed and operated by the Contractor and all such equipment and devices and their installation shall be approved by the Engineer. Pump shall be of a non-pulsating type suitable for this application and gauge accuracy certification may be required at the Engineer of Record's discretion. All pressure and leakage testing shall be done in the presence of a representative of the OWNER as a condition precedent to the approval and acceptance of the system.

C Disinfection:

Disinfect in accordance with ANSI/AWWA C651-14 – Disinfecting Water Mains. During the period that the chlorine solution or slug is in the section of pipeline, open and close valves to obtain a chlorine residual at hydrants and other pipeline appurtenances. Swab exposed faces of valves and blind flanges prior to bolting flanges in place with a 1% sodium hypochlorite solution. Disinfect isolation valves, pipe, and appurtenances per AWWA C651, Section 4.7.

Flush with potable water until discolored water, mud, and debris are eliminated. Swab interior of pipe and fittings with a 1% sodium hypochlorite solution. After disinfection, flush with potable water again until water is free of chlorine odor. After confirming the chlorine residual, flush the

excess chlorine solution from the pipeline until the chlorine concentration in the water leaving the pipe is either within 0.5 mg/L of the replacement water or no higher than that generally prevailing in the distribution system.

Discharge of chlorinated water into watercourses or surface waters is regulated by the National Pollutant Discharge Elimination System (NPDES). Disposal of the chlorinated disinfection water and the flushing water is the Contractor's responsibility. Schedule the rate of flow and locations of discharges in advance to permit review and coordination with Owner and cognizant regulatory authorities. For measuring chlorine concentration, supply and use a medium range, drop count, DPD drop dilution method kit per AWWA C651, Appendix A.1. Maintain kits in good working order available for immediate test of residuals at point of sampling.

D. Tests for Drain and Gravity Sewer Lines:

1. Drain and gravity sewer lines shall be tested for infiltration and exfiltration.

2. The allowable limits of infiltration or exfiltration or leakage for the drain or sewer lines, or any portion thereof shall not exceed a rate of 100 gallons per inch of internal pipe diameter per mile of pipe per 24 hours with no allowance for laterals or manholes. Duration of test shall be a minimum of two hours.

3. Any part or all of the system may be tested for infiltration or exfiltration, as directed by the Engineer. Prior to testing for infiltration, the system shall be pumped out so that normal infiltration conditions exist at the time of testing. The amounts of infiltration or exfiltration shall be determined by pumping into or out of calibrated drums, or by other approved methods.

4. The exfiltration test will be conducted by filling the portion of the system being tested with water to a level which will provide a minimum head of 2-feet in a lateral connected to the test portion, or, in the event there are no laterals in the test portion, a minimum difference in elevation of 5-feet between the crown of the highest portion of the drain or sewer and the test level.

5. Where infiltration or exfiltration exceeds the allowable limits specified herein, the defective pipe, joints, or other faulty construction shall be located and repaired by the Contractor.

6. Furnish all labor, equipment and materials and shall conduct all testing required, under the direction of the Engineer of Record. No separate payment will be made for this work and the cost for this work shall be included in the prices quoted in the Proposal.

7. Locate and repair all leaks until the leakage is reduced to the limits specified. Any observed leaks or obviously defective joints or pipes shall be repaired or replaced as directed by the Engineer of Record, even though the total leakage is below that specified above.

END OF SECTION

SECTION 15065

MISCELLANEOUS MATERIALS

PART 1 - SCOPE

1.01 GENERAL

Miscellaneous materials necessary for a complete installation, not specified herein, shall be equal in quality to the specified materials suitable for the intended use, and shall conform to the details and notes shown on the Plans. All minor items implied, usually included or required for the construction of a complete operating system, shall be installed whether specified or shown on the Plans, or not.

1.02 The Contractor shall furnish and install where shown on the Plans or stated herein, the following materials or equals:

PART 2 - PRODUCTS

2.01	Anchors, chemical adhesive	Stainless Steel HVA type by Hilti Co, or approved equal
2.02	Anchor bolts, eyebolts, nuts washers-steel, including anchor bolts and tie-rods carbon steel	ASTM A325-88a, hot-dip galvanized
2.03	Anchor bolts, nuts, washers and screws-stainless steel	AISI Type 316 stainless steel
2.04	Anchor straps	1-1/2-inch by 1/8-inch hot dip galvanized each with two ½-inch by 3-inch anchor bolts and nuts (galvanized)
2.05	Angle Meter Stops	Conform with AWWA C800, 85-5-5-5 Brass, Inle t Type K Copper Tube, Outlet Meter swivel nut, Lock Wing, NSF 61 Certified, Mueller 14255W, Ford KV23-W, or approved equal.
2.06	Angle Meter Stops	Conform with AWWA C800, 85-5-5-5 Brass, Inle t Inside Iron Pipe Thread, Outlet Meter swivel nut, Lock Wing, NSF 61 Certified, Mueller 14265W, Ford KV13-W, or approved equal.
2.07	Angle valves (for air release valve and flushing valve outlet)	2-inch threaded inlet and outlet valves with hand wheel, bronze body and composition disc, replaceable disc and seat, screwed-in bonnet Nibco T-311Y, or approved equal.

2.08	Backflow preventer	Pressure reducing 2-inch Series 909, manu-factured by Watts Regulator, Co. (or other MDWASD approved model for size and application)
2.09	Backflow preventer (hose)	3/4" bronze hose bibbs Watts No. 8
2.10	Ballast rock	Washed and graded limerock obtained from local sources. Aggregate size shall be 1-1/2 inch to 2-inches in diameter.
2.11	Banding straps for pipe skids	Hot-dip galvanized steel or stainless steel, 1/32-inch thick by 1-1/4 inch wide, minimum, with banding clamps of same material.
2.12	Bedding for copper tubing	Clean white masonry sand
2.13	Bentonite	Baroid Bentonite Mix as supplied by Southwest Florida Service and Supply, or Tony's Drilling Supply (Opa-Locka, FL).
2.14	Blind flanges, cast iron	AISI Standard B16.1, Class 125, plain-faced and drilled. “Hollow Back” flanges not acceptable.
2.15	Bolt, nuts and washers, Aluminum (where required on the Plans)	Aluminum bolts shall conform with AA 2024-T4 Alloy designation, anodized
2.16	Bolts and nuts for flanged pipe joints	Hot-dip galvanized steel, sized pipe joints per ANSI specifications. If in contact with aluminum or stainless steel, AISI Type 316 stainless steel, sized per ANSI specifications.
2.17	Bonding Agent for concrete	High polymer resin dispersed in water "Daraweld-C" by W. R. Grace Co.
2.18	Bore or bell donut adapters for tailpieces	Fernco, Inc.
2.19	Brackets and Pipe Support Clamps	ASTM A36, hot dip galvanized after fabrication
2.20	Branch Assembly (Meter)	Copper inlet with 2 meter swivel nut outlets, NSF 61 Certified, 85-5-5-5 brass, 7 ½- inch spacing between outlets, Mueller 15362, Ford UV23-42W, James Jones, A.Y. McDonalds 0802M or approved equal.
2.21	Caulking Compound	Hornflex-L (two component compound based on Thiokol polysulfide liquid polymers), W.R. Grace & Co. Apply per manufacturer's recommendation. See Metropolitan Dade County Public Works

2.22	Catch Basins	MDWASD Std. Detail SD 2.3, unless shown otherwise on Plans or detailed on specified herein.
2.23	Chain Rail	Chain shall be straight-link machine chain, Type 316L Stainless Steel with approx. 15 links per foot. Each chain section shall be fitted with Type 316L Stainless Steel snap fittings and eye bolt at both ends. Eye bolts shall be affixed to end posts.
2.24	Check valves in meter hook-ups	1-1/2 inch to 2-inch brass with neoprene poppet by Stataflo Products, Inc., or approved equal
2.25	Clean-Outs (toilet area)	Josam 58020, adjustable, with Nikaloy top, or approved equal.
2.26	Concrete louver ventilator blocks	16-inch by 16-inch with bird screen, Denmark's Artstone Co., Miami or approved equal.
2.27	Copper tube straps	Chase No. 1019, 1019R, 1019S. Copper straps for 1-inch tubing, Grinnel Fig. 9124
2.28	Concrete pipe support saddle liner	Neoprene rubber sheet, 1/4 inch thick w/ 4-ply fabric reinforcement durometer grade 70, cut width ½ inch less than saddle with.
2.29	Concrete protecting coating (interior of fuel tank containment top of bottom slab and interior walls from bottom slab up to 3-1/2 feet)	Base: Strongcote WB-114, 1/32-inch by Strongwall Systems Inc. or approved equal. Top: Strongcote SC-112, by 1/32-inch thick Strongway Systems, Inc. or approved equal.
2.30	Copper Tubing	ASTM Standard B-88, Type K annealed and coiled
2.31	Corporation Stops	1-inch Mueller H-15000 (for chlorination, testing and 1-inch service connection). 1-½ inch Mueller H-10003, (for air release assembly and 2-inch service connection).
2.32	Coupling Adapters	Flanged, cast iron, Type 912 by Rockwell International, or approved equal.
2.33	Coupling, Flexible (Groove type)	Cast iron Victaulic Style 31 or approved equal, complying with AWWA C606-87. Compatible with pipe material, dimensions and service, and furnished with neoprene gaskets and stainless steel bolts and nuts.

2.34	Coupling, Flexible	Vibration and noise insulating expansion joint, design pressure 150 psi, acceptable for drinking water shall be Style 110-A by Unaflex Rubber Corp., distributed by H.S. White Co., Inc., Ft. Lauderdale, or approved equal.
2.35	Coupling, No. Hub	Flexible PVC body conforming with ASTM D5926 and C1173. Stainless steel bands. Fernco or approved equal.
2.36	Coupling, Transition (Ductile Iron)	Center sleeve and end rings of ductile iron conform with ASTM A536 grade 65-45-12; Gaskets NBR (Sewage) SBR (Water). High strength low alloy steel bolting. Coupling conforms with AWWA C219.
2.37	Coupling, Transition (Steel)	Center Sleeve of ASTM A53 grade A steel. End rings of ASTM A795 steel. Gaskets of EPDM. Complies with NSF 61 and AWWA C219. Fusion bonded epoxy interior and exterior coating.
2.38	Disinfectant	As specified in Section UC-175, herein
2.39	Dowel Bars	Continuous threaded, w/ splicer, Type DBT by Richmond Screw Anchor Co.
2.40	Duct caps (Grab Sample Ports)	6" Bronze Andrew industrial Type "DC", Kamlock or equal with 6-inch NPT bronze adaptor Andrews Industrial Type "A", Kamlock, or approved equal.
2.41	Electronic Marker System	Separate frequency for Water, Sewer and Re-use. Any “approved equal” must be able to communicate with the markers called out below. Search and read mode range of five feet. Each ball to have a separate readable ID number. Ball diameter 4 to 6 inches or less. Filling of ball to be mixture of propylene glycol and water and shall be environmentally harmless if container is ruptured. Shell to be HDPE or other corrosion proof material and completely water tight. 3M 1400 series or approved equal.
2.42	Epoxy for polylining repairs	Two-part coal tar epoxy Madewell 1104 by Madewell Products Corp.

2.43	Epoxy grout, non-shrinking (for setting equipment)	See Specification Section 03600
2.44	Epoxy grout, non-shrinking (for setting handrails)	"Wall-Nu" (Trowel Mix), by Steelcote Mfg. available locally at Florida Wire and Rigging Works, Inc., "Five Star" by U.S. Grout Corp., or equal, available from Coastal Construction Products.
2.45	Exhaust fan (for dry wells)	See Specification Section 15860
2.46	Expansion anchors and shields	Redhead by ITT Phillips Drill Division or approved equal.
2.47	Fiberglass bar grating	Polyester I-beam, 1-1/2 inch bars for 24-inch span with uniform loading, spaced 1-3/16 inch O/C. Cross bars spaced 6-inch O/C. As manufactured by McNichols Fiberglass Co., or approved equal.
2.48	Fill Cap (emergency pump out connection to force main)	4", lock-type, OPW 634-TT with 4 x 4-inch adaptor, OPW 633-T, by Dover Corp., or equal.
2.49	Flange coupling adapters	Smith-Blair, Dresser.
2.50	Flanged joint material	ANSI sized and approved, full faced 1/8 inch thick neoprene (for sewer) SBR (for water) gaskets and hot-dip galvanized bolts and nuts (except as otherwise specified for a particular service). Properties of gaskets to conform with ANSI/AWWA C111/A221.11. Bolts and nuts hot dip galvanized steel properly sized for ANSI Standard Class 125 flanged joints.
2.51	Flexible couplings (Compression type, if required during installation).	Compression type sleeve Dresser Style 38, Baker, or equal, compatible with pipe dimensions and service, and furnished complete with grade 27 gaskets and 316 stainless steel bolts and nuts.
2.52	Flexible connections, (stainless steel)	Stainless steel bellows type with flanged connections as manufactured by Ram-Tech Sales, Inc., Shreveport, LA, or approved equal.
2.53	Floor drain with strainer 4-inch (if required)	Adjustable body 30604-64 Josam with adjustable Super-Flow strainer, Bronze Top finish.
2.54	Gasket lubricant	Vegetable soap lubricant as recommended by the pipe, valve or gasket manufacturer for

		installation of pipe in subaqueous trench.
2.55	Gauges - pump discharge	0-60 psi range, Kunkle, Style G1110, case type N or equivalent by John C. Ernst, or Ashccroft with diaphragm seal.
2.56	Gauges - pump suction	0-15 psi range, Kunkle, Style G1130, case type N with diaphragm seal, 4-1/2 inch dial size. Gauges shall be furnished by the manufacturer supplying the diaphram seals assembled as a unit.
2.57	Gauges - Seal water pump	Kunkle, Style G1110, Case Type N, or equivalent by John C. Ernst, 0-60 psi range, 3-1/2 inch face.
2.58	Gauge cock	Bronze gauge cock Crane No. 744 equivalent by Stockam.
2.59	Gravel for venturi, valve or other pit (where required on Plans or herein)	Gravel shall be locally obtained from a fresh water source, free of deleterious matter and graded from 3/4 to 2-1/2 inches in size.
2.60	Grout for sealing between pipe and wall	Non-shrink, hydraulic cement grout. "Waterplug" by Thoro System Products.
2.61	Grout for boring and jacking	Portland cement-sand mixture. Type I (for water) Type II (for sewer) Portland cement and sand fineness that 100 percent will pass a standard 40-mesh sieve. Grout shall not contain greater than one part sand to one part cement.
2.62	Guard Post for hydrants	Galvanized steel pipe, Sch. 40, concrete filled. See Std. Detail 4.5
2.63	Hose bibbs	3/4" bronze, w/vacuum breakers where required by S. Fla. Building Code, American Valve Co., Fig. 76
2.64	Hose Clamps	All stainless steel, worm-gear type, Nos. 30032, 300188, by Breeze Corp, Inc. Hex head Type 316 Stainless Steel Series “68" Hy-Gear by Ideal
2.65	Hose, sump pump	2-inch I.D. Buna-N, "Plant Master" No. 119B by Gates.
2.66	Insulation guide support	1/2-inch insulation protection shield shall be ITT Grinnel, Fig. 167, or approved equal.
2.67	Insulation roll support	Pipe covering protection saddle shall be ITT Grinnel, Fig. 164, or approved equal. 20- inch adjustable roller stand with base plate shall be

		ITT Grinnell, Fig. 274, or approved equal.
2.68	Meter Box for Water Service	Per MDWASD Standard Detail WS 2.10, by U.S. Precast , or approved equal
2.69	Meter Couplings	1-inch brass, NSF 61 Certified, Brass, straight, meter nut x pack joint or grip joint, Ford, Mueller or approved equal.
2.70	Meter Couplings	1-1/2 inch & 2-inch brass "Loc-Pak" by Ford Meter Box Co.
2.71	Neoprene pad (60 Durometer)	Neoprene Bearing Pad "Servicized" by W. R. Grace Co. Code No. 3340.
2.72	Neoprene (compressible pad)	Acmaseal by Acme Highway Products, Corp., Amherst, N.J.
2.73	Oils and Lubricants	Type, quality and quantity as recommended by manufacturer of machinery or equipment.
2.74	Paint - Zinc rich for galvanized items with minor damage (if approved by the Engineer)	Dry galve by Force Chemical Division, American Soldering and Flux Co.
2.75	Paint, for guard post and fire hydrant repairs if necessary	Neutralizer – 1 coat Sherwin Williams Galvanized iron primer, B50 WZ1. Finish paint - 2 coats Sherwin Williams Industrial Enamel OSHA yellow B54 Y 37
2.76	Paint, bituminous	Bitumastic No. 300M and Bitumastic No. 50, Kop-Coat Co.
2.77	Pea Rock	Local washed rock, 100% passing 1-inch mesh and retained on 1/4-inch mesh.
2.78	Pipe clamps	Hot-dipped galvanized steel.
2.79	Pipe straps (2-inch by 3/8-inch)	AISI Type 316 stainless steel with 3/8-inch diameter stainless steel bolts.
2.80	Pipe straps for Vent Pipe	Galvanized 2-inch No. 3039T19 by McMaster-Carr
2.81	Pipe supports (where required)	Aluminum Strut Channel 1 5/8-inch X 1 5/8-inch unistrut,
2.82	Pipe support (other types)	Fabricated as shown on the Plans, ASTM A36/A36M-90 steel, hot dip galvanized after fabrication.
2.83	Pipe Hanger, Clevis Type (where required)	Adjustable clevis, carbon steel, galvanized, ITT Grinnel Fig. 260.

2.84	Pipe Support, Rod Attachment (where required)	Forged Steel Clevis Type with pins. ITT Grinnell Fig. 299.
2.85	Polyethylene encasement material for main and line valves	Virgin polyethylene material for ductile iron conforming to ANSI/AWWA C-105/A21.5-88, Type I Class C, extruded tube formed with approved polyethylene adhesive tape. Shall be 0.008-inch (8-mil) thick minimum and conform with WASD Std. Detail A-9.
2.86	Polyethylene sheet for vapor barrier and for use with concrete anchors	.060-inch (6-mil), "Visqueen" by Ethyl Corp., or approved equal. (See Std. Detail GS 1.1)
2.87	Polysulfide Rubber Sealant	Hornflex-L by W.R. Grace and Co.
2.88	PVC double bell repair couplings, No-stop (sleeves)	ASTM Standard D3034 and Section UC-250.
2.89	PVC pipe and fittings (for sewer lines and service laterals)	See Specification Section Section UC-250.
2.90	PVC double bell transition couplings or adapters PSM SDR-35 PVC Sewer Pipe to ductile-iron or AWWA C900 CI-PVC Pressure Pipe	ASTM Standard D3034 and Section 15105-2.07, herein for fittings.
2.91	Riprap	Sand-cement in burlap sacks, well mixed, in the proportion of 5:1. The sacks shall absorb moisture to set-up in the position placed.
2.92	Roofing felt (miscellaneous)	Standard 30-pound asphalt impregnated felt, ASTM Standard D226-88.
2.93	Restrained Joint Connectors	“Megalug” or approved equal. (May only be used where shown on the Plans)
2.94	Sand for bedding - copper tubing	Clean white masonry sand.
2.95	Sand for Casing	Such fineness that 100% will pass a standard 4-mesh sieve.
2.96	Sealant for concrete joints	Dow Corning 888 Silicon Joint Sealant with 3/8-inch Dia. Expanded closed-cell polyethylene foam backer rod or approved equal.
2.97	Service Insulator Assembly	Nylon dielectric bushing with bronze coupling-female I.P. thread by flared copper Ford Meter Co, Inc.
2.98	Service Saddle – Double Strap	Conform with AWWA C800, NSF 61 Certified, Copper alloy 85-5-5-5 body per ASTM B62 & B584, Gasket Buna N, Straps of silicon bronze. Ford Meter Box Co. 202B, James Jones #J-979

		or approved equal.
2.99	Service Saddle – Single Strap	Conform with AWWA C800, NSF 61 Certified, Copper alloy 85-5-5-5 body per ASTM B62, Gasket Nitrile, Straps of silicon bronze. Mueller Co. H-10475 H-10480 or approved equal.
2.100	Service terminal fittings _ single	One inch lock wing style valve, drilled for wire sealing, Cat. No. KV23-444W Ford Meter Box Co. or Cat. No 14255, Mueller Co.
2.101	Service terminal fittings - dual	One-inch branch valve assembly, with standard 7½-inch spacing between outlet centers, drilled for wire sealing, Cat. No. UV23-42W Ford Meter Box Co. or one inch branch connection with standard 71/2-inch spacing between outlet centers Cat. No. H-15362, fitted with angle stops for 5/8-inch meters, drilled for wire sealing, Cat. No. H-14265, (3/4" Inlet) Mueller Co.
2.102	Solder, potable water copper tubing	ASTM B32-89 Alloy grade Sn 94 or Sn 95
2.103	Strainer	3/4-inch with screwed connections and 20 mesh 18-8 stainless steel straining element. Type SY-70, as manufactured by Cash Acme or approved equal.
2.104	Stainless steel screws for ladders	AISI Standard Type 316.
2.105	Stainless steel cable	AISI Type 316 wire rope.
2.106	Stainless steel repair clamps, with stainless steel bolts, PSM SDR-35 PVC sewer pipe to ductile-iron or AWWA C900 CI-PVC pressure pipe	Wide range, single or multiple panel, Style 3121 or 3122, Clow Corporation. Coat with bituminous paint after installation.
2.107	Street elbow (90 Degrees)	150 psi, galvanized, malleable iron, screwed, ANSI Standard B2.1 threaded (NPT).
2.108	Stop, Angle Meter	For type K copper inlet.
2.109	Stop, Corporation, 1-inch	For chlorination, testing and 1-inch service connection, AWWA taper thread inlet, copper service thread outlet (Type K copper tubing), 85-5-5-5 brass alloy, Mueller H-15000, Ford F-600 or approved equal.
2.110	Stop, Corporation, 1 ½ x 2-inch	For 2-inch services, ARV's, AWWA taper thread inlet, Iron Pipe Thread Outlet, 85-5-5-5 brass alloy, Muelle H-10003, Ford FB-800-6, or approved equal.
2.111	Stop, Curb, ¾-inch	For copper thread one side, inside iron pipe thread other side, 85-5-5-5 brass alloy, Mueller H-15175, Ford B21-333W or approved equal.

2.112	Stop, Curb, 1-inch	For inside iron pipe thread both sides, or flare copper 1 side and inside Iron Pipe Thread other side. 85-5-5-5 brass alloy, Mueller H-15175, Ford B21-444 (copper x iron pipe), Mueller H-10201, Ford B11-444 (inside iron pipe thread both sides) or approved equal.
2.113	Stop, Curb, 1 ½-inch	For inside iron pipe threads both sides, 85-5-5-5 brass alloy, Mueller H-10255, Ford B11-666, or approved equal.
2.114	Stop, Curb, 2-inch	For inside iron pipe threads both sides, 85-5-5-5 brass alloy, Mueller H-10255, Ford B11-666, or approved equal. Mueller H-10255, Ford B11-777 or approved equal.
2,115	Suction Bend	Cast iron, flange and flare, long radius 90-degree bend, US Pipe and Foundry Co.
2.116	Tread Plate	¼-Inch galvanized steel (raised checkered design)
2.117	Threaded rods	½-inch, 5/8-inch and 3/4-inch hot-dip galvanized steel.
2.118	Tie rods	Threaded each end, hot-dip galvanized steel, with galvanized nuts, washers and eye bolts. The eyebolts shall be Star National Products, Figure No. 7.
2.119	Timber skids and block	Wolmanized pressure-treated Southern Pine at 2.5 pounds per cubic foot retention. Skids and blocking shall be size so that the top of the bells or restrained joints of the carrier main will be two inches or less below the inside top of the casing pipe.
2.120	Turnbuckles	Grinnell Fig. 230, hot-dip galvanized
2.121	U-bolts (galvanized)	Hot-dip galvanized steel
2.122	U-bolts (stainless)	AISI Type 316 stainless steel.
2.123	Vent Cap	2-inch, OPW-63, by Dover Corp.
2.124	Valve (Foot)	1-inch, double poppet, bronze, OPW 92 by Dover Corp.
2.125	Valve boxes and covers	See Standard Details and Section 05550.
2.126	Wall pipes (cast iron)	Clow F-1400 series, American Cast Iron or equal, flange and flange or flange and plain end, or bolted mechanical joint, as required or as shown on the plans. Length to fit wall thickness.

2.127	Wall Sleeves for Pipe 4" and Smaller	Schedule 40, hot-dip galvanized steel pipe, cut flush with face of wall or floor and reamed.
2.128	Wall Sleeves for Pipe larger than 4-inches	Cast iron, sized as shown on the Plans, conforming to AWWA Standards, Class "D"pattern, with intermediate flange.
2.129	Water proofing system (where required by the Plans)	"Penecrete" cementitious water proofing system at joint and 2-inches of "Penetron" all around joint area, mixed and applied as required by the product manufacturer, International Coating Systems, Inc. - Danko Sales, Inc. (404)922-3351or approved equal.

Note: All metal underground piping for this project shall be encased in virgin polyethylene

2.130 CASTINGS (See Section 05550)

A. General:

1) Materials used in the manufacture of the castings shall conform to ASTM Standard A48, "Gray Iron Castings", for Class 30 iron. Manhole and valve box covers shall have a roadway or pedestrian type surface as required by location, machined mating surfaces and shall be non-rocking.
2) Unless otherwise specified, castings shall be as manufactured by U.S. Foundry and Manufacturing Corp., Neenah Foundry, or approved equal.

B. Valve Boxes and Covers:

Valve boxes and covers shall be MDWASD No. 52 or No. 53 in accordance with the Standard Details. Valve box covers shall be cast labeled with the letter "S". The foundry and country of origin shall be cast on the bottom of the covers.

C. Fill Cap Manhole:

Fill cap manhole shall be 12-inch, cast iron with rubber gasket, type OPW 104-A by Dover Corp., or approved equal.

PART 3 - EXECUTION (Not Used)

END OF SECTION

THIS PAGE LEFT INTENTIONALLY BLANK

SECTION 15070

JACKING AND BORING

PART 1 - GENERAL

1.01 SCOPE OF WORK

A. The Contractor shall furnish all labor, material, equipment, and appurtenances required to perform complete jacking and boring operation as shown on the Plans.

B. The work under this section consist of installing a steel casing pipe under the road, railway, etc., in a single bore and jack operation and installing the carrier main within the casing, complete.

C. All jacking and boring operations shall be performed in accordance with all requirements of the permitting agency or company having jurisdiction over the work area, and as approved by the OWNER.

1.02 RELATED SECTIONS

A. Section 15060 - Piping and Fittings

1.03 SUBMITTALS

A. The steel pipe shall be furnished with an Affidavit of Compliance certifying that the pipe and sleeves comply with the requirements herein and ASTM Standard A139-93a. No pipe described below or sleeve will be accepted until such Certificates have been submitted to and approved by the Engineer.

1.04 QUALITY ASSURANCE

A. All work performed within the respective railroad, Florida Department of Transportation (FDOT) or other governing agencies' right-of-ways shall comply with all requirements and conditions of the governing authority, permit requirements and all requirements and conditions of these specifications.

B. The Contractor shall perform his operation in accordance the State of Florida Department of Transportation's Utility Accommodation Guide, Exhibit H, Jacking and Boring Supplement, latest revision. Copies are available from FDOT.

C. The Contractor shall assume all jacking and boring responsibilities for its permittee while complying with all FDOT; railroad company and governing authority requirements having jurisdiction over their work. The OWNER reserves the right to enforce any and all requirements.

PART 2 - PRODUCTS

2.01 STEEL CASING

A. Steel casing pipe for boring and jacking shall be of the size and thickness as shown on the Plans. All steel pipe shall conform to the requirements of ASTM Standard A139-93a "Electric-Fusion (Arc)-Welded Steel Pipe (NPS 4 in. And Over)", Grade B.

B. Pipe weld shall be longitudinal, spiral weld not being acceptable. Where required by the permitting agency or company, the pipe and sleeves shall be coated inside and out with two coats of Bitumastic No. 50 as manufactured by Kop-Coat Company, Inc., or approved equal. Paint shall be applied in strict accordance with the manufacturer's recommendations.

C. The pipe shall have right-angle cut ends with bevel cut for field welding and shall be furnished in 20-foot lengths. Cutting the pipe in the field to accommodate the area for boring and jacking operations will not be permitted without specific approval by the Engineer of Record. The Contractor shall be responsible for determining the size of the pit in relation to the space required for this equipment and 20-foot lengths of steel pipe.

2.02 EQUIPMENT

The boring (tunneling) machine may be an open-faced boring machine. Other types of machines such as a closed face boring machine may be considered. Final approval of the boring machine is within the sole discretion of the Engineer of Record and must be obtained prior to its use. This is an absolute reservation of discretion on behalf of the OWNER due to the critical nature of the work to be performed beneath the railway roadway, etc. Excavation for installation of the casing by use of a labor crew will not be permitted.

PART 3 - EXECUTION

3.01 GENERAL

A. The installation shall be coordinated with the railroad companies, FDOT, or municipality in which the job is to be performed. The Contractor shall not begin work until he has received permission from the OWNER and the governing authority to do so. In the event the railroad companies or FDOT require payment for any services rendered, including services required due to around-the-clock construction, the costs shall be borne by the Contractor.

B. The Contractor must obtain approval by the Engineer of Record for the boring equipment he intends to use. His selection of boring machine must be based on his investigation of local conditions and written submission of his thorough investigation of the groundwater and sub-surface soil conditions to be encountered during the boring and jacking operations. This is particularly emphasized when running sand or large quantities of water are indicated. The Engineer of Record may require the Contractor to use a closed face boring machine if he considers it essential, based on information from the Contractor's report; and if, in his opinion, it is necessary to safeguard the public and to protect public or private property.

3.02 INSTALLATION

A. Installation of the casing pipe shall be a continuous operation until completed, unless revised by the Engineer of Record, FDOT, or other governing agencies having jurisdiction over the work.

B. Construction by boring and jacking shall be carried out in such a manner that there is no raising or settlement of the ground surface, surface facilities or structures. The casing shall be jacked from one end of the crossing to the other in conjunction with the boring. Material from the boring excavation shall be removed as the jacking proceeds.

C. The casing and carrier pipe shall be installed level and shall be free of horizontal and vertical deflections. A minimum of two monitoring holes located over the casing shall be provided to verify the casing location.

D. Adjacent lengths of steel casing pipe shall be welded together throughout the circumference of the pipe with two welding operations at the same time. All welding shall conform to the best accepted practices of the trade and in particular to AWWA Standard C206-88, "Field Welding of Steel Water Pipe Joints".

E. The Contractor shall furnish the Engineer of Record with five copies of his site surface and sub-surface (soil borings) examination data prior to starting work. The Engineer of Record and the governing authority (railroad company, FDOT, or similar authority) will analyze this information in conjunction with the equipment and methods specified hereinbelow to see if any changes are required. However, no changes will be permitted unless specifically authorized in writing by the Engineer of Record, and the governing authority.

F. Also, prior to commencing any work hereunder, preferably after a rainfall to indicate low areas by ponding, the Contractor shall take color photographs of the right-of-way over the entire area (length) of the proposed casing. These photographs shall be furnished to the Engineer of Record, who will review them with the Contractor, and representatives of the governing authority. Any pavement cracks, ground settlement ponding, or other unusual conditions indicated on the photographs will be recorded and acknowledged by all parties concerned, otherwise it will be agreed that the entire surface area is free of any pavement cracks, ground settlement or other unusual conditions.

G. Additionally, in conjunction with the photographs, the Contractor shall furnish the Engineer of Record with a survey prepared by a Registered Land Surveyor indicating elevations of the ground surface at twenty (20) foot intervals, minimum, over the full length of the proposed casings and 50 ft. beyond the casing on both sides. Elevations shall be to the nearest one hundredth of a foot. In addition the track elevations shall be taken 100 feet in both directions on the track from the center of the pipe. Elevation readings shall be taken both with and without the live load of a train. The Surveyor shall report the difference in elevations, if any, to the Contractor, who shall report such to the Engineer of Record. Upon completion of the Contract, but prior to acceptance by the OWNER, the Contractor shall furnish the OWNER with a second survey prepared by a Registered Land Surveyor as stated above. If any appreciable difference in elevations between the two surveys indicate settlement, or if pavement cracks or other surface irregularities are apparent, and correction is required by either the railroad company, FDOT or other governing authority, the Contractor shall

immediately correct such problems to their satisfaction, and to the satisfaction of the OWNER. If any appreciable differences in elevation, indicating settlement, occur or if pavement cracks or other surface irregularities become apparent within the period of the Maintenance Bond, and correction is required by either the railroad company, FDOT, or other governing authority, the Contractor shall immediately correct such problems to their satisfaction and to the satisfaction of the OWNER.

H. The Contractor shall be fully responsible for any damage which might occur to the roadway, railroad company's crossing and tracks or other facilities and shall repair or replace such damaged facilities and equipment at his expense and to the satisfaction of the OWNER the railroad company, the FDOT or other governing authority. No work shall commence hereunder until the Contractor has procured the insurance required by the OWNER, the railroad company, FDOT or other governing authority; and such insurance has been approved by the Engineer of Record, the railroad company, FDOT, and other governing authority, respectively.

3.03 JACKING AND RECEIVING PITS

A. The jack and bore pits shall be constructed with 4 sides of steel interlocking sheeting designed and sealed by a Professional Engineer registered in the State of Florida. It shall terminate a minimum of 3 ft. above the adjacent ground elevation.

B. A detailed shop drawing shall be prepared and submitted, to include the method of installing a circular hole 3/4 of an inch in diameter larger than the casing O.D. It shall be made to accommodate the casing and prevent infiltration of water.

C. Concrete (4,000 psi) and tremie shall be designed and sealed by a Professional Engineer registered in the State of Florida and shall be of sufficient thickness to withstand the uplift.

3.04 WATER DISPOSAL

A. Inflow of water must be limited to slight seepage of the jack and bore pit and limited water intrusion into the pit from the tunnel machine performing the excavation. Water from the pits shall be disposed of in such a manner as will not cause injury to public health, to public or private property, to the work completed or in progress, to the surface of the streets, or cause any interference with the use of the same by the public. The Contractor shall submit his proposed method of handling trench water and locations at which the water will be disposed of to the Department of Environmental Resources Management (DERM), governmental agencies having jurisdiction over this work and to the Engineer of Record for approval and shall not commence the excavation without written approval from the OWNER, DERM and other governing agencies.

B. When the invert elevation of the carrier pipe is less than 7 ft. below the finished elevation and the elevation of the water table is less than 2 ft. above the casing invert, the Engineer of Record will allow the jacking and receiving pits to be steel sheeted, shored, and tremied with concrete, and shall be continuously dewatered during the entire installation. The tremied concrete slab in the bottom of the pit shall be sufficient to provide a stable base for the boring machine. The concrete slab shall be removed when this work is completed.

C. When jacking casing under the railway, roadway, etc. the Contractor shall begin the boring and jacking by constructing the jacking and receiving pits as shown on the Plans and in accordance with the requirements of the permit and these Specifications. The Contractor shall exercise special care during the boring and jacking to prevent damage to any underground utilities, whether shown on the Plans or not.

D. The receiving pit must be installed and ready to receive the casing pipe prior to any jacking and boring work in the jacking pit.

E. The Contractor shall provide the necessary pumps, and other means necessary to keep the pits free of water. In addition, he shall also provide standby back-up pumps and equipment at the site to insure against pit flooding in the event of equipment failure. The Contractor shall be responsible for the disposal of the water.

F. The Contractor's proposed pit construction and dewatering plans shall be submitted to the Engineer of Record for approval prior to construction. These submissions must also meet the approval of the FDOT, DERM and all other regulatory agencies having jurisdiction over this work. <u>No work is to commence without the required approvals.</u>

G. Upon completion of the work, all sheeting, shoring, concrete, concrete tremie slab and other material shall be removed from the site. Excavations shall be backfilled and compacted and the surface restored to original condition.

3.05 INSTALLATION OF CASING PIPE

A. After the jacking and receiving pits have been prepared, and the boring (tunneling) machine is ready for operation, the casing pipe shall be installed. The installation of the casing pipe shall be a continuous around-the-clock operation, and once started shall not be stopped until the entire run of casing pipe has been installed.

B. The Contractor shall obtain all necessary permits required for the around-the-clock operation from the various agencies having jurisdiction over the work area unless the 24 hours-a-day operation is withheld. Additionally, the Contractor shall furnish and install temporary noise barriers around the pits as required to comply with noise ordinances of the various agencies having jurisdiction over the work area.

C. The casing pipe shall be furnished and installed in 20-foot lengths. Adjacent lengths of steel pipe shall be joined by welding. Welds shall be watertight. All welding shall conform to the best accepted practices of the trade and in particular to the AWWA Standard C206-88, "Field Welding of Steel Water Pipe". In order to minimize the welding time, the Contractor shall have at least two qualified welders and two welding machines on the job at all times. After the pipe has been lowered into the pit, it shall be welded to the pipe.

D. All welding done under this Project shall be performed by operators who are certified by a testing laboratory approved by the Dade County Building and Zoning Department as qualified to weld underhand and overhead. The Contractor shall furnish proof to the OWNER that his welders are so qualified.

E. The casing pipe shall have 2-inch tapped holes at 8-foot intervals at 3 and 9 o'clock locations prior to being placed in the pit; and at additional locations as may be required to control the placing of cement grout. The grout shall be pumped through one hole until it appears in the next hole, as soon as the auger is removed, in order to stabilize the soil over and around the casing and to prevent voids.

F. The pumping of the grout shall be carefully controlled with proper pressure to prevent floating of the casing and the pressure shall be such that all voids over and around the pipe are permanently filled in order to prevent settlement of the earth and facilities above the casing pipe. The holes in the pipe shall then be plugged with malleable iron pipe plugs.

G. The use of bentonite to install the casing pipe is at the discretion of the Contractor and is not a substitute for the cement grout. The installation of the casing pipe by boring and jacking shall be carried out in such a manner that there is no settlement of the ground surface or surface facilities or structures. Material from the boring excavation shall be removed as the jacking proceeds. The casing pipe shall be installed free of horizontal and vertical deflections unless required by design.

3.06 INSTALLATION OF CARRIER MAIN

A. When the installation of the casing pipe is complete, the Contractor shall install the carrier pipe. The carrier pipe may be jacked through the steel casing pipe or may be pulled through with a cable, but under no circumstance shall it be driven or struck. The method selected by the Contractor shall exert no tensile force on any joint in the pipeline.

B. The carrier pipe shall be held in alignment and supported on creosoted or Wolmanized timber skids (See Section 15065) or other OWNER approved casing spacer attached to the carrier pipe as shown on the Plans. The timber skids and blocking shall be sized so that the top of the bells or restrained joints of the carrier pipe will be two inches below the inside top of the casing pipe. See Miami-Dade Water and Sewer Department Standard Detail A 8.0. The OWNER may consider use of alternate casing insulator or spacer systems spaced at least 6 feet, utilizing polymer plastic, polyethylene or HDPE runners and requiring no special tools, grease, or pumping of grout or admixture in the annular space, each on a case by case basis.

C. After the installation of the carrier main within the casing pipe has been completed, the Contractor shall wash a sufficient quantity of clean sand into the space between the outside of the carrier main and the inside of the casing pipe to form a sand cushion that will come up to the springline of the main. The Contractor shall then plug the ends of the casing pipe as shown on the Plans.

D. The installation of the galvanized steel vent pipes for the casing pipe and the sign shall be complete as shown in detail on the Plans for the crossing.

3.07 STATE ROAD BORE AND JACK CROSSING

In addition to the Plans and the requirements of these Specifications, construction shall be in accordance with the requirements of the permits, along with their General Provisions and the following Special Provisions, unless otherwise modified:

B. Maintenance of traffic and all traffic control device shall be placed in accordance with the current edition of the FDOT Roadway and Traffic Design Standards.

C. The permittee shall coordinate the notification of any proposed lane closure(s) and temporary detour(s) at least two (2) weeks in advance of the closure date, by processing the required "anticipated roadway closure" form through the OWNER representative. Lane closures shall only occur during non peak hours or on non-event weekends. Peak hours are from 6:00 to 9:30 A.M. and from 3:30 to 7:00 P.M. weekdays. Where there exist conflict between the above statements and those contained in permits issued for the work, permitted conditions shall govern the work. The OWNER representative may adjust peak hours if conditions warrant.

D. Coordinate pre-construction meeting with FDOT, at least forty-eight (48) hours prior to commencement of work.

E. Before any work can commence on a State Road right-of-way, the permittee must furnish to the FDOT Inspector on the job site in writing the following:

1. The certification of the steel casing to be used.

2. The width, length and depth of the boring pit and receiving pit.

3. The de-watering plan and equipment to be used.

4. A subsurface report (addressing soil conditions and water table level in the vicinity of the jacking pit and the boring pit).

5. The name, address and telephone number of the contractor that will be performing the jack and bore.

F. Final restoration shall be coordinated with the OWNER representative all portions of the State Road right-of-way shall be restored within thirty (30) days upon completion of the permitted installation.

G. When the permittee's operations encounter or expose any abnormal condition which may indicate the presence of a hazardous waste, toxic waste, or contaminants, such operations shall cease immediately in the vicinity of the abnormal condition and the OWNER's inspector and Ms. Marjorie Bixby of FDOT's Environmental Management Office (telephone 470-5228) shall be notified. Every effort shall be made by the permittee to minimize the spread of any contamination into uncontaminated areas. Notification of personnel and selection of course of action shall be in accordance with procedure 650-0300 1 O-B, Resolution of Right-of-way Contamination Issues. Under no circumstances will the permittee resume operations in the affected area until so directed by the OWNER.

H. Beginning of any work within the right-of-way associated with this work constitutes acceptance of these conditions.

END OF SECTION

THIS PAGE LEFT INTENTIONALLY BLANK

SECTION 15075

PIPE BURSTING USING PRE-CHLORINATED PIPE

PART 1 - GENERAL

1.01 DESCRIPTION

A. The pipe bursting of potable water mains using pre-chlorinated pipe will repeat the method outlined below for each section of pipe being rehabilitated. These processes may be performed in series or in parallel with other sections of pipe within the job; however, each section shall require these steps. Pipe bursting shall not be allowed when host pipe is less than 4" nominal diameter. Pipes shall not be upsized by more than two pipe sizes.

1. Post notices of service outage at least 48 hours prior to work in accordance with Section 3.02 of this specification.

2. Chlorinate a length of product pipe per ANSI/AWWA C651-14 "Standard for Disinfecting Water Mains" that yields passing test results for potable water.

3. Hydrostatic test the product pipe section in accordance with AWWA C600-10.

4. Excavate a Burst Pit at one end of the section down to pipe grade for placement of the pipe bursting equipment.

5. Excavate an Insertion Pit at the opposite end of the section down to pipe grade for entry of the product pipe.

6. Excavate Service Connection Pits as needed based on the number of water services and meters for the section of pipe being replaced.

7. Isolate the section to be rehabilitated from the rest of the system so as to maintain pressure integrity of the system as well as to prevent any backflow of chlorinated solution or non-potable water into the system.

8. Excavate and remove hydrant tees and valve tees from the host pipe.

9. Rod string shall be assembled as it is thrust through the host pipe from Burst Pit to Insertion Pit.

10. Burst tooling and product pipe shall be attached to rod end at Entry Pit.

11. Rod string shall be pulled back and disassembled simultaneously while tooling and product pipe travels from Insertion Pit to Burst Pit.

12. Service connections shall be made to the newly installed main. Please note that this step in only intended for connecting to the new main, whether they are electrofusion type or mechanical saddles. Services shall not be reconnected to the user until the new main has been properly chlorinated and pressure tested in accordance with Sections 3.04 and 3.06. The pressure testing and laboratory testing should take place before Item 4.

13. Super-chlorinate new pipe for 15 minutes to 300 ppm. A de-chlorination unit will be used to neutralize the residual chorine when flushing. Flush the newly installed main with potable water. Chlorination shall be in accordance with 62-555.340, F.A.C.

14. Inspect for leaks at new connections and perform final pressure test.

15. Complete final connection of the replaced section of pipe to the system.

B. Items 4 through 15 shall be accomplished within a single 10-hour day to eliminate the need for temporary services. The length of pipe to be burst per run should be chosen to conform to this time frame.

1.02 RELATED SECTIONS

A. Section 01720 – Project Record Documents

B. Section 15080 – Horizontal Directional Drilling

C. Section 15070-Jacking and Boring

D. Section 15060 – Piping and Fittings

E. Section 15100 – Valves, General

1.03 REFERENCES

A. AWWA C600-10 Installation of Ductile-Iron Mains and Their Appurtenances

B. ANSI/AWWA C651-14 Standard for Disinfecting Water Mains

C. AWWA C906-15 Polyethylene (PE) Pressure Pipe and Fittings, 4-inch Through 65-inch for Waterworks

D. ASTM D3350 Standard Specification for PE Plastics Pipe and Fittings Materials

E. ASTM F585 Standard Guide for Insertion of Flexible PE Pipe Into Existing Sewers

F. ASTM F714 Standard Specification for PE Plastic Pipe (DR-PR) Based on Outside Diameter

1.04 QUALIFICATIONS

A. To assure quality execution of the pipe installation, the Contractor shall submit the following to the Owner:

1. Experience – The Contractor shall provide documented evidence of:

a. Being actively engaged in the installation of pipe using the static pipe bursting method for a minimum of 5 years. The work experience must have been performed under the current company name.

b. Performing 50,000 linear feet or more of water main replacement of cast iron, galvanized steel, and asbestos cement pipe using the process of pre-chlorinated pipe bursting in the United States of America within the past 5 years.

c. Experience must include static pipe bursting of 4" through 12" water main.

d. Submit project references of 5 similar projects successfully completed within the past 3 years within the State of Florida. References must accompany each project experience with detailed project descriptions and contact information.

2. Certification – The Contractor shall provide documented evidence of:

a. Certificate of training endorsed by the manufacturer of the pipe bursting equipment.

b. Certificate of training endorsed by the manufacturer of thermal fusion equipment in butt fusing of HDPE pipe.

c. Certificate of training endorsed by the supplier or manufacturer of HDPE electro-fusion couplers to be used in the method.

B. Provide hygiene competency statement by Contractor that all employees are medically cleared to work on restricted operations and have been trained in hygienic procedures.

C. Personnel overseeing the pre-chlorination process shall be trained and qualified in the process.

PART 2 - PRODUCTS

2.01 MATERIALS

A. High Density Polyethylene Pipe shall be AWWA C906 (HDPE).

B. Pipe must conform to ASTM F714 and NSF 61.

C. HDPE resin shall be PE4710 characterized by ASTM D3350.

D. All pipe shall be made of virgin material, no rework except that obtained from manufacturers own production.

E. Pipe shall be homogeneous throughout and free of visible cracks, holes, foreign material, blisters, or other faults.

F. Pipe shall be a minimum of SDR 11 wall thickness or as directed by the Owner.

G. Cuts or gouges, per ASTM F585 are acceptable up to 10% of wall thickness. Beyond 10% of wall, damage must be removed by cutting the damaged section from the pipe string and butt fusing the ends.

H. Stripe along the length of the pipe shall be of the color designated by the Owner to identify the applicable service (commonly a blue stripe for potable water).

I. All HDPE pipe shall be wrapped with tracer wire. For trenchless water main installations, 1/8" thick stainless steel tracer wire shall be used with an insulating jacket by Performance Wire and Cable, Inc. Insulating jacket shall be blue and shall read "POTABLE WATER" at a maximum interval of every two linear feet. Should the wire become damaged during installation, Contractor shall trench new cable to ensure a continuous wire for the pipe.

2.02 FITTINGS

A. Fittings for pressure systems shall be ductile iron with a minimum rating of 350 PSI or per the Owner's specification.

B. Stiffener inserts per ASTM 240 shall be used for all fittings and connections to HDPE pipe. Stiffeners shall be 304 Stainless Steel and be of wedge type design.

C. Service Connection Fittings shall be HDPE electro-fusion type and/or mechanical saddles with a minimum working pressure of 200 PSI or per the Owner's specification.

D. Connection Fittings shall meet AWWA C906 and meet or exceed the pressure requirements of the HDPE pipe.

2.03 COMPLIANCE

A. Certificate of compliance shall be supplied to the Owner that the pipe meets the requirements of Section 2.01.

B. All materials (in excess of those specified in 2.03A above) used with the coupling or connecting HDPE water main must be submitted for approval by the Owner.

2.04 HANDLING AND STORAGE

A. Pipe transport and handling shall be per Manufacturer's recommendation.

B. Pipe shall be stored on level ground, preferably turf or sand, free of sharp objects that could damage the pipe. Stacking of HDPE shall be limited to a height that will not cause deformation to the pipes. If ground conditions are not ideal, rollers or wooden supports shall be used and spaced adequately as to not allow deformation of the pipe between supports.

2.05 DOCUMENTATION AND PLANNING

A. Contractor shall submit a plan to the Owner on a marked up copy of the Project Drawings showing the Contractor's construction phasing and plans at the Pre-Construction Meeting. Plan details should include:

1. Pit locations for pipe insertion and bust machine location.

2. Pit locations for service re-connects.

3. Schedule of when various sections are to be rehabilitated.

4. Distances of each pull.

5. Isolating points used to seal the system during the pipe burst.

6. Chlorination/de-chlorination and pressure test logs for each pipe section.

B. The Project Construction drawings provided by the Owner shall be marked by the Contractor to show actual locations of services, fittings, fire hydrants, and other reconnects. These markups shall be done the day of the actual placement. A set of marked-up as-built plans shall be returned to the Owner within 15 days of substantial completion of job. Refer to Section 01720 of the specifications for record drawing requirements.

C. Chlorination Submission Documents – Pipes pre-chlorinated with intent to install under this specification must have a log sheet placed in a sealed waterproof envelope attached to the pipe at the start of the Chlorination process. This sheet makes up the Chlorination Submission Documents and shall be delivered to the Owner at the same time as the marked-up as-built construction drawing. The Owner or Owner's representative shall be present for all chlorination and pressure testing. Information on the log sheet shall at a minimum include:

1. Date of swabbing

2. Date of chlorinating and amount of chlorine used

3. Date of samplings

4. Results of sample tests

5. Date of pipe installation.

6. Date of pressure test

7. Makeup water details (if any)

8. End test pressure

9. Final pressure test results

10. Location of installation

PART 3 - EXECUTION

3.01 NOTIFICATION OF REGULATORY AGENCY

A. Prior to commencement of construction, the Contractor shall notify the Authority Having Jurisdiction (Miami-Dade Health Department) for their project review and oversight. Specifications for the construction process and/or plans shall be provided to the Authority as required.

3.02 INTERRUPTION OF SERVICE TO END USERS

A. Interruption of service to end users shall be minimized through the efforts of the Contractor and use of the method outlined herein. Outages shall be limited to 8:00 AM to 6:00 PM Monday through Friday. No interruption shall be permitted between 6:00 PM and 8:00 AM or on Saturday, Sunday, or legal holidays without the prior written approval of the Owner.

B. Only one line segment may be shut down for rehabilitation at any time.

C. End users shall be notified in writing (i.e. door hanger, flier, etc.) by the Contractor in a manner approved by the Owner. General notices shall be provided 7 calendar days in advance. Detailed notices shall be provided at a minimum permissible advance time of 48 hours prior to service interruption.

3.03 JOINING OF PIPE

A. Fusing per butt fusion methods in strict conformance to the pipe and/or fusing equipment manufacturers recommendations shall be used to join sections of HDPE.

B. Fusing of 'sticks' of pipe shall be performed in the general vicinity of the pipe insertion pit or staging area.

C. Pipe supplied by the pipe manufacturer in a coil may be fused remote from the pipe insertion pit.

D. Solvent cement joints performed by anyone other than the manufacturer is unacceptable for any HDPE pipe or fitting.

3.04 PRE-CHLORINATION OF PRODUCT PIPE

A. Chlorination of pipes prior to bursting shall be carried out per ANSI/AWWA C651-14 Standard for Disinfecting Water Mains. Owner or Owner's representative shall

be present for chlorination procedures. In general, the method includes the following:

1. Disinfect all equipment, tools, end caps, pipe fittings, or product that may contact pipe.

2. Disinfection shall be carried out by immersing or rinsing items in a hypochlorus solution containing 1 to 5 percent chlorine measured by weight. See details of chlorination solutions in Section 3.05.

3. Product pipe shall be fused into a string of sufficient length to complete the designated section or be coiled in a manner suitable for delivery on a pipe reel. Maximum allowable length to be fused and stored aboveground at one time shall be 1,200 feet.

4. The surface upon which the product pipe rests during chlorination shall be in accordance with Section 2.04. Coiled pipe must be laid horizontally to allow all air to be expelled.

5. Swabbing, chlorination, and testing of the inside diameter of the pipe shall be accomplished by:

    a. Swab being inserted at the lowest end of the pipe.

    b. Calcium hypochlorite tablets or granules as described in Section 3.05 shall be placed behind the swab.

    c. Pressure tight end cap shall be mounted to the low end of the pipe either by fusing or mechanical assembly to the pipe.

    d. Potable water shall be introduced through this end cap at a controlled rate such that the swab is propelled at a velocity less than or equal to one foot per second. All air is to be dispelled from the pipe.

    e. Upon discharge of the swab from the elevated end of the pipe, the elevated end shall be capped with a pressure tight seal. This seal shall have a tapped access hole of size at least 1.25" NPT or incorporate the ability to leak (purge) air or water at will by adjustment of clamping bolts. Additional potable water should be added after capping to ensure that no air remains between the caps.

    f. Pressure testing of the pipe section should be performed per Section 3.06 upon placement of the second end cap.

    g. Chlorinated solution should be maintained in the pipe for a minimum of 24 hours prior to flushing when water temperature is above 41°F (5°C), 48 hours when water temperature is 41°F (5°C) or less. Time for retention of the chlorinated solution shall not be more than 48 hours so as to prevent damage to the pipe, fittings, or end caps.

h. After designated holding time, the pipe shall be drained, flushed, and filled with potable water so as to expel the highly chlorinated solution. This shall be accomplished within 24 hours of chlorinating the pipe. The spent chlorinated solution shall not be allowed to enter any watershed, sanitary sewer, or any other area where environmental damage may occur without neutralizing it in an industry accepted manner. Flushing water shall be from a source known to be of drinking water standard.

i. Test samples shall be taken from each end of the pipe on consecutive days, at least 12 hours apart. Samples shall be tested by a state certified lab within 30 hours of being taken.

j. Acceptable test results shall be in accordance with Chapter 62-555.340 of the Florida Administrative Code. Failure of any sample to pass a bacteriological test shall result in the related section of pipe being re-flushed and retested. Should any sample again fail, the section must be chlorinated before retest. Contractor's log sheet shall be filled out with all pressure test results.

k. Time before connection of a passing pipe section and services shall be limited to 14 days from the last sampling. After this time, the pipe must be retested to be acceptable for use.

l. Drain the section of pipe prior to pipe bursting. The pipe shall be drained on the day of the pipe bursting and sealed after draining and for the pipe bursting process.

m. Swabs should be designated by the Manufacturer as suitable for potable water system use. Swabs are to be manufactured by Knapp Industries or be of equivalent design.

3.05 CHLORINATION SOLUTIONS

A. Acceptable forms of chlorine include calcium hypochlorite conforming to ANSI/AWWA B300, preferably in 5-gram tablets, alternately in granular form. Material must be stored per manufacturer's recommendations.

B. Unacceptable forms of chlorine include calcium hypochlorite intended for swimming pool use.

C. Calcium hypochlorite tablets shall be placed behind the swab in quantity based on pipe size and length per ANSI/AWWA C651-14 Standard for Disinfecting Water Mains.

D. Calcium hypochlorite in granular form shall be placed behind the swab in quantity based on pipe size and length per ANSI/AWWA C651-14.

E. Solutions acceptable for pipe chlorination shall be acceptable for disinfection of equipment, tools, end caps, pipe fittings, or product that may contact pipe.

F. Diluted chlorinated solutions over 7 calendar days old shall be disposed of properly and shall not be used as a disinfection agent.

3.06 HYDROSTATIC PRESSURE TESTING

A. Maximum allowable test pressure as referenced by PPI TR-31 shall be the higher of 1.5 times the pipe rated operating pressure at the lowest point in the section under test, 1.5 times the operating pressure of the lowest rated pressure component such as valves or fittings, or 150 PSI.

B. Air trapped in the product pipe must be purged before test.

C. At the discretion of the Owner, the test method used may be either a Monitored Make-up Water Test or a Non-monitored Make-up Water Test. Either test shall be performed above ground without fittings prior to pipe bursting. If damage during bursting occurs to the product pipe that requires a fused joint repair, the Owner may require re-test, with or without fittings after bursting. Owner or Owner's representative shall be present for all hydrostatic pressure testing.

D. Non-monitored Make-up Water Test shall be comprised of two stages:

1. Initial expansion and stabilization stage: The initial test pressure is applied, and the system is allowed to stand without make-up water during a 2-to-3-hour period. During this time, the pipe is allowed to expand and stabilize.

2. Test stage: After the stabilization is complete, the system is pumped back to test pressure and then reduced by 10 PSI. The pressure shall remain steady, not falling more than 5% from reduced pressure during a one-hour test period.

3. Total time allotted for test shall not exceed 8 hours. If successful test cannot be completed in this period, then the test section must be de-pressurized and allowed to relax for a minimum 8 hours before retesting.

E. Final pressure test shall be comprised of two stages. This test shall be performed after product pipe is installed, all taps have been made, and all fittings have been installed, but prior to connection to the main or services:

1. Initial expansion and stabilization stage: The test section is pumped to main's pressure and the system is allowed to stand without make-up water during a 1/2-hour period. During this time, the pipe is allowed to expand and stabilize.

2. Test stage: After stabilization is completed, the system is pumped back to main's pressure. All exposed taps shall be visually examined for leakage during the 15-minute duration of the test. Allowable pressure drop during test period shall not exceed 5 PSI. No visible leaks are allowable.

F. Contractor's log sheet shall be filled out with all pressure test results.

3.07 PIT LOCATION AND EXCAVATION

A. Burst pit and insertion pit locations shall be placed such that excavations are minimized. This may be accomplished by placing either or both of these pits at the point of a service connection.

B. Burst length shall be 400 feet (±50 feet) in length for the first 2 bursts. After soil pipe friction is evaluated, longer burst runs may be performed with approval from the Owner and the Engineer.

C. All pits shall be shored to ensure worker safety per OSHA and other local regulations.

D. All pits shall be secured and or covered when not active per OSHA and other local regulations to ensure public safety.

E. Traffic control shall be accommodated by Contractor as per the Contract specifications. Safe traffic passage around pit excavations that are located in or adjacent to streets or highways shall meet requirements of City Right-of-way Department. Parking of related employee vehicles, trucks, and auxiliary equipment shall be such that congestion and traffic delays are minimized. Contractor shall submit an MOT plan for approval by the Owner of the property or roadway prior to beginning work.

F. Utilities intersecting the host pipe shall be exposed using an excavation technique appropriate for the utility. This Utility Crossing Pit shall exist prior to commencement of bursting. Man entry shoring is not required however appropriate safety precautions should be made.

3.08 BURSTING MACHINE LOCATION AND SHORING

A. Bursting machines of the static pull style require preparation and planning for the bursting pit that they are to operate from.

B. Burst pits shall be shored in accordance with OSHA and other local regulations.

C. Forward face of the Burst Pit, or the surface that the machine bears against while pulling back, shall be shored in workmanlike manner. This shoring shall maintain perpendicular burst machine alignment to the pipe during pullback. Any loss of perpendicular alignment during pull shall require stopping of the bursting process and improvement of the forward face shoring.

D. Rearward shoring shall be provided to reach rod thrust forces during payout. While these forces are substantially lower than pullback forces, shoring must be used to stabilize the bursting machine so as to maintain perpendicular alignment of the machine during payout. The weight of the machine cannot be depended on to react to thrust forces. Host pipe at rear face of pit may only be utilized for rearward shoring if scheduled for replacement.

E. Pipe face for Cast Iron, Ductile Iron, or PVC shall be cut off using a saw or similar device to produce a square face for the bursting machine forward face to bear

against. Final separation of cast iron pipe with a wedge may provide a clean face. Host pipe shall be removed in sufficient length to accommodate burst machine.

F. Burst machine must be positioned so as to have rod centerline at approximate centerline of host pipe.

G. Rod Box delivery and removal between temporary rod storage location and Burst Pit shall be accommodated with appropriate lifting equipment and techniques. Additionally, movement and or placement of lifting machine shall be included in Traffic Control plans.

3.09 ROD PAYOUT OPERATION

A. Rod payout is the process of assembling a string of rods and pushing them in a step wise manner from Burst Pit, through the interior of the host pipe, to Insertion Pit.

B. Lifting of rod boxes into or out of the Burst Pit shall be performed per OSHA or other applicable requirements with respect to equipment and method.

C. Threads shall be cleaned of foreign matter before assembly.

D. Counting of Rods during payout, or quantity of rods per box shall be monitored such that the operator is aware of the distance between the burst machine and the lead end of the rod string.

E. Thrust force should be monitored by the operator. Should an unexpected sudden and significant increase in thrust force be experienced, the process shall be halted. The operator or Contractor shall review the results of Section 3.09E.1 with the Owner to remedy per Section 3.09E.2 in an attempt to determine if offsets, valves or other features or obstruction exist that may cause the rod string to leave the pipe.

1. Front end of the rod string should be located by distance from the Burst Pit. Location should be painted and compared to as built plans.

2. Appropriate action should be taken to remedy the cause. This action may include excavation of an additional pit at the obstruction to determine the cause, and removal or accommodation of the obstruction. The decision may be to continue thrusting if the obstruction is believed to be encrustation.

F. Host pipe in the Insertion Pit shall be cut or broken prior to arrival of the rod string. Sufficient length shall be removed so as to allow the Burst Tooling to enter the host pipe and bend the product within the allowable radius specified by the pipe manufacturer. The second end of the host pipe in the Insertion Pit shall be positioned or worked so as not to damage the product pipe as it travels through the Insertion Pit.

G. Workers shall not enter the Insertion Pit when the rod string is nearing the Pit. A Worker shall be in visual or radio contact with the burst machine operator so as to have the payout halted in a position that allows attachment of the Burst tooling. Burst tooling style shall be chosen based on anticipated properties of host pipe and host pipe repairs.

1. Cast Iron or Asbestos Concrete host pipe anticipated to be free of either Ductile Iron repair sections or Dresser Style Couplings may use a simple conical burst head with a single or double longitudinal blade.

2. Ductile Iron, PVC, or host pipe with Ductile Iron repair sections or Dresser Style Couplings require use of a rolling blade cutter (slitter) ahead of the conical expander.

3.10 TOOLING AND ATTACHMENT

A. The Product Pipe shall be moved into position for attachment to the rod string. Appropriate traffic or pedestrian control will be exercised along the path of the Product Pipe.

B. The lead and second rod shall be painted orange or yellow so as to give notice to the burst machine operator position of the Burst Tooling.

C. Attachment of the Burst Tooling to the rod shall be through the use of a removable pin joint allowing the tooling to pivot at least 46 degrees to the rod axis.

D. Burst head diameter must be a minimum of 15% over size to the outside diameter of the Product Pipe. Actual size is left to the discretion of the Contractor. A greater outside diameter allows for reduced pipe friction and increases bursting forces pushed and increases solid pipe placement.

E. Attachment of the Product pipe to the Burst Tooling shall be with a swivel that permits rotation to relieve torsional (twist) stress on the Product pipe.

F. Burst Head shall slide on the rod string such that the rear of the burst head overlaps the forward end of the Product Pipe to eliminate the chance of damage to the Product Pipe.

3.11 PULLBACK OPERATION

A. Prior to commencement of pullback, there will be visual or radio contact between observers stationed adjacent to the Insertion Pit, the Burst Machine operator, and a Product Pipe Observer stationed strategically along the length of the product pipe to watch for product pipe entanglement with above ground obstructions.

B. The Burst Machine operator will begin the pullback with the approval of the Insertion Pit Observer. Progress will be made at a slow rate until the Observer sees the Burst Tooling has completely entered the Host Pipe.

C. Pipe progress will be monitored for the first 20 feet of pullback by the Insertion Pit Observer and the Product Pipe Observer.

D. As the Burst Tooling nears any Utility Crossing Pit, an observer in radio or visual contact with the Burst Machine Operator will monitor and control movement of the Burst Tooling past the utility.

E. Should the forward shoring upon which the bursting machine bears yield sufficiently to bring the Bursting Machine out of square to the host pipe, the shoring will be reworked according to Section 3.08C.

3.12 TOOLING REMOVAL

A. Burst Machine Operator shall note rod count and anticipate entry of painted rods into the Burst Pit. As the Pin Joint Connection nears the Burst Machine forward face, the burst is to be halted. Load on the forward face is relieved by reversing the rod direction slightly.

B. The Burst Machine Shore Plate is to be removed, allowing the tooling to enter a cage or the hull of the Burst Machine. The tooling string will be disassembled and removed, in sections if necessary, until the Product Pipe face has been pulled beyond the face of the Burst Pit. The distance past the face of the Burst Pit shall be at the discretion of the Contractor anticipating the length required for connection and fusing.

3.13 PIT CONDITION PRIOR TO TAPS OR JOINING SYSTEM

A. Maintaining sanitary conditions within the product pipe after pipe bursting must take high priority. Should any foreign matter, including ground water be allowed to enter the pipe interior, the condition of the pipe is no longer suitable for connection to the system. For this reason, connections may not be made in standing water. Such water must be pumped or bailed prior to making the connection or unsealing the pipe. Areas under connections should be excavated below the pipe invert.

B. Before joining a surface and before any special surface preparation to accommodate that joining, external surfaces shall be clean and dry. Dust may be removed by wiping with clean, lint free cloth. Heavier deposits must be washed from the surface with soap and water and dried with a clean, lint free cloth.

C. Incidental exposure of the interior of the pipe to any foreign matter shall require that one of the two following remedies be carried out:

1. Complete chlorination per AWWA specifications for buried pipe.

2. Localized contamination at the end of the pipe may be removed and the contaminated interior surface of the pipe wiped with a solution of 1% to 5% hypochlorite disinfecting solution.

3.14 SERVICE TAPS AND SERVICE LINES

A. All existing service lines shall be replaced with new HDPE service tubing and must conform to AWWA C906.

B. All existing service taps shall be replaced with new service taps and shall be electro-fusion type and/or mechanical saddles conforming to the Contract specifications. Construction of taps shall be per the manufacturer's recommendation.

C. 3 inch diameter PVC sleeves, Schedule 40, shall be installed for all long-side new services, extending 2 feet beyond the edge of pavement. Sleeves shall be installed via missile boring and at a depth of 36" below land surface. The new service tubing shall be installed inside of the sleeves. New service tubing shall be jetted under sidewalks wherever possible to avoid cutting sidewalks. If the main or the meter is within that 2 feet limit, the sleeve would be terminated one foot from the corporation valve and/or the meter box.

3.15 POST-CHLORINATION

A. The section of main will be super-chlorinated to 300 ppm by inserting a swab at one end. The swab shall travel the entire length of the pipe section.

3.16 SERVICE REINSTATEMENT

A. Prior to connection of the newly installed pipe, the section of pipe shall be fully flushed with the use of a de-chlorination unit and ascorbic acid to neutralize the residual chlorine. Following flushing, the newly installed section may be connected to the main at both ends and service reinstated.

3.17 BACKFILL AND SURFACE RESTORATION

A. Backfill, lawn, asphalt, concrete, or other roadway surface restorations used to restore pits shall be per the Contract specifications.

3.18 DOCUMENT FINALIZATION

A. Within 15 days of completion of the job, all records including manifests, marked up construction plans, or documents pertinent to describing the system as installed shall be provided to the Owner and to the Engineer.

END OF SECTION

SECTION 15080

HORIZONTAL DIRECTIONAL DRILLING

PART 1 - GENERAL

1.01 SCOPE OF WORK

A. The work specified in this section consists of furnishing and installing underground utilities using the horizontal directional drilling method of installation, also commonly referred to as directional boring or guided horizontal boring. This work shall include all services, equipment, materials, and labor for the complete and proper installation, testing, restoration of underground utilities and environmental protection and restoration.

1.02 RELATED SECTIONS

A. Section 15060 - Piping and Fittings
B. Section 15070 - Jacking and Boring
C. Section 15075- Pipe Bursting using Pre-chlorinated Pipe

1.03 SUBMITTALS

A. The Contractor shall furnish the Engineer of Record with five copies of his site surface and sub-surface (soil borings) examination data prior to starting work. The Engineer of Record and the governing authority will analyze this information in conjunction with the equipment and methods specified below to see if any changes are required. However, no changes will be permitted unless specifically authorized in writing by the Engineer of Record and the governing authority.

B. Work Plan: Prior to beginning work, the Contractor must submit to the Engineer of Record a work plan detailing the procedure and schedule to be used to execute the project. The work plan should include a description of all equipment to be used, down-hole tools, a list of personnel and their qualifications and experience (including back-up personnel in the event that an individual is unavailable), list of subcontractors, a schedule of work activity, a safety plan (including MSDS of any potentially hazardous substances to be used), traffic control plan (if applicable), an environmental protection plan and contingency plans for possible problems. Work plan should be comprehensive, realistic and based on actual working conditions for this particular project. Plan should document the thoughtful planning required to successfully complete the project.

C. Equipment: Contractor shall submit specifications on directional drilling equipment. Equipment shall include but not be limited to: drilling rig, mud system, mud motors (if applicable), down-hole tools, guidance system, rig safety systems. Calibration records for guidance equipment shall be included. Specifications for any drilling fluid additives that Contractor intends to use or might use shall be submitted.

D. Material: Specifications on material to be used shall be submitted to Engineer of Record. Material shall include the pipe, fittings and any other item which is to be an installed component of the project.

E. The Contractor shall furnish the Engineer of Record with copies of his site surface and sub-surface (soil borings) examination data prior to starting work. The Engineer of Record will analyze this information in conjunction with the equipment and methods specified below to see if any changes are required. However, no changes will be permitted unless specifically authorized in writing by the Engineer of Record.

F. The Contractor shall perform directional drilling in accordance with an approved drilling method. The drilling method and sequencing of the drill shall be submitted by the Contractor at the scheduled pre-construction meeting. The Contractor shall also submit, for approval, the proposed layout drawing, drilling method, along with his proposed crossing(s) configuration, including entry and exit angles, radius of curvature, and entry and exit points.

1.04 QUALITY ASSURANCE

A. All work performed within the right-of-ways of Florida Department of Transportation (FDOT), South Florida Water Management District, railroad company or other governing agencies' right-of-ways shall comply with all requirements and conditions of the governing authority, permit requirements and all requirements and conditions of these specifications.

B. The requirements set forth in this document specify a wide range of procedural precautions necessary to insure that the very basic, essential aspects of a proper directional bore installation are adequately controlled. Strict adherence shall be required under specifically covered conditions outlined in this specification. Adherence to the specifications contained herein, or the Engineer of Record's approval of any aspect of any directional bore operation covered by this specification, shall in no way relieve the Contractor of their ultimate responsibility for the satisfactory completion of the work authorized under the project.

C. The Contractor shall haul, string, weld, coat field joints and hydrostatically test the pipeline sections. X-ray services shall be provided for all welds. The Contractor shall provide adequate security and shall be responsible for the integrity of the pipe section until after the pullback and final test of the pipeline.

D. The Contractor shall assume all responsibilities for its permittee while complying with all FDOT; railroad company, where applicable, and governing authority requirements having jurisdiction over their work. The OWNER reserves the right to enforce any and all requirements.

PART 2 - PRODUCTS

2.01 GENERAL EQUIPMENT

A. The directional drilling equipment shall consist of a directional drilling rig of sufficient capacity to perform the bore and pullback the pipe, a drilling fluid mixing, delivery and recovery system of sufficient capacity to successfully complete the crossing, a drilling fluid recycling system to remove solids from the drilling fluid so that the fluid can be re-used, a guidance system to accurately guide boring operations, a vacuum truck of sufficient capacity to handle the drilling fluid volume, trained and competent personnel to operate the system. All equipment shall be in good, safe operating condition with sufficient supplies, materials and spare parts on hand

to maintain the system in good working order for the duration of this project.

2.02 DRILLING SYSTEM

A. Drilling Rig: The directional drilling machine shall consist of a hydraulically powered system to rotate, push and pull hollow drill pipe into the ground at a variable angle while delivering a pressurized fluid mixture to a guidable drill (bore) head. The machine shall be anchored to the ground to withstand the pulling, pushing and rotating pressure required to complete the crossing. The hydraulic power system shall be self-contained with sufficient pressure and volume to power drilling operations. Hydraulic system shall be free of leaks. Rig shall have a system to monitor and record maximum pull-back pressure during pull-back operations. The rig shall be grounded during drilling and pull-back operations. There shall be a system to detect electrical current from the drill string and an audible alarm which automatically sounds when an electrical current is detected.

B. Drill Head: The drill head shall be steerable by changing it's rotation and shall provide the necessary cuffing surfaces and drilling fluid jets.

C. Mud Motors (if required): Mud motors shall be of adequate power to turn the required drilling tools.

D. Drill Pipe: Shall be constructed of high quality 4130 seamless tubing, grade D or better, with threaded box and pins. Tool joints should be hardened to 32-36 RC.

2.03 GUIDANCE SYSTEM

A. A Magnetic Guidance System (MGS) or proven gyroscopic system shall be used to provide a continuous and accurate determination of the location of the drill head during the drilling operation. The guidance shall be capable of tracking at all depths up to one hundred feet and in any soil condition, including hard rock. It shall enable the driller to guide the drill head by providing immediate information on the tool face, azimuth (horizontal direction), and inclination (vertical direction). The guidance system shall be accurate to $\pm$ 2 percent of the vertical depth of the borehole at sensing position at depths up to one hundred feet and accurate within 1.5 meters horizontally.

B. The Guidance System shall be of a proven type and shall be operated by personnel trained and experienced with this system. The Operator shall be aware of any magnetic anomalies on the surface of the drill path and shall consider such influences in the operation of the guidance system if using a magnetic system.

2.04 DRILLING FLUID (MUD) SYSTEM

A. Mixing System: A self-contained, closed, drilling fluid mixing system shall be of sufficient size to mix and deliver drilling fluid. Mixing system shall continually agitate the drilling fluid during drilling operations.

B. Drilling Fluids: Drilling fluid shall be composed of clean water and appropriate clay additives. Water shall be from an authorized source with a pH of 8.5 - 10. Water of a lower pH or with excessive calcium shall be treated with the appropriate amount of sodium carbonate or equal.

The water and additives shall be mixed thoroughly and be absent of any clumps or clods. No potentially hazardous material may be used in drilling fluid.

C. Delivery System: The mud pumping system shall have adequate capacity of required throughout the project and be capable of delivering the drilling fluid at a constant pressure. The delivery system shall have filters in-line to prevent solids from being pumped into the drill pipe. Connections between the pump and drill pipe shall be relatively leak-free. Used drilling fluid and drilling fluid spilled during drilling operations shall be contained and conveyed to the drilling fluid recycling system. A berm, minimum of 12 inches high, shall be maintained around drill rigs, drilling fluid mixing system, entry and exit pits and drilling fluid recycling system to prevent spills into the surrounding environment. Pumps and or vacuum truck(s) of sufficient size shall be in place to convey excess drilling fluid from containment areas to storage and recycling facilities.

D. Drilling Fluid Recycling System: The drilling fluid recycling system shall separate sand, dirt and other solids from the drilling fluid to render the drilling fluid re-usable. Spoils separated from the drilling fluid shall be stockpiled for later use or disposal.

2.05 OTHER EQUIPMENT

A. Pipe Rollers: Pipe rollers shall be of sufficient size to fully support the weight of the pipe while being hydro-tested and during pull-back operations. Sufficient number of rollers shall used to prevent excess sagging of pipe.

B. Pipe Rammers: Hydraulic or pneumatic pipe rammers may only be used if necessary and with the authorization of Engineer.

C. Restrictions: Other devices or utility placement systems for providing horizontal thrust other than those previously defined in the preceding sections shall not be used unless approved by the Engineer prior to commencement of the work. Consideration for approval will be made on an individual basis for each specified location. The proposed device or system will be evaluated prior to approval or rejection on its potential ability to complete the utility placement satisfactorily without undue stoppage and to maintain line and grade within the tolerances prescribed by the particular conditions of the project.

2.06 PIPE AND FITTINGS - HIGH DENSITY POLYETHYLENE (HDPE)

A. High density polyethylene (HDPE) pipe used in directional drilling shall be as specified herein.

B. Smooth wall high density polyethylene (HDPE) liner pipe shall be a Type III, Class C, Category 5, Grade P 34; PE 3408; as defined in ASTM D1248. Minimum cell classification, as given by ASTM 3350, shall be PE 335434C. Pipe shall meet the standards of ASTM F714, as modified herein, including the "Governmental/Military Procurement" sections. Minimum hydrostatic design basis shall be 1600 psi. In all cases, hydrostatic design basis and pressure rating shall be as determined using the methods of ASTM F714. Pipe of this type shall be butt-fusion welded at joints. All welding of joints shall be in strict conformity with the recommendations of the pipe manufacturer and performed by a firm or individual recommended in writing by the manufacturer.

C. As a part of the shop drawing submittals, the Contractor shall furnish, sign by a Florida

Registered Engineer, all calculations to determined, the pipe thickness, SDR rating, allowable stresses, in accordance with ASME B31.8, Table A842.22 and recommended coating, as required by the manufacturer.

PART 3 - EXECUTION

3.01 GENERAL

A. The installation shall be coordinated with the railroad companies, FDOT, municipality in which the job is to be performed, Florida Department of Transportation (FDOT), Florida Department of Environmental Protection (FDEP), Dade County Department of Environmental Resources Management (DERM), Army Corps of Engineers or agency having jurisdiction over the work. The Contractor shall not begin work until he has received permission from the OWNER and the governing authority to do so. In the event railroad companies, FDOT or governing agency require payment for any services rendered, including services required due to around-the-clock construction, the costs shall be borne by the Contractor.

B. The Contractor shall obtain all necessary permits required for around-the clock operation from the various agencies having jurisdiction over the work area, if he intends to schedule work as such. Additionally, the Contractor shall furnish and install temporary noise barriers as required to comply with noise ordinances of the various agencies having jurisdiction over the work area.

3.02 PERSONNEL REQUIREMENTS

A. All personnel shall be fully trained in their respective duties as part of the directional drilling crew and in safety. Each person must have at least 3 years directional drilling experience. A responsible representative who is thoroughly familiar with the equipment and type work to be performed, must be in direct charge and control of the operation at all times. In all cases the supervisor must be continually present at the job site during the actual Directional Bore operation. The Contractor shall have a sufficient number of competent workers on the job at all times to insure the Directional Bore is made in a timely and satisfactory manner.

3.03 DRILLING PROCEDURE

A. Site Preparation: Prior to any alterations to work-site, Contractor shall photograph or video tape entire work area, including entry and exit points. One copy of which shall be given to Engineer of Record and one copy to remain with shall for a period of one year following the completion of the project.

1. Work site as indicated on drawings, within right-of-way, shall be graded or filled to provide a level working area. No alterations beyond what is required for operations are to be made. Contractor shall confine all activities to designated work areas.

B. Drill Path Survey: Entire drill path shall be accurately surveyed with entry and exit stakes placed in the appropriate locations within the areas indicated on drawings. If Contractor is using a magnetic guidance system, drill path shall be surveyed for any surface magnetic variations or anomalies.

C. Environmental Protection: Contractor shall place silt fence between all drilling operations and any drainage, wetland, waterway or other area designated for such protection by contract documents, state, federal and local regulations. Additional environmental protection necessary to contain any hydraulic or drilling fluid spills shall be put in place, including berms, liners, turbidity curtains and other measures. Contractor shall adhere to all applicable environmental regulations. Fuel may not be stored in bulk containers within 200 feet of any water-body or wetland.

D. Safety: Contractor shall adhere to all applicable state, federal and local safety regulations and all operations shall be conducted in a safe manner. Safety meetings shall be conducted at least weekly with a written record of attendance and topic submitted to Engineer of Record.

E. Pipe: Pipe shall be welded/fused together in one length, if space permits, with welds X-rayed prior to being placed in bore hole. Pipe shall be placed on pipe rollers before pulling into bore hole with rollers spaced close enough to prevent excessive sagging of pipe.

F. Pilot Hole: Pilot hole shall be drilled on bore path with no deviations greater than 5 percent of depth over a length of 100 feet. In the event that pilot does deviate from bore path more than 5 percent of depth in 100 feet, Contractor shall notify Engineer and Engineer may require Contractor to pull-back and re-drill from the location along bore path before the deviation.

1. In the event that a drilling fluid fracture, inadvertent returns or returns loss occurs during pilot hole drilling operations, Contractor shall cease drilling, wait at least 30 minutes, inject a quantity of drilling fluid with a viscosity exceeding 120 seconds as measured by a March funnel and then wait another 30 minutes. If mud fracture or returns loss continues, Contractor shall cease operations and notify Engineer. Engineer and Contractor will discuss additional options and work will then proceed accordingly.

G. Reaming: Upon successful completion of pilot hole, Contractor shall ream bore hole to a minimum of 25% greater than outside diameter of pipe using the appropriate tools. Contractor shall not attempt to ream at one time more than the drilling equipment and mud system are designed to safely handle.

H. Pull-Back: After successfully reaming bore hole to the required diameter, Contractor shall pull the pipe through the bore hole. In front of the pipe will be a swivel and reamer to compact bore hole walls. Once pull-back operations have commenced, operations must continue without interruption until pipe is completely pulled into bore hole. During pull-back operations Contractor shall not apply more than the maximum safe pipe pull pressure at any time.

1. In the event that pipe becomes stuck, Contractor shall cease pulling operations to allow any potential hydro-lock to subside and shall commence pulling operations. If pipe remains stuck, Contractor shall notify Engineer of Record. The Engineer of Record and Contractor will discuss options and then work will proceed accordingly.
2. The bore pipe will be pulled back in one continuous section and the Contractor must utilize a swivel to minimize the rotation of the product pipe during pull back. The Engineer of Record shall have access at all times to any measuring or gauging devices used for horizontal drill as well as any drilling logs maintained by the Contractor.

3.04 DAMAGED OR IMPROPERLY INSTALLED PIPE

A. If the pipe or protective coating is damaged before installation or does not meet the specifications it shall be replaced at no expense to the Owner. If the pipe is damaged during installation by the Contractor's operations, is placed at the improper grade or line or cannot be advanced because of an unseen obstruction or any other reason, it shall be abandoned in place, and filled with concrete. After abandoning a pipe, an alternate installation shall be made, as directed by the Engineer of Record. With the exception of pipe that has to be abandoned in place due to unseen obstructions, the cost for abandonment of pipe shall be at the expense of the Contractor. No additional payment shall be made for the pipe which is abandoned, including dewatering, excavation, drilling etc.

3.05 PIPE TESTING

A. The Contractor will hydrostatically test the pipe after pullback to ensure its integrity, according to testing specifications. A calibrated pressure recorder shall be used to record the pressure during the test period. This record shall be presented to the Engineer of Record and made available to the OWNER. The Contractor will supply portable mud tanks or construct temporary mud pits to contain excess drill fluids during construction. Upon completion of the work, the Contractor shall legally dispose of any drill cuttings and excess drill fluids in accordance with DERM regulations. The Contractor shall provide as-built drawings reflecting actual installation.

3.06 SITE RESTORATION

A. Following drilling operations, Contractor shall de-mobilize equipment and restore the work-site to original condition. All excavations shall be backfilled and compacted to 95% of original density. Landscaping shall be subcontracted to a local professional landscaping company.

B. In the event that the Contractor must abandon a drill hole before completion of the crossing, the Contractor will seal the bore hole and redrill the crossing at no additional cost to the OWNER.

C. In the event that the pipeline becomes lodged and cannot be pulled out of the drilled hole during the installation, the Contractor shall seal the pipe and existing hole. The Contractor shall redrill a pilot hole and again commence the pulling of the pipeline. Cost of the pipe and its welding to replace the portion of the pipe not retrieved shall be borne by the Contractor.

3.07 RECORD KEEPING, AS-BUILTS

Contractor shall maintain a daily project log of drilling operations and a guidance system log with a copy given to Engineer of Record at completion of project. The Contractor shall provide as-built drawings of the completed operation and certified as to accuracy by the Contractor.

END OF SECTION

SECTION 15100

VALVES, GENERAL

PART 1 - GENERAL

1.01 SCOPE

A. The Contractor shall provide all tools, supplies, materials, equipment, and labor necessary for furnishing, installing, adjusting, and testing of all valves and appurtenant work, complete and operable. For buried valves, the Contractor shall furnish and install valve boxes to grade, with covers, extensions, and position indicators.

B. The provisions of this Section shall apply to all valves and valve operators called out in the various Sections of these Specifications except where otherwise specified. Valves and operators in particular locations may require a combination of units, sensors, limit switches, and controls specified in other sections of these Specifications.

C. All valves specified herein shall be furnished with an affidavit from the manufacturer(s) certifying that the valves furnished comply with the applicable provisions of the AWWA specifications, as modified herein. That they were factory tested in accordance with the AWWA Standard Leakage and Hydrostatic Tests as modified herein, with a certified test report furnished to the OWNER for each valve.

1.02 RELATED WORK SPECIFIED ELSEWHERE

A. Piping, General

B. Painting

C. Equipment General Provisions

D. Electrical

E. Valve (by type) Specification Sections

1.03 REFERENCE SPECIFICATIONS, CODES, AND STANDARDS

A. Codes: All codes, as referenced herein, are specified in Section entitled "Reference Standards." As used herein, "ANSI" denotes the American National Standards Institute; "AWWA", the American Water Works Association; and "ASTM", the American Society for Testing and Materials.

B. Commercial Standards:

ANSI B16.1	Cast Iron Pipe Flanges and Flanged Fittings, Class 25, 125, 250, and 800.

ANSI B16.5	Pipe Flanges and Flanged Fittings, Steel Nickel Alloy and Other Special Alloys.
ANSI/ASME B1.20.1	General Purpose Pipe Threads (Inch).
ANSI/ASME B31.1	Power Piping.
ASTM A 36	Specification for Structural Steel.
ASTM A 48	Specification for Gray Iron Castings.
ASTM A 126	Specification for Gray Iron Castings for Valves, Flanges, and Pipe Fittings.
ASTM A 536	Specification for Ductile Iron Castings.
ASTM B 61	Specification for Steam or Valve Bronze Castings.
ASTM B 62	Specification for Composition Bronze or Ounce Metal Castings.
ASTM B 148	Specification for Aluminum-Bronze Castings.
ASTM B 584	Specification for Copper Alloy Sand Castings for General Applications.
ANSI/AWWA C500	Gate Valves for Water and Sewerage Systems.
AWWA C550	Protective Interior Coatings for Valves and Hydrants.

1.04 MANUFACTURER

All valves shall be the product of domestic manufacturing firms which have been engaged in the production of valves for not less than five (5) years.

1.05 QUALITY ASSURANCE

A. Valve Testing: The Contractor is advised that he is required to furnish all labor, materials and equipment necessary to pressure test each valve furnished by himself or the OWNER, bi-directionally, prior to installation, to the satisfaction of the Engineer of Record. If the valves are available, the tests shall be performed prior to the start of construction. Otherwise, the tests shall be performed as soon as the valves are available to afford the maximum time for any corrective work required. The Contractor shall include all costs for this requirement under the appropriate Proposal Item(s), no other compensation will be provided.

B. Bronze Parts: Unless otherwise specified, all interior bronze parts of valves shall conform to the requirements of ASTM B 62.

C. Provide valves that have the manufacturer's name and valve rating cast in body.

1.06 SUBMITTALS

A. Shop Drawing: Shop drawings of all valves and operators including associated wiring diagrams and electrical data.

B. Approved Drawings: The Engineer of Record's drawings, which constitute an integral part of this Contract, indicate the general layout of the complete system. Field verification of scale dimensions on plans is directed since actual locations, distances and levels will be governed by actual field conditions. The Contractor shall also review architectural, structural, and mechanical plans and shall adjust his work to conform to all conditions indicated thereon. Discrepancies shown on different plans, or between plans and actual field conditions, or between plans and specifications, shall promptly be brought to the attention of the Engineer of Record, for a decision. All items not specifically mentioned in the specifications or noted on the drawings, but which can be reasonably assumed as necessary to make a complete working installation shall be included.

PART 2 - PRODUCTS

2.01 VALVES

A. General: The Contractor shall furnish all valves, gates, valve operating units, stem extensions, operators and other accessories as shown or specified. All valves and gates shall be new and of current manufacture. All non-buried valves, 6-inch and larger, shall have operators with position indicators. Where buried, these valves shall be provided with valve boxes, covers and valve extensions. Valves mounted higher than 6-feet above working level shall be provided with chain operators. All valves shall have a minimum design pressure rating of 150 psi unless otherwise specified elsewhere herein.

B. Cast iron parts of valves shall meet the requirements of ASTM A126, "Standard Specifications for Gray Iron Castings for Valves, Flanges and Pipe Fittings, Class 'B'." Flanged ends shall be flat-faced and have bolt circle and bolt patterns conforming to ANSI B16.1 Class 125.

C. All castings shall be clean and sound, without defects of any kind and no plugging, welding or repairing of defects will be permitted. All bolt heads and nuts shall be hexagonal conforming to ANSI B18.2. Gaskets shall be full-face and made of synthetic elastomers in conformance with ANSI B16.21 suitable for the service characteristics, especially chemical compatibility and temperature. Non-ferrous alloys of various types shall be used for parts of valves as specified. Where no definite specification is given, the material shall be the recognized acceptable standard for that particular application.

D. All buried valves shall be provided with cast-iron valve boxes unless otherwise indicated. The boxes shall conform with OWNER Standards and be installed perpendicularly, centered around and covering the upper portions of the valve operator. The top of each valve box shall be placed flush with finish grade unless otherwise indicated on the Drawings. Valve boxes shall be as specified elsewhere in this Section.

E. All buried valves and other valves located below a concrete operating deck or level, specified or noted to be key operated, shall have an operator to finish grade or deck level, non-rising stem, a 2-inch square AWWA nut with skirt, and cover or box and cover, as may be required.

F. Valve Flanges: The flanges of valves shall be in accordance with Section 15060, "Piping and Fittings."

G. Gate Valve Stems: Gate valve stems shall be of bronze in accordance with AWWA C515, containing not more than 5 percent of zinc nor more than 2 percent of aluminum.

H. Protective Coating: Except where otherwise specified, ferrous surfaces, exclusive of stainless steel surfaces, in the fluid passages of all valves 4-inch and larger shall receive an epoxy coating in accordance with AWWA C550. Flange faces of valves shall not be epoxy coated. The valve manufacturer, shall certify in writing that such coating has been applied and tested in the manufacturing plant prior to shipment, in accordance with these Specifications. Exterior coating shall be asphalt varnish conforming to Federal Specification TT-C-494A.

I. Valve Labeling: A label shall be provided on all shut-off valves exclusive of hose bibs and chlorine cylinder valves. The label shall be of 1/16-inch brass or stainless steel, minimum 2 inches by 4 inches in size, and shall be permanently attached to the valve or on the wall adjacent to the valve or as indicated by the OWNER.

2.02 VALVE OPERATORS

A. General

1. All butterfly valves, plug valves over 8-inch size and gate valves installed horizontally shall be furnished with geared operators, provided by the manufacturer. All valves of a particular size and pressure rating by a given manufacturer shall be supplied with the same operator. No variation will be permitted during the contract. All valve operators, regardless of type, shall be installed, adjusted, and tested by the valve manufacturer at the manufacturing plant. Operator orientation shall be verified with the OWNER prior to fabrication. If this requirement is not met, changes to orientation shall be made at no cost to the OWNER.

2. All operators shall turn counter-clockwise to open. Operators shall have the open direction clearly and permanently marked. Field adjustment and testing of the operators and valves to ensure proper installation and operation shall be the responsibility of the Contractor.

B. Manual Operators

1. All manual operators shall be equipped with AWWA square nuts, handwheels or chain drives as appropriate. Some small (6-inch or less) valves may be lever operated if so specified elsewhere herein. Where buried, the valves shall have extensions with square nuts or floor stands as indicated on the Drawings. Valves mounted higher than 6 feet above floor or operating level shall have chain operators with chain terminating 4 feet above operating level.

2. Operation of valves and gates shall be designed so that the effort required to operate the handwheel, lever or chain shall not exceed 40 pounds applied at the extremity of the wheel or lever. The handwheels on valves 14 inches and smaller shall not be less than 8 inches in diameter, and on valves larger than 14 inches the handwheel shall not be less than 12 inches in diameter.

3. Chainwheel operator shall be fabricated of malleable iron with pocketed type chainwheels with chain guards and guides. Chainwheel operators shall be marked with an arrow and the word "open" indicating direction to open. The operators shall have galvanized smooth welded link type chain. Chain that is crimped or has links with exposed ends is not acceptable.

2.03 TORQUE LIMITING DEVICE

Each butterfly valve shall be provided with a torque limiting device designed to protect the actuator and valve parts. The device shall consist of an overtorque protection mechanism enclosed in a hermetically sealed cast iron housing. The mechanism shall be permanently lubricated and factory set to trip between 200 and 220 ft. lbs. of applied torque. The housing shall have integrally cast, 2-inch AWWA operating nut and matching socket to operate and to fit over the actuator or extension shaft nuts, respectively. The socket shall be provided with a set screw to fit the device. The direction of rotation shall be permanently shown with word and arrow next to the operating nut. The entire device shall be coated inside and out with a 2-part epoxy. The torque limiting device shall be as manufactured by Annspach Controls Company of St. Louis, Missouri, or approved equal.

2.04 FLOOR STANDS

Floor stands shall be cast iron, non-rising stem type with lockable hand wheel operator, valve position indicator and stainless steel or bronze extension stem. Hand wheel shall be lockable in the full open and full closed positions. The floor stand shall be furnished with an armored padlock and six keys. Lock shall be as manufactured by Master, Schlage or equal. Floor stand shall be standard pattern type as manufactured by Clow Corporation, or equal.

2.05 VALVE BOXES

Cast iron valve boxes shall be provided for all valves installed underground. All valves boxes shall be No. 2 or 3 (for water) and No. 52 or 53 (for sewer) in accordance with the Standards.

PART 3 - EXECUTION

3.01 INSTALLATION

A. General: All work shall be performed by skilled workmen experienced in similar installations. All valves shall be adequately supported by clamps, brackets, straps, concrete supports or other devices as shown or specified. All supports shall be secured to structures by approved inserts or expansion shields and bolts.

B. All valves shall be thoroughly cleaned internally before being installed. Installation of valves shall be done in accordance with construction methods specified in "Pipes and Fittings" Section of these Specifications.

C. Install valves as recommended by manufacturer.

D. Install valves so that they are easily accessible for operation, visual inspection and preventive maintenance.

E. Location of valves and chain operators: Install valves so as to be accessible for operation and free from interferences when operated. Position so that leakage will not contact any electrical equipment that may be located below.

F. The installation of all underground valves shall include a valve box and riser in accordance with the Details shown on the Plans or in the Standard Details for the various sizes and types of valves to be installed. Riser pipes and valve boxes shall be carefully centered and set flush with the finished grade if in paving, or with the top of the ground if out of paved areas. All valve boxes shall be held in position with concrete as shown on the Plans or in the Standard Details.

G. Upon completion of the Project, but prior to final acceptance, the Contractor in the presence of the Engineer, shall fully open each valve installed by him, except at connections to existing OWNER mains. For valves 16-inch and larger, the Contractor, shall count the number of turns required to operate each valve from a completely closed to a fully opened position, and shall paint the number on the bottom of the valve box lid or manhole cover. Valves at connections to existing OWNER mains shall only be operated by OWNER forces.

END OF SECTION

SECTION 15102

TAPPING SLEEVES AND TAPPING VALVES

PART 1 GENERAL

1.01 SCOPE

A. The Contractor shall furnish and install tapping sleeves and tapping valves, as shown on the Plans and/or as specified herein. All items not specifically mentioned in these specifications or noted on the Drawings, but which can be reasonably inferred as necessary to make a complete working installation, shall be included.

B. Tapping sleeves, where shown on the Plans, shall fit the existing pipe to be tapped and the Contractor shall determine the outside diameter and type of pipe before ordering the sleeve. Field verification of dimensions is directed since actual locations, distances and levels will be governed by actual conditions. The Contractor shall adjust his work to conform to said field conditions.

C. The Contractor is responsible for having the work properly scheduled, location excavated in accordance with Trench Safety requirements, pipe restrained, excavation dewatered and all conditions ready for the tap to be made.

1.02 RELATED WORK SPECIFIED ELSEWHERE

Section 15100 “Valves, General”
Section 15120 “Gate Valves”

1.03 MANUFACTURE

A. All valves shall be the products of domestic manufacturing firms which have been regularly engaged in the production of valves for at least 5 years. All valves specified herein shall be tested at the factory in accordance with the AWWA Standard Leakage and Hydrostatic Test as modified herein and a certified test report shall be furnished for each valve upon request.

1.04 SUBMITTALS

A. Shop Drawings: Submit shop drawings for all tapping sleeves and valves not on Pre-Approved products List.

B. Complete technical data and information on tapping sleeves for pipe other than cast iron shall be submitted to the OWNER for approval on an individual basis.

PART 2 PRODUCTS

2.01 TAPPING SLEEVES

A. Tapping saddles approved for use by the MDWASD/OWNER are shown on Sheet 6.0 Tapping

Sleeves of the Pre-Approved Product List.

B. Tapping sleeves with MJ outlets to connect MJ gate valves shall be constructed of 316 stainless steel. This shall apply to both water and sewer applications unless otherwise approved by the OWNER. These units shall be manufactured of AISI Type 316 stainless steel passivated after welding or Type 316L. Threaded fasteners shall be Type 316 and gasketing shall be Neoprene, EPDM, or Nitrile for sanitary sewer use and SBR for potable water. A standard resilient-seated gate valve shall be attached to the MJ outlet of the sleeve.

C. Cast Iron tapping sleeves shall be designed to withstand a working pressure of at least 150 psi. Cast iron tapping sleeves shall be used with a flanged tapping valve.

D. Full size taps (8-inch tap on an existing 8-inch main, 12-inch tap on an existing 12-inch, etc) main shall be made with a 316 stainless steel tapping MJ outlet sleeve. The inside diameter of the mechanical joint outlet fitting and branch shall be larger in diameter than nominal to allow the use of a full-size cutter.

E. Tapping saddles for concrete pipe sewer mains 42-inches and larger may use a fusion bonded epoxy carbon steel saddle with 316 stainless steel straps. Large diameter saddles shall be individually approved by the OWNER on a case by case basis.

F. Each mechanical joint on the tapping sleeve shall be furnished complete with tee-head bolts and nuts complying with ANSI/AWWA C111/A21.11 "Rubber-Gasket Joints for Ductile-Iron and Gray-Iron Pressure Pipe and Fittings" (latest edition). Tee-head bolts and hex nuts shall be of high strength cast iron. Bolts and nuts to join the two halves of the sleeve together shall be standard carbon steel, hex, or tee-head bolts and nuts which have been galvanized.

G. The tapping sleeves, including outlet flanges shall be as dimensioned and thicknesses shall be as required by AWWA/ANSI C110/A21.10. The tapping sleeves shall be mechanical joint ended, on the run, and shall have a connecting flange outlet, with centering groove (for all valves size 12-inch and below and for valves above 12-inch if available from the manufacturer), for connecting to the tapping valve. For tapping sleeves with outlets 12 inches and smaller, the connecting flange joint between the tapping sleeve and the tapping valve shall be in compliance with all applicable provisions of MSS Standard Practice SP60, latest revision, as developed and approved by the Manufacturers Standardization Society of the Valve and Fittings Industry, 127 Park Street N.E. Vienna, VA. 22180. For tapping sleeves with outlets larger than 12 inches, the connecting flange must provide a matching fit with tapping valves by other manufacturers.

H. Each tapping sleeve shall be furnished complete with all necessary split end gaskets, longitudinal gaskets and two-piece (split) steel glands (follower glands held in place by set screws not acceptable). Gasket shall be shipped separately in suitable protective containers. Material for split end gaskets shall conform to ANSI/AWWA Standard C111/A21.11. Material for longitudinal gaskets shall be rubber conforming to ANSI/AWWA Standard C111/A21.11.

I. Each tapping sleeve shall be furnished complete with all necessary split end gaskets, longitudinal gaskets and two-piece (split) steel glands (follower glands held in place by set

screws not acceptable). Gasket shall be shipped separately in suitable protective containers. Material for split end gaskets shall conform to ANSI/AWWA Standard C111/A21.11. Material for longitudinal gaskets shall be rubber conforming to ANSI/AWWA Standard C111/A21.11.

J. The sleeves shall be suitable for use with ductile iron pipe conforming to ANSI/AWWA Standard C151/A21.51, "Ductile-Iron Pipe, Centrifugally Cast in Metal Molds or Sand-Lined Molds, for Water or Other Liquids", with wall thickness and outside diameter as specified in Table 51.4 and 51.5. The sleeves shall also be suitable for use with other cast iron pipe with differing outside diameters and other types of pipe where required.

K. Each tapping sleeve shall be Factory Hydrostatically tested on pipe to verify proper fit and weld integrity with zero leakage.

2.02 TAPPING VALVE

A. Resilient-seated tapping valves shall have a mechanical joint outlet end conforming to ANSI/AWWA Standard C111/A21.11-00, "Rubber Gasket Joints of Ductile-iron and Gray-Iron Pressure Pipe and Fittings," for connection to new piping and a flange inlet with centering ring, for connecting to the tapping sleeve.

B. The tapping valves shall conform to the requirements listed for gate valves, including bypass valve when applicable, shall be furnished complete with all joint materials. Joint materials for the flanged inlet shall be ANSI-sized and approved and shall include a 1/8-inch thick full-faced neoprene gasket, and hot dipped galvanized carbon steel bolts and nuts with internal threads tapped or retapped after galvanizing. The flange inlet gaskets shall conform to the gasket material and property requirements set forth in ANSI/AWWA Standard C111/A21.11-00. All gaskets and seals shall be neoprene, Buna-N, or approved equal, but not natural rubber. The mechanical joint outlets shall include the necessary joint materials conforming to the requirements of joint materials for mechanical joint ended gate vales as specified in Section 5.07.3 "Valves - Resilient Seated Gate Valves." Bolt holes in the flanges of the mechanical joint shall be equally spaced and shall straddle the vertical centerline. Gaskets shall be shipped separately in suitable protective containers. Resilient-seated tapping valves shall be as manufactured by U.S. Pipe and Foundry Co., American Flow Control, Mueller, or approved equal.

PART 3 EXECUTION

3.01 GENERAL

A. Taps 20-inches and smaller for water mains will be made by OWNER forces or by Contractor when directed by the OWNER. Taps of any size into concrete mains shall be done by a tapping specialist with credentials acceptable to the OWNER.

B. Taps of any size into concrete or PCCP water mains shall be made by a tapping specialist with credentials acceptable to the OWNER.

C. Tap of any size to sewage force mains shall be made by a tapping specialist with credentials acceptable to the OWNER.

D. The tapping specialist shall be from any of the following:
   a. EA Tapping Services
   b. Hydra-Stop, a division of ADS LLC.
   c. Rangeline Tapping Service, Inc.
   d. T.D.W. Services Inc.
   e. or approval equal

E. The Contractor shall notify the Engineer at least seven days in advance of when he will be ready to make the connection and shall have the tapping valve installed on the existing main with the new equipment satisfactory pressure tested and sufficient excavated work areas prepared for the OWNER forces when they arrive to make the tap.

F. The Contractor shall furnish and install a mechanical joint plug on the free end of the tapping valve, and shall pressure test the tapping sleeve and valve after installation on the main, but prior to tapping operations. No leakage will be permitted at any joint in either the tapping sleeve or tapping valve. The tapping sleeve and valve shall be filled with water and then pressurized at design test pressure. Duration of the test shall be determined by the OWNER. The test shall be conducted in the presence of the Engineer, who will notify OWNER forces of the satisfactory conclusion of the test, and arrange a definite time and date for them to arrive at the site to make the tap. No leakage shall be permitted at any joint in either the tapping sleeve/saddle or valve.

G. The tapping valve requires the installation of a cast iron riser pipe complete with valve box and cover, centered over the operator, and set in concrete.

H. All necessary sheeting, shoring, dewatering, excavation, backfill and compaction, surface repairs, and other items and work appurtenant to or incidental to the work shall be performed by the Contractor.

I. For Concrete mains the tapping saddle shall be tested after installation at a pressure of 5 psi lower than the operating pressure of the pipeline at the time of the test. A pressure reading shall be taken from an air release valve prior to performing the pressure test on the saddle.

J. The Contractor shall pressure test the tapping sleeve and valve after installation on the main, but prior to tapping operations. The test shall be conducted in the presence of the OWNER's Inspector. No leakage will be permitted at any joint in either the tapping sleeve or tapping valve.

K. When the invert of the tapping valve is under water, interlocking sheeting and

tremie concrete shall be used, unless otherwise approved by the OWNER. Seal the perimeter of all pipes passing through the sheeting below the water table. Only minimum seepage will be permitted. The cofferdam must be designed and sealed by a State of Florida, P.E. No work will be permitted within the cofferdam until it is demonstrated to the OWNER to be dry. Approval to remove the initial water in the cofferdam must be obtained from the OWNER and other governmental agencies jurisdiction over the work.

3.02 TAP BY OWNER FORCES

A. The Contractor shall notify the OWNER at least 48-hours in advance of when he will be ready to make the tap and shall have the tapping sleeve and valve installed on the existing main and satisfactorily tested as specified below, with a sufficient excavated work area prepared for the OWNER forces when they arrive to make the tap.

B. The Contractor shall furnish and install a mechanical joint plug on the free end of the tapping valve, and shall pressure test the tapping sleeve and valve after installation on the main, but prior to tapping operations. No leakage will be permitted at any joint in either the tapping sleeve or tapping valve. The tapping sleeve and valve shall be filled with water and then pressurized to the required test pressure. Duration of the test shall be determined by the OWNER. The test shall be conducted in the presence of the OWNER's Inspector, who will notify OWNER forces of the satisfactory conclusion of the test, and arrange a definite time and date for them to arrive at the site to make the tap.

C. A crane or other suitable equipment as approved by the OWNER, shall be furnished by the Contractor to unload the tapping machine, position it in the trench for bolting to the valve, and to reload it after the tapping operation has been completed.

D. OWNER forces will connect the tapping machine to the valve, and disconnect it after the tap is complete; however, the Contractor shall furnish suitable devices or material to support the machine in the trench for proper alignment, as required by the OWNER. The Contractor shall aid the OWNER's forces whenever and to whatever extent necessary for the tapping operation to be performed efficiently and without any undue time lost.

3.03 TAPPING BY NON-OWNER FORCES

A. The Contractor shall comply with all applicable provisions of Subsections 3.01 and 3.02, above, including installation and pressure testing of tapping sleeve and valve in the presence of the OWNER's Inspector.

B. Since cutting equipment used for this type of installation is of a special design, the Contractor shall make provisions for furnishing a tapping specialist to perform actual tapping operation. The qualifications of the tapping specialist shall be forwarded to the OWNER prior to any tapping work. The Contractor shall also furnish all incidental equipment necessary to operate the tapping machine and perform a complete operation to the satisfaction of the Engineer.

C. The tapping valve shall be installed in the horizontal position with the operator in the vertical position, and shall include a valve box cover. Tapping valves shall be left in the closed position.

D. All tapping operations shall be conducted under the direct supervision of the previously approved tapping specialist. All operations shall have prior approval of the OWNER.

3.02 RECORD DRAWINGS

A. Record Drawings shall be prepared in accordance with Section 01720.

B. The location and elevation for each valve, tapping outlet, fitting, service line and other appurtenances along the pipeline shall be recorded by the Contractor's Florida Registered Surveyor and Mapper.

END OF SECTION

SECTION 15110

BUTTERFLY VALVES

PART 1 - GENERAL

1.01 SCOPE

The Contractor shall furnish and install rubber-seated butterfly valves in all locations as shown on the Plans. All butterfly valves shall be as specified herein.

1.02 REFERENCE SPECIFICATIONS, CODES, AND STANDARDS

The Contractor shall provide and install all work in accordance with the latest edition of all applicable regulations and governing codes, including the following standards:

ANSI/AWWA C504 Rubber-Seated Butterfly Valves.

AWWA C550 Protective Interior Coatings for Valves and Hydrants.

Where a conflict in requirements occurs the more stringent requirement shall govern.

1.03 RELATED WORK SPECIFIED ELSEWHERE

Section 15100-Valves, General

1.04 CONTRACTOR SUBMITTALS

The Contractor shall submit shop drawings, test and compliance certifications of all valves .

1.05 QUALITY ASSURANCE

A. Butterfly valves shall be furnished be the products of firms which have been regularly engaged in the manufacture of such items for a period of at least five (5) years.

B. All valves shall be tested at the factory in accordance with AWWA Standard C504, Section 5.2.4 and the Contractor shall furnish a manufacturer's Certified Test Report with each valve.

C. All valves specified herein shall be furnished with an affidavit from the manufacturer(s) certifying that the valves furnished comply with all applicable provisions of the AWWA Standards as revised and cited below.

PART 2 - PRODUCTS

2.01 BUTTERFLY VALVES

A. General

The butterfly valves shall be manufactured in accordance with the applicable provisions of ANSI/AWWA Standard C504-94, "Rubber-Seated Butterfly Valves" as modified herein. The valves shall be designed for installation in a horizontal pipeline, unless otherwise shown on the Plans, with the valve shaft in a horizontal position and the operating shafts in a vertical position. The valve may be installed under buried or submerged conditions now or in the future and shall always be of a suitable design for those conditions. The valves shall be AWWA Class 150B.

B. Valve Body

The valve body shall be made of cast iron conforming to ASTM Standard A126, "Gray Iron Castings for Valves, Flanges and Pipe Fittings", Class B, or ASTM Standard A48, "Gray Iron Castings", Class 40. No disc stops shall be allowed on the body.

C. Mechanical Joint Valves

Mechanical joint valves shall have ends complying with ANSI/AWWA Standard C111/A21.11-90, "Rubber-Gasket Joints for Ductile-Iron and Gray-Iron Pressure Pipe and Fittings". Mechanical joint gaskets, glands, and high strength cast gray or ductile iron tee-head bolts and hex nuts shall be included with the valve. Follower glands held in place with set screws will not be acceptable. Bolts holes in the flanges of the mechanical joints shall be equally spaced and shall straddle the vertical centerline. Gaskets shall be shipped separately in suitable protective containers.

D. Flanged Valves

Flanged valves shall have ends faced and drilled conforming to ANSI Standard B16.1, "Cast Iron Pipe Flanges and Flanged Fittings", Class 125. Bolt holes shall not be tapped except as may be required by the shaft hubs. Flanged valves shall have short bodies with laying lengths as specified in Table 2 of ANSI/AWWA Standard C504-94. Bolt holes in the flanges shall be equally spaced and shall straddle the vertical and horizontal centerlines. All joint materials for flanged valves will be furnished with the valve.

E. Valve Shafts

Valve shafts shall be one piece straight through, or two piece stub-type, AISI Type 316 stainless steel or Monel construction. Shaft design and sizing shall preclude any disc edge-to seal excess or insufficient clearance due to “sag”, “play” or “tolerance add up” in the disc-shaft-bearing assembly. All nuts, bolts, pins or other items within the valve or in contact with water shall be of AISI Type 316 stainless steel, or approved equal.

F. Pins

The pins connecting the disc and the shaft of all valves shall be mechanically secured. All valves with one-piece through shafts shall have at least two pins. Valves 24-inch and smaller with two-piece stub type shafts shall have one or two pins in the primary or operating shaft and at least one pin in the secondary shaft. Valves 30-inch and larger with two-piece stub type shafts shall have at least two pins in the primary or operating shaft and at least one pin in the secondary shaft. Each pin on the primary or operating shaft shall be sized to take full design load imposed on the disc. Pins shall be either force fit or mechanically locked. Mechanical

locking shall be by lock washers, lock nuts, force fit or other sturdy and corrosion resistant means. No roll pins will be allowed. Riveted or welded type pins will not be allowed.

G. Valve Disc

Valve discs shall seat at an angle of 90 degrees to the pipe axis. Valve discs shall be made of cast iron (conforming to ASTM Standard A48-83(1990), Class 40, "Gray Iron Castings"; ASTM Standard A126-84(1991), "Gray Iron Castings for Valves, Flanges and Pipe Fittings", Class B; or ASTM Standard A536-84, "Ductile Iron Castings", Grade 65-45-12; of cast steel conforming to ASTM Standard A216-93, "Steel Castings, Carbon Suitable For Fusion Welding for High-Temperature Service", Grade WCB, or of alloy cast iron conforming to ASTM Standard A436-84, "Austenitic Gray Iron Castings", Type 1 or 2; or ASTM Standard A439-83(1994), "Austenitic Ductile Iron Castings", Type D2, and with a maximum lead content of 0.003 percent). The seating edge of the disc for its full width shall be AISI Type 316 stainless steel, Monel metal, or nickel-chrome (18-20) applied by the plasma arc-weld process. Valves with angle seating or fabricated steel discs are not acceptable. Sprayed metal seating edges are not acceptable. Welded seating edges shall be at least 3/32-inch thick.

H. Valve Seats

Valve seats shall be secured to the valve body only. Seats secured to the valve discs are not acceptable. Valve seats shall be made of new synthetic rubber and may be reinforced by the manufacturer. Rubber seats on valves 24-inch and smaller shall be secured to the valve bodies by vulcanizing, or by cementing and clamping. On valves 30-inch and larger, the seat shall be mechanically held by means of grooves machined or cast in the valve body and shall be designed in such a way as to hold the seats from popping out when secured or when subjected to compression. The seats shall be fully adjustable and replaceable with the valve installed. All parts of clamps and fastening devices shall be made of AISI Type 316 stainless steel or other approved non-corrodible material. Bolts may be used to hold rubber-seat clamps in place, but the bolts shall not go through the rubber seat itself. Durometer hardness, reinforcement, dimensions and section of the rubber seat shall be selected and matched to the valve size and clearances such that adequate seal contact pressure is generated without excessive amounts of seal material being extruded into the annulus between the disc edge and body. In addition to meeting the above conditions, bidders shall present conclusive evidence proving that seats of the offered design are being successfully used in 30-inch and larger butterfly valves furnished by the same manufacturer. Sprayed or plated mating seat surfaces are not acceptable.

I. Valve Bearings

Valve bearings shall be self-lubricating, corrosion resistant, sleeve type and with thrust bearings as required by Section 3.6 of ANSI/AWWA Standard C504-94. Shaft to bearing clearance under maximum loads shall be such that excessive or insufficient clearances cannot develop between disc and seat surfaces particularly when the disc is in the sealed (vertical) position.

J. External Ferrous Items

All external ferrous items, except cast iron, shall be hot-dipped galvanized in accordance with ASTM Standard A123-89a, "Zinc (Hot-Galvanized) Coatings on Iron and Steel Products", or ASTM Standard A153-82(1987), "Zinc Coating (Hot-Dip) on Iron and Steel Hardware", or stainless steel.

K. Shaft Seals

Shaft seals shall be as required by Section 3.7 of ANSI/AWWA Standard C504-94.

2.02 OPERATORS

A. Manual operators for valves 24-inch and smaller shall be of totally enclosed worm gear or traveling-nut type, permanently lubricated, suitable for buried or submerged operation in accordance with ANSI/AWWA Standard C504-94.

B. Manual operators for valves 30-inch and above shall be totally enclosed worm gear operators, permanently lubricated, suitable for buried and submerged operation, and shall be Limitorque type HBC, or approved equal, in accordance with ANSI/AWWA Standard C504-94, with AWWA input shaft stop.

C. Manual operators shall be provided with completely enclosed mounting brackets or adapters.

D. The operators shall be sized to provide the maximum torque as shown in Table 4 of ANSI/AWWA C504-94 for the class and size of valve specified. In addition, the operator shall be capable of withstanding an input torque of 300 ft.lbs. on the operating nuts and all operators on valves 30-inch and larger shall be equipped with an AWWA input shaft stop. The operator shall be equipped with adjustable stops to prevent over travel of the disc in both the closed and open positions, with standard AWWA 2-inch square operating nuts with skirts, or with extension shafts as listed herein and with a shear pin in the operating nut designed to protect the operator from damage due to overload. All valves shall open by turning the operating nuts counterclockwise. Each operator for the valves 30-inch and larger shall be equipped with a brass plate die-stamped with letters and numerals, at least ½-inch high, indicating the number of turns necessary to fully open the valve from a fully closed position as determined by factory test. The plate shall be secured to the operator so that it may be read from the top when the valve is in an installed position. As previously specified, operators shall be for buried, submerged conditions which precludes installation of a position indicator. However, where valves and operators are ordered for above grade service a position indicator shall be located in the top of the operator to show the position of the butterfly valve. This indicator shall remain synchronized during operation. The position indicator shall be weatherproof.

E. After mounting, each operator shall be factory adjusted to insure that the valve will operate from a fully open to a fully closed (seated) position without further adjustment by the installing contractor. An affidavit from the manufacturer certifying to this, stating the number of turns required to fully open the valve from a fully closed position as determined by factory test and certifying that the valve is set to open in a counterclockwise direction shall be shipped with the valve. Both copies of this certification shall be signed, sealed and dated by a licensed professional engineer registered to practice in the state wherein the tests and adjustments are performed.

2.03 OPERATOR EXTENSION SHAFT

A. Operator extension shafts shall be designed and furnished by the valve manufacturer and shall each be complete with coupling, standard AWWA 2-inch square operating nut with skirt, shear pins and centering-identification plate, for connection to the valve operator (or input) shaft as specified herein below.

B. All operator components between the operating nut and the adjustable stops shall be designed to withstand, without damage, an input torque of 300 ft.lbs. The extension shaft shall be a one-piece shaft and shall be furnished with an AWWA 2-inch square operating nut with skirt, mounted and pinned to the top of the shaft. A coupling shall be provided for the bottom of the shaft to connect the extension to the valve operator (or input) shaft. The coupling will be connected to the extension shaft after the exact required length of the shaft has been determined by the field measurement during the valve installation.

C. The coupling shall be designed for welding to the extension shaft, and mounting and pinning to the valve operator (or input) shaft. The pin through the coupling and valve operator (or input) shaft shall be of a larger diameter than the pin through the top nut and extension shaft, so that if torques exceed the designed limits, the pin through the nut will shear first. The extension shaft shall also be equipped with a combination centering-identification plate as specified below.

D. Valves 30-inches and larger shall be installed complete with manholes. No extension shafts are required.

2.04 TORQUE LIMITING DEVICE

Each valve shall be provided with a torque limiting device designed to protect the actuator and valve parts. The device shall consist of an overtorque protection mechanism enclosed in a hermetically sealed cast iron housing. The mechanism shall be permanently lubricated and factory set to trip between 200 and 220 ft.lbs. of applied torque. The housing shall have integrally cast, 2-inch AWWA operating nut and matching socket to operate and to fit over the actuator or extension shaft nuts, respectively. The socket shall be provided with a set screw to fit the device. The direction of rotation shall be permanently shown with word and arrow next to the operating nut. The entire device shall be coated inside and out with a 2-part epoxy. The torque limiting device shall be as manufactured by Annspach Controls Company of St. Louis, Missouri, or approved equal.

2.05 (NOT USED)

2.06 FINISHES

A. Interior Coating

1. The interior coating of the valve bodies shall be a two-part epoxy specially formulated for potable water service and applied according to the coating manufacturer's recommendations.

2. All interior coating products must meet the approval of the United States Environmental Protection Agency for contact with potable water. The coating shall conform to ANSI/AWWA C550-90, "Protective Epoxy Interior Coatings for Valves and Hydrants",

and shall not contain coal tar. All parts of the interior of the valve body and disc, except for rubber or stainless steel, shall be so coated.

B. Exterior Coating

Exterior painting shall be asphalt varnish conforming to Federal Specification TT-C-494A as required by Section 4.2 of ANSI/AWWA Standard C504-87.

2.07 TESTING

The butterfly valves shall be tested in accordance with ANSI/AWWA C504-94, Section 5, Subsection 5.2. The performance test (Subsec. 5.2.1) and the hydrostatic test (Subsec. 5.2.3) shall be performed as stated, but the leakage test (Subsec. 5.2.2) shall be performed bidirectionally; first on one side of the valve, and then on the other. The Contractor shall furnish a manufacturer's certified test report with every valve stating that the valve has met the requirements of the tests.

2.08 ACCEPTABLE PRODUCTS

Valves shall be DeZurik Model BAW, Pratt No. 2F2 (20" or under), Pratt No. XR70 (above 20") or approved equal. Valves and operators shall be modified as necessary to conform with this Specification.

PART 3 - EXECUTION

3.01 VALVE INSTALLATION

A. General: All valves, gates, operating units, stem extensions, operators, valve boxes, and accessories shall be installed in accordance with the manufacturer's written instructions and as shown and specified. Valves shall be firmly supported to avoid undue stresses on the pipe.

B. Access: All valves shall be installed to provide easy access for operation, removal, and maintenance and to avoid conflicts between valve operators and structural members or handrails.

C. Valve Accessories: Where combinations of valves, sensors, switches, and controls are specified or shown on the Drawings, it shall be the responsibility of the CONTRACTOR to properly assemble and install these various items so that all systems are compatible and operating properly. The relationship between interrelated items shall be clearly noted on shop drawing submittals.

D. The installation of butterfly valves with valve box and riser shall include the installation of extension shaft. The valve operator shall be installed with the extension shaft, coupling, nut and data plate as shown on the plans or Standard Details. Where a plug is located adjacent to a butterfly valve, a short piece of D.I. pipe (nominal size equal to that of the valve) of length sufficient to permit clearance for rotation of the valve disc shall be installed between the valve and the plug.

E. Installation of butterfly valves 30-inch and larger shall include the installation of a valve manhole as shown in the Standard Details.

F. Above grade testing of the valve by the installing contractor is required as specified in Section 15100-”Valves, General”, 1.05A.

- END OF SECTION
–

THIS PAGE LEFT INTENTIONALLY BLANK

SECTION 15115

CHECK VALVES

PART 1 - GENERAL

1.01 SCOPE OF WORK

The Contractor shall furnish and install check valves complete and operable, including all appurtenances and accessories.

1.02 RELATED WORK SPECIFIED ELSEWHERE

Section 15100 - Valves, General

PART 2 - PRODUCTS

2.01 CHECK VALVE

A. General

1. The swing-check valves shall be standard (plain), outside lever-and-weight or outside lever-and-spring types, for normal horizontal installations, conforming to all of the applicable requirements of the most current ANSI/AWWA Standard C508, "Swing-Check Valves for Waterworks Service, 2-in. Through 24 In. NPS", except as otherwise specified herein. The valves shall be iron body, bronze mounted and suitable for buried service.

2. Valve bonnet opening shall be large enough to allow ample clearance for direct removal of disc by hand.

B. External Ferrous Items

All external ferrous items, except cast iron, shall be hot-dipped galvanized in accordance with the most current ANSI/ASTM Standard A123, "Zinc (Hot-Galvanized) Coatings on Iron and Steel Products", or ANSI/ASTM Standard A153, "Zinc Coating (Hot-Dip) on Iron and Steel Hardware", or stainless steel.

C. Flanged Valves

Flanged valves shall have ends plain-faced and drilled conforming to ANSI Standard B16.1, "Cast Iron Pipe Flanges and Flanged Fittings", Class 125. Bolt holes in the flanges shall be equally spaced and shall straddle the vertical and horizontal centerline. All joint materials for flanged valves will be furnished with the valves; neoprene for sewer and SBR for water applications.

D. Clapper

1. The clapper shall swing clear of the waterway when the valve opens, permitting a full flow through the valve equal to the nominal diameter of the pipe.

2. The body and clapper seating surface shall be metal to metal, and shall be bronze.

3. The clapper disc and the clapper hinge arm, including the clapper disc cap screw, shall be bronze or cast iron. Clapper to hinge arm connection shall be such that the unit cannot be unscrewed by fluid flow.

D. Clapper Hinge Pin

1. The clapper hinge pin (shaft) shall be stainless steel conforming to AISI Type 316. For check valves with outside levers, the clapper hinge pin shall rest in bronze bushings and shall extend through the casing on the right hand side when facing the valve inlet.

2. The clapper hinge pins shall rest in bronze bushings provided with a compression packing or double nitrile o-ring seal and shall extend through the casing on the right hand side when facing the valve inlet. An opening shall be provided in each of two bosses on the body for easy access to either end of the hinge pin. The openings shall be tapped and provided with plugs.

E. See Part 2 of Section 15100, "Valves, General", for other components.

2.02 TESTING

All check valves shall be tested at the factory in accordance with Section 5.2 of the most current ANSI/AWWA Standard C508 and a Certified Test Report shall be furnished with each valve.

PART 3 - EXECUTION

3.01 GENERAL

All valves shall be installed in accordance with provisions of Section 15100, "Valves, General." Care shall be taken that all valves are well supported.

END OF SECTION

SECTION 15120

GATE VALVES

PART 1 - GENERAL

1.01 SCOPE OF WORK

A. The Contractor shall furnish and install gate valves complete and operable, including all appurtenances and accessories.

B. The OWNER will permit the use of resilient seated type gate valves in potable water systems, as described herein. Such use shall be restricted to potable water systems of nominal sizes 4-inch through 48-inch. All other size or system applications shall be allowed only if reviewed and approved by the OWNER. Resilient seat gate valves shall only be used in sewer applications where cover depth is sufficient to mount the valve in the vertical position and only with review and approval of the OWNER. Sewer lines may not dipped or lowered in close proximity to a gate valve for the purpose of providing said cover. Resilient seat gate valves used as tapping valves in sanitary sewer systems and laid upon their side shall be left open when the line is placed in operation and backed up with a plug valve to provide flow control.

1.02 RELATED WORK SPECIFIED ELSEWHERE

Section 15100 - Valves, General

PART 2 - PRODUCTS

2.01 GATE VALVES, GENERAL

A. As used herein, "ANSI" denotes the American National Standards Institute; "AWWA" denotes the American Water Works Association; and "ASTM" denotes the American Society for Testing and Materials.

B. All valves specified herein, whether manufactured under the provisions of AWWA C515, latest revision "Reduced-Wall, Resilient-Seated Gate Valves for Water Supply Service" shall be furnished with an Affidavit of Compliance from the manufacturer as required by Section 6.3 of AWWA C515 latest revision.

C. The OWNER requires that suppliers shall submit with their proposals, if bidding on valve sales to the OWNER; or shop drawings, if supplying valves to the OWNER for contract or donations work; all data as listed in the "Data to Be Supplied by the Manufacturer" Sections of the referenced standards. This material is Section 4.1 in C515, latest revision and is identical. Data to be furnished is as follows:

"*Catalogue Data.* The manufacturer shall supply catalogue data, including illustrations and a parts list that identifies the materials used for various parts. The information shall be in sufficient detail to serve as a guide in the assembly and disassembly of the valve and for ordering repair parts.
Weight information. The manufacturer shall provide a statement of the net assembled weight for each size of valve exclusive of joint accessories.

Assembly Drawings. The manufacturer or supplier shall submit to the purchaser one set of drawings showing the principal dimensions, construction details, and materials used for all parts of the valve. All work shall be done and all valves shall be provided in accordance with these drawings after the drawings have been reviewed and accepted by the purchaser."

In the quotation above, the word "purchaser" shall be construed to mean the OWNER in either direct purchase or contract/donations situations.

D. All work performed according to the standards cited above, except prototype testing, shall be subject to inspection and acceptance by the OWNER or its representatives who shall have access to all places of manufacture where these valves are being produced and tested. Suppliers shall, with their shop drawing submittals, submit the company name and location of the actual manufacturer of the valve which shall include Country, City, and street address of the manufacturer. Where valves are not domestically produced and tested, the OWNER reserves the right to require that the Affidavit of Compliance be signed and sealed by a Professional Engineer, licensed to practice in the state of where the importing firm is located or the State of Florida. When this is required, the OWNER's decision as to its necessity shall be final and no extra compensation will be allowed.

E. All valves shall conform with ANSI/NSF Standard 61, "Drinking Water System Components-Health Effects".

F. Grades B and C bronze as listed in Table 1 of AWWA C500, latest revision shall not be used in the fabrication of any of the various valve types listed in this specification. Aluminum bronzes, if used, shall not dealuminize and the method of preventing this shall be fully described in the submittal.

G. AWWA Standard C515, latest revision lists a number of copper alloys for valve stems and gates. Of these the OWNER will accept alloys with the following Unified Numbering Series (UNS) numbers; C66100, C87600, C99400 and C99500. This same standard lists other copper alloys for Stem Nuts and Gates. Of these the OWNER will accept alloys with the following UNS numbers; C83600, C83450, C95200, C95500, C95800 C99400 and C99500.

H. Other copper alloys not listed in the standard may be used but must meet the performance requirements of the Standard, including but not limited to, minimum yield strength, chemical requirements and corrosion. The OWNER requires that alloys containing more than sixteen (16) percent zinc shall <u>not</u> be used.

2.01 RESILIENT SEATED GATE VALVES

A. Resilient-seated gate valves shall be manufactured in accordance with the applicable provisions of the most recent ANSI/AWWA Standard C515, latest revision “Reduced-Wall Resilient-Seated Gate Valves for Water Supply Service” as modified herein.

B. Valves shall have non-rising stems (NRS) and are to be installed under buried and/or submerged conditions. The design working water pressure shall be 250 psig for 3 48-inch sizes. For valves manufactured in conformance with the provisions of AWWA C515, latest revision as modified herein, the design working water pressure shall be a minimum of 200 psi for all sizes. In addition to the pressure requirements, the valve assembly and mechanism shall be capable of withstanding an input torque of 200 ft.lbs. for valves 4-inch and smaller, and 300 ft. lbs. for valves

6-inch and larger. With the valve open the unobstructed waterway shall have a diameter not less than the full nominal diameter of the valve.

C. Valve body: Valves manufactured in conformance with AWWA C515, latest revision shall be iron-bodied and shall conform to ASTM Standard A395-99, "Ferritic Ductile Iron Pressure-Retaining Castings for Use at Elevated Temperatures" or ASTM Standard A536-84 "Ductile Iron Castings". Body and bonnet thickness shall conform with the requirements of AWWA Standard C515 latest revision.

All ferrous metal items in contact with the line fluids, except gray or ductile cast iron, shall be AISI Type 316 stainless steel. Valve body and bonnet gaskets shall be rubber or rubber composition, inorganic mineral fiber and paper are not acceptable. Rubber and rubber composition materials shall be suitable for use in water containing chlorine or chloramines and in sanitary sewage.

D.. Stems, stem nuts, glands and bushings shall be made of bronze as specified in ANSI/AWWA Standard C515 latest revision with no Grades B or C bronze being utilized. The same items for valves made in conformance with C515 latest revision shall be made of the alloys specified above in the last paragraph of the "Gate Valves, General" section of this specification. The stem diameter shall conform to Table 4 of C515 latest revision. All valves shall be equipped with an ANSI/AWWA standard 2-inch square operating nut with skirt, or handwheel when required for above-ground service. Valve stems shall rotate counterclockwise to open. All valves 20-inch and larger shall be equipped with gearing conforming to AWWA standard. Bevel or spur gearing shall be supplied as ordered with no cost differential.

E. "O"-ring stem seals shall be neoprene, Buna-N, or approved equal. No natural rubber compounds will be acceptable. The stem seals shall be of design that permits the replacement of the "O"-ring seals while the valve is in service, without undue leakage.

F. All external ferrous items, except gray or ductile cast iron, shall be hot dipped galvanized in accordance with ASTM Standard A123, "Zinc (Hot-galvanized) Coatings on Iron and Steel Products", or ASTM Standard A153, "Specification for Zinc Coating (Hot Dip) on Iron and Steel Hardware", or Type 304 stainless steel.

G. Resilient seats shall be applied to the disc only and shall seat against a corrosion-resistant surface. The surface may be either metallic or nonmetallic, applied in a manner to withstand the action of line fluids and the operation of the sealing gate under long-term service. A metallic surface shall have a corrosion resistance equal to or better than bronze. A nonmetallic surface shall be in compliance with ANSI/AWWA Standard C550, "Protective Epoxy Interior Coatings for Valves and Hydrants". Resilient seats shall be bonded to the gate. No natural rubber products will be acceptable. If the resilient seat is a rubber material, the method used for bonding or vulcanizing shall be proven by ASTM Standard D429, "Test Methods for Rubber Property-Adhesion to Rigid Substrates", Method A or B. For method A, the minimum strength shall not be less than 250 psi. When Method B is applicable, the peel strength shall not be less than 75 lb/in. All exposed mechanical attaching devices and hardware used to retain the resilient seat shall be of AISI Type 316 stainless steel.

H. Flanged valves shall have ends faced and drilled conforming to ANSI Standard B16.1, Class 125. Bolt holes in the flanges shall be equally spaced and shall straddle the vertical and horizontal centerlines. Joint materials for flanged valves will be furnished with the valves.

I. Mechanical joint valves shall have ends complying with ANSI/AWWA Standard C111/A21.11, "Rubber-Gasket Joints for Ductile-Iron Pressure Pipe and Fittings". Mechanical joint gaskets, glands, tee-head bolts and hex nuts shall be included with the valve. Segmented glands or follower glands held in place with set screws will not be acceptable. Bolt holes in the flanges of the mechanical joint shall be equally spaced and shall straddle the vertical centerline. Gaskets shall be shipped separately in suitable protective containers. Valves for use in sewage shall have neoprene gaskets.

J. Painting and coatings shall conform to the requirements of Fed. Spec. TT-C-494a on exterior ferrous surfaces, and ANSI/AWWA Standard C550 for the interior of the valve. A coating shall be applied to all ferrous parts of the valves except for finished or seating surfaces. Surfaces shall be clean and dry before painting.

K. Testing: All production tests shall be performed on all valves supplied without exception. Operation, shell and seat tests shall be performed as specified in Section 6.2 of AWWA C509 latest revision and Section 5.1.2 of AWWA C515, latest revision as appropriate to the standard which covers the valve in question. An Affidavit of Compliance as specified in paragraph two of the "GATE VALVES, GENERAL", section above, shall be furnished to the OWNER with the invoice for the valves. Final payment (prior to installation in donations situations) by the OWNER will not be made until after receipt of these Affidavits of Compliance.

The gate valves shall conform to AWWA C515, latest revision standard as modified herein and as manufactured by American Flow Control, Mueller or approved equal.

L. Resilient Seated Gate Valves installed in the horizontal position with bevel gearing shall require a flushing port on the side of the valve to clean the tracks. See the Standard Detail WS 4.70 for piping and ball valve installation requirements.

2.03 TAPPING VALVES

A. Tapping valves shall conform to the applicable requirements for the gate valves specified above herein, and also with the requirements listed below.

B. With the valve open, an unobstructed waterway shall be provided, the diameter of which shall be at least the full nominal diameter of the valve, to permit taps to be made through the valve.

C. Tapping valves shall have a mechanical joint outlet end conforming to ANSI/AWWA Standard C111/A21.11-90, "Rubber-Gasket Joints for Ductile-Iron Pressure Pipe and Fittings" or a flanged outlet conforming to ANSI Standard B16.1 Class 125 (as called for in the particular valve order), for connection to new piping and a flanged inlet with centering ring (for all valves of 12-inch diameter and smaller and for all larger valves where the manufacturer produces a centering ring flange in that size), for connecting to the tapping sleeve. For tapping valves 12-inch and smaller, the sleeve shall be in compliance with all applicable provisions of MSS Standard Practice SP 60, latest revision, as developed and approved by the Manufacturers Standardization Society of the Valve and Fittings Industry, 127 Park Street N.E., Vienna, Virginia 22180. For tapping valves larger than 12-inch, the connecting flanged joint between the tapping sleeve and the tapping valve shall be industry standard; however, the tapping valve must provide a matching fit with tapping sleeves by other manufacturers.

D. The tapping valves shall be furnished complete with all joint materials. Joint materials for the flanged inlets shall be ANSI-sized and approved and shall include 1/8-inch thick full faced gaskets and hot-dip galvanized carbon steel bolts and nuts with internal threads tapped or retapped after galvanizing or stainless steel bolts and nuts. The flanged inlet gaskets shall conform to the gasket material and property requirements set forth in ANSI/AWWA Standard C111/A21.11-90. All pipe connection gaskets for use in sewer applications shall be neoprene and natural rubber shall not be used in any application. Seal shall be neoprene, Buna-N, Nitrile, EPDM or approved equal, but not natural rubber. The mechanical joint outlets shall include the necessary joint materials conforming to the requirements of joint materials for mechanical joint ended gate valves of the appropriate type specified above herein (neoprene for use with sewer). Bolt holes in the flanges of the mechanical joint shall be equally spaced and shall straddle the vertical centerline. Gaskets shall be shipped separately in suitable protective containers.

E. Valve operators for tapping valves 20-inch and larger shall be located to the right or left (when looking into the mechanical joint outlet end) as ordered by the OWNER.

F. The valves shall be suitable for use with ductile-iron pipe conforming to ANSI/AWWA Standard C151/A21.51-96, "Ductile-Iron Pipe, Centrifugally Cast, for Water", with wall thickness and outside diameter as specified in Tables 3 and 4, (Special Thickness Classes) for the following sizes:

Size	Thickness Class
4-inch	54
6-inch	53
8-inch	52
10-inch and larger	50

and with wall thicknesses and outside diameter as specified in Tables 1 and 2 (Standard dimensions and weights) of the same standard.

Pressure Class Pipe (Potable, Reuse and Raw Water Only)

Size	Pressure Class
4-inch through 12-inch	350
14-inch through 20-inch	250
24-inch	200
30-inch through 48-inch	150

G. All production tests shall be performed on all valves supplied without exception. Operation and hydrostatic tests shall be performed as specified in AWWA C515, latest revision. An Affidavit of Compliance as specified in paragraph two of the "GATE VALVES, GENERAL", section above, shall be furnished if requested to the OWNER prior to installation of the valves. Final payment (installation in donations situations) by the OWNER will not be made until after receipt of these Affidavits of Compliance.

The tapping valves shall conform with the appropriate AWWA valve standard as modified herein and as manufactured by American Flow Control, Mueller or approved equal.

PART 3 - EXECUTION

3.01 GENERAL

All valves shall be installed in accordance with provisions of Section 15100, "Valves, General." Care shall be taken that all valves are well supported.

END OF SECTION

SECTION 15125

PLUG VALVES

PART 1 GENERAL

1.01 SCOPE

A. The Contractor shall furnish and install plug valves, complete and operable, as shown and specified herein, appurtenances, operators, and accessories.

B. Plug Valves 30-inch and larger shall have the actuator installed with a manhole structure. Space limitations may preclude full structures underground.

1.02 RELATED WORK SPECIFIED ELSEWHERE

A. Section 15100, “Valves, General”

1.03 QUALITY ASSURANCE

A. The plug valve manufacturer shall have a line of parts available to support the plug valve furnished to the OWNER. Manufacturers with a history of unsatisfactory performance or discontinuing spare parts shall be disapproved.

PART 2 PRODUCTS

2.01 PLUG VALVE

A. The plug valves shall be of the non-lubricated eccentric type, with resilient faced plugs, and shall be designed for a minimum working water pressure of at least 150 psi for valves through 36-inch. Plug valves located at the discharge end of a pump station shall have a 100 percent port area. Plug valve 6-inch and smaller with an 80 percent minimum port area are acceptable only at locations away from lift stations. **Plug valves 8-inch and larger shall be full opening with 100 percent port area.** Plug valves, 8-inch and smaller shall be designed for operation in a horizontal pipeline with the valve shaft in a vertical position. Plug valves larger than 8-inch shall be designed for operation in a horizontal pipeline, with the valve shaft in a horizontal position and the operating shaft in a vertical position. The plug valves shall be as manufactured by DeZurik, Inc. or approved equal, and shall be the standard product of a manufacturer which has produced and sold such equipment for a period of at least five (5) years. Valves shall be suitable for buried, submerged service.

B. Flanged valves shall have ends plain-faced and drilled conforming to ANSI Standard B16.1, "Cast Iron Pipe Flanges and Flanged Fittings", Class 125. Bolt holes in the flanges shall be equally spaced and shall straddle the vertical and horizontal centerlines. All joint materials for flanged valves will be furnished by others.

C. Mechanical joint valves shall have ends complying with ANSI/AWWA Standard C111/A21.11. "Rubber-Gasket Joints for Ductile Iron Pressure Pipe and Fittings".

Mechanical joint gaskets, glands, tee-head bolts and hex nuts shall be included with the valve. Segmented glands or follower glands held in place by set screws will not be acceptable. Bolt holes in flanges of the mechanical joint shall be equally spaced and shall straddle the vertical centerline. Gaskets shall be shipped separately in suitable protective containers. Valves shall have neoprene gaskets.

D. Plug valve body and plug shall be cast iron conforming to the requirements of ASTM Standard A126, “Gray Iron Castings for Valves, Flanges and Pipe Fittings”, Class B, and all nuts, bolts, springs, washers, and similar component items exposed to the operating fluid shall be AISI Type 316 stainless steel. Resilient plug facing shall be of neoprene.

E. Plug valves shall be furnished with a corrosion-resistant seat consisting of a welded-in overlay of high nickel content on all surfaces contacting the plug face and shall comply with ANSI/AWWA Standard C507, "Ball Valves, 6 In. Through 48 In. (150 mm Through 1200 mm)", Section 3.2.

F. Plug valves shall be furnished with replaceable, sleeve-type AISI Type 316 stainless steel bearings in the upper and lower journals, and shall comply with ANSI/AWWA Standard C507, Section 3.2.

G. Plug valve shaft seals shall be designed for replaceable, manually adjustable, multiple ring "V" or "U" type packing of Buna-N or neoprene. The valves shall be of the bolted-bonnet type and shall comply with ANSI/AWWA Standard C507.

H. Plug valves shall have stops at the fully-opened and fully-closed positions.

I. Plug valves shall be designed for drip-tight shut-off in wet service applications at pressure differentials up the full rating of the valve with pressure in either direction. Plug valves shall be provided with a manual operator sized to suit the maximum differential pressure across the valves. Minimum plug valve operator output torques shall equal or exceed the values specified in the following table:

PLUG VALVE SIZE 150 PSI	REQUIRED ACTUATOR 100 PSI	OUTPUT TORQUE
2"	1,063 FT-LBS	1,438 FT-LBS
14"	1,638 FT-LBS	2,225 FT-LBS
16"	2,213 FT-LBS	3,013 FT-LBS
18"	3,300 FT-LBS	4,500 FT-LBS
20"	4,388 FT-LBS	5,975 FT-LBS
24" (100%)	10,000 FT-LBS	12,790 FT-LBS
30" (100%)	15,875 FT-LBS	19,550 FT-LBS

J. Manufacturer shall supply operators producing larger output torque values if so required by their valves, but in no case shall operator output torque be less than that shown for the particular valve size and pressure.

K. In addition, the operator shall be capable of withstanding an input torque of 300 ft.lbs. on the operating nuts or a pull of 200 pounds on the handwheel without damage to operator components between the input and the stops. Operators on valves 30-inch and larger shall also be equipped with an AWWA input shaft stop.

L. All external ferrous items, except cast iron, shall be hot-dipped galvanized in accordance with ASTM Standard A123, "Zinc (Hot-Galvanized) Coatings on Iron and Steel Products", or ASTM Standard A153, "Zinc Coating (Hot-Dip) on Iron and Steel Hardware", or stainless steel.

M. Manual operators for valves 8-inch and smaller shall be lever actuated unless otherwise specified elsewhere herein.

N. Manual operators for valves 10-inch to 24-inch shall be totally enclosed worm gear type, permanently lubricated, suitable for buried and/or submerged conditions.

O. Manual operators for valves 30-inch and larger shall be totally enclosed worm gear operators, permanently lubricated, suitable for buried and submerged operation, and shall in accordance with ANSI/AWWA Standard C504, with AWWA input shaft stop. Worm Gears shall be constructed in accordance AWWA C517 and shall be IP68 rated for continuous duty to 50ft. Actuators shall be enclosed in a ductile iron housing with outboard seals to protect the bearings and other internal components. The actuator shaft and the quadrant shall be supported on permanently angular contact bearings. Input shaft and fasteners shall be made of stainless steel. Gears shall be efficiency optimized 3 stage gear reduction type. Externally adjustable open and closed position stops shall be provided. The adjustable closed position stop shall be used to set closing torque and provide adjustment to compensate for change in pressure differential or flow direction. The following are approved operators for plug valves 30-inches and larger:

1. Limitorque Type HBC or WG Series modified to MDWASD Standard.
2. Rotork Model IW-RL-MD-RAW

P. The Manual operators (actuators) for valves 30-inch and larger shall have the following:

1. The actuator shaft and the quadrant shall be supported on permanently angular contact bearings. Input shaft and fasteners shall be made of stainless steel. Gears shall be efficiency optimized 3 stage gear reduction type.
2. Stainless steel removable and repositionable drive sleeve.
3. Angular contact bearings to support the worm shaft.
4. 450 Ft pounds of input torque.
5. Adjustable travel stops.
6. Ductile Iron Gear Case.
7. 316 Stainless Steel Position Indicator.
8. 431 Stainless Steel Input Shaft machined from one solid piece of metal.

9. Externally adjustable open and closed position stops shall be provided. The adjustable closed position stop shall be used to set closing torque and provide adjustment to compensate for change in pressure differential or flow direction.
10. Valves and gear actuators for buried or submerged service shall have seals on all shafts and gaskets on the valve and actuator covers to prevent the entry of water. Actuators shall be 90% grease filled. Actuator mounting brackets for buried or submerged service shall be totally enclosed and shall have gasket seals.
11. Test certificates, signed by chief engineer of gear operator manufacturer, must be supplied showing full compliance to AWWA C504/C517 available upon the request of the OWNER.
12. Gears shall have a two-year warranty from date of shipment and shall have a metal tag containing a serial number, ratio; number of turns shall be riveted to the gear for future identification.

Q. Manual operators shall be provided with completely enclosed mounting brackets or adapters. The operators shall be equipped with adjustable stops to prevent overtravel in both the open and closed position with standard 2-inch square operating nuts with skirts as listed elsewhere herein, or with handwheel if for above ground service. All plug valves shall open by turning the operating nut or handwheel counterclockwise. Orient operators with horizontal plug shafts such that the plug rotates upward upon opening.

R. All operator components between the operating nut and the adjustable stops shall be designed to withstand, without damage, an input torque of 300 ft. lbs.

S. The exterior valve surfaces shall be shop painted with two coats of asphalt varnish conforming to Federal Specifications TT-C-434A.

T. Testing: Plug valves shall be tested in accordance with ANSI/AWWA C504, “AWWA Standard for Rubber-Seated Butterfly Valves”, Section 5, Subsection 5.2. The performance test (Subsec. 5.2.1) and hydrostatic test (Subsec. 5.2.3) shall be performed as stated, however the leakage test (Subsec. 5.2.2) shall be performed bidirectionally; first on one side of the valve, and then on the other. The manufacturer shall furnish a certified test report with every valve stating that the valve has met the requirements of the tests.

PART 3 EXECUTION

3.01 GENERAL

A. All valves shall be installed in accordance with provisions of Section 15100, "Valves, General." Care shall be taken that all valves are well supported.

B. The Contractor shall install valves with seats on the downstream side and unless shown otherwise, set valve (above 8-inch size) with the main axis of the plug

horizontal.

C. Inspect a valve fully open and then tightly closed and test the various nuts and bolts for tightness before installation. Take special care to prevent any foreign matter from becoming lodged in or on the valve seat. Any valve that does not operate correctly shall be removed and replaced.

D. The installation of a buried eccentric plug valves shall include the installation of a concrete bearing pad and a ductile iron riser pipe, complete with valve box and cover, set in concrete. The valve operator shall be installed with the AWWA standard 2-in square operating nut supplied by the valve manufacturer, which shall be supported as previously specified and shown on the Plans.

E. After the coupling has been welded to the extension shaft, the weld shall be wire brushed and coated with a Bitumastic.

F. For all quarter-turn plug valves installed, the Contractor shall paint the underside of the valve box cover with red paint.

END OF SECTION

THIS PAGE LEFT INTENTIONALLY BLANK

SECTION 15130

MISCELLANEOUS VALVES

PART 1 GENERAL

1.01 SCOPE

A. The Contractor shall furnish and install miscellaneous valves as required, complete and operable, including all appurtenances and accessories.

1.02 RELATED WORK SPECIFIED ELSEWHERE

A. Section 15100 - Valves, General

PART 2 PRODUCTS

2.01 AIR RELEASE VALVES (MANUAL) AND FLUSHING VALVE OUTLETS

A. The air release valve and flushing valve assemblies shall be installed in accordance with the details shown in the MD-WASD Standard Details. The following products shall be used to construct the assemblies:

Corporation Stops	1-1/2 inch, ballcorp corporation stop, AY McDonald, Ford, Cambridge Brass or approved equal (rating of 300 psi)
Angle Valves for Manual Air Release	2-inch straight ball valve with lever, see Std. Detail WS 1.60
Flushing Valve Outlet Angle Valve	2-inch Bronze angle valve with lever, see Std. Detail WS 1.61
2-inch Schedule 80 PVC	Schedule 80 PVC threaded at both ends

B. Taps into ductile iron pipe for air release and flushing valve assemblies shall be AWWA Tapered thread only, and the Contractor shall provide suitable equipment for this purpose as approved by the Engineer. After the tap has been made, and the corporation stop installed on a pipe conveying potable water, the inside of the pipe around the stop and the exposed exterior surfaces of the stop shall be heavily coated with Carboline Super Hi-Gard 891 White 1898, or approved equal.

C. The installation of air release valves shall include excavation, tapping the ductile iron pipe, corporation stop, angle valve, PVC pipe and fittings, complete with valve boxes and covers, set in concrete, backfilling and compaction, and all other appurtenant items and work in accordance with the MD-WASD Standard Detail WS 1.60.

D. The installation of the flushing valve outlets shall include excavation, tapping the ductile

iron plug, angle valve, PVC pipe and fittings, concrete thrust block, complete with valve boxes and cover, set in concrete, backfilling and compaction, and all other appurtenant items and work in accordance with the MD-WASD Standard Detail WS 1.61.

2.02 SEWAGE AUTOMATIC AIR RELEASE VALVE

A. Sewage automatic air-release valves shall be of the type that automatically releases accumulated air, gas or vapor under pressure during system operation and shall be of the size shown on the approved Plans or Standard Details. The internal mechanism shall be the compound lever type to permit the valve to open under pressure to vent pockets of entrapped air, gas or vapor as they accumulate. The compound mechanism shall be activated by a stainless steel concave float to lift the Buna-N needle or orifice button to control the air release orifice. Linkage shall be stainless steel. The air release valves shall be designed for a maximum working pressure of 150 psi. The valves shall be supplied with a 2-inch stainless steel shut-off ball valve, blow-off assembly and a ½-inch quick-disconnect back flushing connection with shut off valve. The valve shall have a straight flow body with automatic orifice, corrosion resistant internal mechanisms that include a stainless steel float rod and inlets to enable back flushing and drainage.

B. Automatic air release valves (for sewage) are listed in the MD-WASD Pre-Approved Products List Sheet 4.7.

2.03 BRONZE BALL/CORPORATION STOPS, 2 INCHES AND SMALLER, FOR WATER SERVICE

A. Corporation stops shall be bronze with male inlet iron pipe threads and female outlet iron pipe threads and shall conform to AWWA C800. Components in contact with water shall be bronze (ASTM B584, Alloys C89833 or C89836). Components not in contact with water shall be bronze (ASTM B62 or ASTM B584, Alloys C83600, C89833, or C89836). Bronze alloys having a maximum lead content of 0.25%, a maximum zinc content of 7.0%, and a minimum copper content of 80% may be substituted for the bronze alloys specified above. Minimum pressure rating shall be 300 psi. Stops shall be Ford Ballcorp Type FB 1700, A.Y McDonald, or equal. Stops shall have an outlet fitting to adapt from iron pipe thread to copper tubing.

B. Corporation stops are listed in the MD-WASD Pre-Approved Products List Sheet 8.3.

2.04 BRONZE ANGLE METER STOPS FOR WATER SERVICE

A. Angle meter stops shall be bronze and marked NL for no lead. Components in contact with water shall be bronze (ASTM B584, Alloys C89833 or C89836). Components not in contact with water shall be bronze (ASTM B62 or ASTM B584, Alloys C83600, C89833, or C89836). Bronze alloys having a maximum zinc content of 7.0%, and a minimum copper content of 80% may be substituted for the bronze alloys specified above. Minimum pressure rating of the Meter Valve shall be 300 psi.

B. Meter Valves for Water Service are listed in the MD-WASD Pre-Approved Products List Sheet 8.5.

2.05 STAINLESS STEEL BALL VALVES – USED FOR AUTOMATIC AIR RELEASE VALVES

A. Ball valves used for sewer applications shall be stainless steel full port type with threaded NTP ends. The valve shall be designed to ASME B 16.34 with a locking lever. The minimum pressure rating shall be 150 psi. Valve materials shall be as follows: valve body, gland, seat ring, stem, and ball of AISI Type 316 stainless steel. Bushing, packing, seat ring gasket, and seat shall be TFE. Thrust washer shall be glass-filled TFE. Stainless steel ball valve shall be FNW 2PC Full Port 1000 CWP (Ferguson Supply Brand) or approved equal.

2.06 FULL PORT THREADED BRONZE BALL VALVES 2 INCHES AND SMALLER

A. Ball valves, 2 inches and smaller, for water service shall have a pressure rating of at least 600 psi WOG at a temperature of 100°F. Provide full port ball and body design. Valves shall comply with MSS SP-110 and constructed of bronze. Bronze alloys having a maximum lead content of 0.25%, a maximum zinc content of 7.0%, and a minimum copper content of 80% may be substituted for the bronze alloys specified above. Valves shall have threaded ends (ASME B1.20.1), non-blowout stems, and have plastic-coated lever actuators. Provide locking lever handle.

B. Manual air release valves for water shall use a 2-inch straight ball valve with lever.

2.07 PLASTIC BALL VALVE

A. Plastic ball valves shall be used at all PVC pipe installations where required, and be made of polyvinyl chloride (PVC). All valves shall have manual operators, unless otherwise specified or shown.

B. Construction: All plastic ball valves shall have union ends or flanged ends to ANSI B.16.5, class 150, for easy removal. The balls shall have full size ports and Teflon seats. All body seals, union O-ring seals, and stem seals shall be Viton. The valves shall be suitable for a maximum working non-shock pressure of 150 psi at a temperature of 105°F. Body, ball, and stem shall be PVC conforming to ASTM D1784, Type 1, Grade 1. Seats shall be Teflon. O-ring seals shall be Viton. Valve ends shall be of the double-union design. Ends shall be socket welded except where threaded or flanged-end valves are specifically shown in the drawings. Valves shall have handle for manual operation.

C. Suppliers or Equal: NIBCO Inc., (Chemtrol), Watts Regulator Company, ITT Engineered Valves.

2.08 PRESSURE AUTOMATIC AIR RELEASE VALVE

A. The pressure automatic air-release valves shall be installed at locations selected by the Engineer of Record to automatically release accumulated air and other gases with the line under pressure. The internal mechanism shall be the compound lever type to permit the valve to open under pressure to vent pockets of entrapped air or gas as they accumulate. Valve shall be selected with orifice sized for venting at an acceptable discharge rate over the entire pressure range the main will be operated. It shall have sealing faces of an adjustable BUNA-N rubber valve and stainless steel. Valves which use a needle valve to seal the orifice shall not be acceptable. Valve shall have a 2-inch NPT screwed inlet connection and shall have cast iron body with stainless steel float and inner mechanisms. For valves where bolts thread into the housing (i.e. bonnet-to-body bolts), bolts shall be stainless steel. Valves shall be supplied with a 1-inch vacuum check

valve on the outlet to eliminate the possibility of air entering the system when the pressure decreases or if a vacuum is drawn. The valves shall also be supplied with a 2-inch bronze isolation shut-off ball valve.

2.09 SERVICE SADDLES

A. Install service saddles for taps into 6-inch and smaller ductile iron mains. Service pipe saddle shall fit to the maximum O.D. of the saddle's range. When the saddle is used on pipe to the minimum pipe size of the range, the saddle shall extend 180 degrees around the pipe. Straps shall have ends chamfered and be provided with Class 2 fit, National Coarse Threads. Valve gaskets shall be self-sealing neoprene.

B. Saddles are listed in the MD-WASD Pre-Approved Products List Sheet 7.0.

2.10 SMALL PRESSURE REDUCING VALVES (AIR AND WATER)

A. General: Small air and water pressure reducing valves shall be of the spring-loaded diaphragm type with a minimum pressure rating of 250 psi, with bronze body, nickel alloy or stainless steel seat, and threaded ends. Each valve shall be furnished with built-in or separate strainer and union ends.

2.11 GLOBE VALVES

A. The globe valves for pipe 3 inches and smaller shall be handwheel operated, shall have ends threaded to American Tapered Pipe Thread (NPT) Standard, shall be designed for 150-pound working pressure and shall be bronze body equal to Crane Company No. 1, Nibco Inc., or approved equal.

2.12 GATE VALVES (SMALL)

A. Gate valves, smaller than 3-inches in size, unless otherwise noted on the approved Plans, shall be minimum 125 psi, bronze body, double disc, rising stems with heavy duty bronze handwheels. Valve shall have a full bore able to allow passage of a drill of the nominal valve size and be used in place of a corp. stop for tapping the main. James Jones Co. Model J-372, Stockham, Bermaid or approved equal. Ends should be as shown or indicated on the Plans. Each valve shall open by turning the handwheel counterclockwise. Valves shall be designed for at least 125 psi working pressure. Valves with reduced bores or appreciably lighter in weight than those specified will not be acceptable.

B. See Section 15120, "Gate Valves", for gate valves not specified above.

2.13 PRESSURE RELIEF VALVE

A. The pressure relief valve shall maintain constant upstream pressure by by-passing or relieving excess pressure, and shall maintain close pressure limits without causing surges. It shall be adjustable with bronze body and stainless steel trim. Pressure relief valve shall be Cash-Acme type K-10, with a 5 to 75 psi adjustment range, Bell & Gossett, or approved equal.

2.14 BACKFLOW PREVENTER VALVES

A. General: Backflow preventers shall work on the reduced pressure principle. The shall consist of two (2) spring-loaded check valves, automatic differential pressure relief valve, drain valves and shut-off valves. The body material shall be bronze or cast iron for a working pressure of not less than 150 psi, with bronze or stainless steel trim. Drain lines with air gaps shall be provided.

B. See MD-WASD Pre-Approved Products List for backflow prevention devices.

PART 3 EXECUTION

3.01 GENERAL

A. All valves shall be installed in accordance with provisions of Section 15100, "Valves, General." Care shall be taken that all valves in are well supported on each end of the valve.

B. Installation of both manual and automatic air release valves shall be in accordance with the Standard Details.

C. All valves shall be installed in accordance with the Standard Details and manufacturer's recommendations.

D. All air and vacuum release valves installed in pump stations shall have piped outlets to the nearest acceptable drain, firmly supported, and installed in such a way as to avoid splashing and wetting of floors.

END OF SECTION

THIS PAGE LEFT INTENTIONALLY BLANK

SECTION 15330

FIRE HYDRANTS

PART 1 - GENERAL

1.01 SCOPE OF WORK

A. The Contractor shall furnish and install approved fire hydrants and accessories in accordance with the requirements of this Section.

B. Where a new larger main or mains are installed as a part of the work, existing fire hydrants fed by smaller mains shall be connected to the larger main to provide maximum fire flow capability. Such re-connection shall automatically be designed by the Engineer of Record and become part of the plans and project work unless otherwise permitted by the OWNER in writing.

1.02 QUALITY ASSURANCE

A. Codes: Fire hydrants shall conform with the requirements of ANSI/AWWA Standard C502, "Dry Barrel Fire Hydrants" (latest edition), as modified herein; the Miami-Dade County Fire Flow Ordinance and the Miami-Dade County Fire Department.

B. Manufacturer: The hydrants shall be the standard product of a manufacturing firm which has been engaged in the production of fire hydrants for a period of at least five years.

1.03 INFORMATION TO BE FURNISHED BY BIDDER

The Contractor shall furnish four (4) sets of shop drawings for approval showing all the essential features including arrangement and descriptions of parts of the equipment offered.

PART 2 - PRODUCTS

2.01 APPROVED HYDRANTS

The fire hydrants shall be one (1) of the following models approved by the Miami-Dade County Fire Department:

	Model	Manufacturer
1.	A 423 Centurion	Mueller Company
2.	K81-MD (per Kennedy Drawing No. 80783 MD, Rev. 05)	Kennedy Valve
3.	Medallion #F2545	Clow Valve
4.	5-¼" B-84-B	American-Darling Co.

2.02 HYDRANT CHARACTERISTICS

The hydrants shall have the following features:

A. All hydrants shall meet the flow requirements of Section 2-103.21(B), Metropolitan Dade County Code. A certification for compliance with this standard must be available if requested.

B. Type of shutoff shall be compression type closing, with the line pressure, and a minimum 5-1/4-inch valve opening.

C. Barrels - Upper barrel with breakaway-from-lower-barrel feature shall be designed with a breakable safety connection of the flange and collar bolt-connected type joining the two barrels together. Lower barrel shall be of the same material as the hydrant shoe (inlet connection), and shall be designed so that the barrel can be removed from the hydrant shoe when the shoe (and valve) are under pressure. The drain outlets normally provided shall be omitted.

D. Main valve stem - Upper stem shall have breakaway-from-lower-stem feature. Top of the lower stem shall be below the top of the lower barrel to prevent a vehicle tire from depressing the stem and opening the valve, or damaging both lower stem and lower barrel. Stem and seat removal shall be easily accomplished from the upper part of the lower barrel or the upper barrel.

E. Main valve seat ring shall be bronze threaded into a fixed bronze bushing and shall be equipped with upper and lower O-ring seals, the lower of which shall seal against the hydrant elbow.

F. Sealed lubricant reservoir shall provide lubrication to all threaded and bearing surfaces automatically, and shall be located in the bonnet. All hydrants shall be supplied with factory pre-lubrication.

G. Inlet connection - Side inlet, 6-inch mechanical joint.

H. Delivery classification - Two (2) hose and one (1) pump nozzle 18 inches above ground (bury line).

I. Hose and pumper nozzles - Threaded, with O-ring seal, and the nozzle retained by stainless steel screws, or a left hand thread lug, slot and pipe plug lock system.

   Hose nozzle diameter shall be 2-1/2 inches, and threads shall be in accordance with American National Standard.

   Pumper nozzle (Dade County Standard) shall have 4 and ½-inch diameter threads conforming to American National Standard.

J. Bury length shall be as shown on the Plans or specified elsewhere herein.

K. Operating and cap nuts

Operating and cap nuts (Dade County Standard) shall be bronze to bronze, pentagonal, National Standard 1-1/2 inch point to flat, with operating nut weather cap.

L. Stuffing box - O-ring pressure seal.

M. Direction to open shall be counterclockwise.

N. Markings - Hydrants shall be cast marked or outside design shall be such that visible identification can be made as to manufacturer model (type). In addition, all hydrants approved as a "special" or "modified" hydrant shall be cast marked "Dade County, Florida".

O. Color shall be chrome yellow.

P. Harnessing lugs and nozzle cap gaskets will not be required.

Q. Nozzle cap chains will not be required on the "Dade County Standard" hydrants.

2.03 GUARD POST: See Section 15060, under "Pipe and Fittings: Galvanized Steel"

PART 3 - EXECUTION

3.01 INSTALLATION

A. Six-inch branch runs to the fire hydrant shall be constructed in accordance with all applicable portions of Section 15060 "Piping and Fittings", including making thrust resistant joints, installing 6-inch gate valve, tie-rods, riser pipe and valve boxes. Where the distance of any branch run from the main shall be fifty feet or greater, it shall be constructed with 8-inch diameter piping.

B. New fire hydrants and branch runs shall be installed by the Contractor where shown on the Plans and in accordance with the Standard Details herein. Installation of a new fire hydrant shall include excavation, installation of the branch run, installation of the hydrant on the branch run, the concrete anchor at the hydrant elbow, protective concrete slab in non-sidewalk areas, replacing concrete sidewalk when in sidewalk area; steel posts filled with concrete, where required; plastic warning posts where required in FDOT right of way; backfilling and compaction. Fire hydrants shall be touched up or repainted with yellow paint, as specified, where necessary, and the same type of paint shall be used to paint the guard posts after treating the galvanized surface with a neutralizer.

C. Some fire hydrants are factory lubricated, while others require lubrication after installation. The Contractor shall verify which type of hydrant has been furnished hereunder with the Engineer, and if required, shall lubricate each hydrant after its installation and prior to its operation.

D. Lubricating hydrants will be considered as incidental to the hydrant installation, and no extra compensation will be provided for this work. Where existing fire hydrants are removed they shall be cleaned and returned to the OWNER storage yard(s), as directed by the OWNER.

E. Fire hydrants being retired shall be salvaged by excavating the entire hydrant assembly including the bottom shoe. Using caution so as not to damage any component of the hydrant assembly, remove the entire hydrant assembly including the shoe, carefully clean of any thrust block concrete, clean, load, transport, unload and store in a OWNER storage yard as directed by the Engineer. Fire hydrant feed mains shall be cut, plugged and thrust blocked if they are to remain connected to an active main line. Lines which are deactivated (ie not connected to an active main) shall be abandoned or removed as called for on the Plans.

E. Unless otherwise objected by the local municipality or governing agency having jurisdiction over the work, the Contractor shall furnish and install concrete-filled steel guard post in accordance with the Standard Details.

END OF SECTION

APPENDIX A

PERMIT DOCUMENTS

THIS PAGE LEFT INTENTIONALLY BLANK

MUNICIPAL INSPECTION REQUIREMENTS AND RECORD 09/23/2022
MUNICIPAL NO.2022-081599 FOLIO: 0821290000110
JOB SITE ADDRESS 12950 NW 42 AVE
PROPOSED USE GOVERNMENT FACILITIES /WATERMAIN IMPROVEME
LEGAL 29 52 41 2.813 AC M/L S330FT OF E421.33FT OF NE1/4 OF
APPLICATION TYPE REPAIR 0 SQFT 1 UNITS 1 FLOORS
OWNER NAME CITY OF OPA-LOCKA
CONTRACTOR
QUALIFIER
PERMIT TYPE MUNICIPAL BLDG
CATEGORIES 0110 WATER MAIN

DATE: 9/23/2022 PROCESS NUMBER: M2022015198 NEW *AMOUNT PAID 2549.08
FIRE 1000000 ALTERATIONS 2498.57 FIRE 1 WATER MAIN/SI 35.10
FRWK 1 1ST FIRE MINO 85.61 UBS1 1 BLDG 7.5% UPF 1.88
UPMU 25 UPFRONT FEE F 25.00

9/22/2022 10:32 YDENIS 302209220021 CENTRAL 2549.08

MUNICIPAL INSPECTION REQUIREMENTS AND RECORD 09/23/2022
MUNICIPAL NO.2022-081599 PROCESS NO. M2022015198 FOLIO: 0821290000110
JOB SITE ADDRESS 12950 NW 42 AVE
PROPOSED USE GOVERNMENT FACILITIES /WATERMAIN IMPROVEME

REQUIRED INSPECTIONS INIT DATE
FIRE
0110 WATER MAIN
200 FIRE HYDRANTS _____ _____
209 FIRE FINAL _____ _____

MUNICIPAL INSPECTION REQUIREMENTS AND RECORD 09/23/2022
MUNICIPAL NO.2022-081599 PROCESS NO. M2022015198 FOLIO: 0821290000110
JOB SITE ADDRESS 12950 NW 42 AVE
PROPOSED USE GOVERNMENT FACILITIES /WATERMAIN IMPROVEME

TO SCHEDULE A FIRE INSPECTION, PLEASE VISIT THE WEB AT WWW.MIAMIDADE.GOV/BUILDING OR WWW.MIAMIDADE.GOV/FIRE. YOU WILL NEED TO PROVIDE YOUR TEN DIGIT MUNICIPAL INSPECTION NUMBER AND INSPECTION TYPE. THE INSPECTION TYPE CAN BE FOUND ON YOUR INSPECTION REQUIREMENTS AND RECORDS CARD.

IF YOU HAVE ANY QUESTIONS OR CONCERNS REGARDING AN INSPECTION, SCHEDULING A PRELIMINARY INSPECTION, OR LOAD BANK TEST INSPECTION, PLEASE CALL FIRE PREVENTION AT 786-331-4800.

IF YOU HAVE ANY QUESTIONS OR CONCERNS REGARDING A PLAN REVIEW, PLEASE CALL FIRE ENGINEERING AT (786) 315-2771.

**BE ADVISED THIS IS NOT A PERMIT. PERMIT IS TO BE ISSUED BY YOUR CORRESPONDING MUNICIPAL BUILDING DEPARTMENT.

Back to Main Menu

BLDG Home Page | BLDG Main Menu | BLDG Permit Menu | BLDG Plans Processing Menu | Inspection Types | Address Format

Home | About | Phone Directory | Privacy | Disclaimer

E-mail your comments, questions and suggestions to Webmaster
This page was last edited on: February 23, 2004

Web Site © 2004 Miami-Dade County.
All rights reserved.

October 31, 2022

Notification of Acceptance of Use of a General Permit

Permittee:
City of Opalocka Public Works & Utilities
Attn: Airia Austin
12950 NW 42nd Avenue
Opalocka, FL 33054
aaustin@opalockafl.gov

Permit Number**: 131116-054-DSGP**
Date Issued: **October 31, 2022**
Expiration Date: **October 30, 2027**
Project Name: **Miami Gardens Water Main Improvements**
WATER SUPPLIER: **City of Opalocka**
PWS: **4131001**
RER-DERM: **2022-00154**

Dear Mr. Austin:

On October 17, 2022, the Florida Department of Health received a "*Notice of Intent to Use the General Permit for Construction of Water Main Extensions for PWSs*" [DEP No. 62-555.900(7)], under the provisions of Rule 62-4.530 and Chapter 62-555, Florida Administrative Code (F.A.C.). The purpose of the project is replacement of existing Asbestos Cement Pipe (ACP). The proposed project consists of the installation of 5,565 Linear Feet of 8-Inch PVC (C-900) Water Main, 212 Linear Feet of 8-Inch Ductile Iron Pipe Water Main, 151 Linear Feet of 6-Inch Ductile Iron Pipe Water Main, eight (8) fire hydrants, 116 single family service connections, and abandonment of existing AC pipe. In addition, 1,027 Linear Feet of 8-Inch HDPE Water Main will be constructed by Pipe burst (not part of permit request) and water service pipes for commercial properties will be replaced (not part of permit request). The project area is bounded by NW 151st Street to the south, NW 37th Avenue to the west, NW 2nd Avenue to the east, and Biscayne Canal (C-8) to the north, Miami Gardens, FL 33054.

Based upon the submitted Notice and accompanying documentation, this correspondence is being sent to advise that the Department does not object to the use of such general permit at this time. Please be advised that the permittee is required to abide by Rule 62-555.405, F.A.C., all applicable rules in Chapters 62-4, 62-550, 62-555, F.A.C., and the General Conditions for All General Drinking Water Permits (found in 62-4.540, F.A.C.).

The permittee shall comply with all sampling requirements specific to this project. These requirements are attached for review and implementation.

Pursuant to Rule 62-555.345, F.A.C., the permittee shall submit a certification of construction completion [DEP Form No. 62-555.900(9)] to the Department and obtain approval, or clearance, from the Department before placing any water main extension constructed under this general permit into operation for any purpose other than disinfection or testing for leaks.

Within 30 days after the sale or legal transfer of ownership of the permitted project that has not been cleared for service in total by the Department, both the permittee and the proposed Permittee shall sign and submit an application for transfer of the permit using Form 62-555.900(8), F.A.C., with the appropriate fee. The permitted construction is not authorized past the 30-day period unless the permit has been transferred.

This permit will expire five years from the date of issuance. If the project has been started and not completed by that time, a new permit must be obtained before the expiration date in order to continue work on the project, per Rule 62-4.030, F.A.C.

Sincerely,

Samir Elmir, PE, PhD, CEHP
Florida Department of Health
in Miami-Dade County
Division of Environmental Health and Engineering

CC: Enrique Cuellar, RER-DERM, WE-Rev@miamidade.gov
Mohammed Sharifuzzaman, P.E., H.W. Lochner, Inc., msharifuzzaman@hwlochner.com

A Civil Penalty May Be Incurred

if this project is placed into operation before obtaining a clearance from this office.
Requirements for clearance upon completion of projects are as follows:

1) Clearance Form
Submission of a fully completed Department of Environmental Protection (DEP) Form 62-555.900(9) *Certification of Construction Completion and Request for Clearance to Place Permitted PWS Components into Operation*.

2) Record Drawings, if deviations were made
Submission of the portion of record drawings showing deviations from the DEP construction permit, including preliminary design report or drawings and specifications, if there are any deviations from said permit (Note that it is necessary to submit a copy of only the portion of record drawings showing deviations and not a complete set of record drawings.).

3) Bacteriological Results
Copies of satisfactory bacteriological analysis (a.k.a. Main Clearance), taken within sixty (60) days of completion of construction, from locations within the distribution system or water main extension to be cleared, in accordance with Rules 62-555.315(6), 62-555.340, and 62-555.330, F.A.C. and American Water Works Association (AWWA) Standard C 651-92, as follows:

- Connection to an existing system
- The end point of the proposed addition
- Any water lines branching off a main extension
- Every 1,200 feet on straight runs of pipe

Each location shall be sampled on two consecutive days, with sample points and chlorine residual readings clearly indicated on the report. A sketch or description of all bacteriological sampling locations must also be provided.

4) Pressure Test Results
Copy of satisfactory pressure test results demonstrating compliance with AWWA Standard requirements.

5) Asbestos Water Samples Results
Collect asbestos water samples before and after the water main replacement (upstream and downstream) and provide Asbestos water samples results.

Application Number*: 2022005430 Search

Application Details

Application Number 2022005430

Type DR

Created on 5/6/2022 5:32:14 PM

Status Closed

Job Address(es)

NW 33RD CT AND NW 151ST ST BETWEEN AND NW 33RD CT AND NW 151ST ST BETWEEN AND NW 32ND AVE AND NW 151ST ST BETWEEN AND NW 151ST ST AND NW 32ND AVE BETWEEN NW 33RD CT AND

Company Information

Name H.W. Lochner, Inc.

Address 8750 NW 36th Street, Suite 360

City Miami

State FL

Zip 33178

Phone 3055039873

Email msharifuzzaman@hwlochner.com

Alternate Address

City

State

Zip

Alternate Phone

Alternate Email

Contact Name MOHAMMED SHARIFUZZAMAN

Alternate Contact Name

Project Name: Miami Gardens Water Main Improvements

Work Information:

Water Utility Improvements along NW 151st ST (Miami Gardens)(NW 151st ST - County Road)

Revision Log

Date	Name	Action	Approval from	Comments
		Approval Round #: 1		

Date	Name	Action	Approval from	Comments
5/9/2022 10:22:28 AM	GARCIA, JOSE L	Disapproved	PERMIT OFFICE SECTION	Need to upload Water & Sewer plans and PW application .(Design Review application).
		Approval Round #: 2		
5/12/2022 11:31:56 AM	GARCIA, JOSE L	Disapproved	PERMIT OFFICE SECTION	-Need to upload PW permit application .(Design Review application). (See attachment)
		Approval Round #: 3		
6/20/2022 1:05:52 PM	GONZALEZ, HORACIO	Approved as Noted	Pavement Moratorium Review	restoration per r21.1
6/10/2022 9:51:18 AM	GARCIA, JOSE L	Approved as Noted	PERMIT OFFICE SECTION	RESTORATION PER R-21.1

Inspection Results

No Inspections Scheduled.

MOT Schedule

No MOTs Scheduled.

© 2019 Miami-Dade County. All rights reserved.

Miami Gardens
18605 NW 27 Avenue
Miami Gardens, FL 33056

Permit NO. ***ENGR-2022-001161*** *Permit IVR Number:* ***100152***

INSPECTION RECORD

Type: **Engineering**
Workclass: **Sitework**
Permit Status: **Issued**

Issue Date: **12/29/2022** **Expires:** **06/27/2023**

POST ON SITE

Owner's Name: CITY OF OPA-LOCKA **Owner's Phone:**

Job Address: **Total Square Feet:** 69,900

Total Job Valuation: $1,000,000.00

Description: The project scope of work includes construction of 5,565 LF of 8" PVC (C-900) water main, 1,027 LF of 8" HDPE water main, 212 LF of 8" DIP water main, 151 LF of 6" DIP water main, 8 Fire Hydrants, 116 single family residential service connections, replacement of commercial single/double/multi water services, relocation of water services from rear lot easements to front road right-of-way, abandonment of existing ACP pipe and pavement restoration

Inspection Scheduling Code

Inspection	IVR	Comments	Pass	Date
645 - Progress	**645**			
600 - Pre-Construction	**600**			
605 - NPDES	**605**			
610 - MOT	**610**			
615 - Precast	**615**			
620 - Pipeline	**620**			
625 - Forming	**625**			
630 - Sub Base	**630**			
635 - Rock Base	**635**			
640 - Paving	**640**			
699 - Engineering Final	**699**			

Inspections requested after 3pm will be scheduled the second business day. Engineering Inspections, please use phone request line:(305) 622-8044.

Sponsored By: Interim City Manager

RESOLUTION NO. 23-

A RESOLUTION OF THE CITY COMMISSION OF THE CITY OF OPA-LOCKA, FLORIDA, ACCEPTING THE PROPOSAL OF SP PLUS CORPORATION D/B/A SP+ CONSULTING SERVICES TO CONDUCT A FEASIBILITY STUDY TO INSTALL PARKING METERS WITHIN THE CITY, PURSUANT TO RFP NO. 23-0706200 AND FURTHER AUTHORIZING THE INTERIM CITY MANAGER TO ENTER INTO AN AGREEMENT WITH SP PLUS CORPORATION D/B/A SP+ CONSULTING SERVICES FOR SAID SERVICES, IN AN AMOUNT NOT TO EXCEED FORTY-ONE THOUSAND, THREE HUNDRED SEVENTY-FIVE DOLLARS ($41,375.00) AND IN THE FORM ATTACHED HERETO AS EXHIBIT "A" ; PROVIDING FOR ADOPTION OF REPRESENTATIONS; PROVIDING FOR AN EFFECTIVE DATE.

WHEREAS, on June 11, 2023, the City of Opa-Locka ("City") published Request for Proposals (RFP) No. 23-0706200 to obtain consulting services to conduct a Feasibility Study to Install Parking Meters within the City; and

WHEREAS, three (3) sealed proposal was received by the City Clerk's Office and certified by the City Clerk on July 6, 2023; and

WHEREAS, the Evaluation Committee reviewed the proposals and subsequently selected SP Plus Corporation d/b/a SP+ Consulting Services as the most responsive responsible bidder. Staff concluded that based on their industry-leading technology and best-in-class operations, SP Plus Corporation d/b/a SP+ Consulting Services is the most suitable company to render this service and recommends that the City enter into an agreement to conduct the feasibility study and provide a report for the installation of parking meters; and

WHEREAS, SP Plus Corporation d/b/a SP+ Consulting Services proposed Forty-One Thousand, Three Hundred Seventy-Five Dollars ($41,375.00) to conduct the study and provide a report; and

WHEREAS, the City Commission finds that acceptance of SP Plus Corporation d/b/a SP+ Consulting Services' proposal to conduct a Feasibility Study to Install Parking Meters within the City and entering into an agreement with said company is in the best interest of the City of Opa-Locka and its residents.

NOW, THEREFORE, BE IT DULY RESOLVED BY THE CITY COMMISSION OF THE CITY OF OPA- LOCKA, FLORIDA:

SECTION 1. The recitals to the preamble herein are incorporated by reference.

SECTION 2. The City Commission of the City of Opa-Locka, Florida hereby accepts the proposal of SP Plus Corporation d/b/a SP+ Consulting Services relating to Request for Proposals (RFP) 23-0706200, to conduct a Feasibility Study to Install Parking Meters within the City, and authorizes the Interim City Manager to enter into an agreement for same, attached hereto as Exhibit "A", in an amount not to exceed Forty-One Thousand, Three Hundred Seventy-Five Dollars ($41,375.00).

SECTION 3. Sections of this Resolution may be renumbered or re-lettered and corrections of typographical errors which do not affect the intent may be authorized by the City Manager following review by the City Attorney and without need of public hearing, by filing a corrected copy of same with the City.

SECTION 4. This Resolution shall take effect upon adoption and is subject to the approval of the Governor or Governor's Designee.

PASSED and **ADOPTED** this _____ day of _____, 2023.

_____
John Taylor, Mayor

ATTEST:

_____
Joanna Flores, City Clerk

APPROVED AS TO FORM AND LEGAL SUFFICIENCY:

_____
Burnadette Norris-Weeks, P.A.
City Attorney

Moved by: _____

Seconded by: _____

Resolution No. 23-

VOTE:

Commissioner Bass _____

Commissioner Kelley _____

Commissioner Williams _____

Vice Mayor Ervin _____

Mayor Taylor _____

City of Opa-locka
Agenda Cover Memo

City Manager:	Darvin Williams			**CM Signature:**	DocuSigned by: Darvin Williams C48C07C1E8DE492...		
Commission Meeting Date:	*10.25.2023*		**Item Type:** *(Enter X in box)*	**Resolution**	**Ordinance**		**Other**
				X			
Fiscal Impact: *(Enter X in box)*	**Yes**	**No**	**Ordinance Reading:** *(Enter X in box)*		**1st Reading**		**2nd Reading**
	X		**Public Hearing:** *(Enter X in box)*		**Yes**	**No**	**Yes** / **No**
						X	X
Funding Source: *Account#:*	*(Enter Fund & Dept)* Ex: See Financial Impact Section		**Advertising Requirement:** *(Enter X in box)*		**Yes**		**No**
							X
Contract/P.O. Required: *(Enter X in box)*	**Yes**	**No**	**RFP/RFQ/Bid#:**				
	X						
Strategic Plan Related *(Enter X in box)*	**Yes**	**No**	**Strategic Plan Priority Area:**		**Strategic Plan Obj./Strategy:** *(list the specific objective/strategy this item will address)*		
	X		**Enhance Organizational** ☐ **Bus. & Economic Dev** ■ **Public Safety** ☐ **Quality of Education** ☐ **Qual. of Life & City Image** ■ **Communication** ☐				
Sponsor Name	City Manager		**Department:**		City Manager		

Short Title:

A resolution authorizing the Interim City Manager to accept the proposal of SP Plus Corporation for a Feasibility Study to Install Parking Meters pursuant to RFP No. 23-0706200 and further authorizing the Interim City Manager to enter into an agreement with SP Plus Corporation to conduct the feasibility study.

Staff Summary:

A Request for Proposals (RFP) 23-0706200 was issued and published on June 11, 2023. The City was seeking a qualified company to conduct a feasibility study to install parking meters throughout various locations within the City.

On July 6, 2023, the City Clerk received and certified three (3) proposal documents. Staff concluded that based on their industry-leading technology and best-in-class operations, SP Plus is the most suitable company to render this service and wishes to enter into an agreement for them to conduct the feasibility study and provide a report for the installation of parking meters.

Financial Impact: The recommended bidder has proposed a cost of $41,375 to conduct this study. This cost will be charged to Non-Department, Other professional Services (19-519312). This account has a $580,000 budget for FY 24,

Proposed Action:

Staff recommends the City Commission approve the recommendation for SP Plus Corporation and authorize the Interim City Manager to enter into an agreement to conduct the feasibility study for installation of parking meters.

Attachment:

RFP No. 22-0706200
Bid Certification
Bid Proposal

CITY OF OPA-LOCKA
CERTIFICATION

REQUEST FOR PROPOSALS
RFP NO. 23-0706200

FEASIBIITY STUDY TO INSTALL PARKING METERS

I, Joanna Flores, City Clerk of the City of Opa-locka, Florida, do hereby certify that sealed proposals were received and opened at the Opa-locka Municipal Complex, 780 Fisherman Street, 4th Floor, Opa-locka, Florida, at 3:22 p.m. this 6th day of July, 2023.

PROPOSALS RECEIVED

NAME/ADDRESS		LUMP SUM PRICE
1. SP Plus Corporation **444 Brickell, Suite 200** **Miami, FL 33131** **Contact: Don Jones** **Vice President/Regional Manager** **Tele: 305.874.0245** **Email: djones@spplus.com**	Along Ali-baba Ave between 27th Ave and 22nd Ave NW 22nd Ave from Rutland St to Burlington St Along Perviz Ave Intersection of Sharazad Blvd to Ali-baba Ave Along Aladdin St from Ali-baba Ave to Sharazad Blvd Along Salih St to Ahmad St Along Ali-baba Ave from Sharazad Blvd to Ahmad St Along Caliph St **Total**	**$ 9,309.38** **$ 2,068.75** **$ 5,171.88** **$ 3,103.13** **$ 6,206.25** **$10,343.75** **$ 5,171.88** **$41,375.00**
2. Walker Consultants, Inc. **110 SE 6th Street, Suite 1420** **Fort Lauderdale, FL 33301** **Contact: Thomas G. Szubka, CAPP, CPP** **Tele: 813.494.7628** **Email: tszubka@walkerconsultants.com**	Walker Consultants, Inc. proposes to complete the scope of work for a lump sum fee of Thirty-Five Thousand Dollars including all expenses	**$35,000.00**
3. THA Consulting, Inc. **Jim Zullo, President** **40 NW 3rd Street, Suite 1102** **Miami, FL 33128** **Contact: Todd Helmer, CEO** **Tele: 484.342.0200** **Email: thelmer@tha-consulting.com**	Along Ali-baba Ave between 27th Ave and 22nd Ave NW 22nd Ave from Rutland St to Burlington St Along Perviz Ave Intersection of Sharazad Blvd to Ali-baba Ave Along Aladdin St from Ali-baba Ave to Sharazad Blvd Along Salih St to Ahmad St Along Ali-baba Ave from Sharazad Blvd to Ahmad St Along Caliph St	**$ 34,852.00** **$ 34,129.00** **$ 34,129.00** **$ 34,049.00** **$ 34,450.00** **$ 34,571.00** **$ 34,330.00**

Please note that the proposal from SP Plus Corporation was submitted both in person and via Demand Star (e-bid).

I further certify that proposals were submitted and properly opened in the presence of the following:

Junior Bergel
Purchasing
City of Opa-locka

Joanna Flores, CMC
City Clerk
City of Opa-locka

CONSULTING SERVICES

ELECTRONIC COPY

RFP # 23-0706200
Proposal for Parking Feasibility Study to Install Parking Meters
City of Opa-Locka, Florida

Submitted to:

City of Opa-Locka
Office of the City Clerk
780 Fisherman St., 4th Floor
Opa-Locka, Florida 33054

July 6, 2023 by 2:00 p.m.

Our Promise: Making Every Moment Matter for a World on the Go™

CONSULTING SERVICES

RFP # 23-0706200

Proposal for Parking Feasibility Study to Install Parking Meters

City of Opa-Locka, Florida

Submitted to:

City of Opa-Locka
Office of the City Clerk
780 Fisherman St., 4th Floor
Opa-Locka, Florida 33054

Submitted by:

Don Jones
Vice President / Regional Manager
444 Brickell, Suite 200
Miami, FL 33131
Phone: (305) 874-0245
Email: djones@spplus.com

July 6, 2023 at 2:00 p.m.

Our Promise: Making Every Moment Matter for a World on the Go™

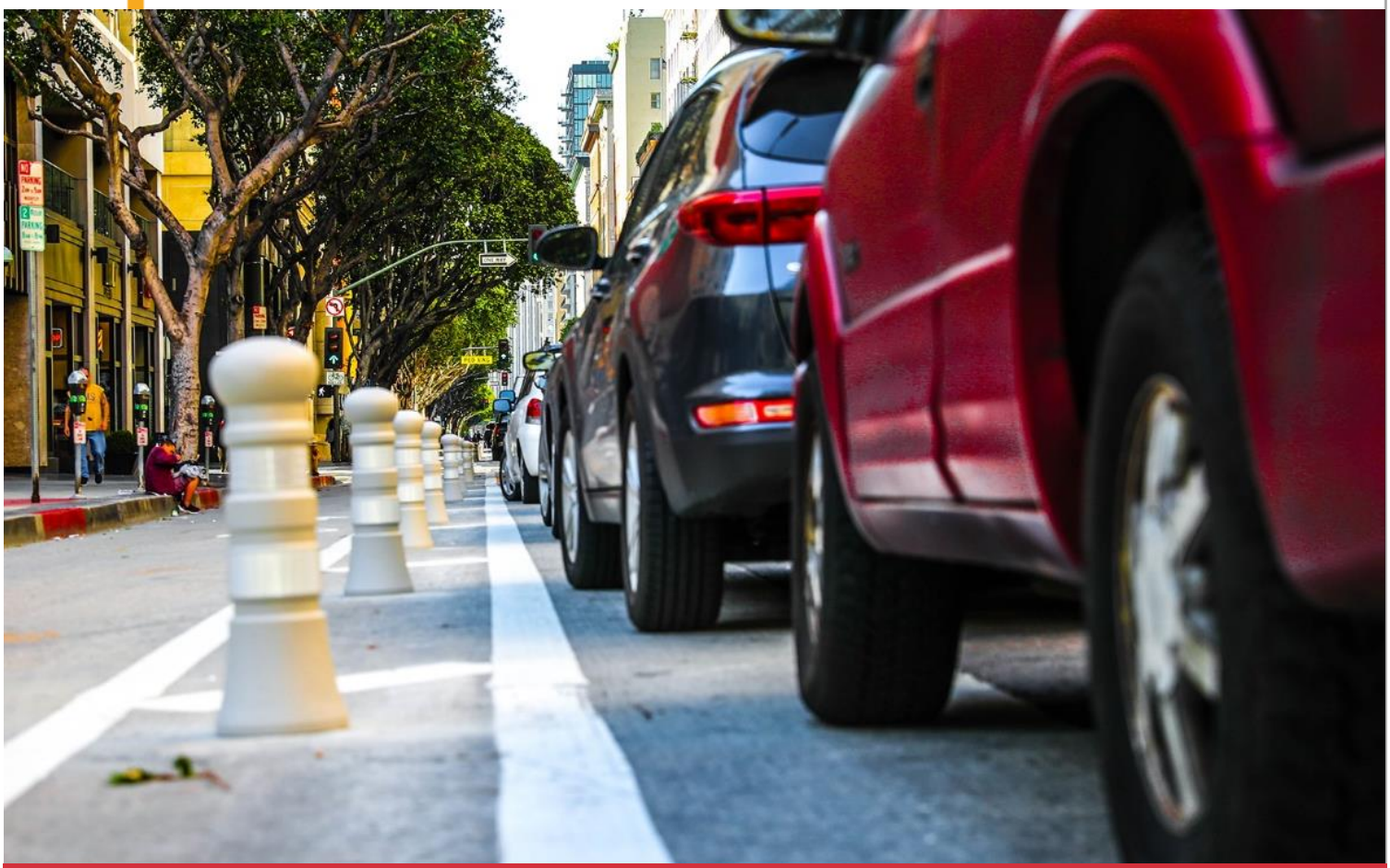

1 Table of Contents

1. Table of Contents

Tab *Page #*

1. Table of Contents **3**

2. Letter of Transmittal **4**

3. General Information **5**

4. Project Approach **8**

5. Experience and Qualifications **11**

6. Schedule **18**

7. Pricing of Services **19**

Ali-Baba Avenue between 27th Avenue and 22nd Avenue 20

NW 22nd Avenue from Rutland Street to Burlington Street 21

Perviz Avenue Intersection of Sharazad Boulevard to Ali-Baba Avenue 22

Aladdin Street from Ali-Baba Avenue to Sharazad Boulevard 23

Salih Street to Ahmad Street 24

Ali-Baba Avenue from Sharazad Boulevard to Ahmad Street 25

Caliph Street 26

8. Required Forms **27**

Proposer Qualifications 27

References 28

Certification Regarding Debarment and Suspension 30

Drug Free Workplace Certification 31

Non-Collusion Affidavit 32

Non-Discrimination Affidavit 33

E-Verify Form 34

9. Additional Information **35**

Legal Comments 35

©2023 by SP Plus Corporation. All rights reserved. No material may be used, reproduced or distributed without the written permission of SP Plus Corporation.

2 Transmittal Letter

SP+ Consulting Services
444 Brickell, Suite 200
Miami, FL 33131

spplus.com | parking.com | bagsinc.com

July 5, 2023

Joanna Flores, CMC
City of Opa-Locka
Office of the City Clerk
780 Fisherman Street, 4th Floor
Opa-Locka, Florida 33054

RE: RFP: 23-0706200 - Proposal for Feasibility Study to Install Parking Meters

Dear Ms. Flores,

SP+ Consulting Services is pleased to respond to the City of Opa-Locka's request for a feasibility study to install parking meters. Our company and its valued employees are industry leaders who have the experience, expertise and commitment to deliver extraordinary service to the City of Opa-Locka and ultimately to the patrons of its parking system. Driving around the City for the pre-bid meeting, I could see the frustration of finding a space along Ali Baba Avenue could have for residents. Our proposal and recommendations are tailored to accomplish the City's stated goals in the RFP.

Unlike most other parking companies, **SP+** maintains its own consulting specific group. The benefits that come from this specialization include an offering of best practices from similar operations around the country and a staff of subject matter experts to cater to your specific needs. **SP+** understands the nuances of on-street enforcement dynamics and can assist in the City's desire to grow and develop. With 35+ operations across the country, no provider has more extensive experience in municipal parking and enforcement than **SP+**.

Accredited Parking Organization

SP+ is the first commercial parking operator to be certified by the International Parking & Mobility Institute (IPMI), formerly the International Parking Institute (IPI), as an Accredited Parking Organization (APO). We are the first parking operator to achieve Accreditation with Distinction, which represents the top 5% of the industry.

The APO program was established in 2015 to set industry standards that develop, ensure, and support a high level of professionalism and competency in parking management. To earn the APO designation, an organization must demonstrate its commitment to ongoing evaluation and improvement of program outcomes throughout its operations.

The benefit of the APO accreditation to the City of Commerce is peace of mind. It is about the confidence in knowing that you have a partner who has demonstrated a higher standard of performance, delivers a proven approach, and operates with sense of pride and a commitment to integrity.

We sincerely appreciate your time and consideration.

Donald Jones
Vice President

3 General Information

3. General Information

1. Name of Business

Our official name is SP Plus Corporation. **(**d/b/a **SP+ Consulting Services).** SP Plus Corporation is a public corporation traded on the NASDAQ exchange under the symbol SP.

2. Mailing Address and Phone Number

- **SP+ Corporate Headquarters**

  Address: 200 East Randolph Street, Suite 7700
  Chicago, Illinois 60601
  Phone: 312-274-2000
  Website: www.spplus.com

- **SP+ Miami Regional Office**

  Contact: **Don Jones**
  Title: Vice President & Regional Manager – Florida & Caribbean
  Address: 444 Brickell Ave., Suite 200
  Miami, FL 33131
  Phone: (305) 874-0245
  Email djones@spplus.com

3. Names and contact information of persons to be contacted for information or services if different from name of person in charge

Alexis Grainger, PE will be the contact person for this proposal and Don Jones will be the contact person for the ongoing operation. Please see below for their full contact information.

Alexis Grainger, PE
Director, Consulting Services
250 West 39th Street, Suite 1500
New York, NY 10018
Phone: (480) 200-2458
Email: agrainger@spplus.com

Don Jones
Vice President & Regional Manager
444 Brickell Ave., Suite 200
Miami, FL 33131
Phone: (305) 874-0245
Email: djones@spplus.com

4. Normal business hours

SP+'s normal business hours are Monday – Friday, 9:00 a.m. – 5:00 p.m.

5. State if business is local, national, or international and indicate the business legal status (corporation, partnership, etc.)

SP Plus Corporation is an international corporation that was originally founded in 1929 as Standard Parking, and has been continually been providing parking management services for 94 years.

6. Give the date business was organized and/or incorporated, and where

SP+ was incorporated in the State of Delaware. The filing date of our Certificate of Incorporation with the Secretary of State of Delaware was on September 24, 1981.

7. Give the location of the office from which the work is to be done and the number of professional staff employees at that office

SP+ has operated locally in the metropolitan Miami area since 1982. We operate a number of facilities in South Florida, as well as operate parking portfolios for real estate owners and managers throughout the country. Our Corporate Headquarters is located in Chicago, Illinois. The day-to-day parking operations within South Florida are supported by our Miami Regional Office.

Miami Regional Office		**Number of Professional Staff**
Address:	444 Brickell Ave., Suite 200 Miami, FL 33131	275 employees
Phone:	(305) 874-0245	

8. Indicate whether the business is a parent or subsidiary in a group of firms/agencies. If it is, please state the name of the parent company

SP Plus Corporation does not have a parent company.

9. State if the business is licensed, permitted and/or certified to do business in the State of Florida and attach copies of all such licenses issued to the business entity

SP+ is in good standing in Florida and has all necessary licenses, permits, certifications, approvals and authorizations necessary to perform all of its obligations in connection with this RFP. We have included our Florida Good Standing Certificate on the following page.

Florida Good Standing Certificate

State of Florida
Department of State

I certify from the records of this office that SP PLUS CORPORATION is a Delaware corporation authorized to transact business in the State of Florida, qualified on February 8, 1982.

The document number of this corporation is 851793.

I further certify that said corporation has paid all fees due this office through December 31, 2023, that its most recent annual report/uniform business report was filed on March 8, 2023, and that its status is active.

I further certify that said corporation has not filed a Certificate of Withdrawal.

Given under my hand and the Great Seal of the State of Florida at Tallahassee, the Capital, this the Twentieth day of April, 2023

Secretary of State

Tracking Number: 3210210479CU

To authenticate this certificate,visit the following site,enter this number, and then follow the instructions displayed.

https://services.sunbiz.org/Filings/CertificateOfStatus/CertificateAuthentication

4 Project Approach

4. Project Approach

Describe in detail the proposal to fulfill the requirements of the scope of services listed in section 2.2 of this RFP.

Task 1: Project Kickoff, Meetings & Coordination

SP+ will prepare for the project by reviewing the existing project information, recent parking studies, and other relevant information provided by the City of Opa-Locka, as well as the scope of study, project schedule, and deliverables. **SP+** will prepare a work plan and schedule to be submitted to the City Manager and/or designated personnel for review and approval prior to initiating the study. The work plan will outline **SP+**'s approach to meeting each of the requirements stated in the Feasibility Study RFP. It will also include provisions for substantial interaction between **SP+** and the City of Opa-Locka during the study, as well as regular opportunities for review of **SP+**'s work by the city to ensure alignment with the objectives

In addition, a project kickoff meeting will be prepared for and attended, via conference call, by representatives of **SP+** Consulting and local area teams. The purpose of this meeting is to finalize the project objectives with the City of Opa-Locka and other stakeholders **SP+** will also prepare for and attend up to two (2) meetings (via conference call) in preparation for and delivery of the summary document. Upon completion of the final report, the team will prepare and deliver a presentation to the City of Opa-Locka commission summarizing findings and recommendations from the parking study.

Task 2: Data Collection

Under this task, **SP+** will manage the data collection efforts to determine existing utilization on-street and verify parking space counts within the City Opa-Locka study area. Data will be collected during the specified high occupancy periods as determined by the client. The data collection area encompasses Ali-Baba Avenue between 27th Avenue and 22nd Avenue on both sides of the street, NW 22nd Avenue from Rutland Street to Burlington Street (East and West), Pervis Avenue intersection of Sharazad Boulevard to Ali-Baba Avenue, Aladdin Street from Ali-Baba Avenue to Sharazad Boulevard, Salih Street to Ahmad Street, Ali-Baba Avenue from Sharazad Boulevard to Ahmad Street; and Caliph Street. This data is anticipated to be collected during the morning and afternoon peak for the weekdays and weekends. This task includes the production of data collection forms, maps, and coaching the persons designated for the data collection efforts. **SP+** will coordinate with the City to ensure that all required data is prepared to be collected, including facility, location, and type of parking needed (such as EV, ADA, etc.). Study area maps will be sent to the City for approval prior to data collection efforts. Supply and Occupancy rates will be determined and included in the summary report.

Throughout the study, **SP+** will keep City Management up to date on the progress of all aspects of the work, ensuring transparency and effective communication.

Task 3: Financial Analysis

SP+ will conduct a desktop review of parking alternatives in the City of Opa-Locka study area. This includes available locations, costs, and types of parking. **SP+** will then conduct an analysis of conversion to paid parking for all complementary parking locations. This includes the preparation of a parking revenue projection for the facilities. The revenue projection (pro forma) includes the following:

- Provide parking revenue forecast based on anticipated volumes of users including existing and proposed
- Determine rates based on market conditions and forecasted increase for project opening
- Determine financial feasibility of parking meters installation and provide an assessment of the potential revenue generation with meters vs. no meters.
- The pro forma will be based on a review of comparable locations in the market

Based on this financial review, **SP+** will provide recommendations on a payment structure for on-street and off-street parking locations to balance demand with return on investment for paid parking locations. These findings will be included in the summary report.

Task 4: Parking Demand Analysis

Using the data collected under Task 2, **SP+** will assess the availability for projected future demand of the Opa-Locka system, especially for proposed new developments. This will be done utilizing a proprietary demand model and conduct a desktop analysis of the impact of the new developments/projects as outlined in Figure 1 of the RFP. The model is founded on the principles within the Urban Land Institute (ULI) *Shared Parking 3rd Edition* including parking demand and seasonality factors. Shared parking analysis is the strategy that determines parking capacity by allowing certain land uses to share parking spaces rather than requiring spaces per individual land use. The ULI factors are established from industry standards accumulated from nationwide parking occupancy studies. **SP+** further refines the ULI standard factors utilizing market knowledge and experience. **SP+** will utilize this demand model to project future peak demand for the City of Opa-Locka study area.

The findings of the parking demand studies will be illustrated in heat maps to identify the areas where additional parking assets will be needed, or where existing parking assets will be stressed under the new developments. A summary report will be prepared with recommendations of ideal users of these assets relative to each metropolitan area, and pricing strategies that are designed to ensure compliance and accessibility for all users.

SP+ will estimate the current parking requirements for each section based on existing conditions, as well as estimate future parking requirements in each section considering current and proposed development projects. This analysis will include projecting parking needs based on anticipated development, stakeholder input, and trends in downtown transportation and development for communities similar to the City of Opa-Locka.

SP+ will assess the projected supply and demand allocation of the project and its impact on parking facilities in the area. This analysis will identify the appropriate capacity and traffic volume for the City of Opa-Locka based on national standards and a database of comparable studies.

Task 5: Study Summary Report and Recommendations

Based on the findings from the feasibility study, **SP+** will prepare a comprehensive study summary report. The report will contain the findings/results of the study, addressing each of the requirements specified in the RFP. It will include data, documentation, and references supporting the findings, as well as appropriate text, tabulations, and illustrations to convey a clear and unambiguous understanding of the results, conclusions, and recommendations. As **SP+** is not only a consultant but also an operator, we have extensive hands-on experience with a variety of technology solutions. This allows us to provide the best solutions for meeting parking needs as well as facilitating the parking experience that stakeholders desire to have for their patrons. As part of the implementation process, we will put together a proposed operations plan. This includes suggested management approach, parking meter feasibility, staffing requirements (as needed), cost analysis, and other relevant information.

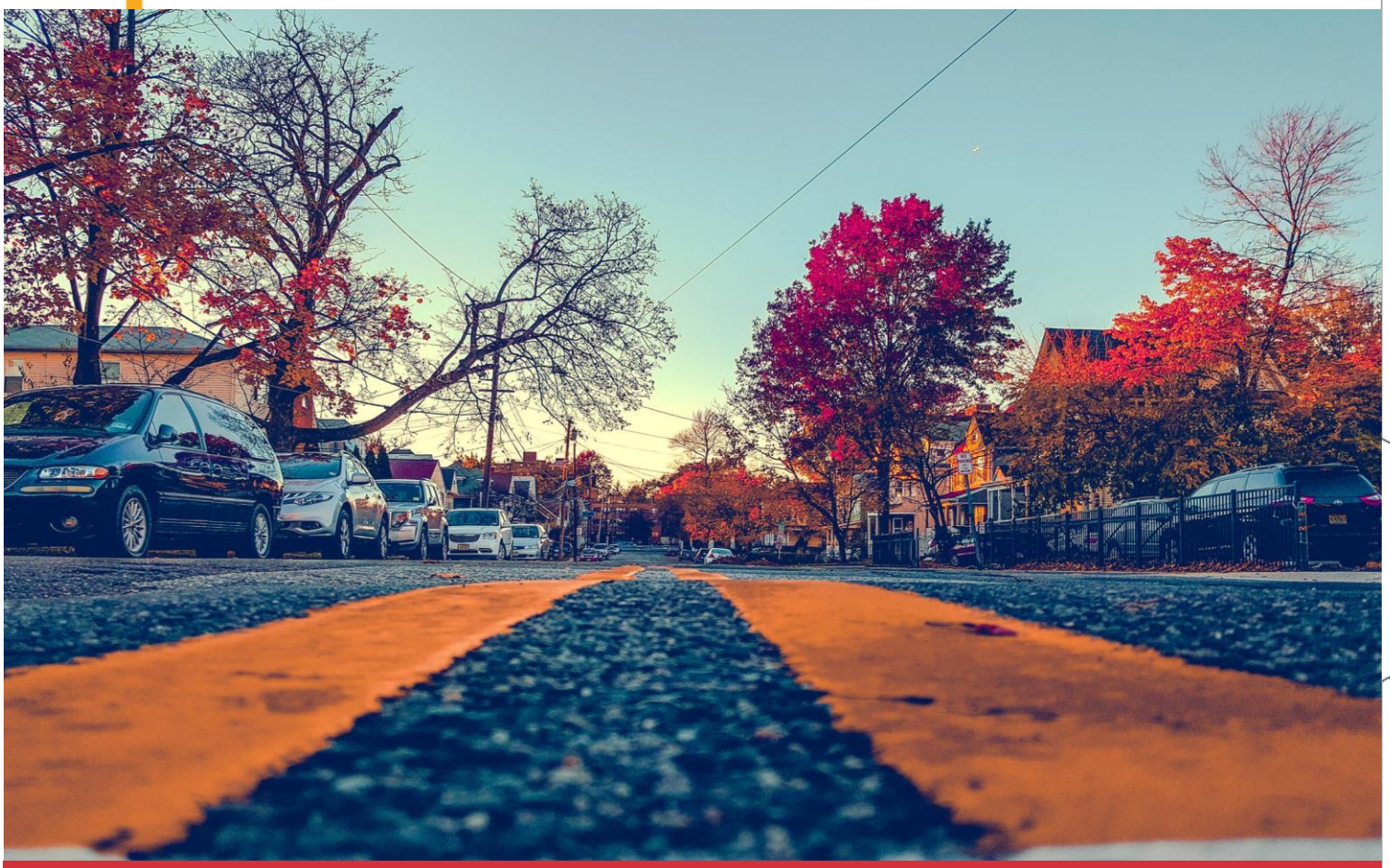

5 Experience & Qualifications

5. Experience and Qualifications

3.2.6.1 Specify the number of years the Proposer has been in business.

Description of the Firm and Qualifications

Company Background

SP Plus Corporation is an international corporation that was originally founded in 1929 as Standard Parking, and has been continually been providing parking management services for 94 years.

SP Plus Corporation (NASDAQ: SP) facilitates the efficient movement of people, vehicles, and personal belongings with the goal of enhancing the consumer experience while improving bottom line results for our clients. SP+ provides professional parking management, ground transportation, remote baggage check-in and handling, facility maintenance, security, event logistics, and other technology-driven mobility solutions to aviation, commercial, hospitality, healthcare, and government clients across North America.

SP+ operating groups include:

- **SP+ Airport Services**
- **SP+ GAMEDAY**
- **SP+ Healthcare Services**
- **SP+ Hospitality Services**
- **SP+ Municipal Services**
- **SP+ Office Services**
- **SP+ Residential Services**
- **SP+ Retail Services**
- **SP+ University Services**

SP+ service lines include:

- **SP+ Event Logistics**
- **SP+ Facility Maintenance**
- **SP+ Parking**
- **SP+ Security Services**
- **SP+ Transportation**
- **SP+ Consulting**
- **Bags**

Company History and Core Values

SP Plus Corporation was originally founded in Chicago, Illinois, in 1929 as Standard Parking. Starting with one downtown parking lot, we soon expanded to numerous locations including hotels and medical centers. In the 1950s, we started the first paid airport parking operation at Cleveland Hopkins International Airport. In the late 1970s, Standard Parking started a rapid expansion program that made it a national company. In 2013, Standard Parking Corporation merged with

Central Parking Corporation, creating SP Plus Corporation, one the largest full-service mobility solutions firms in North America with operations in the U.S., Puerto Rico and Canada.

We're built on integrity and innovation, laser-focused on delivering the highest level of service to our customers and clients. We've set the industry standard in integrating new technologies, online interactive marketing programs, parking amenities and customer service programs, revenue control, financial reporting, expense containment, employee professionalism, and proactive management. Our operations maximize facility profitability while at the same time making parking a first-class, enjoyable experience. As a public company subject to the requirements of the Securities Exchange Act of 1934 and the Sarbanes-Oxley Act, we adhere to accounting, internal control and reporting standards that are more rigorous than those typically followed by our nonpublic competitors.

We invite you to visit www.spplus.com to learn more.

SP+ Corporate Footprint

SP+ operates in major markets across North America including 46 states, the District of Columbia, Puerto Rico and four Canadian provinces.

SP+ is an Accredited Parking Organization

2023-25 ACCREDITED PARKING ORGANIZATION® WITH DISTINCTION

The International Parking & Mobility Institute (IPMI) has recognized **SP+** as the first commercial parking operator to earn the Accredited Parking Organization (APO) with Distinction designation. This designation is reserved for the top 5% of parking organizations worldwide that demonstrate a comprehensive standard of excellence in our industry.

SP+ Recognized as the Innovative Organization of the Year

SP+ has been selected as the "Innovative Organization of the Year" by the National Parking Association (NPA). **SP+** was recognized for the development and deployment of Sphere™, its cutting-edge suite of technology products designed to drive end-to-end mobility at parking or transportation facilities—from customer acquisition and purchases to operational logistics and data reporting.

SP+ Names One of America's Best Small Companies

Forbes screened more than 1,000 companies with a market value between $300 million and $2 billion to identify 541 companies that had positive sales growth over the past 12 months and a share price of at least $5. The ranking is based on earnings growth, sales growth, return on equity and total stock return for the latest 12 months and over the last five years, with more weight given to the latest year's data.

Similar Services for Municipal Governments

Working closely with municipalities through the parking privatization process, our **SP+ Municipal Services Division** helps cities achieve their parking objectives without straining public resources or sacrificing customer service.

With the most experienced team of municipal parking experts in the country, we handle everything from parking facility planning to turn-key municipal parking operations. We specialize in providing a comprehensive set of on-site municipal parking management services that include staffing and training, revenue management, technology integration, and marketing programs—each of which are accompanied by stringent accounting and revenue control practices and procedures.

Working as consultants, our team of experts can provide parking layout recommendations that minimize traffic, reduce carbon emissions, and utilize energy-efficient technologies. For existing facilities, we can design and install graphics, lighting, and signage, and assist with the procurement of automated traffic and revenue control equipment. We can also provide financing for city equipment purchases.

The SP+ Municipal Services Division

The City and the on-site parking operation team will receive the full support of the **SP+ Municipal Services Division**. Going beyond daily operational support, the City can expect the highest level of responsiveness, guidance and backing from the industry's most experienced and well-versed team of dedicated on-street parking professionals.

A partnership with **SP+** means linking the City's parking operation to our 50+ municipal parking operations across 34 states. No other provider has a municipal parking specific team working across regions to:

- Stay at the forefront of implementing new technology
- Ensure best practices and policies are in place location to location
- Share knowledge while developing future municipal parking leaders
- Provide experience and guidance on new initiatives and projects
- Maintain accountability through teamwork

Simply put, no other parking management company can provide a resource with more project management experience, operational capability, accountability, and progressive thinking in on-street parking management than the **SP+ Municipal Services Division**. In their tenure as parking professionals, members of the **SP+ Municipal Services Division** have worked with the following municipalities to develop, operate, and guide their parking programs:

Consulting Services Division

SP+ Consulting Services provides efficient parking and transportation solutions guided by emerging industry trends and best practices. We are diversified in the types of services that we administer to accommodate various vertical markets.

Committed to incorporating the most progressive results, we take an integrated approach to best meet each client's needs. Our team of experienced and qualified professionals continuously seek opportunities for enhancements and changes that both improve levels of service and boost net income for clients.

The following is a list of services that the SP+ Consulting Services division offers:

- Parking
  - Parking Demand Study
  - Financial Assessment and Review
  - Operational Plan
  - Signage Plan
- Traffic
  - Traffic Plan
  - Signage Plan
  - Mobility Management
  - Rideshare Operational Plan
  - Queuing Model and Study
- Pedestrian
  - Pedestrian Plan
  - Signage Plan

SP+'s Technology Experience and Working Partnerships

Access to Right Fit Technology Solutions

Across our significant, national municipal management footprint, the **SP+ Municipal Services Division** has successfully partnered with and utilized every leading parking payment technology provider on the market, including all enforcement technologies available. For any current or future technology chosen to be deployed in the City of Opa-Locka parking facilities, we have the in-house expertise to assist with procurement, integration implementation, training, site-specific reporting, and successful utilization within the operations. The following are a few of the many technology partners we are currently working with in other markets:

Key Personnel

3.2.6.2 Identify the Proposer's qualifications to perform the services identified in this RFP as listed in section 2-2 of the Scope of Services.

SP+ Project Team

SP+ is the best partner for the job due to the dedication and experience of both our local and national teams. We operate with the resources of a large firm but with the approach of a local one. Our local operation team and our in-house Engineer will lead this project.

Consulting Services Division

The **SP+** Consulting Services team will be available to begin the City of Opa-Locka Parking Feasibility Study as soon as notice to proceed is transmitted. **SP+** is committed to working with the City to ensure the project is completed to the specifications of the Client and key stakeholders.

Alexis Grainger, PE – *Director of Consulting Services, New York City, NY*

The Consulting Services Division is led by **Alexis Grainger, PE**. As the Director of Consulting Services for **SP+**, Alexis specializes in multi-modal transportation planning and traffic operations. She is responsible for leading the consulting efforts nationwide for the firm. Her specialized skill set aids in the blending of operations and planning that assists in making our projects so successful. Alexis will lead the project remotely from the Northeast. Alexis will be the Project Manager in charge of this project and the City of Opa-Locka primary contact.

She has 8+ years of experience in Traffic Engineering, previously working for Kimley-Horn and Associates, as well as the Arizona Department of Transportation. Since joining **SP+** in 2019, **SP+** has taken part in over 200 projects across the United States. Alexis is well versed in traffic and pedestrian analyses and proficient in demand analyses, functional design reviews, and traffic simulation software technologies.

Mari Schwabacher, Technical Analyst

Mari is an Urban and Regional Planning professional with over five years of experience working in environmental and transportation planning. She started her career as a Park Planner for the Florida Parks Services (FPS) followed by almost five years working as a Transportation Planner for the Florida Department of Transportation (FDOT). Right before joining **SP+** she worked for the transportation team at Kimley-Horn and Associates where she assisted in the development of regional mobility and safety plans, traffic studies, crash data analysis, as well as contributing to projects through the use of ArcGIS and AutoCAD. Mari will be the Technical Analyst for this project. Mari will be contributing to the project remotely from Northeast Florida.

Education:
Bachelor of Arts (2017), Florida State University
International Affairs, Concentration in Urban and Regional Planning

Relevant Projects:

- North Florida TPO, 2022 Regional System Safety Plan, Jacksonville, FL
- North Florida TPO, US 17 Green Cove Springs Corridor Study, Green Cove Springs FL
- North Florida TPO, Blue Zones Study- Traffic & Crash Analysis, Jacksonville, FL
- Gainesville TPO, 2045 Long Range Transportation Plan Update, Gainesville, FL
- Florida Parks Service, Yellow Bluff State Park Unit Management Plan Update, Jacksonville, FL
- Florida Parks Service, Tallahassee - St. Marks Historic Railroad Trail State Park, St. Marks, FL

Key Local Personnel

Jason Spoeth, CAPP - *Senior Vice President of Southeast Operations*

Jason currently serves as our SVP of Southeast Operations and is responsible for Business Development and Operations in Alabama, Arkansas, Florida, Georgia, Louisiana, Mississippi, North Carolina, Puerto Rico, and South Carolina. Jason has experience within a variety of parking niches such as Class A Office, Five Star Hotel, Healthcare, University, Municipal and large scale Special Events.

- 25+ years of Parking Management Experience
- Bachelor's Degree from the University of Florida
- Certified Administrator of Public Parking (CAPP) through the International Parking Institute
- Member of the Parking Association of Georgia & the Mid-South Parking Association

Donald J. Jones – *Vice President*

Donald Jones joined the **SP+** team in 2005 and has direct responsibility for the operational, financial and marketing functions for the Commercial / Retail Division for South Florida and Puerto Rico. Don was previously responsible for a portfolio of thirty parking facilities in the Chicago Region. During his tenure he provided direct oversight for several Class A garage and shuttle operations including, 900 North Michigan Self Park, Aon Center, Aon / Prudential Shuttle, Greenway Self Park, and 353 North Clark's garage and shuttle operations. Don's operational experience has been primarily in commercial office and mixed-use facilities, specializing in commuter shuttle operations.

- 23+ years of parking management experience
- Bachelor's in Business Administration from Benedictine University in Lisle, Illinois

6 Schedule

6. Schedule

3.2.7.1 Include a timetable that identifies the amount of time required to complete each component of the Program.

3.2.7.2 Indicate the earliest available start date for Proposer's project team.

3.2.7.3 Indicate the project completion date based on the date provided in 3.2.7.1.

SP+ is anticipating the project duration to be approximately six (6) months. Project coordination and kick-off will begin as soon as notice to proceed is given, and it is anticipated to last two to three weeks. It is **SP+**'s understanding that the peak demand in comparable cities occurs through fall and winter, with peak occupancy occurring in the afternoons. Our team anticipates to collect data during peak demand times through October and November. Specific dates and time and duration of data collection efforts will be determined during project kick-off. The Parking Demand Analysis will be conducted once Data Collection is completed, also in November-December. The final report is expected to be finalized and presented to client by February 2024. This timeline and schedule is subject to change and will be finalized with client during project kick-off.

Tasks	Description of Work	Timing
1: Project Kickoff, Meetings & Coordination	Kick-off meeting and project planning	September
2: Data Collection	Gather data, review existing conditions and resources	October-November
3. Revenue Analysis	Conduct financial analysis	November- December
4: Parking Demand Analysis	Project supply and demand to identify impact and parking needs	November- December
5: Study Summary Report & Recommendations	Produce written summary report with findings & presentation	January- February

7 Pricing

7. Pricing of Services

3.2.8.1 Fee basis should be an all-inclusive, base fee.

The fee per task as outlined in the proposed scope of services can be found below. To meet the requirements of the RFP and provide pricing per section of study area, the lump sum has been divided by approximate percentage of study area for each study section.

The all-inclusive, lump sum fee (inclusive of travel expenses) is $41,375.

	Task	PE	FEE	TA	FEE	Sr. LR	FEE	Data Collection	FEE	Total Hours	Total Fee	Expense	Total Fee
1	Project Kickoff, Meetings & Coordination	10	$ 2,000.00	25	$ 3,750.00	10	$ 1,750.00	0	$ -	45	$ 7,500.00		$ 7,500.00
2	Data Collection	10	$ 2,000.00	20	$ 3,000.00	10	$ 1,750.00	120	$3,000.00	160	$ 9,750.00	$ 6,000.00	$ 15,750.00
3	Comprehensive Parking Analysis	10	$ 2,000.00	40	$ 6,000.00	10	$ 1,750.00	0	$ -	60	$ 8,000.00		$ 8,000.00
4	Public Engagement	10	$ 2,000.00	20	$ 3,000.00	10	$ 1,750.00	0	$ -	40	$ 5,000.00		$ 5,000.00
5	Study Summary Report & Recommendations	10	$ 2,000.00	15	$ 2,250.00	5	$ 875.00	0	$ -	30	$ 5,125.00		$ 5,125.00
	Maximum Hours	**50**	**$ 10,000.00**	**120**	**$18,000.00**	**45**	**$ 7,875.00**	**120**	**$3,000.00**	**335**	***$ 35,375.00***	***$ 6,000.00***	***$ 41,375.00***

The pricing by study section is as follows:

Study Section	%	Fee
Ali-Baba Avenue between 27th and 22nd Ave	22.5%	$9,309.38
NW 22nd Ave from Rutland St to Burling St	5.0%	$2,068.75
Perviz Avenue Intersection of Sharazad Blvd to Ali-Baba A	12.5%	$5,171.88
Aladdin St from Ali-Baba Ave to Sharazard	7.5%	$3,103.13
Along Salih St to Ahmad St	15.0%	$6,206.25
Ali-Baba Avenue from Sharazard Blvd to Ahmad St	25.0%	$10,343.75
Along Caliph St	12.5%	$5,171.88
Total	**100.0%**	**$41,375.00**

RFP NO: 23-0706200

PRICE PROPOSAL FORM

FEASIBILITY STUDY TO INSTALL PARKING METERS ALONG ALI-BABA AVENUE BETWEEN 27TH AVENUE AND 22ND AVENUE (BOTH SIDES OF THE STREET)

If Proposer fees will be paid by City, Proposer understands and agrees that the Contract Price is the lump sum to furnish and install all of the Work complete in place. Vendor's price will not be adjusted unless the City changes the scope of the Project after the Contract Date.

As such, the Vendor shall furnish all labor, materials, equipment, tools, supervision and services necessary to provide a complete, in place Project for the Proposed Price of:

LUMP SUM PRICE: $ 9,309.38

SUBMITTED THIS 6th DAY OF July 2023.

BID SUBMITTED BY:

SP Plus Corporation
Company

(305) 874-0245
Telephone Number

Don Jones
Name of Person Authorized to Submit Bid

N/A.
Fax Number

Signature

DJones@spplus.com
Email Address

Vice President
Title

RFP NO: 23-0706200

PRICE PROPOSAL FORM

FEASIBILITY STUDY TO INSTALL PARKING METERS NW 22ND AVENUE FROM RUTLAND STREET TO BURLINGTON STREET (EAST AND WEST SIDE)

If Proposer fees will be paid by City, Proposer understands and agrees that the Contract Price is the lump sum to furnish and install all of the Work complete in place. Vendor's price will not be adjusted unless the City changes the scope of the Project after the Contract Date.

As such, the Vendor shall furnish all labor, materials, equipment, tools, supervision and services necessary to provide a complete, in place Project for the Proposed Price of:

LUMP SUM PRICE: $ 2,068.75

SUBMITTED THIS 6th DAY OF July 2023.

BID SUBMITTED BY:

SP Plus Corporation
Company

(305) 874-0245
Telephone Number

Don Jones
Name of Person Authorized to Submit Bid

N/A.
Fax Number

Signature

DJones@spplus.com
Email Address

Vice President
Title

RFP NO: 23-0706200

PRICE PROPOSAL FORM

FEASIBILITY STUDY TO INSTALL PARKING METERS ALONG PERVIZ AVENUE INTERSECTION OF SHARAZAD BOULEVARD TO ALI-BABA AVENUE

If Proposer fees will be paid by City, Proposer understands and agrees that the Contract Price is the lump sum to furnish and install all of the Work complete in place. Vendor's price will not be adjusted unless the City changes the scope of the Project after the Contract Date.

As such, the Vendor shall furnish all labor, materials, equipment, tools, supervision and services necessary to provide a complete, in place Project for the Proposed Price of:

LUMP SUM PRICE: $ 5,171.88

SUBMITTED THIS 6th DAY OF July 2023.

BID SUBMITTED BY:

SP Plus Corporation
Company

(305) 874-0245
Telephone Number

Don Jones
Name of Person Authorized to Submit Bid

N/A.
Fax Number

Signature

DJones@spplus.com
Email Address

Vice President
Title

RFP NO: 23-0706200

PRICE PROPOSAL FORM

FEASIBILITY STUDY TO INSTALL PARKING METERS ALONG ALADDIN STREET FROM ALI-BABA AVENUE TO SHARAZAD BOULEVARD

If Proposer fees will be paid by City, Proposer understands and agrees that the Contract Price is the lump sum to furnish and install all of the Work complete in place. Vendor's price will not be adjusted unless the City changes the scope of the Project after the Contract Date.

As such, the Vendor shall furnish all labor, materials, equipment, tools, supervision and services necessary to provide a complete, in place Project for the Proposed Price of:

LUMP SUM PRICE: $ 3,103.13

SUBMITTED THIS 6th DAY OF July 2023.

BID SUBMITTED BY:

SP Plus Corporation
Company

(305) 874-0245
Telephone Number

Don Jones
Name of Person Authorized to Submit Bid

N/A.
Fax Number

Signature

DJones@spplus.com
Email Address

Vice President
Title

RFP NO: 23-0706200

PRICE PROPOSAL FORM

FEASIBILITY STUDY TO INSTALL PARKING METERS ALONG SALIH STREET TO AHMAD STREET

If Proposer fees will be paid by City, Proposer understands and agrees that the Contract Price is the lump sum to furnish and install all of the Work complete in place. Vendor's price will not be adjusted unless the City changes the scope of the Project after the Contract Date.

As such, the Vendor shall furnish all labor, materials, equipment, tools, supervision and services necessary to provide a complete, in place Project for the Proposed Price of:

LUMP SUM PRICE: $ 6,206.25

SUBMITTED THIS 6th DAY OF July 2023.

BID SUBMITTED BY:

SP Plus Corporation
Company

(305) 874-0245
Telephone Number

Don Jones
Name of Person Authorized to Submit

N/A.
Fax Number

Signature

DJones@spplus.com
Email Address

Vice President
Title

RFP NO: 23-0706200

PRICE PROPOSAL FORM

FEASIBILITY STUDY TO INSTALL PARKING METERS ALONG ALI-BABA AVENUE FROM SHARAZAD BOULEVARD TO AHMAD STREET

If Proposer fees will be paid by City, Proposer understands and agrees that the Contract Price is the lump sum to furnish and install all of the Work complete in place. Vendor's price will not be adjusted unless the City changes the scope of the Project after the Contract Date.

As such, the Vendor shall furnish all labor, materials, equipment, tools, supervision and services necessary to provide a complete, in place Project for the Proposed Price of:

LUMP SUM PRICE: $ 10,343.75

SUBMITTED THIS 6th DAY OF July 2023.

BID SUBMITTED BY:

SP Plus Corporation
Company

(305) 874-0245
Telephone Number

Don Jones
Name of Person Authorized to Submit

N/A.
Fax Number

Signature

DJones@spplus.com
Email Address

Vice President
Title

RFP NO: 23-0706200

PRICE PROPOSAL FORM

FEASIBILITY STUDY TO INSTALL PARKING METERS ALONG CALIPH STREET

If Proposer fees will be paid by City, Proposer understands and agrees that the Contract Price is the lump sum to furnish and install all of the Work complete in place. Vendor's price will not be adjusted unless the City changes the scope of the Project after the Contract Date.

As such, the Vendor shall furnish all labor, materials, equipment, tools, supervision and services necessary to provide a complete, in place Project for the Proposed Price of:

LUMP SUM PRICE: $ 5,171.88

SUBMITTED THIS 6th DAY OF July 2023.

BID SUBMITTED BY:

SP Plus Corporation
Company

(305) 874-0245
Telephone Number

Don Jones
Name of Person Authorized to Submit

N/A.
Fax Number

Signature

DJones@spplus.com
Email Address

Vice President
Title

8 Required Forms

Proposer Qualifications

RFP NO. 23-0706200
PROPOSER QUALIFICATIONS

FEASIBILITY STUDY TO INSTALL PARKING METERS

The Proposer, as a result of this proposal, MUST hold a County and/or Municipal Contractor's Occupational License in the area of their fixed business location. The following information MUST be completed and submitted with the proposal to be considered:

1. Legal Name and Address:

   Name: SP Plus Corporation

   Address: 444 Brickell, Suite 200

   City, State, Zip: Miami, FL 33131 Phone/Fax: (305) 874-0245

2. Check One: Corporation (✓) Partnership ( ) Individual ( )

3. If Corporation, indicate:
   Date of Incorporation: 9/24/1981 State in which Incorporated: Delaware

4. If an out-of-state Corporation, currently authorized to do business in Florida, give date of such authorization: 2/8/1982

5. **Name and Title of Principal Officers** **Date Elected:**

Marc Baumann	President and CEO
Christopher Sherman	President, Commercial Division
James F. Buczek	Chief Operations Officer
Kris Roy	Chief Financial Officer

6. The length of time in business: 94 years

7. The length of time (continuous) in business as a service organization in Florida: 41 years

8. Provide a list of at least three commercial or government references that the bidder has supplied service/commodities meeting the requirements of the City of Opa-locka RFP during the last twenty-four months. Our references are included on the following pages.

9. A copy of County and/or Municipal Occupational License(s)

Note: *Information requested herein and submitted by the Proposers will be analyzed by the City of Opa-locka and will be a factor considered in awarding any resulting contract. The purpose is to insure that the Contractors, in the sole opinion of the City of Opa-locka, can sufficiently and efficiently perform all the required services in a timely and satisfactory manner as will be required by the subject contract. If there are any terms and/or conditions that are in conflict, the most stringent requirement shall apply.*

Our Florida Certificate of Good Standing is included on the following pages.

References

City of Gainesville, Downtown Parking Study

Contact: Ms. Jessica Krauszer
Administrative Service Manager,
Transportation Department
City of Gainesville, Florida
Email: krauszerjn@gainesvillefl.gov

Scope of Work: **SP+** was retained by the City of Gainesville to perform a review of the existing and future parking demand in the Downtown Gainesville area. Scope of Services included:

- Documented existing parking resources, provided inventory of project assets (on street and off-street), and provided assessment of existing parking resource utilization.
- Conducted stakeholder engagement reviews.
- Determined peak demand of spaces and peak hours for proposed land use sizes, hours of operations, and occupancy.
- Projected a financial forecast model evaluating revenue and operating budget based on anticipated volume of users, proposed rates based on market conditions and expenses based on operation type most suitable for the facilities.
- Provided operational recommendations based on site visit observations.

City of Homestead, Parking Program Analysis and Recommendations

Contact: Ms. Cate McCaffrey, City Manager
` City of Homestead, Florida
Email: cmccaffrey@cityofhomestead.com

Scope of Work: **SP+** was retained by the City of Homestead to conduct an analysis of the City's parking assets and formulate recommendations. Services included the following tasks:

- Reviewed Parking District Boundary
- Created revenue and expense projections
- Determined the proper legal framework to initiate a parking enforcement program
- Reviewed technology alternatives for on-street, off-street and mobile parking apps
- Conducted a review of marketing and branding including regulatory signage requirements, program branding recommendations and customer and stakeholder communication recommendations
- Provided operational recommendations including staffing, rates, and enforcement
- Conducted a stakeholder review process

Downtown Doral, Florida, Parking Program Evaluation

Contact: Monique Bardino, RPA, Senior Property Manager
Phone: (305) 592-0681
Email: mbardino@codina.com

Scope of Work: **SP+** was retained by Codina Partners in 2019 to provide an evaluation of the existing parking management program, capacity, utilization, and impact on economic development for Downtown Doral, Florida. Services included the following:

- Documented existing parking resources, provided inventory of assets (on-street and off-street), and provided assessment of existing parking resource utilization.
- Assessed Downtown parking facilities from an operations perspective. This included assessments of customer service, revenue control and collections, enforcement, maintenance, and overall management.
- Assessed existing technology and recommended system upgrades and enhancements.
- Developed program optimizations including program organization, revenue stream, equipment and technologies, parking pricing and economic development goals, and overall operations.
- Provided recommendations for field enforcement practices and operating expenditures.

State of Florida
Department of State

I certify from the records of this office that SP PLUS CORPORATION is a Delaware corporation authorized to transact business in the State of Florida, qualified on February 8, 1982.

The document number of this corporation is 851793.

I further certify that said corporation has paid all fees due this office through December 31, 2023, that its most recent annual report/uniform business report was filed on March 8, 2023, and that its status is active.

I further certify that said corporation has not filed a Certificate of Withdrawal.

Given under my hand and the Great Seal of the State of Florida at Tallahassee, the Capital, this the Twentieth day of April, 2023

Secretary of State

Tracking Number: 3210210479CU

To authenticate this certificate,visit the following site,enter this number, and then follow the instructions displayed.

https://services.sunbiz.org/Filings/CertificateOfStatus/CertificateAuthentication

Certification Regarding Debarment, Suspension and Other Matters of Responsibility

CITY OF OPA-LOCKA

CERTIFICATION REGARDING DEBARMENT, SUSPENSION PROPOSED DEBARMENT AND OTHER MATTERS OF RESPONSIBILITY

1. The Proposer certifies, to the best of its knowledge and belief, that the Proposer and/or any of its Principals:

A. Are not presently debarred, suspended, proposed for debarment, or declared ineligible for the award of contracts by any Federal agency.

B. Have not, within a three-year period preceding this offer, been convicted of or had a civil judgment rendered against them for: commission of fraud or a criminal offense in connection with obtaining, attempting to obtain, or performing a public (Federal, state, or local) contract or subcontract; violation of Federal or state antitrust statutes relating to the submission of offers; or commission of embezzlement, theft, forgery, bribery, falsification or destruction of records, making false statements, tax evasion, or receiving stolen property; and

C. Are not presently indicted for, or otherwise criminally or civilly charged by a governmental entity with, commission of any of the offenses enumerated in paragraph 1-B of this provision.

2. The Proposer has not, within a three-year period preceding this offer, had one or more contracts terminated for default by any City, State or Federal agency.

A. "Principals," for the purposes of this certification, means officers; directors; owners; partners; and persons having primary management or supervisory responsibilities within a business entity (e.g., general manager; plant manager; head of a subsidiary, division, or business segment, and similar positions). This Certification Concerns a Matter Within the Jurisdiction of an Agency of the United States and the Making of a False, Fictitious, or Fraudulent Certification May Render the Maker Subject to Prosecution Under Section 1001, Title 18, United States Code.

B. The Proposer shall provide immediate written notice to the Contracting Officer if, at any time prior to contract award, the Proposer learns that its certification was erroneous when submitted or has become erroneous by reason of changed circumstances.

C. A certification that any of the items in paragraph (a) of this provision exists will not necessarily result in withholding of an award under this solicitation. However, the certification will be considered in connection with a determination of the Proposer's responsibility. Failure of the Proposer to furnish a certification or provide such additional information as requested by the Contracting Officer may render the Proposer non-responsive.

D. Nothing contained in the foregoing shall be construed to require establishment of a system of records in order to render, in good faith, the certification required by paragraph (a) of this provision. The knowledge and information of a Proposer is not required to exceed

that which is normally possessed by a prudent person in the ordinary course of business dealings.

E. The certification in paragraph (a) of this provision is a material representation of fact upon which reliance was placed when making award. If it is later determined that the Proposer knowingly rendered an erroneous certification, in addition to other remedies available to the Government, the Contracting Officer may terminate the contract resulting from this solicitation for default.

AS THE PERSON AUTHORIZED TO SIGN THE STATEMENT, I CERTIFY THAT THIS FIRM COMPLIES FULLY WITH THE ABOVE REQUIREMENTS.

Signature_____

Printed Name Don Jones, Vice President

Drug-Free Workplace Certification

CITY OF OPA-LOCKA
RFP NO. 23-0706200

DRUG-FREE WORKPLACE CERTIFICATION FORM

Whenever two (2) or more bids/proposals, which are equal with respect to price, quality, and service, are received by the CITY OF OPA-LOCKA for the procurement of commodities or contractual services, a bid/proposal received from a business that certifies that it has implemented a drug-free workplace program shall be given preference in the award process. In order to have a drug-free workplace program, a business shall:

1. Publish a statement notifying employees that the unlawful manufacture, distribution, dispensing, possession or use of controlled substances is prohibited in the workplace and specifying the actions that will be taken against employees for violations of such prohibition.

2. Inform employees about the dangers of drug abuse in the workplace, the business's policy of maintaining a drug-free workplace, any available drug counseling, rehabilitation, and employee assistance programs, and the penalties that may be imposed upon employees for drug abuse violations.

3. Give each employee engaged in providing the commodities or contractual services that are under bid a copy of the statement specified in number (1).

4. In the statement specified in number (1), notify the employees that as a condition for working on the commodities or contractual services that are under bid, the employee will abide by the terms of the statement and will notify the employer of any conviction on or plea of guilty or no contest to any violation of Chapter 893, Florida Statutes or of any controlled substance law of the United States or any singular state, for a violation occurring in the workplace no later than five (5) days after such conviction.

5. Impose a sanction on, or require the satisfactory participation in a drug abuse assistance or rehabilitation program if such is available in the employee's community by any employee who is so convicted.

6. Make a good faith effort to continue to maintain a drug-free workplace through implementation of Section 287.087, Florida Statutes.

This Certification is submitted by Don Jones the
(Name)

Vice President of SP Plus Coroporation
(Title/Position) (Company)

who does hereby certify that said Company has implemented a drug-free workplace program, which meets the requirements of Section 287.087, Florida Statutes, which are identified in numbers (1) through (6) above.

July 5, 2023
Date

Signature

Non-Collusion Affidavit

CITY OF OPA-LOCKA NON-COLLUSION AFFIDAVIT

STATE OF FLORIDA - COUNTY OF MIAMI DADE

Don Jones **being first duly sworn, deposes and says that:**

(1) He/She/They is/are the Vice President (Owner, Partner, Officer, Representative or Agent) of SP Plus Corporation the PROPOSER that has submitted the attached proposal;

(2) He/She/They is/are fully informed respecting the preparation and contents of the attached Proposal and of all pertinent circumstances respecting such Proposal;

(3) Such Proposal is genuine and is not a collusive or sham Proposal;

(4) Neither the said PROPOSER nor any of its officers, partners, owners, agents, representatives, employees or parties in interest, including this affiant, have in any way colluded, conspired, connived or agreed, directly or indirectly, with any other PROPOSER, firm, or person to submit a collusive or sham Proposal in connection with the Work for which the attached Proposal has been submitted; or to refrain from Proposing in connection with such Work; or have in any manner, directly or indirectly, sought by agreement or collusion, or communication, or conference with any PROPOSER, firm, or person to fix any overhead, profit, or cost elements of the Proposal or of any other PROPOSER, or to fix any overhead, profit, or cost elements of the Proposed Price or the Proposed Price of any other PROPOSER, or to secure through any collusion, conspiracy, connivance, or unlawful agreement any advantage against (Recipient), or any person interested in the proposed Work;

(5) The price or prices quoted in the attached Proposal are fair and proper and are not tainted by any collusion, conspiracy, connivance, or unlawful agreement on the part of the PROPOSER or any other of its agents, representatives, owners, employees or parties of interest, including this affiant.

Signed, sealed and delivered in the presence of:

Sonny Delgado
Witness

Adriane Escobar.
Witness

By: _____
Signature

Don Jones, Vice President
Print Name and Title

Non-Discrimination Affidavit

NON-DISCRIMINATION AFFIDAVIT

I, the undersigned, hereby duly sworn, depose and say that the organization, business or entity represented herein shall not discriminate against any person in its operations, activities or delivery of services under any agreement it enters into with the City of Opa-locka. The same shall affirmatively comply with all applicable provisions of federal, state and local equal employment laws and shall not engage in or commit any discriminatory practice against any person based on race, age, religion, color, gender, sexual orientation, national origin, marital status, physical or mental disability, political affiliation or any other factor which cannot be lawfully used as a basis for service delivery.

By: _____
Don Jones

Title: Vice President

Sworn and subscribed before this

6 day of July, 20___

_____
Notary Public, State of Florida

Suray Delgado
(Printed Name)

My commission expires: 03/22/2024

Notary Public State of Florida
Suray Delgado Jimenez
My Commission GG 972011
Expires 03/22/2024

E-Verify

E-VERIFY

Effective January 1, 2021, public and private employers, contractors and subcontractors will be required to register with, and use of the E-Verify system in order to verify the work authorization status of all newly hired employees. Vendor/Consultant/Contractor acknowledges and agrees to utilize the U.S. Department of Homeland Security's E-Verify System to verify the employment eligibility of:

a) All persons employed by Vendor/Consultant/Contractor to perform employment duties within Florida during the term of the contract; and

b) All persons (including sub-vendors/sub-consultants/sub-contractors) assigned by Vendor /Consultant/ Contractor to perform work pursuant to the contract with the Department. The Vendor /Consultant/ Contractor acknowledges and agrees that use of the U.S. Department of Homeland Security's E-Verify System during the term of the contract is a condition of the contract with the City; and

By entering into a Contract, the Contractor becomes obligated to comply with the provisions of Section 448.095, Fla. Stat., "Employment Eligibility," as amended from time to time. This includes but is not limited to utilization of the E-Verify System to verify the work authorization status of all newly hired employees, and requiring all subcontractors to provide an affidavit attesting that the subcontractor does not employ, contract with, or subcontract with, an unauthorized alien. The contractor shall maintain a copy of such affidavit for the duration of the contract. Failure to comply will lead to termination of this Contract, or if a subcontractor knowingly violates the statute, the subcontract must be terminated immediately. If t contract is terminated for a violation of the statute by the Contractor, the Contractor may not be awarded a public contract for a period of 1 year after the date of termination. The Contractor acknowledges it is liable to the City for any additional costs as a result of termination of the contract due to Contractor's failure to comply with the provisions herein.

SP+'s E-Verify form is included on the following pages.

Company ID Number: 1231637

Approved by:

Employer SP Plus	
Name (Please Type or Print) Colleen kozak	Title
Signature Electronically Signed	Date 09/20/2017
Department of Homeland Security – Verification Division	
Name (Please Type or Print) USCIS Verification Division	Title
Signature Electronically Signed	Date 09/20/2017

Company ID Number: 1231637

Information Required for the E-Verify Program	
Information relating to your Company:	
Company Name	SP Plus
Company Facility Address	200 E Randolph Suite 7700 Chicago, IL 60601
Company Alternate Address	
County or Parish	COOK
Employer Identification Number	161171179
North American Industry Classification Systems Code	812
Parent Company	
Number of Employees	1,000 to 2,499
Number of Sites Verified for	20

Company ID Number: 1231637

Are you verifying for more than 1 site? If yes, please provide the number of sites verified for in each State:

ALABAMA	1 site(s)
ARIZONA	1 site(s)
CALIFORNIA	1 site(s)
COLORADO	1 site(s)
DIST OF COL	1 site(s)
FLORIDA	1 site(s)
GEORGIA	1 site(s)
ILLINOIS	1 site(s)
LOUISIANA	1 site(s)
MISSISSIPPI	1 site(s)
NORTH CAROLINA	1 site(s)
NEBRASKA	1 site(s)
PENNSYLVANIA	1 site(s)
PUERTO RICO	1 site(s)
SOUTH CAROLINA	1 site(s)
TENNESSEE	1 site(s)
TEXAS	1 site(s)
UTAH	1 site(s)
VIRGINIA	1 site(s)
WASHINGTON	1 site(s)

Company ID Number: 1231637

Information relating to the Program Administrator(s) for your Company on policy questions or operational problems:

Name	Suzanne Griffith
Phone Number	(615) 850 - 6338
Fax Number	
Email Address	sgriffith@spplus.com

Name	Tarah Kennedy
Phone Number	(312) 274 - 2164
Fax Number	
Email Address	tkennedy@spplus.com

Name	Nora OMalley
Phone Number	(312) 274 - 2000
Fax Number	
Email Address	nomalley@spplus.com

Name	Coleman Erica
Phone Number	(954) 524 - 6500 ext. 813
Fax Number	
Email Address	ecoleman@usaparkingsystem.com

Name	Holly Sterling
Phone Number	(954) 524 - 6500 ext. 751
Fax Number	
Email Address	hsterling@usaparkingsystem.com

Name	Gabriela Delgado
Phone Number	(312) 274 - 2051
Fax Number	
Email Address	gdelgado@spplus.com

Name	Susan Dilillo
Phone Number	(312) 274 - 2113
Fax Number	
Email Address	sdilillo@spplus.com

Name	Colleen kozak
Phone Number	(312) 274 - 2096
Fax Number	
Email Address	ckozak@spplus.com

Page intentionally left blank

9 Additional Information

9. Additional Information

Legal Comments

1. Termination Rights

- **SP+** will need the right to terminate the contract for the client's breach and failure to cure within 10 days for a monetary breach or within 30 days for a non-monetary breach.

- **SP+** will need the right to cure an alleged breach **--** 10 days for a monetary breach and 30 days for a non-monetary.

2. Clarification

The RFP does not address whether the consultant will be able to bid on a meter service should the City decide to move forward. In addition to providing Consulting Services, **SP+** is also a parking operator and would like to retain it rights to bid on any parking meter or enforcement program should the City decide to move forward with such.

3. Sample Contract

No sample contract is included in the RFP. **SP+** would like the right to negotiate terms if chosen as the successful respondent.

Disclaimer: It is expressly acknowledged that Consultant's services are provided solely from Consultant's perspective as an operator of automobile parking facilities, and that Consultant's services are not to be used or relied upon by Client in lieu of those rendered by professional architects or engineers.

CONSULTING SERVICES

Alexis Grainger, PE
Director, Consulting Services
250 W. 39th Street, Suite 1500
New York, NY 10018
Phone: (480) 200-2458
Email: agrainger@spplus.com

spplus.com | parking.com | bagsinc.com

CERTIFICATE OF LIABILITY INSURANCE

DATE(MM/DD/YYYY) 12/06/2022

THIS CERTIFICATE IS ISSUED AS A MATTER OF INFORMATION ONLY AND CONFERS NO RIGHTS UPON THE CERTIFICATE HOLDER. THIS CERTIFICATE DOES NOT AFFIRMATIVELY OR NEGATIVELY AMEND, EXTEND OR ALTER THE COVERAGE AFFORDED BY THE POLICIES BELOW. THIS CERTIFICATE OF INSURANCE DOES NOT CONSTITUTE A CONTRACT BETWEEN THE ISSUING INSURER(S), AUTHORIZED REPRESENTATIVE OR PRODUCER, AND THE CERTIFICATE HOLDER.

IMPORTANT: If the certificate holder is an ADDITIONAL INSURED, the policy(ies) must have ADDITIONAL INSURED provisions or be endorsed. If SUBROGATION IS WAIVED, subject to the terms and conditions of the policy, certain policies may require an endorsement. A statement on this certificate does not confer rights to the certificate holder in lieu of such endorsement(s).

PRODUCER
Aon Risk Services Central, Inc.
Chicago IL Office
200 East Randolph
Chicago IL 60601 USA

CONTACT NAME:
PHONE (A/C. No. Ext): (866) 283-7122 **FAX (A/C. No.):** 800-363-0105
E-MAIL ADDRESS:

INSURED
SP Plus Corporation
200 E Randolph Street, Suite 7700
Chicago IL 60601 USA

INSURER(S) AFFORDING COVERAGE		NAIC #
INSURER A:	Greenwich Insurance Company	22322
INSURER B:	AIG Specialty Insurance Company	26883
INSURER C:	Navigators Specialty Insurance Company	36056
INSURER D:	Illinois Union Insurance Company	27960
INSURER E:	Endurance American Specialty Ins Co.	41718
INSURER F:	Allied World Assurance Company (US) Inc	19489

COVERAGES **CERTIFICATE NUMBER:** 570096703875 **REVISION NUMBER:**

THIS IS TO CERTIFY THAT THE POLICIES OF INSURANCE LISTED BELOW HAVE BEEN ISSUED TO THE INSURED NAMED ABOVE FOR THE POLICY PERIOD INDICATED. NOTWITHSTANDING ANY REQUIREMENT, TERM OR CONDITION OF ANY CONTRACT OR OTHER DOCUMENT WITH RESPECT TO WHICH THIS CERTIFICATE MAY BE ISSUED OR MAY PERTAIN, THE INSURANCE AFFORDED BY THE POLICIES DESCRIBED HEREIN IS SUBJECT TO ALL THE TERMS, EXCLUSIONS AND CONDITIONS OF SUCH POLICIES. LIMITS SHOWN MAY HAVE BEEN REDUCED BY PAID CLAIMS.

Limits shown are as requested

INSR LTR	TYPE OF INSURANCE	ADDL INSD	SUBR WVD	POLICY NUMBER	POLICY EFF (MM/DD/YYYY)	POLICY EXP (MM/DD/YYYY)	LIMITS	
A	X COMMERCIAL GENERAL LIABILITY CLAIMS-MADE X OCCUR X Contractual Liability Included GEN'L AGGREGATE LIMIT APPLIES PER: POLICY PRO-JECT X LOC OTHER:			RGE300120906 SIR applies per policy terms & conditions	01/01/2023	01/01/2024	EACH OCCURRENCE	$9,000,000
							DAMAGE TO RENTED PREMISES (Ea occurrence)	$2,000,000
							MED EXP (Any one person)	$10,000
							PERSONAL & ADV INJURY	$9,000,000
							GENERAL AGGREGATE	$15,000,000
							PRODUCTS - COMP/OP AGG	$9,000,000
A	AUTOMOBILE LIABILITY X ANY AUTO OWNED AUTOS ONLY SCHEDULED AUTOS HIRED AUTOS ONLY NON-OWNED AUTOS ONLY X GKLL $5,000 SIR			RAD943782006 AOS	01/01/2023	01/01/2024	COMBINED SINGLE LIMIT (Ea accident)	$10,000,000
							BODILY INJURY (Per person)	
							BODILY INJURY (Per accident)	
							PROPERTY DAMAGE (Per accident)	
							Garagekeepers Limit	$3,000,000
B	X UMBRELLA LIAB X OCCUR EXCESS LIAB CLAIMS-MADE DED X RETENTION			34543486 SIR applies per policy terms & conditions	01/01/2023	01/01/2024	EACH OCCURRENCE	$10,000,000
							AGGREGATE	$10,000,000
J	WORKERS COMPENSATION AND EMPLOYERS' LIABILITY ANY PROPRIETOR / PARTNER / EXECUTIVE OFFICER/MEMBER EXCLUDED? Y / N: N (Mandatory in NH) If yes, describe under DESCRIPTION OF OPERATIONS below	N / A		RWD300121006 AOS	01/01/2023	01/01/2024	X PER STATUTE OTH-ER	
J				RWR300121106 RETRO	01/01/2023	01/01/2024	E.L. EACH ACCIDENT	$1,000,000
							E.L. DISEASE-EA EMPLOYEE	$1,000,000
							E.L. DISEASE-POLICY LIMIT	$1,000,000

DESCRIPTION OF OPERATIONS / LOCATIONS / VEHICLES (ACORD 101, Additional Remarks Schedule, may be attached if more space is required)

Re: For RFP Purposes Only.
Insurance charges will include all applicable premiums and costs, as well as retained exposure charges established by the Named Insured. 1/1/2023 - 1/1/2024 Crime & Excess Crime Pol #'s SAA50414480700 & XSC50414490700; $5,000,000 OCCURRENCE. Crime coverage provides first party coverage against business related crime such as robbery & burglary, employee dishonesty, forgery or alteration, computer fraud, guest property, money orders, and counterfeit currency.

CERTIFICATE HOLDER

SP Plus Corporation
200 E Randolph Street,
Suite 7700
Chicago IL 60601 USA

CANCELLATION

SHOULD ANY OF THE ABOVE DESCRIBED POLICIES BE CANCELLED BEFORE THE EXPIRATION DATE THEREOF, NOTICE WILL BE DELIVERED IN ACCORDANCE WITH THE POLICY PROVISIONS.

AUTHORIZED REPRESENTATIVE

Aon Risk Services Central, Inc.

Holder Identifier : RFP-SP Plus

Certificate No : 570096703875

©1988-2015 ACORD CORPORATION. All rights reserved.

AGENCY CUSTOMER ID: 570000025472
LOC #:

ADDITIONAL REMARKS SCHEDULE

AGENCY	NAMED INSURED
Aon Risk Services Central, Inc.	SP Plus Corporation
POLICY NUMBER: See Certificate Number: 570096703875	
CARRIER: See Certificate Number: 570096703875 — NAIC CODE:	EFFECTIVE DATE:

ADDITIONAL REMARKS

THIS ADDITIONAL REMARKS FORM IS A SCHEDULE TO ACORD FORM,
FORM NUMBER: ACORD 25 **FORM TITLE:** Certificate of Liability Insurance

INSURER(S) AFFORDING COVERAGE	NAIC #
INSURER G : Everest Indemnity Insurance Company	10851
INSURER H : Great American Spirit Ins Co	33723
INSURER I : American Guarantee & Liability Ins Co	26247
INSURER J : XL Insurance America Inc	24554

ADDITIONAL POLICIES If a policy below does not include limit information, refer to the corresponding policy on the ACORD certificate form for policy limits.

INSR LTR	TYPE OF INSURANCE	ADDL INSD	SUBR WVD	POLICY NUMBER	POLICY EFFECTIVE DATE (MM/DD/YYYY)	POLICY EXPIRATION DATE (MM/DD/YYYY)	LIMITS	
	EXCESS LIABILITY							
C				CH23RXSZ03X3YIC $10M xs $10M	01/01/2023	01/01/2024	Aggregate	$10,000,000
D				XANG27921103008 $15M x $20M	01/01/2023	01/01/2024	Aggregate	$15,000,000
E				XSC30000541305 $15M x $35M	01/01/2023	01/01/2024	Aggregate	$15,000,000
F				03126674 $10M xs $50M	01/01/2023	01/01/2024	Aggregate	$10,000,000
G				XC8EX00125231 $15M xs $60M	01/01/2023	01/01/2024	Aggregate	$15,000,000
I				AXF565834103 $12.5M po $25M xs $75M	01/01/2023	01/01/2024	Aggregate	$12,500,000
H				EXC4691158 $12.5M po $25M xs $75M	01/01/2023	01/01/2024	Aggregate	$12,500,000
							Each Occurrence	$12,500,000

© 2008 ACORD CORPORATION. All rights reserved.
The ACORD name and logo are registered marks of ACORD

CITY OF OPA-LOCKA
RFP NO. 23-0706200

DRUG-FREE WORKPLACE CERTIFICATION FORM

Whenever two (2) or more bids/proposals, which are equal with respect to price, quality, and service, are received by the CITY OF OPA-LOCKA for the procurement of commodities or contractual services, a bid/proposal received from a business that certifies that it has implemented a drug-free workplace program shall be given preference in the award process. In order to have a drug-free workplace program, a business shall:

1. Publish a statement notifying employees that the unlawful manufacture, distribution, dispensing, possession or use of controlled substances is prohibited in the workplace and specifying the actions that will be taken against employees for violations of such prohibition.

2. Inform employees about the dangers of drug abuse in the workplace, the business's policy of maintaining a drug-free workplace, any available drug counseling, rehabilitation, and employee assistance programs, and the penalties that may be imposed upon employees for drug abuse violations.

3. Give each employee engaged in providing the commodities or contractual services that are under bid a copy of the statement specified in number (1).

4. In the statement specified in number (1), notify the employees that as a condition for working on the commodities or contractual services that are under bid, the employee will abide by the terms of the statement and will notify the employer of any conviction on or plea of guilty or no contest to any violation of Chapter 893, Florida Statutes or of any controlled substance law of the United States or any singular state, for a violation occurring in the workplace no later than five (5) days after such conviction.

5. Impose a sanction on, or require the satisfactory participation in a drug abuse assistance or rehabilitation program if such is available in the employee's community by any employee who is so convicted.

6. Make a good faith effort to continue to maintain a drug-free workplace through implementation of Section 287.087, Florida Statutes.

This Certification is submitted by Don Jones the
(Name)

Vice President of SP Plus Coroporation
(Title/Position) (Company)

who does hereby certify that said Company has implemented a drug-free workplace program, which meets the requirements of Section 287.087, Florida Statutes, which are identified in numbers (1) through (6) above.

July 5, 2023
Date

Signature

CITY OF OPA-LOCKA NON-COLLUSION AFFIDAVIT

STATE OF FLORIDA - COUNTY OF MIAMI DADE

Don Jones **being first duly sworn, deposes and says that:**

(1) He/She/They is/are the Vice President (Owner, Partner, Officer, Representative or Agent) of SP Plus Corporation the PROPOSER that has submitted the attached proposal;

(2) He/She/They is/are fully informed respecting the preparation and contents of the attached Proposal and of all pertinent circumstances respecting such Proposal;

(3) Such Proposal is genuine and is not a collusive or sham Proposal;

(4) Neither the said PROPOSER nor any of its officers, partners, owners, agents, representatives, employees or parties in interest, including this affiant, have in any way colluded, conspired, connived or agreed, directly or indirectly, with any other PROPOSER, firm, or person to submit a collusive or sham Proposal in connection with the Work for which the attached Proposal has been submitted; or to refrain from Proposing in connection with such Work; or have in any manner, directly or indirectly, sought by agreement or collusion, or communication, or conference with any PROPOSER, firm, or person to fix any overhead, profit, or cost elements of the Proposal or of any other PROPOSER, or to fix any overhead, profit, or cost elements of the Proposed Price or the Proposed Price of any other PROPOSER, or to secure through any collusion, conspiracy, connivance, or unlawful agreement any advantage against (Recipient), or any person interested in the proposed Work;

(5) The price or prices quoted in the attached Proposal are fair and proper and are not tainted by any collusion, conspiracy, connivance, or unlawful agreement on the part of the PROPOSER or any other of its agents, representatives, owners, employees or parties of interest, including this affiant.

Signed, sealed and delivered in the presence of:

Sonny Delgado
Witness

Adriana Escobar.
Witness

By: _____
Signature

Don Jones, Vice President
Print Name and Title

State of Florida
Department of State

I certify from the records of this office that SP PLUS CORPORATION is a Delaware corporation authorized to transact business in the State of Florida, qualified on February 8, 1982.

The document number of this corporation is 851793.

I further certify that said corporation has paid all fees due this office through December 31, 2023, that its most recent annual report/uniform business report was filed on March 8, 2023, and that its status is active.

I further certify that said corporation has not filed a Certificate of Withdrawal.

Given under my hand and the Great Seal of the State of Florida at Tallahassee, the Capital, this the Twentieth day of April, 2023

Secretary of State

Tracking Number: 3210210479CU

To authenticate this certificate,visit the following site,enter this number, and then follow the instructions displayed.

https://services.sunbiz.org/Filings/CertificateOfStatus/CertificateAuthentication

Proposer Qualifications

RFP NO. 23-0706200
PROPOSER QUALIFICATIONS

FEASIBILITY STUDY TO INSTALL PARKING METERS

The Proposer, as a result of this proposal, MUST hold a County and/or Municipal Contractor's Occupational License in the area of their fixed business location. The following information MUST be completed and submitted with the proposal to be considered:

1. Legal Name and Address:

   Name: SP Plus Corporation

   Address: 444 Brickell, Suite 200

   City, State, Zip: Miami, FL 33131 Phone/Fax: (305) 874-0245

2. Check One: Corporation (✓) Partnership ( ) Individual ( )

3. If Corporation, indicate:
   Date of Incorporation: 9/24/1981 State in which Incorporated: Delaware

4. If an out-of-state Corporation, currently authorized to do business in Florida, give date of such authorization: 2/8/1982

5. **Name and Title of Principal Officers** **Date Elected:**

Marc Baumann	President and CEO
Christopher Sherman	President, Commercial Division
James F. Buczek	Chief Operations Officer
Kris Roy	Chief Financial Officer

6. The length of time in business: 94 years

7. The length of time (continuous) in business as a service organization in Florida:
   41 years

8. Provide a list of at least three commercial or government references that the bidder has supplied service/commodities meeting the requirements of the City of Opa-locka RFP during the last twenty-four months.

9. A copy of County and/or Municipal Occupational License(s)

Note: *Information requested herein and submitted by the Proposers will be analyzed by the City of Opa-locka and will be a factor considered in awarding any resulting contract. The purpose is to insure that the Contractors, in the sole opinion of the City of Opa-locka, can sufficiently and efficiently perform all the required services in a timely and satisfactory manner as will be required by the subject contract. If there are any terms and/or conditions that are in conflict, the most stringent requirement shall apply.*

Certification Regarding Debarment, Suspension and Other Matters of Responsibility

CITY OF OPA-LOCKA

CERTIFICATION REGARDING DEBARMENT, SUSPENSION PROPOSED DEBARMENT AND OTHER MATTERS OF RESPONSIBILITY

1. The Proposer certifies, to the best of its knowledge and belief, that the Proposer and/or any of its Principals:

A. Are not presently debarred, suspended, proposed for debarment, or declared ineligible for the award of contracts by any Federal agency.

B. Have not, within a three-year period preceding this offer, been convicted of or had a civil judgment rendered against them for: commission of fraud or a criminal offense in connection with obtaining, attempting to obtain, or performing a public (Federal, state, or local) contract or subcontract; violation of Federal or state antitrust statutes relating to the submission of offers; or commission of embezzlement, theft, forgery, bribery, falsification or destruction of records, making false statements, tax evasion, or receiving stolen property; and

C. Are not presently indicted for, or otherwise criminally or civilly charged by a governmental entity with, commission of any of the offenses enumerated in paragraph 1-B of this provision.

2. The Proposer has not, within a three-year period preceding this offer, had one or more contracts terminated for default by any City, State or Federal agency.

A. "Principals," for the purposes of this certification, means officers; directors; owners; partners; and persons having primary management or supervisory responsibilities within a business entity (e.g., general manager; plant manager; head of a subsidiary, division, or business segment, and similar positions). This Certification Concerns a Matter Within the Jurisdiction of an Agency of the United States and the Making of a False, Fictitious, or Fraudulent Certification May Render the Maker Subject to Prosecution Under Section 1001, Title 18, United States Code.

B. The Proposer shall provide immediate written notice to the Contracting Officer if, at any time prior to contract award, the Proposer learns that its certification was erroneous when submitted or has become erroneous by reason of changed circumstances.

C. A certification that any of the items in paragraph (a) of this provision exists will not necessarily result in withholding of an award under this solicitation. However, the certification will be considered in connection with a determination of the Proposer's responsibility. Failure of the Proposer to furnish a certification or provide such additional information as requested by the Contracting Officer may render the Proposer non-responsive.

D. Nothing contained in the foregoing shall be construed to require establishment of a system of records in order to render, in good faith, the certification required by paragraph (a) of this provision. The knowledge and information of a Proposer is not required to exceed

that which is normally possessed by a prudent person in the ordinary course of business dealings.

E. The certification in paragraph (a) of this provision is a material representation of fact upon which reliance was placed when making award. If it is later determined that the Proposer knowingly rendered an erroneous certification, in addition to other remedies available to the Government, the Contracting Officer may terminate the contract resulting from this solicitation for default.

AS THE PERSON AUTHORIZED TO SIGN THE STATEMENT, I CERTIFY THAT THIS FIRM COMPLIES FULLY WITH THE ABOVE REQUIREMENTS.

Signature_____

Printed Name Don Jones, Vice President

Non-Discrimination Affidavit

NON-DISCRIMINATION AFFIDAVIT

I, the undersigned, hereby duly sworn, depose and say that the organization, business or entity represented herein shall not discriminate against any person in its operations, activities or delivery of services under any agreement it enters into with the City of Opa-locka. The same shall affirmatively comply with all applicable provisions of federal, state and local equal employment laws and shall not engage in or commit any discriminatory practice against any person based on race, age, religion, color, gender, sexual orientation, national origin, marital status, physical or mental disability, political affiliation or any other factor which cannot be lawfully used as a basis for service delivery.

By: _____
Don Jones

Title: Vice President

Sworn and subscribed before this

6 day of July, 20___

_____
Notary Public, State of Florida

Suray Delgado
(Printed Name)

My commission expires: 03/22/2024

Notary Public State of Florida
Suray Delgado Jimenez
My Commission GG 972011
Expires 03/22/2024

E-Verify

E-VERIFY

Effective January 1, 2021, public and private employers, contractors and subcontractors will be required to register with, and use of the E-Verify system in order to verify the work authorization status of all newly hired employees. Vendor/Consultant/Contractor acknowledges and agrees to utilize the U.S. Department of Homeland Security's E-Verify System to verify the employment eligibility of:

a) All persons employed by Vendor/Consultant/Contractor to perform employment duties within Florida during the term of the contract; and

b) All persons (including sub-vendors/sub-consultants/sub-contractors) assigned by Vendor /Consultant/ Contractor to perform work pursuant to the contract with the Department. The Vendor /Consultant/ Contractor acknowledges and agrees that use of the U.S. Department of Homeland Security's E-Verify System during the term of the contract is a condition of the contract with the City; and

By entering into a Contract, the Contractor becomes obligated to comply with the provisions of Section 448.095, Fla. Stat., "Employment Eligibility," as amended from time to time. This includes but is not limited to utilization of the E-Verify System to verify the work authorization status of all newly hired employees, and requiring all subcontractors to provide an affidavit attesting that the subcontractor does not employ, contract with, or subcontract with, an unauthorized alien. The contractor shall maintain a copy of such affidavit for the duration of the contract. Failure to comply will lead to termination of this Contract, or if a subcontractor knowingly violates the statute, the subcontract must be terminated immediately. If t contract is terminated for a violation of the statute by the Contractor, the Contractor may not be awarded a public contract for a period of 1 year after the date of termination. The Contractor acknowledges it is liable to the City for any additional costs as a result of termination of the contract due to Contractor's failure to comply with the provisions herein.

SP+'s E-Verify form is included on the following pages.

Company ID Number: 1231637

Approved by:

Employer SP Plus	
Name (Please Type or Print) Colleen kozak	Title
Signature Electronically Signed	Date 09/20/2017
Department of Homeland Security – Verification Division	
Name (Please Type or Print) USCIS Verification Division	Title
Signature Electronically Signed	Date 09/20/2017

Company ID Number: 1231637

Information Required for the E-Verify Program	
Information relating to your Company:	
Company Name	SP Plus
Company Facility Address	200 E Randolph Suite 7700 Chicago, IL 60601
Company Alternate Address	
County or Parish	COOK
Employer Identification Number	161171179
North American Industry Classification Systems Code	812
Parent Company	
Number of Employees	1,000 to 2,499
Number of Sites Verified for	20

Company ID Number: 1231637

Are you verifying for more than 1 site? If yes, please provide the number of sites verified for in each State:

ALABAMA	1 site(s)
ARIZONA	1 site(s)
CALIFORNIA	1 site(s)
COLORADO	1 site(s)
DIST OF COL	1 site(s)
FLORIDA	1 site(s)
GEORGIA	1 site(s)
ILLINOIS	1 site(s)
LOUISIANA	1 site(s)
MISSISSIPPI	1 site(s)
NORTH CAROLINA	1 site(s)
NEBRASKA	1 site(s)
PENNSYLVANIA	1 site(s)
PUERTO RICO	1 site(s)
SOUTH CAROLINA	1 site(s)
TENNESSEE	1 site(s)
TEXAS	1 site(s)
UTAH	1 site(s)
VIRGINIA	1 site(s)
WASHINGTON	1 site(s)

Company ID Number: 1231637

Information relating to the Program Administrator(s) for your Company on policy questions or operational problems:

Name	Suzanne Griffith
Phone Number	(615) 850 - 6338
Fax Number	
Email Address	sgriffith@spplus.com

Name	Tarah Kennedy
Phone Number	(312) 274 - 2164
Fax Number	
Email Address	tkennedy@spplus.com

Name	Nora OMalley
Phone Number	(312) 274 - 2000
Fax Number	
Email Address	nomalley@spplus.com

Name	Coleman Erica
Phone Number	(954) 524 - 6500 ext. 813
Fax Number	
Email Address	ecoleman@usaparkingsystem.com

Name	Holly Sterling
Phone Number	(954) 524 - 6500 ext. 751
Fax Number	
Email Address	hsterling@usaparkingsystem.com

Name	Gabriela Delgado
Phone Number	(312) 274 - 2051
Fax Number	
Email Address	gdelgado@spplus.com

Name	Susan Dilillo
Phone Number	(312) 274 - 2113
Fax Number	
Email Address	sdilillo@spplus.com

Name	Colleen kozak
Phone Number	(312) 274 - 2096
Fax Number	
Email Address	ckozak@spplus.com

Page intentionally left blank

RFP NO: 23-0706200

PRICE PROPOSAL FORM

FEASIBILITY STUDY TO INSTALL PARKING METERS ALONG ALI-BABA AVENUE BETWEEN 27TH AVENUE AND 22ND AVENUE (BOTH SIDES OF THE STREET)

If Proposer fees will be paid by City, Proposer understands and agrees that the Contract Price is the lump sum to furnish and install all of the Work complete in place. Vendor's price will not be adjusted unless the City changes the scope of the Project after the Contract Date.

As such, the Vendor shall furnish all labor, materials, equipment, tools, supervision and services necessary to provide a complete, in place Project for the Proposed Price of:

LUMP SUM PRICE: $ 9,309.38

SUBMITTED THIS 6th DAY OF July 2023.

BID SUBMITTED BY:

SP Plus Corporation
Company

(305) 874-0245
Telephone Number

Don Jones
Name of Person Authorized to Submit Bid

N/A.
Fax Number

Signature

DJones@spplus.com
Email Address

Vice President
Title

RFP NO: 23-0706200

PRICE PROPOSAL FORM

FEASIBILITY STUDY TO INSTALL PARKING METERS NW 22ND AVENUE FROM RUTLAND STREET TO BURLINGTON STREET (EAST AND WEST SIDE)

If Proposer fees will be paid by City, Proposer understands and agrees that the Contract Price is the lump sum to furnish and install all of the Work complete in place. Vendor's price will not be adjusted unless the City changes the scope of the Project after the Contract Date.

As such, the Vendor shall furnish all labor, materials, equipment, tools, supervision and services necessary to provide a complete, in place Project for the Proposed Price of:

LUMP SUM PRICE: $ 2,068.75

SUBMITTED THIS 6th DAY OF July 2023.

BID SUBMITTED BY:

SP Plus Corporation
Company

(305) 874-0245
Telephone Number

Don Jones
Name of Person Authorized to Submit Bid

N/A.
Fax Number

Signature

DJones@spplus.com
Email Address

Vice President
Title

RFP NO: 23-0706200

PRICE PROPOSAL FORM

FEASIBILITY STUDY TO INSTALL PARKING METERS ALONG PERVIZ AVENUE INTERSECTION OF SHARAZAD BOULEVARD TO ALI-BABA AVENUE

If Proposer fees will be paid by City, Proposer understands and agrees that the Contract Price is the lump sum to furnish and install all of the Work complete in place. Vendor's price will not be adjusted unless the City changes the scope of the Project after the Contract Date.

As such, the Vendor shall furnish all labor, materials, equipment, tools, supervision and services necessary to provide a complete, in place Project for the Proposed Price of:

LUMP SUM PRICE: $ 5,171.88

SUBMITTED THIS 6th DAY OF July 2023.

BID SUBMITTED BY:

SP Plus Corporation
Company

(305) 874-0245
Telephone Number

Don Jones
Name of Person Authorized to Submit Bid

N/A.
Fax Number

Signature

DJones@spplus.com
Email Address

Vice President
Title

RFP NO: 23-0706200

PRICE PROPOSAL FORM

FEASIBILITY STUDY TO INSTALL PARKING METERS ALONG ALADDIN STREET FROM ALI-BABA AVENUE TO SHARAZAD BOULEVARD

If Proposer fees will be paid by City, Proposer understands and agrees that the Contract Price is the lump sum to furnish and install all of the Work complete in place. Vendor's price will not be adjusted unless the City changes the scope of the Project after the Contract Date.

As such, the Vendor shall furnish all labor, materials, equipment, tools, supervision and services necessary to provide a complete, in place Project for the Proposed Price of:

LUMP SUM PRICE: $ 3,103.13

SUBMITTED THIS 6th DAY OF July 2023.

BID SUBMITTED BY:

SP Plus Corporation
Company

(305) 874-0245
Telephone Number

Don Jones
Name of Person Authorized to Submit Bid

N/A.
Fax Number

Signature

DJones@spplus.com
Email Address

Vice President
Title

RFP NO: 23-0706200

PRICE PROPOSAL FORM

FEASIBILITY STUDY TO INSTALL PARKING METERS ALONG SALIH STREET TO AHMAD STREET

If Proposer fees will be paid by City, Proposer understands and agrees that the Contract Price is the lump sum to furnish and install all of the Work complete in place. Vendor's price will not be adjusted unless the City changes the scope of the Project after the Contract Date.

As such, the Vendor shall furnish all labor, materials, equipment, tools, supervision and services necessary to provide a complete, in place Project for the Proposed Price of:

LUMP SUM PRICE: $ 6,206.25

SUBMITTED THIS 6th DAY OF July 2023.

BID SUBMITTED BY:

SP Plus Corporation
Company

(305) 874-0245
Telephone Number

Don Jones
Name of Person Authorized to Submit

N/A.
Fax Number

Signature

DJones@spplus.com
Email Address

Vice President
Title

RFP NO: 23-0706200

PRICE PROPOSAL FORM

FEASIBILITY STUDY TO INSTALL PARKING METERS ALONG ALI-BABA AVENUE FROM SHARAZAD BOULEVARD TO AHMAD STREET

If Proposer fees will be paid by City, Proposer understands and agrees that the Contract Price is the lump sum to furnish and install all of the Work complete in place. Vendor's price will not be adjusted unless the City changes the scope of the Project after the Contract Date.

As such, the Vendor shall furnish all labor, materials, equipment, tools, supervision and services necessary to provide a complete, in place Project for the Proposed Price of:

LUMP SUM PRICE: $ 10,343.75

SUBMITTED THIS 6th DAY OF July 2023.

BID SUBMITTED BY:

SP Plus Corporation
Company

(305) 874-0245
Telephone Number

Don Jones
Name of Person Authorized to Submit

N/A.
Fax Number

Signature

DJones@spplus.com
Email Address

Vice President
Title

RFP NO: 23-0706200

PRICE PROPOSAL FORM

FEASIBILITY STUDY TO INSTALL PARKING METERS ALONG CALIPH STREET

If Proposer fees will be paid by City, Proposer understands and agrees that the Contract Price is the lump sum to furnish and install all of the Work complete in place. Vendor's price will not be adjusted unless the City changes the scope of the Project after the Contract Date.

As such, the Vendor shall furnish all labor, materials, equipment, tools, supervision and services necessary to provide a complete, in place Project for the Proposed Price of:

LUMP SUM PRICE: $ 5,171.88

SUBMITTED THIS 6th DAY OF July 2023.

BID SUBMITTED BY:

SP Plus Corporation
Company

(305) 874-0245
Telephone Number

Don Jones
Name of Person Authorized to Submit

N/A.
Fax Number

Signature

DJones@spplus.com
Email Address

Vice President
Title

Form **W-9**
(Rev. October 2018)
Department of the Treasury
Internal Revenue Service

Request for Taxpayer Identification Number and Certification

▶ Go to *www.irs.gov/FormW9* for instructions and the latest information.

Give Form to the requester. Do not send to the IRS.

Print or type. See Specific Instructions on page 3.

1 Name (as shown on your income tax return). Name is required on this line; do not leave this line blank.
SP PLUS CORPORATION

2 Business name/disregarded entity name, if different from above

3 Check appropriate box for federal tax classification of the person whose name is entered on line 1. Check only **one** of the following seven boxes.

☐ Individual/sole proprietor or single-member LLC ☑ C Corporation ☐ S Corporation ☐ Partnership ☐ Trust/estate

☐ Limited liability company. Enter the tax classification (C=C corporation, S=S corporation, P=Partnership) ▶

Note: Check the appropriate box in the line above for the tax classification of the single-member owner. Do not check LLC if the LLC is classified as a single-member LLC that is disregarded from the owner unless the owner of the LLC is another LLC that is **not** disregarded from the owner for U.S. federal tax purposes. Otherwise, a single-member LLC that is disregarded from the owner should check the appropriate box for the tax classification of its owner.

☐ Other (see instructions) ▶

4 Exemptions (codes apply only to certain entities, not individuals; see instructions on page 3):

Exempt payee code (if any) 5

Exemption from FATCA reporting code (if any) D

(Applies to accounts maintained outside the U.S.)

5 Address (number, street, and apt. or suite no.) See instructions.
200 EAST RANDOLPH STREET, SUITE 7700

Requester's name and address (optional)

6 City, state, and ZIP code
CHICAGO, IL 60601

7 List account number(s) here (optional)

Part I Taxpayer Identification Number (TIN)

Enter your TIN in the appropriate box. The TIN provided must match the name given on line 1 to avoid backup withholding. For individuals, this is generally your social security number (SSN). However, for a resident alien, sole proprietor, or disregarded entity, see the instructions for Part I, later. For other entities, it is your employer identification number (EIN). If you do not have a number, see *How to get a TIN,* later.

Note: If the account is in more than one name, see the instructions for line 1. Also see *What Name and Number To Give the Requester* for guidelines on whose number to enter.

Social security number
☐☐☐ – ☐☐ – ☐☐☐☐

or

Employer identification number
1 6 – 1 1 7 1 1 7 9

Part II Certification

Under penalties of perjury, I certify that:

1. The number shown on this form is my correct taxpayer identification number (or I am waiting for a number to be issued to me); and
2. I am not subject to backup withholding because: (a) I am exempt from backup withholding, or (b) I have not been notified by the Internal Revenue Service (IRS) that I am subject to backup withholding as a result of a failure to report all interest or dividends, or (c) the IRS has notified me that I am no longer subject to backup withholding; and
3. I am a U.S. citizen or other U.S. person (defined below); and
4. The FATCA code(s) entered on this form (if any) indicating that I am exempt from FATCA reporting is correct.

Certification instructions. You must cross out item 2 above if you have been notified by the IRS that you are currently subject to backup withholding because you have failed to report all interest and dividends on your tax return. For real estate transactions, item 2 does not apply. For mortgage interest paid, acquisition or abandonment of secured property, cancellation of debt, contributions to an individual retirement arrangement (IRA), and generally, payments other than interest and dividends, you are not required to sign the certification, but you must provide your correct TIN. See the instructions for Part II, later.

Sign Here Signature of U.S. person ▶ Valerie L. Shoulders Date ▶ 1/16/2023

General Instructions

Section references are to the Internal Revenue Code unless otherwise noted.

Future developments. For the latest information about developments related to Form W-9 and its instructions, such as legislation enacted after they were published, go to *www.irs.gov/FormW9.*

Purpose of Form

An individual or entity (Form W-9 requester) who is required to file an information return with the IRS must obtain your correct taxpayer identification number (TIN) which may be your social security number (SSN), individual taxpayer identification number (ITIN), adoption taxpayer identification number (ATIN), or employer identification number (EIN), to report on an information return the amount paid to you, or other amount reportable on an information return. Examples of information returns include, but are not limited to, the following.

- Form 1099-INT (interest earned or paid)
- Form 1099-DIV (dividends, including those from stocks or mutual funds)
- Form 1099-MISC (various types of income, prizes, awards, or gross proceeds)
- Form 1099-B (stock or mutual fund sales and certain other transactions by brokers)
- Form 1099-S (proceeds from real estate transactions)
- Form 1099-K (merchant card and third party network transactions)
- Form 1098 (home mortgage interest), 1098-E (student loan interest), 1098-T (tuition)
- Form 1099-C (canceled debt)
- Form 1099-A (acquisition or abandonment of secured property)

Use Form W-9 only if you are a U.S. person (including a resident alien), to provide your correct TIN.

If you do not return Form W-9 to the requester with a TIN, you might be subject to backup withholding. See What is backup withholding, *later.*

By signing the filled-out form, you:

1. Certify that the TIN you are giving is correct (or you are waiting for a number to be issued),

2. Certify that you are not subject to backup withholding, or

3. Claim exemption from backup withholding if you are a U.S. exempt payee. If applicable, you are also certifying that as a U.S. person, your allocable share of any partnership income from a U.S. trade or business is not subject to the withholding tax on foreign partners' share of effectively connected income, and

4. Certify that FATCA code(s) entered on this form (if any) indicating that you are exempt from the FATCA reporting, is correct. See *What is FATCA reporting,* later, for further information.

Note: If you are a U.S. person and a requester gives you a form other than Form W-9 to request your TIN, you must use the requester's form if it is substantially similar to this Form W-9.

Definition of a U.S. person. For federal tax purposes, you are considered a U.S. person if you are:

- An individual who is a U.S. citizen or U.S. resident alien;
- A partnership, corporation, company, or association created or organized in the United States or under the laws of the United States;
- An estate (other than a foreign estate); or
- A domestic trust (as defined in Regulations section 301.7701-7).

Special rules for partnerships. Partnerships that conduct a trade or business in the United States are generally required to pay a withholding tax under section 1446 on any foreign partners' share of effectively connected taxable income from such business. Further, in certain cases where a Form W-9 has not been received, the rules under section 1446 require a partnership to presume that a partner is a foreign person, and pay the section 1446 withholding tax. Therefore, if you are a U.S. person that is a partner in a partnership conducting a trade or business in the United States, provide Form W-9 to the partnership to establish your U.S. status and avoid section 1446 withholding on your share of partnership income.

In the cases below, the following person must give Form W-9 to the partnership for purposes of establishing its U.S. status and avoiding withholding on its allocable share of net income from the partnership conducting a trade or business in the United States.

- In the case of a disregarded entity with a U.S. owner, the U.S. owner of the disregarded entity and not the entity;
- In the case of a grantor trust with a U.S. grantor or other U.S. owner, generally, the U.S. grantor or other U.S. owner of the grantor trust and not the trust; and
- In the case of a U.S. trust (other than a grantor trust), the U.S. trust (other than a grantor trust) and not the beneficiaries of the trust.

Foreign person. If you are a foreign person or the U.S. branch of a foreign bank that has elected to be treated as a U.S. person, do not use Form W-9. Instead, use the appropriate Form W-8 or Form 8233 (see Pub. 515, Withholding of Tax on Nonresident Aliens and Foreign Entities).

Nonresident alien who becomes a resident alien. Generally, only a nonresident alien individual may use the terms of a tax treaty to reduce or eliminate U.S. tax on certain types of income. However, most tax treaties contain a provision known as a "saving clause." Exceptions specified in the saving clause may permit an exemption from tax to continue for certain types of income even after the payee has otherwise become a U.S. resident alien for tax purposes.

If you are a U.S. resident alien who is relying on an exception contained in the saving clause of a tax treaty to claim an exemption from U.S. tax on certain types of income, you must attach a statement to Form W-9 that specifies the following five items.

1. The treaty country. Generally, this must be the same treaty under which you claimed exemption from tax as a nonresident alien.

2. The treaty article addressing the income.

3. The article number (or location) in the tax treaty that contains the saving clause and its exceptions.

4. The type and amount of income that qualifies for the exemption from tax.

5. Sufficient facts to justify the exemption from tax under the terms of the treaty article.

Example. Article 20 of the U.S.-China income tax treaty allows an exemption from tax for scholarship income received by a Chinese student temporarily present in the United States. Under U.S. law, this student will become a resident alien for tax purposes if his or her stay in the United States exceeds 5 calendar years. However, paragraph 2 of the first Protocol to the U.S.-China treaty (dated April 30, 1984) allows the provisions of Article 20 to continue to apply even after the Chinese student becomes a resident alien of the United States. A Chinese student who qualifies for this exception (under paragraph 2 of the first protocol) and is relying on this exception to claim an exemption from tax on his or her scholarship or fellowship income would attach to Form W-9 a statement that includes the information described above to support that exemption.

If you are a nonresident alien or a foreign entity, give the requester the appropriate completed Form W-8 or Form 8233.

Backup Withholding

What is backup withholding? Persons making certain payments to you must under certain conditions withhold and pay to the IRS 24% of such payments. This is called "backup withholding." Payments that may be subject to backup withholding include interest, tax-exempt interest, dividends, broker and barter exchange transactions, rents, royalties, nonemployee pay, payments made in settlement of payment card and third party network transactions, and certain payments from fishing boat operators. Real estate transactions are not subject to backup withholding.

You will not be subject to backup withholding on payments you receive if you give the requester your correct TIN, make the proper certifications, and report all your taxable interest and dividends on your tax return.

Payments you receive will be subject to backup withholding if:

1. You do not furnish your TIN to the requester,

2. You do not certify your TIN when required (see the instructions for Part II for details),

3. The IRS tells the requester that you furnished an incorrect TIN,

4. The IRS tells you that you are subject to backup withholding because you did not report all your interest and dividends on your tax return (for reportable interest and dividends only), or

5. You do not certify to the requester that you are not subject to backup withholding under 4 above (for reportable interest and dividend accounts opened after 1983 only).

Certain payees and payments are exempt from backup withholding. See *Exempt payee code,* later, and the separate Instructions for the Requester of Form W-9 for more information.

Also see *Special rules for partnerships,* earlier.

What is FATCA Reporting?

The Foreign Account Tax Compliance Act (FATCA) requires a participating foreign financial institution to report all United States account holders that are specified United States persons. Certain payees are exempt from FATCA reporting. See *Exemption from FATCA reporting code,* later, and the Instructions for the Requester of Form W-9 for more information.

Updating Your Information

You must provide updated information to any person to whom you claimed to be an exempt payee if you are no longer an exempt payee and anticipate receiving reportable payments in the future from this person. For example, you may need to provide updated information if you are a C corporation that elects to be an S corporation, or if you no longer are tax exempt. In addition, you must furnish a new Form W-9 if the name or TIN changes for the account; for example, if the grantor of a grantor trust dies.

Penalties

Failure to furnish TIN. If you fail to furnish your correct TIN to a requester, you are subject to a penalty of $50 for each such failure unless your failure is due to reasonable cause and not to willful neglect.

Civil penalty for false information with respect to withholding. If you make a false statement with no reasonable basis that results in no backup withholding, you are subject to a $500 penalty.

Criminal penalty for falsifying information. Willfully falsifying certifications or affirmations may subject you to criminal penalties including fines and/or imprisonment.

Misuse of TINs. If the requester discloses or uses TINs in violation of federal law, the requester may be subject to civil and criminal penalties.

Specific Instructions

Line 1

You must enter one of the following on this line; **do not** leave this line blank. The name should match the name on your tax return.

If this Form W-9 is for a joint account (other than an account maintained by a foreign financial institution (FFI)), list first, and then circle, the name of the person or entity whose number you entered in Part I of Form W-9. If you are providing Form W-9 to an FFI to document a joint account, each holder of the account that is a U.S. person must provide a Form W-9.

a. **Individual.** Generally, enter the name shown on your tax return. If you have changed your last name without informing the Social Security Administration (SSA) of the name change, enter your first name, the last name as shown on your social security card, and your new last name.

Note: ITIN applicant: Enter your individual name as it was entered on your Form W-7 application, line 1a. This should also be the same as the name you entered on the Form 1040/1040A/1040EZ you filed with your application.

b. **Sole proprietor or single-member LLC.** Enter your individual name as shown on your 1040/1040A/1040EZ on line 1. You may enter your business, trade, or "doing business as" (DBA) name on line 2.

c. **Partnership, LLC that is not a single-member LLC, C corporation, or S corporation.** Enter the entity's name as shown on the entity's tax return on line 1 and any business, trade, or DBA name on line 2.

d. **Other entities.** Enter your name as shown on required U.S. federal tax documents on line 1. This name should match the name shown on the charter or other legal document creating the entity. You may enter any business, trade, or DBA name on line 2.

e. **Disregarded entity.** For U.S. federal tax purposes, an entity that is disregarded as an entity separate from its owner is treated as a "disregarded entity." See Regulations section 301.7701-2(c)(2)(iii). Enter the owner's name on line 1. The name of the entity entered on line 1 should never be a disregarded entity. The name on line 1 should be the name shown on the income tax return on which the income should be reported. For example, if a foreign LLC that is treated as a disregarded entity for U.S. federal tax purposes has a single owner that is a U.S. person, the U.S. owner's name is required to be provided on line 1. If the direct owner of the entity is also a disregarded entity, enter the first owner that is not disregarded for federal tax purposes. Enter the disregarded entity's name on line 2, "Business name/disregarded entity name." If the owner of the disregarded entity is a foreign person, the owner must complete an appropriate Form W-8 instead of a Form W-9. This is the case even if the foreign person has a U.S. TIN.

Line 2

If you have a business name, trade name, DBA name, or disregarded entity name, you may enter it on line 2.

Line 3

Check the appropriate box on line 3 for the U.S. federal tax classification of the person whose name is entered on line 1. Check only one box on line 3.

IF the entity/person on line 1 is a(n) . . .	THEN check the box for . . .
• Corporation	Corporation
• Individual • Sole proprietorship, or • Single-member limited liability company (LLC) owned by an individual and disregarded for U.S. federal tax purposes.	Individual/sole proprietor or single-member LLC
• LLC treated as a partnership for U.S. federal tax purposes, • LLC that has filed Form 8832 or 2553 to be taxed as a corporation, or • LLC that is disregarded as an entity separate from its owner but the owner is another LLC that is not disregarded for U.S. federal tax purposes.	Limited liability company and enter the appropriate tax classification. (P= Partnership; C= C corporation; or S= S corporation)
• Partnership	Partnership
• Trust/estate	Trust/estate

Line 4, Exemptions

If you are exempt from backup withholding and/or FATCA reporting, enter in the appropriate space on line 4 any code(s) that may apply to you.

Exempt payee code.

- Generally, individuals (including sole proprietors) are not exempt from backup withholding.
- Except as provided below, corporations are exempt from backup withholding for certain payments, including interest and dividends.
- Corporations are not exempt from backup withholding for payments made in settlement of payment card or third party network transactions.
- Corporations are not exempt from backup withholding with respect to attorneys' fees or gross proceeds paid to attorneys, and corporations that provide medical or health care services are not exempt with respect to payments reportable on Form 1099-MISC.

The following codes identify payees that are exempt from backup withholding. Enter the appropriate code in the space in line 4.

1—An organization exempt from tax under section 501(a), any IRA, or a custodial account under section 403(b)(7) if the account satisfies the requirements of section 401(f)(2)

2—The United States or any of its agencies or instrumentalities

3—A state, the District of Columbia, a U.S. commonwealth or possession, or any of their political subdivisions or instrumentalities

4—A foreign government or any of its political subdivisions, agencies, or instrumentalities

5—A corporation

6—A dealer in securities or commodities required to register in the United States, the District of Columbia, or a U.S. commonwealth or possession

7—A futures commission merchant registered with the Commodity Futures Trading Commission

8—A real estate investment trust

9—An entity registered at all times during the tax year under the Investment Company Act of 1940

10—A common trust fund operated by a bank under section 584(a)

11—A financial institution

12—A middleman known in the investment community as a nominee or custodian

13—A trust exempt from tax under section 664 or described in section 4947

The following chart shows types of payments that may be exempt from backup withholding. The chart applies to the exempt payees listed above, 1 through 13.

IF the payment is for . . .	THEN the payment is exempt for . . .
Interest and dividend payments	All exempt payees except for 7
Broker transactions	Exempt payees 1 through 4 and 6 through 11 and all C corporations. S corporations must not enter an exempt payee code because they are exempt only for sales of noncovered securities acquired prior to 2012.
Barter exchange transactions and patronage dividends	Exempt payees 1 through 4
Payments over $600 required to be reported and direct sales over $5,000[1]	Generally, exempt payees 1 through 5[2]
Payments made in settlement of payment card or third party network transactions	Exempt payees 1 through 4

[1] See Form 1099-MISC, Miscellaneous Income, and its instructions.

[2] However, the following payments made to a corporation and reportable on Form 1099-MISC are not exempt from backup withholding: medical and health care payments, attorneys' fees, gross proceeds paid to an attorney reportable under section 6045(f), and payments for services paid by a federal executive agency.

Exemption from FATCA reporting code. The following codes identify payees that are exempt from reporting under FATCA. These codes apply to persons submitting this form for accounts maintained outside of the United States by certain foreign financial institutions. Therefore, if you are only submitting this form for an account you hold in the United States, you may leave this field blank. Consult with the person requesting this form if you are uncertain if the financial institution is subject to these requirements. A requester may indicate that a code is not required by providing you with a Form W-9 with "Not Applicable" (or any similar indication) written or printed on the line for a FATCA exemption code.

A—An organization exempt from tax under section 501(a) or any individual retirement plan as defined in section 7701(a)(37)

B—The United States or any of its agencies or instrumentalities

C—A state, the District of Columbia, a U.S. commonwealth or possession, or any of their political subdivisions or instrumentalities

D—A corporation the stock of which is regularly traded on one or more established securities markets, as described in Regulations section 1.1472-1(c)(1)(i)

E—A corporation that is a member of the same expanded affiliated group as a corporation described in Regulations section 1.1472-1(c)(1)(i)

F—A dealer in securities, commodities, or derivative financial instruments (including notional principal contracts, futures, forwards, and options) that is registered as such under the laws of the United States or any state

G—A real estate investment trust

H—A regulated investment company as defined in section 851 or an entity registered at all times during the tax year under the Investment Company Act of 1940

I—A common trust fund as defined in section 584(a)

J—A bank as defined in section 581

K—A broker

L—A trust exempt from tax under section 664 or described in section 4947(a)(1)

M—A tax exempt trust under a section 403(b) plan or section 457(g) plan

Note: You may wish to consult with the financial institution requesting this form to determine whether the FATCA code and/or exempt payee code should be completed.

Line 5

Enter your address (number, street, and apartment or suite number). This is where the requester of this Form W-9 will mail your information returns. If this address differs from the one the requester already has on file, write NEW at the top. If a new address is provided, there is still a chance the old address will be used until the payor changes your address in their records.

Line 6

Enter your city, state, and ZIP code.

Part I. Taxpayer Identification Number (TIN)

Enter your TIN in the appropriate box. If you are a resident alien and you do not have and are not eligible to get an SSN, your TIN is your IRS individual taxpayer identification number (ITIN). Enter it in the social security number box. If you do not have an ITIN, see *How to get a TIN* below.

If you are a sole proprietor and you have an EIN, you may enter either your SSN or EIN.

If you are a single-member LLC that is disregarded as an entity separate from its owner, enter the owner's SSN (or EIN, if the owner has one). Do not enter the disregarded entity's EIN. If the LLC is classified as a corporation or partnership, enter the entity's EIN.

Note: See *What Name and Number To Give the Requester,* later, for further clarification of name and TIN combinations.

How to get a TIN. If you do not have a TIN, apply for one immediately. To apply for an SSN, get Form SS-5, Application for a Social Security Card, from your local SSA office or get this form online at *www.SSA.gov*. You may also get this form by calling 1-800-772-1213. Use Form W-7, Application for IRS Individual Taxpayer Identification Number, to apply for an ITIN, or Form SS-4, Application for Employer Identification Number, to apply for an EIN. You can apply for an EIN online by accessing the IRS website at *www.irs.gov/Businesses* and clicking on Employer Identification Number (EIN) under Starting a Business. Go to *www.irs.gov/Forms* to view, download, or print Form W-7 and/or Form SS-4. Or, you can go to *www.irs.gov/OrderForms* to place an order and have Form W-7 and/or SS-4 mailed to you within 10 business days.

If you are asked to complete Form W-9 but do not have a TIN, apply for a TIN and write "Applied For" in the space for the TIN, sign and date the form, and give it to the requester. For interest and dividend payments, and certain payments made with respect to readily tradable instruments, generally you will have 60 days to get a TIN and give it to the requester before you are subject to backup withholding on payments. The 60-day rule does not apply to other types of payments. You will be subject to backup withholding on all such payments until you provide your TIN to the requester.

Note: Entering "Applied For" means that you have already applied for a TIN or that you intend to apply for one soon.

Caution: A disregarded U.S. entity that has a foreign owner must use the appropriate Form W-8.

Part II. Certification

To establish to the withholding agent that you are a U.S. person, or resident alien, sign Form W-9. You may be requested to sign by the withholding agent even if item 1, 4, or 5 below indicates otherwise.

For a joint account, only the person whose TIN is shown in Part I should sign (when required). In the case of a disregarded entity, the person identified on line 1 must sign. Exempt payees, see *Exempt payee code,* earlier.

Signature requirements. Complete the certification as indicated in items 1 through 5 below.

1. Interest, dividend, and barter exchange accounts opened before 1984 and broker accounts considered active during 1983. You must give your correct TIN, but you do not have to sign the certification.

2. Interest, dividend, broker, and barter exchange accounts opened after 1983 and broker accounts considered inactive during 1983. You must sign the certification or backup withholding will apply. If you are subject to backup withholding and you are merely providing your correct TIN to the requester, you must cross out item 2 in the certification before signing the form.

3. Real estate transactions. You must sign the certification. You may cross out item 2 of the certification.

4. Other payments. You must give your correct TIN, but you do not have to sign the certification unless you have been notified that you have previously given an incorrect TIN. "Other payments" include payments made in the course of the requester's trade or business for rents, royalties, goods (other than bills for merchandise), medical and health care services (including payments to corporations), payments to a nonemployee for services, payments made in settlement of payment card and third party network transactions, payments to certain fishing boat crew members and fishermen, and gross proceeds paid to attorneys (including payments to corporations).

5. Mortgage interest paid by you, acquisition or abandonment of secured property, cancellation of debt, qualified tuition program payments (under section 529), ABLE accounts (under section 529A), IRA, Coverdell ESA, Archer MSA or HSA contributions or distributions, and pension distributions. You must give your correct TIN, but you do not have to sign the certification.

What Name and Number To Give the Requester

For this type of account:	Give name and SSN of:
1. Individual	The individual
2. Two or more individuals (joint account) other than an account maintained by an FFI	The actual owner of the account or, if combined funds, the first individual on the account[1]
3. Two or more U.S. persons (joint account maintained by an FFI)	Each holder of the account
4. Custodial account of a minor (Uniform Gift to Minors Act)	The minor[2]
5. a. The usual revocable savings trust (grantor is also trustee)	The grantor-trustee[1]
b. So-called trust account that is not a legal or valid trust under state law	The actual owner[1]
6. Sole proprietorship or disregarded entity owned by an individual	The owner[3]
7. Grantor trust filing under Optional Form 1099 Filing Method 1 (see Regulations section 1.671-4(b)(2)(i)(A))	The grantor*
For this type of account:	**Give name and EIN of:**
8. Disregarded entity not owned by an individual	The owner
9. A valid trust, estate, or pension trust	Legal entity[4]
10. Corporation or LLC electing corporate status on Form 8832 or Form 2553	The corporation
11. Association, club, religious, charitable, educational, or other tax-exempt organization	The organization
12. Partnership or multi-member LLC	The partnership
13. A broker or registered nominee	The broker or nominee
14. Account with the Department of Agriculture in the name of a public entity (such as a state or local government, school district, or prison) that receives agricultural program payments	The public entity
15. Grantor trust filing under the Form 1041 Filing Method or the Optional Form 1099 Filing Method 2 (see Regulations section 1.671-4(b)(2)(i)(B))	The trust

[1] List first and circle the name of the person whose number you furnish. If only one person on a joint account has an SSN, that person's number must be furnished.

[2] Circle the minor's name and furnish the minor's SSN.

[3] You must show your individual name and you may also enter your business or DBA name on the "Business name/disregarded entity" name line. You may use either your SSN or EIN (if you have one), but the IRS encourages you to use your SSN.

[4] List first and circle the name of the trust, estate, or pension trust. (Do not furnish the TIN of the personal representative or trustee unless the legal entity itself is not designated in the account title.) Also see *Special rules for partnerships,* earlier.

***Note:** The grantor also must provide a Form W-9 to trustee of trust.

Note: If no name is circled when more than one name is listed, the number will be considered to be that of the first name listed.

Secure Your Tax Records From Identity Theft

Identity theft occurs when someone uses your personal information such as your name, SSN, or other identifying information, without your permission, to commit fraud or other crimes. An identity thief may use your SSN to get a job or may file a tax return using your SSN to receive a refund.

To reduce your risk:

- Protect your SSN,
- Ensure your employer is protecting your SSN, and
- Be careful when choosing a tax preparer.

If your tax records are affected by identity theft and you receive a notice from the IRS, respond right away to the name and phone number printed on the IRS notice or letter.

If your tax records are not currently affected by identity theft but you think you are at risk due to a lost or stolen purse or wallet, questionable credit card activity or credit report, contact the IRS Identity Theft Hotline at 1-800-908-4490 or submit Form 14039.

For more information, see Pub. 5027, Identity Theft Information for Taxpayers.

Victims of identity theft who are experiencing economic harm or a systemic problem, or are seeking help in resolving tax problems that have not been resolved through normal channels, may be eligible for Taxpayer Advocate Service (TAS) assistance. You can reach TAS by calling the TAS toll-free case intake line at 1-877-777-4778 or TTY/TDD 1-800-829-4059.

Protect yourself from suspicious emails or phishing schemes. Phishing is the creation and use of email and websites designed to mimic legitimate business emails and websites. The most common act is sending an email to a user falsely claiming to be an established legitimate enterprise in an attempt to scam the user into surrendering private information that will be used for identity theft.

The IRS does not initiate contacts with taxpayers via emails. Also, the IRS does not request personal detailed information through email or ask taxpayers for the PIN numbers, passwords, or similar secret access information for their credit card, bank, or other financial accounts.

If you receive an unsolicited email claiming to be from the IRS, forward this message to *phishing@irs.gov.* You may also report misuse of the IRS name, logo, or other IRS property to the Treasury Inspector General for Tax Administration (TIGTA) at 1-800-366-4484. You can forward suspicious emails to the Federal Trade Commission at *spam@uce.gov* or report them at *www.ftc.gov/complaint.* You can contact the FTC at *www.ftc.gov/idtheft* or 877-IDTHEFT (877-438-4338). If you have been the victim of identity theft, see *www.IdentityTheft.gov* and Pub. 5027.

Visit *www.irs.gov/IdentityTheft* to learn more about identity theft and how to reduce your risk.

Privacy Act Notice

Section 6109 of the Internal Revenue Code requires you to provide your correct TIN to persons (including federal agencies) who are required to file information returns with the IRS to report interest, dividends, or certain other income paid to you; mortgage interest you paid; the acquisition or abandonment of secured property; the cancellation of debt; or contributions you made to an IRA, Archer MSA, or HSA. The person collecting this form uses the information on the form to file information returns with the IRS, reporting the above information. Routine uses of this information include giving it to the Department of Justice for civil and criminal litigation and to cities, states, the District of Columbia, and U.S. commonwealths and possessions for use in administering their laws. The information also may be disclosed to other countries under a treaty, to federal and state agencies to enforce civil and criminal laws, or to federal law enforcement and intelligence agencies to combat terrorism. You must provide your TIN whether or not you are required to file a tax return. Under section 3406, payers must generally withhold a percentage of taxable interest, dividend, and certain other payments to a payee who does not give a TIN to the payer. Certain penalties may also apply for providing false or fraudulent information.

EVALUATION FORM

RFP No. 23-0706200 Feasibility Study for Parking Meters

Criterion	Weight	Description
Experience and Qualifications	50%	Number of years providing Feasibility Study services. Qualifications and experience of assigned staff. Licensing. Adherence to requirements, forms and qualifications listed in this RFP.
References	10%	Performance of similar services for governmental clients including at least two references.
Resources and Approach	30%	Adequate resources. Proposed plan and approach to fulfilling scope.
Price Proposal	10%	Cost of proposed services.
Total	**100%**	

Rating Scale	
0	Fails to Fit
1	Poor Fit
2	Fair Fit
3	Good Fit
4	Very Good Fit
5	Excellent Fit

EVALUATION FORM

RFP No. 23-0706200 Feasibility Study for Parking Meters

By signing this form as an Evaluator, I certify that I have no conflict of interest.

Reviewer Name: _____ **Date:** _____

Signature: _____

Firm Name: Walker Consultants

Evaluation

Criterion	Rating
Experience and Qualifications	
References	
Resources and Approach	
Price Proposal	

Notes:

Firm Name: SP Plus Corporation

Evaluation

Criterion	Rating
Experience and Qualifications	
References	
Resources and Approach	
Price Proposal	

Notes:

Firm Name: THA Consulting

Evaluation

Criterion	Rating
Experience and Qualifications	
References	
Resources and Approach	
Price Proposal	

Notes:

EVALUATION MATRIX

RFP No. 23-0706200
Feasibility Study for Parking Meters

Firm Name: Walker Consultants

Evaluation

Reviewer Name:		Gregory Gay		Zonya Ray		Airia Austin		King Leonard		Adelina Gross	
Criterion	**Weight**	**Rating**	**Score**	**Rating**	**Score**	**Rating**	**Score**	**Rating**	**Score**	**Rating**	**Score**
Experience and Qualification	50%	4	2.00	5	2.50	4	2.00	4	2.00	5	2.50
Resources and Approach	30%	4	1.20	4	1.20	5	1.50	5	1.50	5	1.50
References	10%	4	0.40	4	0.40	3	0.30	2	0.20	5	0.50
Proposed Fee	10%	3	0.30	5	0.50	4	0.40	4	0.40	5	0.50
Total	**100%**		**3.90**		**4.60**		**4.20**		**4.10**		**5.00**

Firm Name: SP Plus Corporation

Evaluation

Reviewer Name:		Gregory Gay		Zonya Ray		Airia Austin		King Leonard		Adelina Gross	
Criterion	**Weight**	**Rating**	**Score**	**Rating**	**Score**	**Rating**	**Score**	**Rating**	**Score**	**Rating**	**Score**
Experience and Qualification	50%	4	2.00	5	2.50	5	2.50	4	2.00	5	2.50
Resources and Approach	30%	4	1.20	5	1.50	5	1.50	4	1.20	5	1.50
References	10%	3	0.30	5	0.50	4	0.40	4	0.40	5	0.50
Proposed Fee	10%	3	0.30	5	0.50	5	0.50	4	0.40	5	0.50
Total	**100%**		**3.80**		**5.00**		**4.90**		**4.00**		**5.00**

Firm Name: THA Consulting

Evaluation

Reviewer Name:		Gregory Gay		Zonya Ray		Airia Austin		King Leonard		Adelina Gross	
Criterion	**Weight**	**Rating**	**Score**	**Rating**	**Score**	**Rating**	**Score**	**Rating**	**Score**	**Rating**	**Score**
Experience and Qualification	50%	4	2.00	5	2.50	3	1.50	4	2.00	5	2.50
Resources and Approach	30%	4	1.20	3	0.90	3	0.90	4	1.20	4	1.20
References	10%	4	0.40	5	0.50	5	0.50	4	0.40	3	0.30
Proposed Fee	10%	3	0.30	2	0.20	3	0.30	1	0.10	2	0.20
Total	**100%**		**3.90**		**4.10**		**3.20**		**3.70**		**4.20**

EVALUATION MATRIX

RFP No. 23-0706200
Feasibility Study for Parking Meters

Firm Name:

Evaluation

Reviewer Name:		Gregory Gay		Zonya Ray		Airia Austin		King Leonard		Adelina Gross	
Criterion	**Weight**	**Rating**	**Score**	**Rating**	**Score**	**Rating**	**Score**	**Rating**	**Score**	**Rating**	**Score**
Experience and Qualification	50%	0	0.00	0	0.00	0	0.00	0	0.00	0	0.00
Resources and Approach	30%	0	0.00	0	0.00	0	0.00	0	0.00	0	0.00
References	10%	0	0.00	0	0.00	0	0.00	0	0.00	0	0.00
Proposed Fee	10%	0	0.00	0	0.00	0	0.00	0	0.00	0	0.00
Total	**100%**		**0.00**		**0.00**		**0.00**		**0.00**		**0.00**

Firm Name:

Evaluation

Reviewer Name:		Gregory Gay		Zonya Ray		Airia Austin		King Leonard		Adelina Gross	
Criterion	**Weight**	**Rating**	**Score**	**Rating**	**Score**	**Rating**	**Score**	**Rating**	**Score**	**Rating**	**Score**
Experience and Qualification	50%	0	0.00	0	0.00	0	0.00	0	0.00	0	0.00
Resources and Approach	30%	0	0.00	0	0.00	0	0.00	0	0.00	0	0.00
References	10%	0	0.00	0	0.00	0	0.00	0	0.00	0	0.00
Proposed Fee	10%	0	0.00	0	0.00	0	0.00	0	0.00	0	0.00
Total	**100%**		**0.00**		**0.00**		**0.00**		**0.00**		**0.00**

FIRM SELECTED

Reviewer:

	Walker Consultants	SP Plus Corporation	THA Consulting	0	0
Gregory Gay	3.90	3.80	3.20	0.00	0.00
Zonya Ray	4.60	5.00	4.10	0.00	0.00
Airia Austin	4.20	4.90	3.20	0.00	0.00
King Leonard	4.10	4.00	3.70	0.00	0.00
Adelina Gross	5.00	5.00	4.20	0.00	0.00
AVERAGE RATING	**4.36**	**4.54**	**3.68**	**0.00**	**0.00**

CITY OF OPA-LOCKA

RFP NO: 23-0706200

JULY 19, 2023 @ 1:00 P.M.

Evaluation Committee Meeting, 780 FISHERMAN STREET, 4th floor, OPA-LOCKA, FL 33054

NAME	COMPANY NAME	EMAIL	PHONE #
Jay Bergel	City of Opa-locka	jbergel@opalockafl.gov	305-953-2898
Adetra Gross	City of Opa-locka	agross@opalockafl.gov	305 953 2868
RICHARD AUSTIN	CITY OF OPA-LOCKA	RAUSTIN@OPALOCKAFL.GOV	305-321-2595
Shamecca Lawson	City of Opa-locka	slawson@opalockafl.gov	slawson@opalockafl.gov
GREGORY GRAY	CITY OF OPALOCKA	GGRAY@OPALOCKAFL.GOV	305 953 2868 ext 1801
Zonya C. Ray	City of Opalocka	zray@opalockafl.gov	305-546-5700
King Leonard	City of Opa-locka	kleonard@opalockafl.gov	305-528-4386

EVALUATION FORM

RFP No. 23-0706200 FEASIBILITY STUDY TO INSTALL PARKING METERS

By signing this form as an Evaluator, I certify that I have no conflict of interest.

Reviewer Name: AIRIA AUSTIN **Date:** 07-19-2023

Signature: [illegible]

Firm Name: 16 Walker Consultants

Evaluation

Criterion	Rating	Notes:
Experience and Qualifications	4	BEEN IN BUSINESS SINCE 1965
References	5	REFERENCES ARE WELL ROUNDED
Resources and Approach	3	THEIR RESOURCES COVERS A BROAD SPECTRUM
Price Proposal	4	

Firm Name: SP Plus Corporation

Evaluation

Criterion	Rating	Notes:
Experience and Qualifications	5	HAVE BEEN IN BUSINESS FOR A VERY LONG TIME
References	5	WIDE VARITY OF REFERENCES RESOURCES
Resources and Approach	4	APPROACH IS VERY SOUND SO IS
Price Proposal	5	IT APPEARS THAT THEIR RESOURCES RESULTS IN LOW PRICES

Firm Name: THA Consulting

Evaluation

Criterion	Rating	Notes:
Experience and Qualifications	3	REALITIVE YOUNG COMPANY.
References	3	NOT SUBSTANTIAL
Resources and Approach	5	SHOWS THE ABILITY TO QUICKLY RAMP UP SERVICES
Price Proposal	3	PRICING SEEMS VERY HIGH BASED ON THE AREAS

EVALUATION FORM

RFP No. 23-0706200 FEASIBILITY STUDY TO INSTALL PARKING METERS

By signing this form as an Evaluator, I certify that I have no conflict of interest.

Reviewer Name: GREGORY D. GAY **Date:** 2/19/2023

Signature:

Firm Name: Walker Consultants

Evaluation

Criterion	Rating
Experience and Qualifications	4
References	4
Resources and Approach	4
Price Proposal	3

Notes:

APPEARS TO HAVE LARGE AMOUNT OF EXPERIENCE IN FLORIDA. BASED IN MICHIGAN FORMED IN 1965 LICENSED IN FLORIDA
MANY FLORIDA MUNICIPALITIES REFERENCED
STANDARD APPROACH 8 WEEK TIMELINE
PRICE IS AVERAGE SIMILAR TO OTHERS

Firm Name: SP Plus Corporation

Evaluation

Criterion	Rating
Experience and Qualifications	4
References	4
Resources and Approach	3
Price Proposal	3

Notes:

94 YEARS OF EXPERIENCES WITH 41 YEARS IN FLORIDA
EXPERIENCE WITH NUMEROUS MUNICIPALITIES
MOST RECENT REFERENCES GAINESVILLE/HOMESTEAD/DORAL
SIX MONTH TIMELINE SEEMS TO LONG FOR SMALL CITY
PRICE IS HIGHER THAN AVERAGE RANGE SIMILAR TO OTHERS

Firm Name: THA Consulting

Evaluation

Criterion	Rating
Experience and Qualifications	4
References	4
Resources and Approach	4
Price Proposal	3

Notes:

29 YEAR OF EXPERIENCES
EXPERIENCE IN NUMEROUS FLORIDA MUNICIPALITIES
MOST RECENT REFERENCES CLEARWATER/CORAL GABLES/DACRA
8-12 WEEKS TIMELINE
PRICE IS A LITTLE HIGHER THAN AVERAGE SIMILAR TO OTHER
THERE IS A LOWER 8 WEEK CONTRACT FOR UNDER $20K

EVALUATION FORM

RFP No. 23-0706200 FEASIBILITY STUDY TO INSTALL PARKING METERS

By signing this form as an Evaluator, I certify that I have no conflict of interest.

Reviewer Name: King Leonard **Date:** 7/19/23

Signature:

Firm Name: Walker Consultants

Evaluation

Criterion	Rating
Experience and Qualifications	4
References	5
Resources and Approach	2
Price Proposal	4

Notes: Approach not Adequate

Firm Name: SP Plus Corporation

Evaluation

Criterion	Rating
Experience and Qualifications	4
References	4
Resources and Approach	4
Price Proposal	4

Notes: Very good Presention

Firm Name: THA Consulting

Evaluation

Criterion	Rating
Experience and Qualifications	4
References	4
Resources and Approach	4
Price Proposal	1

Notes: Price is very High

EVALUATION FORM

RFP No. 23-0706200 FEASIBILITY STUDY TO INSTALL PARKING METERS

By signing this form as an Evaluator, I certify that I have no conflict of interest.

Reviewer Name: Zonya C. Ray **Date:** 7/19/23

Signature:

Firm Name: Walker Consultants

Evaluation

Criterion	Rating
Experience and Qualifications	5
References	4
Resources and Approach	4
Price Proposal	5

Notes: Well done

Firm Name: SP Plus Corporation

Evaluation

Criterion	Rating
Experience and Qualifications	5
References	5
Resources and Approach	5
Price Proposal	5

Notes: The Company has put everything in order and Presentation was Excellent.

Firm Name: THA Consulting

Evaluation

Criterion	Rating
Experience and Qualifications	5
References	3
Resources and Approach	5
Price Proposal	2

Notes: Several High Cost for this project.

EVALUATION FORM

RFP No. 23-0706200 FEASIBILITY STUDY TO INSTALL PARKING METERS

By signing this form as an Evaluator, I certify that I have no conflict of interest.

Reviewer Name: Adelina Gross **Date:** 07/19/2023

Signature: Adelina Gross

Firm Name: 20 Walker Consultants

Evaluation

Criterion	Rating
Experience and Qualifications	5
References	5
Resources and Approach	5
Price Proposal	5

Notes: Cost and experience presented by the vendor seems to be within the City expectations for this project.

Firm Name: 20 SP Plus Corporation

Evaluation

Criterion	Rating
Experience and Qualifications	5
References	5
Resources and Approach	5
Price Proposal	5

Notes: Company has a vast experience with municipalities and this type of projects price breakdown is clear and communication to stakeholders residents as part of the proposal

Firm Name: 15 THA Consulting

Evaluation

Criterion	Rating
Experience and Qualifications	5
References	4
Resources and Approach	3
Price Proposal	2

Notes: Company did not had a clear idea of the requested work for this project

CITY OF OPA-LOCKA
FEASIBILITY STUDY TO INSTALL PARKING METERS WITHIN THE CITY
AGREEMENT

THIS IS AN AGREEMENT, dated the_____day of_____, 2023, between:

THE CITY OF OPA-LOCKA, a Florida municipal corporation,
hereinafter "CITY"

and

SP PLUS CORPORATION D/B/A SP+ CONSULTING SERVICES, a Florida Limited Liability Company, hereinafter "CONTRACTOR."

WITNESSETH:

In consideration of the mutual terms and conditions, promises, covenants, and payments hereinafter set forth, CITY and CONTRACTOR agree as follows:

ARTICLE 1
PREAMBLE

In order to establish the background, context and form of reference for this Agreement and to generally express the objectives, and intentions, of the respective parties herein, the following statements, representations and explanations shall be accepted as predicates for the undertakings and commitments included within the provisions which follow and may be relied upon by the parties as essential elements of the mutual considerations upon which this Agreement is based.

1.1 CITY is in need of a CONTRACTOR to provide the services to conduct a Feasibility Study to Install Parking Meters within the City.

1.2 CITY has a strong commitment to provide the services with the experience and qualifications, references, resources and approach and price proposal.

1.3 CITY issued RFP NO. 23-0706200 ("RFP"), seeking a professional company with the knowledge and ability to perform the services sought.

1.4 At its meeting of, July 19, 2023 CITY evaluated CONTRACTOR to perform the services needed to conduct a Feasibility Study to Install Parking Meters within the City and at the City Commission meeting of October 25, 2023, the City Commission selected CONTRACTOR to perform the needed work.

ARTICLE 2
SCOPE OF WORK

2.1 CONTRACTOR shall furnish all the materials, tools, supplies, and labor necessary to perform all of the work described in the Request for Qualifications RFP 23-0706200, a copy of which is attached hereto and specifically made a part of this Agreement as Exhibit "A", and the Scope of Services attached hereto as Exhibit "B".

2.2 CONTRACTOR shall abide by all specifications outlined in RFP 23-0706200.

2.3 CONTRACTOR hereby represents to CITY, with full knowledge that CITY is relying upon these representations when entering into this Agreement with CONTRACTOR, and that CONTRACTOR has the professional expertise, experience and manpower to perform the services to be provided by CONTRACTOR as set forth in CONTRACTOR's response to RFP.

2.4 CONTRACTOR assumes professional and technical responsibility for performance of its services to be provided hereunder in accordance with applicable recognized professional standards and relevant Florida Statutes.

ARTICLE 3
COMMENCEMENT OF SERVICES

3.1 The CONTRACTOR shall commence work as directed by CITY upon the effective date this Agreement is executed by both parties.

ARTICLE 4
COMPENSATION

4.1 CONTRACTOR will perform the services at a total cost to City of Forty-One Thousand, Three Hundred Seventy-Five Dollars ($41,375.00) to conduct the study and provide a report.

4.2 CONTRACTOR shall be solely responsible for and shall provide for the payment of workers compensation insurance coverage and premium, and all other insurance pursuant to Article 5 below, withholding taxes, FICA, pension and profit-sharing contributions, retirement contributions, if any, all remunerations; all labor contract compliance, and all other charges, fees, permits and expenses associated with the employment of such personnel provided by CONTRACTOR hereunder. CITY shall bear no responsibility for any such charge, fees, permits or expenses associated with the employment of such personnel by CONTRACTOR.

4.3 Payment to CONTRACTOR for all tasks and charges under this Agreement shall be based on the following conditions:

A. Disbursements. There are no reimbursable expenses associated with this Agreement.

B. Payment Schedule. Invoices received from CONTRACTOR pursuant to this Agreement will be reviewed by the appropriate financial staff. If services have been rendered in conformity with the Agreement, the invoice will be sent to the City of Opa-locka's Finance Department for payment and may need to be subsequently approved by the State of Florida.

C. Availability of Funds. CITY's performance and obligation to pay under this Agreement is contingent upon an annual appropriation from the CITY.

4.4 The making and acceptance of the final payment shall constitute a waiver of all claims by the CITY. It shall also constitute a waiver of all claims by the CONTRACTOR, except those previously made and still unsettled.

ARTICLE 5
CONTRACTOR'S LIABILITY INSURANCE

5.1 The CONTRACTOR shall not commence work under this contract until it has obtained all insurance required under this paragraph and such insurance has been approved by the CITY nor shall the CONTRACTOR allow any Subcontractor to commence work on his sub-contract until all similar such insurance required of the subcontractor has been obtained and approved.

5.2 Certificates of insurance, reflecting evidence of the required insurance, shall be filed with the CITY prior to the commencement of the work. These Certificates shall contain a provision that coverage afforded under these policies will not be canceled until at least thirty days (30) prior written notice has been given to the CITY. Policies shall be issued by companies authorized to do business under the laws of the State of Florida.

5.3 Insurance shall be in force until all work required to be performed under the terms of the Contract is satisfactorily completed as evidenced by the formal acceptance by the CITY. In the event the insurance certificate provided indicates that the insurance shall terminate and lapse during the period of this contract, then in that event, the CONTRACTOR shall furnish, at least thirty (30) days prior to the expiration of the date of such insurance, a renewed certificate of insurance as proof that equal and like coverage for the balance of the period of the contract and extension thereunder is in effect. The CONTRACTOR shall not continue to work pursuant to this contract unless all required insurance remains in full force and effect.

5.4 Comprehensive General Liability insurance to cover bodily injury liability and property damage liability with minimum limits of One Million Dollars ($1,000,000.00) per occurrences. Exposures to be covered are:

- Premises and Operation

- Products/Completed Operations
- Broad Form Property Damages
- Broad Form Contractual Coverage applicable to this specific Agreement, including any hold harmless and/or indemnification agreement.
- Personal Injury Coverage with Employee and Contractual Exclusions removed, with minim limits of coverage equal to those required for Bodily Injury Liability and Property Damage Liability.

Business Automobile Liability with minimum limits of Three Hundred Thousand ($300,000) per occurrence, combined single limit for Bodily Injury Liability and Property Damage Liability. Coverage must be afforded on a form no more restrictive than the latest edition of the Business Automobile Liability policy, without restrictive endorsements, and must include:

- Owned vehicles
- Hired and Non-Owned Vehicles
- Employers' Non-Ownership.

5.5 The CONTRACTOR shall hold the CITY, the City of Opa-Locka their agents, and employees, harmless on account of claims for damages to persons, property or premises arising out of the operations to complete this Agreement and name the CITY as an additional insured under their policy.

5.6 The CITY reserves the right to require any other insurance coverage it deems necessary depending upon the exposures.

ARTICLE 6
PROTECTION OF PROPERTY

6.1 At all times during the performance of this Contract, the CONTRACTOR shall protect the CITY's property and properties adjoining the Project site from all damage whatsoever on account of the work being carried on pursuant to this Agreement.

ARTICLE 7
CONTRACTOR'S INDEMNIFICATION

7.1 The CONTRACTOR agrees to release the CITY from and against any and all liability and responsibility in connection with the above-mentioned matters. The CONTRACTOR further agrees not to sue or seek any money or damages from CITY in connection with the above-mentioned matters, except in the event that the CITY fails to pay to CONTRACTOR the fees and costs as provided for in Article 4 herein.

7.2 The CONTRACTOR agrees to indemnify and hold harmless the CITY, its trustees, elected and appointed officers, agents, servants and employees, from and against any and all claims, demands, or causes of action of whatsoever kind or nature, and the resulting losses, costs, expenses, reasonable attorneys' fees, liabilities, damages, orders, judgments, or decrees, sustained by the CITY or any third party arising out of, or by reason of, or resulting from the

CONTRACTOR's negligent acts, errors, or omissions.

7.3 If a court of competent jurisdiction holds the CITY liable for certain tortuous acts of its agents, officers, or employees, such liability shall be limited to the extent and limit provided in 768.28, Florida Statutes. This provision shall not be construed as a waiver of any right or defense that the CITY may possess. The CITY specifically reserves all rights as against all claims that may be brought.

ARTICLE 8
INDEPENDENT CONTRACTOR

8.1 This Agreement does not create an employee/employer relationship between the parties. It is the intent of the parties that the CONTRACTOR is an independent contractor under this Agreement and not the CITY's employee for all purposes, including but not limited to, the application of the Fair Labor Standards Act minimum wage and overtime payments, Federal Insurance Contribution Act, the Social Security Act, the Federal Unemployment Tax Act, the provisions of the Internal Revenue Code, the State Workers Compensation Act, and the State unemployment insurance law. The CONTRACTOR shall retain sole and absolute discretion in the judgment of the manner and means of carrying out the CONTRACTOR's activities and responsibilities hereunder provided. This Agreement shall not be construed as creating any joint employment relationship between the CONTRACTOR and the CITY and the CITY will not be liable for any obligation incurred by CONTRACTOR, including but not limited to unpaid minimum wages and/or overtime premiums.

ARTICLE 9
CONTRACT BOND

9.1 The bond requirements for this Agreement shall be as follows:

NOT APPLICABLE

ARTICLE 10
CHANGES TO SCOPE OF WORK AND ADDITIONAL WORK

10.1 CITY or CONTRACTOR may request changes that would increase, decrease or otherwise modify the Scope of Services/Basic Services to be provided under this Agreement as described in Article 2 of this Agreement. Such changes or additional services must be in accordance with a written amendment, executed by the parties hereto, with the same formality and with equality and dignity prior to any deviation from the terms of this Agreement, including the initiation of any additional or extra work. Each amendment shall at a minimum include the following information on each project:

PROJECT NAME
PROJECT DESCRIPTION
ESTIMATED PROJECT COST
ESTIMATED COST FOR ADDITION OR CHANGE TO PROJECT CONTRACT
ESTIMATED PROJECT COMPLETION DATE

10.2 In no event will the CONTRACTOR be compensated for any work which has not been described in a separate written agreement executed by the parties hereto.

ARTICLE 11
TERM AND TERMINATION

11.1 This Agreement shall commence upon execution of this Agreement and shall be effective for one year.

11.2 This Agreement may be terminated by either party for cause, or the CITY for convenience, upon thirty (30) days written notice by the CITY to CONTRACTOR in which event the CONTRACTOR shall be paid its compensation for services performed to termination date. In the event that the CONTRACTOR abandons this Agreement or causes it to be terminated, he shall indemnify the CITY against any loss pertaining to this termination up to a maximum of the full contracted fee amount. All finished or unfinished documents, data, studies, plans, surveys, and reports prepared by CONTRACTOR shall become the property of CITY and shall be delivered by CONTRACTOR to CITY.

ARTICLE 12
CONTRACT DOCUMENTS

12.1 CONTRACTOR and CITY hereby agree that the following Specification and Contract Documents, which are attached hereto and made a part thereof, are fully incorporated herein and made a part of this Agreement, as if written herein word for word: this Agreement; RFP 23-0706200, Exhibit "A", and the CONTRACTOR's Response to RFP, attached hereto as Exhibit "B".

ARTICLE 13
MISCELLANEOUS

13.1 Legal Representation. It is acknowledged that each party to this Agreement had the opportunity to be represented by counsel in the preparation of this Agreement and, accordingly, the rule that a contract shall be interpreted strictly against the party preparing same shall not apply due to the joint contribution of both parties.

13.2 Assignments. This Agreement, or any interest herein, shall not be assigned, transferred or otherwise encumbered, under any circumstances, by CONTRACTOR without the prior written consent of CITY. For purposes of this Agreement, any change of ownership of CONTRACTOR shall constitute an assignment which requires CITY approval. However, this Agreement shall run to the CITY and its successors and assigns.

13.3 Records. CONTRACTOR shall keep books and records and require any and all subcontractors to keep books and records as may be necessary in order to record complete and correct entries as to personnel hours charged to this engagement, and any expenses for which CONTRACTOR expects to be reimbursed, if applicable. Such books and records will

be available at all reasonable times for examination and audit by CITY and shall be kept for a period of three (3) years after the completion of all work to be performed pursuant to this Agreement. Incomplete or incorrect entries in such books and records will be grounds for disallowance by CITY of any fees or expenses based upon such entries.

CITY is a public agency subject to Chapter 119, Florida Statutes. To the extent CONTRACTOR is acting on behalf of CITY pursuant to Section 119.0701, Florida Statutes, CONTRACTOR shall:

a. Keep and maintain public records that ordinarily and necessarily would be required to be kept and maintained by CITY were CITY performing the services under this agreement;

b. Provide the public with access to such public records on the same terms and conditions that the County would provide the records and at a cost that does not exceed that provided in Chapter 119, Florida Statutes, or as otherwise provided by law;

c. Ensure that public records that are exempt or that are confidential and exempt from public record requirements are not disclosed except as authorized by law; and

d. Meet all requirements for retaining public records and transfer to CITY, at no cost, all public records in possession of the CONTRACTOR upon termination of this Agreement and destroy any duplicate public records that are exempt or confidential and exempt. All records stored electronically must be provided to the CITY.

e. **IF CONSULTANT HAS QUESTIONS REGARDING THE APPLICATION OF CHAPTER 119, FLORIDA STATUTES, TO CONSULTANT'S DUTY TO PROVIDE PUBLIC RECORDS RELATING TO THIS AGREEMENT, CONTACT THE CUSTODIAN OF PUBLIC RECORDS AT (305) 953-2800, email: jflores@Opalockafl.gov OR BY MAIL: City of** Opa-locka **– City Clerk's Office, 780 Fisherman Street, Opa-Locka, FL 33054.**

13.4 Ownership of Documents. Reports, surveys, plans, studies and other data provided in connection with this Agreement are and shall remain the property of CITY.

13.5 No Contingent Fees. CONTRACTOR warrants that it has not employed or retained any company or person, other than a bona fide employee working solely for the CONTRACTOR, to solicit or secure this Agreement, and that it has not paid or agreed to pay any person, company, corporation, individual or firm, other than a bona fide employee working solely for CONTRACTOR, any fee, commission, percentage, gift, or other consideration contingent upon or resulting from the award or making of this Agreement. For the breach or violation of this provision, the CITY shall have the right to terminate the Agreement without liability at its discretion, to deduct from the contract price, or otherwise recover the full amount of such fee, commission, percentage, gift or consideration.

13.6 Notice. Whenever any party desires to give notice unto any other party, it

must be given by written notice, sent by registered United States mail or national delivery service with verified confirmation. If by mail, with return receipt requested, addressed to the party for whom it is intended and the remaining party, at the places last specified, and the places for giving of notice shall remain such until they shall have been changed by written notice in compliance with the provisions of this section. For the present, the CONTRACTOR and the CITY designate the following as the respective places for giving of notice:

CITY: Darvin Williams, Interim City Manager
City of Opa-locka Municipal Complex
780 Fisherman Street, Fourth Floor
Opa-locka, FL 33054

Copy To: Burnadette Norris-Weeks, City Attorney
Burnadette Norris-Weeks, P.A.
401 North Avenue of the Arts
Fort Lauderdale, Florida 33311

Contractor:
Ritu Vig, President
SP Plus Corporation d/b/a SP+ Consulting Services
200 E. Randolph St.
Ste 7700
Chicago, Il 60601

13.7 Binding Authority. Each person signing this Agreement on behalf of either party individually warrants that he or she has full legal power to execute this Agreement on behalf of the party for whom he or she is signing, and to bind and obligate such party with respect to all provisions contained in this Agreement.

13.8 Exhibits. Each Exhibit referred to in this Agreement forms an essential part of this Agreement. The exhibits if not physically attached should be treated as part of this Agreement and are incorporated herein by reference.

13.9 Headings. Headings herein are for convenience of reference only and shall not be considered on any interpretation of this Agreement.

13.10 Severability. If any provision of this Agreement or application thereof to any person or situation shall, to any extent, be held invalid or unenforceable, the remainder of this Agreement, and the application of such provisions to persons or situations other than those as to which it shall have been held invalid or unenforceable shall not be affected thereby, and shall continue in full force and effect, and be enforced to the fullest extent permitted by law.

13.11 Governing Law. This Agreement shall be governed by the laws of the State of Florida with venue lying in Miami-Dade County, Florida.

13.12 Disputes. Any claim, objection, or dispute arising out of the terms of this Agreement shall be litigated in the Eleventh Judicial Circuit Court in and for Miami-Dade County.

13.13 Attorney's Fees. To the extent authorized by law, in the event that either party brings suit for enforcement of this Agreement, the prevailing party shall be entitled to attorney's fees and court costs in addition to any other remedy afforded by law.

13.14 Extent of Agreement. This Agreement together with Contract Documents, attached as an Exhibit hereto, as amended herein above represents the entire and integrated agreement between the CITY and the CONTRACTOR and supersedes all prior negotiations, representations or agreements, either written or oral.

13.15 Waiver. Failure of the CITY to insist upon strict performance of any provision or condition of this Agreement, or to execute any right therein contained, shall not be construed as a waiver or relinquishment for the future of any such provision, condition, or right, but the same shall remain in full force and effect.

13.16 E-Verify. In accordance with Florida Statutes §448.095, the Contractor, prior to commencement of services or payment by the City, will provide to the City proof of participation/enrollment in the E-Verify system of the Department of Homeland Security. Evidence of participation/enrollment will be a printout of the Company's "Company Profile" page from the E-verify system. Failure to be continually enrolled and participating in the E-Verify program will be a breach of contract which will be grounds for immediate termination of the contract by the City. The Contractor will not hire any employee who has not been vetted through E-Verify. The Contractor may not subcontract any work for the City to any subcontractor that has not provided an affidavit stating that the subcontractor does not employ, contract with or subcontract with an unauthorized alien.

13.17 Scrutinized Companies. Contractor hereby certifies that it: a) has not been placed on the Scrutinized Companies that Boycott Israel List, nor is engaged in a boycott of Israel; b) has not been placed on the Scrutinized Companies with Activities in Sudan List nor the Scrutinized Companies with Activities in the Iran Petroleum Energy Sector List; and c) has not been engaged in business operations in Cuba or Syria. If City determined that Contractor has falsely certified facts under this paragraph or if Contractor is found to have been placed on the Scrutinized Companies Lists or is engaged in a boycott of Israel after the execution of this Agreement, City will have all rights and remedies to terminate this Agreement consistent with Section 287.135, Florida Statutes, as amended. The City reserves all rights to waive the certifications required by this paragraph on a case-by-case exception basis pursuant to Section 287.135, Florida Statutes, as amended. City reserves all rights to waive the certifications required by this paragraph on a case-by-case exception basis pursuant to Section 287.135, Florida Statutes, as amended.

Contractor shall not enter into a contract with an entity which would give access to an individual's personal identifying information if: (1) the entity is owned by the government of a foreign country of concern; (2) the government of a foreign country of concern has a controlling interest in the entity; or (3) the entity is organized under the laws or has its principal place of business in a foreign country of concern Section 287.138(2) (a)-(c), Fla. Stat. (2023), under Chapter 2023-33, Laws of Florida.

IN WITNESS OF THE FOREGOING, the parties have set their hands and seals the day and year first written above.

City of Opa-Locka

ATTEST:

_____ BY: _____

Joanna Flores
City Clerk

Darvin Williams
Interim City Manager

APPROVED AS TO FORM
AND LEGAL SUFFICIENCY:

_____

Burnadette Norris-Weeks, City Attorney

CONTRACTOR

WITNESSES:

_____

BY:_____
Ritu Vig, President
SP Plus Corporation d/b/a SP+
Consulting Services, a Florida For
Profit Corporation

_____

ATTEST:

_____
SECRETARY

STATE OF FLORIDA)
) SS:
COUNTY OF MIAMI-DADE)

BEFORE ME, an officer duly authorized by law to administer oaths and take acknowledgments, personally appeared _____ as _____, of a Florida corporation, and acknowledged executed the foregoing Agreement as the proper official of_____, for the use and purposes mentioned in it and affixed the official seal of the corporation, and that the instrument is the act and deed of that corporation.

IN WITNESS OF THE FOREGOING, I have set my hand and official seal at in the State and County aforesaid on this_____day of_____, 2023.

_____
NOTARY PUBLIC

My Commission Expires:

Sponsored by: Interim City Manager

RESOLUTION NO. XX-XXXX

A RESOLUTION OF THE CITY COMMISSION OF THE CITY OF OPA-LOCKA, FLORIDA, AUTHORIZING THE INTERIM CITY MANAGER TO ENTER INTO AND EXECUTE A VOLUNTARY COOPERATION AND OPERATIONAL ASSISTANCE MUTUAL AID AGREEMENT BETWEEN THE CITY OF OPA-LOCKA, FLORIDA AND THE MIAMI-DADE COUNTY SCHOOLS POLICE DEPARTMENT, ATTACHED HERETO AS EXHIBIT "A", FOR LAW ENFORCEMENT SERVICES AND RESOURCES; PROVIDING FOR INCORPORATION OF RECITALS; PROVIDING FOR AN EFFECTIVE DATE.

WHEREAS, the City of Opa-Locka, Florida ("City"), and the Miami-Dade County Schools Police Department, are authorized to enter into a Mutual Aid Agreement ("MAA") pursuant to Section 23.12, Florida Statutes, Florida Mutual Aid Act; and

WHEREAS, the Mutual Aid Agreement with the Miami-Dade County Schools Police Department provides for requesting and rendering of mutual aid in the form of law enforcement services to adequately respond to continuing multi-jurisdictional law enforcement problems, so as to protect the public peace and safety, and preserve the lives and property of the people; and

WHEREAS, the City Commission of the City of Opa-Locka desires to authorize the Interim City Manager to enter into and execute a Mutual Aid Agreement with the Miami-Dade County Schools Police Department, attached hereto as Exhibit "A".

NOW THEREFORE, BE IT RESOLVED BY THE CITY COMMISSION OF THE CITY OF OPA LOCKA, FLORIDA:

Section 1. RECITALS ADOPTED.

The recitals to the preamble herein are incorporated by reference.

Section 2. AUTHORIZATION

The City Commission of the City of Opa-Locka hereby authorizes and directs the Interim City Manager to enter into and execute an operational assistance Mutual Aid Agreement ("MAA") with the Miami-Dade County Schools Police Department, for law enforcement services and resources, attached hereto as Exhibit "A".

SECTION 3. SCRIVENER'S ERRORS.
Sections of this Resolution may be renumbered or re-lettered and corrections of typographical errors which do not affect the intent may be authorized by the Interim City Manager, following review by the City Attorney and without need of public hearing, by filing a corrected copy of same with the City.

Section 4. EFFECTIVE DATE.
This Resolution shall take effect immediately upon adoption and is subject to the approval of the Governor or his designee.

PASSED and **ADOPTED** this _____ day of _____, 2023.

_____
John Taylor, Mayor

ATTEST:

_____
Joanna Flores, City Clerk

APPROVED AS TO FORM
AND LEGAL SUFFICIENCY:

_____
Burnadette Norris-Weeks, P.A.

Moved by: _____

Seconded by: _____

VOTE:

Commissioner Bass	_____
Commissioner Kelley	_____
Commissioner Williams	_____
Vice Mayor Ervin	_____
Mayor Taylor	_____

DocuSign Envelope ID: 8CDFE240-5B47-47FB-8457-E8E225244B8D

City of Opa-locka
Agenda Cover Memo

Department Director:	Interim Chief Kenneth D. Ottley			**Department Director Signature:**			
City Manager:	Darvin Williams			**CM Signature:**	DocuSigned by: Darvin Williams C48C07C1E8DE492...		
Commission Meeting Date:	*10-25-2023*		**Item Type:** *(Enter X in box)*	**Resolution**	**Ordinance**		**Other**
				X			
Fiscal Impact: *(Enter X in box)*	**Yes**	**No**	**Ordinance Reading:** *(Enter X in box)*		**1st Reading**		**2nd Reading**
			Public Hearing: *(Enter X in box)*		**Yes**	**No**	**Yes** / **No**
	X					X	X
Funding Source: *Account#:* **65/521547**	*(Enter Fund & Dept)* Ex: None		**Advertising Requirement:** *(Enter X in box)*		**Yes**		**No**
							X
Contract/P.O. Required: *(Enter X in box)*	**Yes**	**No**	**RFP/RFQ/Bid#:**				
	X						
Strategic Plan Related *(Enter X in box)*	**Yes**	**No**	**Strategic Plan Priority Area:**		**Strategic Plan Obj./Strategy:** *(list the specific objective/strategy this item will address)*		
	X		**Enhance Organizational** ☐ **Bus. & Economic Dev** ☐ **Public Safety** ■ **Quality of Education** ☐ **Qual. of Life & City Image** ☐ **Communication** ☐		To enhance public safety.		
Sponsor Name	City Manager		**Department: Police Department**		City Manager		

Short Title:

A RESOLUTION OF THE CITY COMMISSION OF THE CITY OF OPA-LOCKA, FLORIDA, AUTHORIZING THE INTERIM CITY MANAGER TO ENTER INTO AN AGREEEMENT WITH THE MIAMI-DADE SCHOOLS POLICE DEPARTMENT, MIAMI FLORIDA FOR THE VOLUNTARY COOPERATION AND OPERATIONAL ASSISTANCE MUTUAL AID AGREEMENT; PROVIDING FOR INCORPORATION OF RECITALS; PROVIDING FOR AN EFFECTIVE DATE.

Staff Summary:

This is a Mutual Aid Agreement between the City of Opa-locka and the Maimi-Dade Schools Police Department to receive and extend mutual aid in the form of law enforcement services to adequately respond to continuing multi-jurisdictional law enforcement problems, so as to protect the public peace and safety, and preserve the lives and property of the people.

Financial Impact: There is no financial impact associated with this item.

Proposed Action:

Staff recommends the Commission approve this resolution and authorize the Interim City Manager to sign the Mutual Aid Agreement with the Miami-Dade Schools Police.

Attachment:

1. Miami-Dade Schools Police Department, Miami, Florida Mutual Aid Agreement.

Sponsored by: City Clerk

RESOLUTION NO. 23-XXXX

A RESOLUTION OF THE CITY COMMISSION OF THE CITY OF OPA-LOCKA, FLORIDA, AMENDING AND RATIFYING ADVERTISEMENT DATES FOR THE PREVIOUSLY AUTHORIZED PROCUREMENT PROCESS RELATED TO RESOLUTION 23-150 FOR AN OUTSIDE ENTITY FIRM OR PROFESSIONAL TO SERVE AS THE HUMAN RESOURCES DIRECTOR FOR THE CITY OF OPA-LOCKA; PROVIDING FOR INCORPORATION OF RECITALS; PROVIDING FOR CONFLICT; PROVIDING FOR AN EFFECTIVE DATE

WHEREAS, due to the departure of the City's Human Resources Director, it has become necessary for the City Commission to secure a Human Resources Director to provide Human Resources responsibilities to the City of Opa-Locka; and

WHEREAS, at the October 11, 2023 Regular City Commission meeting, the City Commission of the City of Opa-Locka voted to release a Request for Qualifications ("RFQ") authorizing a procurement process for an outside entity firm or professional to serve as the Human Resources Director with a procurement release date, a meeting for short-listed candidates and a selection to take place no later than the end of the Regular City Commission meeting on October 25, 2023; and

WHEREAS, on October 18, 2023, Resolution 23-150 on was approved by the State of Florida, however, there was not enough time to issue the RFQ and make a final decision of a Human Resources Director prior to the October 25, 2023 City Commission meeting; and

WHEREAS, it was necessary for the Office of the City Clerk to secure new dates to include: a) a release date of October 20, 2023; b) a due date of November 7, 2023; and c) an evaluation and selection date of November 8, 2023; and

WHEREAS, the City Commission of the City of Opa-Locka, Florida finds that amending and ratifying advertisement dates for the previously authorized procurement process related to Resolution 23-150 is in the best interests of the City of Opa-Locka, Florida.

NOW THEREFORE, BE IT RESOLVED BY THE CITY COMMISSION OF THE CITY OF OPA-LOCKA, FLORIDA:

SECTION 1. RECITALS ADOPTED.

The recitals to the preamble herein are incorporated by reference.

SECTION 2. AUTHORIZATION

The City Commission of the City of Opa-Locka, Florida hereby authorizes the amendment of the procurement process for a Request for Qualifications ("RFQ") for an outside entity firm or professional to serve as the Human Resources Director related to Resolution 23-150 and hereby ratifies the re-advertisement of new dates to include, but not limited to: a) a release date of October 20, 2023; b) a due date of November 7, 2023; and c) an evaluation and selection date of November 8, 2023.

SECTION 3. SCRIVENER'S ERRORS.

Sections of this Resolution may be renumbered or re-lettered and corrections of typographical errors, which do not affect the intent of this Resolution may be authorized by the City Attorney without need of public hearing, by filing a corrected copy of same with the City Clerk.

SECTION 4. CONFLICT

To the extent that there is conflict with this Resolution and any prior Resolution or policy of the City, this Resolution shall control.

SECTION 5. EFFECTIVE DATE

This Resolution shall take effect upon adoption and shall be provided to the Governor or Governor's Designee for review.

PASSED and **ADOPTED** this _____ day of _____, 2023.

_____
John Taylor, Mayor

ATTEST:

_____
Joanna Flores, City Clerk

Resolution No. XX-XXXX

APPROVED AS TO FORM AND
LEGAL SUFFICIENCY:

_____
Burnadette Norris-Weeks, P.A.
City Attorney

Moved by: _____

Seconded by: _____

VOTE:

Commissioner Bass	_____ (Yes)	_____ (No)
Commissioner Kelley	_____ (Yes)	_____ (No)
Commissioner Williams	_____ (Yes)	_____ (No)
Vice Mayor Ervin	_____ (Yes)	_____ (No)
Mayor Taylor	_____ (Yes)	_____ (No)

Sponsored by: City Commission

RESOLUTION NO. 23-150

A RESOLUTION OF THE CITY COMMISSION OF THE CITY OF OPA-LOCKA, FLORIDA, AUTHORIZING A PROCUREMENT PROCESS FOR AN OUTSIDE ENTITY FIRM OR PROFESSIONAL TO SERVE AS THE HUMAN RESOURCES DIRECTOR FOR THE CITY OF OPA-LOCKA; PROVIDING FOR INCORPORATION OF RECITALS; PROVIDING FOR CONFLICT; PROVIDING FOR AN EFFECTIVE DATE

WHEREAS, due to the recent departure of the City's Human Resources Director, it has become necessary for the City Commission to secure a Human Resources Director to provide Human Resources responsibilities; and

WHEREAS, the City Commission desires that a Request for Qualifications ("RFQ") be released substantially in the form attached hereto as Exhibit "A"; and

WHEREAS, Specifically, the City of Opa-Locka desires to authorize a procurement process for an outside entity firm or professional to serve as the Human Resources Director with a procurement release date of October ____, 2023; a close date for the procurement of October ____, 2023; a workshop meeting for the City Commission to sit as the short list committee for discussion of the procurement on October 25, 2023; and a Regular City Commission meeting selection where the City Manager will select a firm or professional from at least, two (2) short listed firms and/or professionals capable of serving as the City's human resources director, no later than the end of the Regular Commission meeting of October 25, 2023; and

WHEREAS, the City Commission had previously planned to secure a Human Resources Professional no later than October 11, 2023, however, legal counsel for the Inspector General's Office notified the City Attorney on September 22, 2023 that the Inspector General's Office desired justification on the legal sufficiency of Resolution 23-141; and

WHEREAS, on September 22, 2023, a comprehensive memorandum was prepared by the Opa-Locka City Attorney and was directed to Melinda Miguel, Chief Inspector General, providing complete legal justification supporting the passage of Resolution 23-141 by the City Commission; and

WHEREAS, at its September 27, 2023 regular City Commission meeting, the City Commission discussed that although it had passed Resolution 23-141, and the City had responded through its legal counsel with justification, the Office of Inspector General

still had not approved Resolution 23-141 and it appeared that the timelines set forth in said Resolution would not be met. The City Attorney was directed to communicate with the attorney for the State Office of the Inspector General; and

WHEREAS, on September 28, 2023, a lengthy telephone conference was held between the City Attorney and an attorney for the State Office of the Inspector General (State) regarding Resolution 23-141. In short, the State advised that while the legal analysis contained within the City's justification memorandum was not being challenged by the State, the Inspector General's office believed that it would be "best practices" for the selection to be short-listed by the City Commission but selected by the Interim City Manager. Further, the state believed that the City Manager should maintain in control of the Human Resources Director with the authority to hire and fire that function; and

WHEREAS, the City Commission of the City of Opa-Locka, Florida finds that authorization of a procurement process is in the best interest of the City of Opa-Locka and its residents and desires to accept the recommendation from the State Office of Inspector General on revisions to the procurement for a Human Resources professional consistent with Exhibit "A" hereto.

NOW THEREFORE, BE IT RESOLVED BY THE CITY COMMISSION OF THE CITY OF OPA-LOCKA, FLORIDA:

SECTION 1. RECITALS ADOPTED.

The recitals to the preamble herein are incorporated by reference.

SECTION 2. AUTHORIZATION

The City Commission of the City of Opa-Locka, Florida hereby authorizes the City of Opa-Locka to implement a procurement process for an outside entity firm or professional to serve as the Human Resources Director consistent with the RFQ, attached hereto as Exhibit "A." At the earliest possible time following approval by the State of Florida of this resolution, the procurement should be promptly released to the public and published as described and modified to include dates for Exhibit "A."

SECTION 3. SCRIVENER'S ERRORS.

Sections of this Resolution may be renumbered or re-lettered and corrections of typographical errors, which do not affect the intent of this Resolution may be authorized by the City Attorney without need of public hearing, by filing a corrected copy of same with the City Clerk.

SECTION 4. CONFLICT

To the extent that there is conflict with this Resolution and any prior Resolution or policy of the City, this Resolution shall control.

SECTION 5. EFFECTIVE DATE

This Resolution shall take effect upon adoption and shall be provided to the Governor or Governor's Designee for review.

PASSED and **ADOPTED** this 11th day of October, 2023.

John H. Taylor Jr., Mayor

ATTEST:

Joanna Flores, City Clerk

APPROVED AS TO FORM AND LEGAL SUFFICIENCY:

Burnadette Norris-Weeks, P.A.
City Attorney

Moved by: Commissioner Kelley

Seconded by: Commissioner Williams

VOTE:	4-0
Commissioner Bass	ABSENT
Commissioner Kelley	YES
Commissioner Williams	YES
Vice Mayor Ervin	YES
Mayor Taylor	YES

City of Opa-locka

RFQ NO: 23 - TBA

REQUEST FOR QUALIFICATIONS (RFQ)

OUTSIDE ENTITY HUMAN RESOURCES DIRECTOR

CITY OF OPA-LOCKA
RFQ NO. 23-TBA
OUTSIDE ENTITY HUMAN RESOURCES DIRECTOR

TABLE OF CONTENTS

Subject	Page Number
Cover	1
Table of Contents	2
Advertisement	3
Part I - Proposal Guidelines	4
Part II - Nature of Services Required	9
Part III - Proposal Requirements	11
Part IV - Evaluation of Proposals	13
Proposer Qualifications	15
Debarment, Suspension Certification	16
Drug-Free Certification	18
Non-Collusion Affidavit	19
Non-Discrimination Affidavit	20
E-Verify Form	22

CITY OF OPA-LOCKA REQUEST FOR QUALIFICATIONS
RFQ NO: 23-TBA
OUTSIDE ENTITY HUMAN RESOURCES DIRECTOR

The sealed proposal for OUTSIDE ENTITY HUMAN RESOURCES DIRECTOR at the Municipal Complex for the City of Opa-Locka will be received by the City's Clerk Office, 780 Fisherman St, 4th Floor, Opa-locka, Florida 33054, October ___, 2023 by 2:00 pm. Any RFQ Package received after the designated closing time will be returned unopened. The City will accept proposals by mail; however, the contractor must submit the proposal by the due date. In addition, the proposal shall be via www.demandstar.com (e-bid) by 2:00 pm.

The address to submit sealed proposal is listed below:

CITY OF OPA-LOCKA
Office of the City Clerk
780 Fisherman Street, 4th Floor
Opa-locka, Florida 33054

An original and six (6) copies for a total of seven (7) plus 1 copy of the Proposal package on USB Flash Drive in PDF format shall be submitted in sealed envelopes/packages addressed to the City Clerk, City of Opa-locka, Florida, and marked RFQ for OUTSIDE ENTITY HUMAN RESOURCES DIRECTOR.

Proposers desiring information for use in preparing proposals may obtain a set of such documents by visiting the City's website at www.opalockafl.gov or www.demandstar.com.

The City reserves the right to accept or reject any and all proposals and to waive any technicalities or irregularities therein. The City further reserves the right to award the contract to that proposer whose proposal best complies with the RFQ NO: 23-TBA requirements. Proposers may not withdraw their proposal for a period of ninety (90) days from the date set for the opening thereof.

Joanna Flores, CMC
City Clerk

CITY OF OPA-LOCKA REQUEST FOR QUALIFICATIONS
RFQ NO: 23-TBA
OUTSIDE ENTITY HUMAN RESOURCES DIRECTOR

PART I

PROPOSAL GUIDELINES

1-1. Introduction: The City of Opa-locka seeks proposals for a OUTSIDE ENTITY HUMAN RESOURCES DIRECTOR. The City is soliciting bids on behalf of the City Manager's Office for Outside Entity Human Resources Director under the laws of the State of Florida. These services must be efficient and economical, adhere to industry standards and best practices, and utilize the latest nonproprietary technology. The Contract will be awarded to the most qualified Proposer, as described in the Evaluation Procedures Section below.

1-2. Proposal Submission and Withdrawal: The City of Opa-locka will be accepting proposals by mail, however it is Proposer's responsibility to submit Proposer's proposal by the due date. In addition, proposals may be submitted via www.demandstar.com (e-bid). The City must receive all proposals by 2:00 p.m. on October , 2023. The address to submit sealed proposals is listed below:

CITY OF OPA-LOCKA
Office of the City Clerk
780 Fisherman Street, 4th Floor
Opa-locka, Florida 33054

To facilitate processing, please clearly mark the outside of the proposal package as follows: RFQ NO. 23-TBA – OUTSIDE ENTITY HUMAN RESOURCES DIRECTOR.

This package shall also include the Proposer's return address. Proposers may withdraw their proposals by notifying the City in writing at any time prior to the deadline for proposal submittal. After the deadline, the proposal will constitute an irrevocable offer, for a period of 90 days. Once opened, proposals become a record of the City and will not be returned to the Proposer.

The City cautions Proposers to assure actual delivery of mailed or hand-delivered proposals directly to the City Clerk's Office at 780 Fisherman Street, 4th Floor, Opa-locka, Florida 33054 prior to the deadline set for receiving proposals. Telephone confirmation of timely receipt of the proposal may be made by calling (305) 688-4611 before proposal closing time. Any proposal received after the established deadline will not be considered and will be returned unopened to the Proposer(s).

1-3. Number of Copies: Proposers shall submit an original and six (6) copies (a total of 7) plus one copy on USB flash drive in PDF format of the proposal in a sealed, opaque package marked as noted above. The Proposer will be responsible for timely delivery, whether by personal delivery, US Mail or any other delivery medium.

1-4. Development Costs: Neither the City nor its representatives shall be liable for any expenses incurred in connection with preparation of a response to this Request for Proposal. Proposers should prepare their proposals simply and economically, providing a straightforward and concise description of the Proposer's ability to meet the requirements of the RFQ.

1-5. Inquiries: The City Clerk will receive written requests for clarification concerning the meaning or interpretations of the RFQ, up until one (1) day prior to the submittal date. City personnel are authorized only to direct the attention of prospective Proposers to various portions of the RFQ so that they may read and interpret such for themselves. No employee of the City is authorized to interpret any portion of this RFQ or give information as to the requirements of the RFQ in addition to what is contained in the written RFQ document or Resolution 23-____, authorizing the RFQ.

1-6. Addendum: The City may record its response to inquiries and any supplemental instructions in the form of written addenda. The City may email or post written addenda up to two (2) calendar days before the date fixed for receiving the proposals. Proposers shall contact the City to ascertain whether any addenda have been issued. Failure to do so could result in an unresponsive proposal. Any oral explanation given before the RFQ opening will not be binding.

All Proposers are expected to carefully examine the proposal documents. Any ambiguities or inconsistencies should be brought to the attention of the City Clerk through written communication prior to the opening of the proposals, which should be forwarded by the City Clerk to the City Attorney.

1-7. Contract Awards: The City anticipates entering into an Agreement with the Proposer who submits the proposal judged by the City to be most advantageous.

The Proposer understands that this RFQ does not constitute an offer or an Agreement with the Proposer. An offer or Agreement shall not be deemed to exist and is not binding until proposals are reviewed and accepted for final approval of a contract form.

The City reserves the right to reject all proposals, to abandon the project and/or to solicit and re-advertise for other proposals.

1-8. Contractual Agreement: This RFQ and Consultant/Contractor proposal shall be included and incorporated in the final award. The successful proposer and the City will then enter into an Agreement in a form acceptable to the City Attorney. The order of contractual precedence will be the Contract or Agreement document, original Terms and Conditions, and Proposer response. Any and all legal action necessary to enforce the award will be held in Miami-Dade County and the contractual obligations will be interpreted according to the laws of Florida. Any additional language for consideration by the Proposer must be attached and enclosed as part of the proposal.

1-9. Selection Process: The proposals will be evaluated by the City Commission and short listed consistent with qualifications deemed responsive.

The City reserves the right to negotiate price.

1-10. Public Records: Upon award recommendation or ten (10) days after opening, whichever occurs first, proposals become "public records" and shall be subject to public disclosure consistent with Chapter 119 Florida Statutes. Proposers must invoke the exemptions to disclosure provided by law in the response to the RFQ, and must identify the data or other materials to be protected, and must state the reasons why such exclusion from public disclosure is necessary. Document files may be examined, during normal working hours.

1-11. News Releases: The Proposer shall obtain the prior approval of the City Manager's Office for all news releases or other publicity pertaining to this RFQ or the service, study or project to which it relates.

1-12. Insurance: The awarded Proposer(s) shall maintain insurance coverage reflecting at least the minimum amounts and conditions specified herein. In the event the Proposer is a governmental entity or a self-insured organization, different insurance requirements may apply. Misrepresentation of any material fact, whether intentional or not, regarding the Proposers' insurance coverage, policies or capabilities may be grounds for rejection of the proposal and rescission of any ensuing Agreement.

1. Evidence of General Liability coverage with limits not less than $1,000,000 per Occurrence (Including Policy Number and Policy Period);

2. Evidence of Auto Liability coverage with limits not less than $300,000 per Occurrence (Including Policy Number and Policy Period);

3. Evidence of Workers' Compensation coverage with statutory limits and Employer's Liability coverage with limits not less than $100,000 (Including Policy Number and Policy Period), if applicable;

4. The City listed as an additional insured (this may be specifically limited to the specific job(s) the contractor will be performing);

5. Minimum 30-day written notice of cancellation.

1-13. Licenses: Proposers, both corporate and individual, must be fully licensed and certified in the State of Florida at the time of RFQ submittal to the extent applicable.

1-14. Public Entity Crimes: Award will not be made to any person or affiliate identified on the Department of Management Services' "Convicted Vendor List". This list is defined as consisting of persons and affiliates who are disqualified from public contracting and purchasing processes because they have been found guilty of a public entity crime. No public entity shall award any contract to, or transact any business in excess of the threshold amount provided in Section 287.17 Florida Statutes for Category Two (currently $25,000) with any person or affiliated on the "Convicted Vendor List" for a period of thirty-six (36) months from the date that person or affiliate was placed on the "Convicted Vendor List" unless that person or affiliate has been removed from the list. By signing and submitting the RFQ proposal forms, Proposer attests that they have not been placed on the "Convicted Vendor List".

1-15. Code Of Ethics: If any Proposer violates or is a party to a violation of the code of ethics of the City of Opa-locka, Miami-Dade County or the State of Florida with respect to this proposal, such Proposer may be disqualified from performing the work described in this proposal or from furnishing the goods or services for which the proposal is submitted and shall be further disqualified from submitting any future proposals for work, goods or services for the City of Opa-locka. Further, the proposer shall not have any prior personal or business relationship with the City's Interim City Manager or City Manager and shall not have previously provided services or advice to the City of Opa-Locka at any time in the past ten (10) years. Rather, the proposer shall be an independent individual or firm free from influence through it's officers and employees.

1-16. Drug-Free Workplace: Preference shall be given to businesses with Drug-Free Workplace (DFW) programs. Whenever two or more proposals which are equal with respect to price, quality, and service are received by the City for the procurement of commodities or contractual services, a proposal received from a business that completes the attached DFW form certifying that it is a DFW shall be given preference in the award process.

1-17. Permits and Taxes: The Proposer shall procure all permits, pay all charges, fees, and taxes, and give all notices necessary and incidental to the due and lawful execution of the work where applicable.

1-18. Protests: Protests of the plans, specifications, and other requirements of the request for proposal and bids must be received in writing by the City Clerk's Office prior to the scheduled bid opening.

1-19. Termination for Convenience: A contract may be terminated in whole or in part by the City at any time and for any reason in accordance with this clause whenever the City Commission shall determine that such termination is in the best interest of the City.

CALENDAR EVENTS

EVENT	DATE/LOCATION	
Release Date	October __, 2023	
Pre-Bid Meeting	N/A	
Written Questions Due	October ___, 2023 @ 10:00 AM Email questions to the City Clerk: _____ With Subject line "RFQ No: Bid Questions"	
Response to Questions	October __ @ 10:00 AM	
Due Date/Bid Opening	October ___ @ 2:00 pm	at: City of Opa-locka Clerk Office 780 Fisherman Street, 4th Floor Opa-locka, Florida 33054 OR Electronic Bid on www.Demandstar.com
EVALUATION: Evaluation Committee Meeting (Open to the Public).	October ___, 2023 @ 6 PM	
Award	October ____, 2023 @ 7PM Regular Meeting	

PART II
NATURE OF SERVICES REQUIRED

2-1 PURPOSE AND SCOPE OF WORK

Purpose

The City of Opa-locka is seeking the professional services of a firm knowledgeable in Human Resources (HR) practices to serve and the City's Human Resources Director and specifically serve in the role of the City's Human Resources Department consistent with the City's Ordinances. The scope of work may include, but is not limited to recruitment, hiring practices, working along with the City Manager, City Attorney and city staff to ensure legal compliance, creation or revisions of policies and procedures necessary for a functioning Human Resources Department. The Human Resources Director shall report to the City Manager as a best practice for this function. The City is not responsible for any costs incurred by the respondent in proposal preparation, presentations, site visits, or benchmarks performed.

Scope of Work

The selected individual or firm shall be expected to perform the services required under this Request for Qualifications in the most expeditious manner possible. The scope should include the following, but is not limited to:

1. Conducting and overseeing a City Manager Search consistent with the City's Code of Ordinances and existing procedures for the selection of a City Manager. With respect to the search of the City Manager, the Human Resources Director shall not communicate with the Interim City Manager or share any information that is not shared with any other candidate seeking the position of the permanent City Manager. Further, the Human Resources Director shall not share information or operate in any way that would serve to give the Interim City Manager an advantage or control of the City Manager selection process. To the extent that the Human Resources Director feels compromised in any way by the Interim City Manager, this information shall be immediately reported, by email, to the City Commission with a copy of the email provided to the City Clerk and the City Attorney.

2. Professional Human Resources Duties: The firm would serve as the Human Resources Director and perform all professional human resources duties as required by City Ordinances. The firm would advise and report to management on HR best practices and compliance with employment laws and policy. The firm would also be available to assist with employee relations and disputes.

    - The firm will meet with key representatives (City Manager, Assistant City Managers, and Directors as needed) to discuss the needs of the City. The firm will also meet with the City Attorney when necessary to secure information needed for the City Attorney's work.

3. Creating, Updating, and Implementing HR/Employment Policies: The firm would work with management on creating, updating, and implementing HR/Employment policies and procedures. The firm would assist the city in updates to the employee manual on an as-needed basis.

4. Job Descriptions: The firm would work with management to revise and create new job descriptions when necessary.

5. Recruitment: Recruitment services of various positions to be filled as needed. The HR professional or firm would work with the City during relevant recruitment periods.

    - Meet with key decision makers to develop ideal candidate profiles.
    - Write or adapt job description and determine or confirm salary range for management review and board approval, if appropriate.
    - Develop and implement recruitment and advertising strategy.
    - Develop (or modify existing) job flyer.
    - Assist with advertisement in appropriate locations, including social media and specialized job boards.
    - Review application packets and assess candidates with management.
    - Manage the interview process, including developing questions and scoring mechanisms.
    - Where necessary, conduct skills testing.
    - Work with law enforcement to obtain any necessary credentials needed for background checks where appropriate.
    - Check references and conduct background checks.
    - Other recruitment tasks as necessary.
    - Other relevant tasks as required for the smooth operation of the Human Resources Department.

6. Agreement with City: It is the intent of this solicitation that the HR Director work with and report to the City Manager on all issues unrelated to the permanent City Manager selection process. The City Manager will make the final decision on the hiring of the HR position, following a shortlisting of no less than two (2) candidates by the City Commission. The successful HR Director candidate will be required to enter into an agreement with the City that may be terminated by the City Manager if there is a breach of the Agreement terms.

7. Other HR Functions and Support As Needed: Other HR functions and support that are needed include, but not limited to, Compensation Study and Assistance with Benchmark Classifications, investigations of complaints by employees, reviewing of counseling or other disciplinary actions, memos, etc., training or coaching of staff in HR areas as needed, policy or procedure writing, update and/or review, and special projects.

8. Legal Compliance: Ensure compliance with federal, state, and local laws and regulations related to employment and internal policies and procedures. Be knowledgeable about HR laws and regulations pertinent to public agencies under the general law. Provide suggestions and recommendations regarding areas that need to be addressed for legal compliance.

9. Deliverables: The City expects the consultant to be onsite at least one (1) day per week for no less than six (6) hours day and be available through telephone, remote video conference, or email as needed throughout the week. Note: The City prefers having set hours of availability for at least two days a week and expects the consultant to respond to email within a 24 hour period.

2-2 PROPOSER QUALIFICATIONS

Adequate information and documentation must be provided in the Proposal to support or confirm satisfaction of the required qualifications below:

- The Proposer shall have extensive experience, expertise, and reliability as a Human Resources Professional with an established good reputation, particularly with governmental clients or large corporate entities. Proposer must have a minimum of five (5) years of consecutive and successful experience in the aforementioned areas.
- Proposer's track record in providing services to governmental agencies or large corporate entities. Please provide a list of current and relevant projects, including client names, titles, telephone numbers and email address. Please ensure that contact information is current.
- Demonstrate an overall combination of skills, prior work experience, business reputation, and commitment to diversity.

2-3 TERM OF CONTRACT

The contract period for the winning bidder of this RFQ is anticipated to be one (1) fiscal year with two one (1) year options for renewal.

An Agreement may be for a lesser period of time.

PART III

PROPOSAL REQUIREMENTS

3-1 RULES FOR PROPOSALS

In order to maintain comparability and enhance the review process, proposals shall be organized in the manner specified below and include all information required herein. The proposal must name all persons or entities interested in the proposal as principals and the persons likely to perform work not in conflict with provisions of this RFQ. The proposal must declare that it is made without collusion with any other person or entity submitting a proposal pursuant to this RFQ. The proposal must be independent and not have had any contact with any City Staff members of the City regarding this proposal, unless specifically authorized herein.

3-2 SUBMISSION OF PROPOSALS

The proposal shall be submitted on 8 ½ "x 11" paper, portrait orientation, with headings and sections numbered appropriately. Ensure that all information is written legibly or typed. The following should be submitted for a proposing firm to be considered:

3.2.1 Cover Page - Show the name of Proposer's agency/firm, address, telephone number, name of contact person, date, and the proposal number and description.

3.2.2 Tab 1 - Table of Contents
Include a clear identification of the material by section and by page number.

3.2.3 Tab 2 - Letter of Transmittal

3.2.3.1 Limit to one or two pages.
3.2.3.2 Briefly state the Proposer's understanding of the work to be done and make a positive commitment to perform the work.
3.2.3.3 Give the names of the persons who will be authorized to make representations for the Proposer during the Agreement as the City contact, their titles, addresses and telephone numbers.
3.2.3.4 Provide an official signature of a Corporate Officer certifying the contents of the Proposer's responses to the City's Request for Proposal.

3.2.4 Tab 3 - General Information

3.2.4.1 Name of Business.
3.2.4.2 Mailing Address and Telephone Number.
3.2.4.3 Names and contact information of persons to be contacted for information or services if different from name of person in charge.
3.2.4.4 Normal business hours.
3.2.4.5 State if business is local, national, or international and indicate the business legal status (corporation, partnership, etc.).
3.2.4.6 Give the date business was organized and/or incorporated, and where.
3.2.4.7 Give the location of the office from which the work is to be done and the number of professional staff employees at that office.
3.2.4.8 Indicate whether the business is a parent or subsidiary in a group of firms/agencies.

If it is, please state the name of the parent company.

3.2.4.9 State if the business is licensed, permitted and/or certified to do business in the State of Florida and attach copies of all such licenses issued to the business entity.

3.2.5 Tab 4 – Project Approach

Describe in detail the proposal to fulfill the requirements of the scope of services listed in section 2.2 of this RFQ.

3.2.6 Tab 5 – Experience and Qualifications

3.2.6.1 Specify the number of years the Proposer has been in business.

3.2.6.2 Identify the Proposer's qualifications to perform the services identified in this RFQ as listed in section 2-2 of the Scope of Services.

Include resumes, not exceeding one page each, of all key personnel who will be assigned to the City for this project.

3.2.7 Tab 6 – Schedule

3.2.7.1 Include a timetable that identifies the amount of time required to complete each component of the Program listed in this RFQ to the best of knowledge and understanding.

3.2.7.2 Indicate the earliest available start date for Proposer's project team.

3.2.7.3 Indicate the project completion date based on the date provided in 3.2.7.1.

3.2.8 Tab 7 – Pricing of Services

3.2.8.1 Projected Fee basis should be an all-inclusive, base fee.

3.2.9 Tab 8 – References

3.2.9.1 List a minimum of three (3) references in Florida for which the Proposer has provided services detailed on the solicitation. Include the name of the organization, brief description of the project, name of contact person telephone number and email address.

3.2.10 Tab 9 – Additional Forms

Proposers must complete and submit as part of its Proposal all of the following forms and/or documents.

- Proposer Qualifications
- Certification regarding debarment and suspension
- Drug Free workplace certification
- E-Verification

FAILURE TO SUBMIT ALL OF THE ABOVE REQUIRED DOCUMENTATION MAY DISQUALIFY PROPOSER.

PART IV
EVALUATION OF PROPOSALS

4-1 SELECTION COMMITTEE

A Selection Committee, consisting of the City Commission, will convene to short list no less than two candidates with the Interim City Manager or City Manager making the final decision. The Selection Committee shall also be known as the Shortlisting Committee. The Selection Committee will consider and shortlist based on qualifications. The Proposer shall satisfy and explicitly respond to all the requirements of the RFQ, including qualifications and a detailed explanation of how the services shall be performed.

Each proposal will be reviewed to determine if the Proposal is responsive to the submission requirements outlined in the Solicitation. A responsive Proposal is one which follows the requirements of this Solicitation that includes all documents submitted in the format outlined in this Solicitation, is of timely submission, and has the appropriate signatures as required on each document. Failure to comply with these requirements may result in the Proposal being deemed non-responsive. The Contract (s) will be awarded to the most responsive and responsible Proposer whose Proposal best serves the interest of the City.

4-2 EVALUATION CRITERIA

The Committee may choose to invite any and/or or all firms to make presentations and be interviewed by the Committee as part of the evaluation process for this Solicitation. The Committee's decision will be communicated to all Proposers.

4-3 ORAL PRESENTATIONS

Proposers may be required to make individual presentations to the City Selection Committee to clarify their proposals. However, the City Commission has the right to accept and shortlist the best proposal as submitted, without discussion or negotiation.

If the City Commission determines that such presentations are needed, a time and place will be scheduled for oral presentations. Candidates should be available for presentations at the City Commission meeting or workshop where the proposals will be reviewed and shortlisted. Each Proposer shall be prepared to discuss and substantiate any of the areas of the proposal submitted, and its qualifications to perform the specified services. During the oral presentations, the Proposers should relate their discussion to the evaluation criteria, which will include (but not be limited to) their approach to the project. The proposed Project Manager must be in attendance.

The Evaluation Criteria may be changed for the oral presentation evaluation phase. References and site visits (if completed) shall be included in the final evaluation criteria, along with other criteria and weights as determined by the Selection Committee shortlisting. Finalists will be informed as to the revised criteria, if any, prior to their oral presentation.

Additionally, prior to award of an Agreement pursuant to this RFQ, the City may require Proposers to submit such additional information bearing upon the Proposer's ability to perform the services in the Agreement as the City deems appropriate.

4-4 FINAL SELECTION

The Interim City Manager or City Manager of Opa-locka Commission will select the firm that meets the best interests of the City following shortlisting. The City shall be the sole judge of its own best interests, the proposals, and the resulting negotiated Agreement. The City's decisions will be final. Following the selection of firm, the expectation is that an Agreement will be executed between both parties. The City Manager will recommend award to the responsible Proposer whose Proposal is determined to provide overall best value to the City, considering the evaluation factors in this RFQ following shortlisting.

4-5 AWARD AND CONTRACT EXECUTION

After review by the Selection Committee of the proposals and oral presentations a recommendation the City Commission will shortlist no less than two (2) firms for selection by the Interim City Manager or City Manager. Upon selection, contract negotiations will be initiated with the successful firm through the City Attorney's Office. Upon successful contract negotiations with the prevailing firm, the remaining firms will be notified that the process has been completed and that they were not selected.

RFQ NO. 23-TBA
OUTSIDE ENTITY HUMAN RESOURCES DIRECTOR

The Proposer, as a result of this proposal, should hold a County and/or Municipal Contractor's Occupational License in the area of their fixed business location. Complete and submit with the proposal the following information:

1. Legal Name and Address:

   Name: _____

   Address: _____

   City, State, Zip:_____Phone/Fax: _____

2. Check One: Corporation ( ) Partnership ( ) Individual ( )

3. If Corporation, indicate:
   Date of Incorporation:_____State in which Incorporated: _____

4. If an out-of-state Corporation, currently authorized to do business in Florida, give date of such authorization:_____

5. Name and Title of Principal Officers Date Elected:

_____	_____
_____	_____
_____	_____
_____	_____

6. The length of time in business:_____years

7. The length of time (continuous) in business as a service organization in Florida:
   _____Years. Provide corporate forms from the Florida Division of Corporations of similar state entity.

8. Provide a list of at least three commercial, corporate or government references that the bidder has supplied service/commodities meeting the requirements of the City of Opa-locka RFQ during the last twenty-four months.

9.

10. A copy of County and/or Municipal Occupational License(s)

Note: *Information requested herein and submitted by the Proposers will be analyzed by the City of Opa-locka and will be a factor considered in awarding any resulting contract. The purpose is to insure that the Contractors, in the sole opinion of the City of Opa-locka, can sufficiently and efficiently perform all the required services in a timely and satisfactory manner as will be required by the subject contract. If there are any terms and/or conditions that are in conflict, the most stringent requirement shall apply.*

CITY OF OPA-LOCKA

CERTIFICATION REGARDING DEBARMENT, SUSPENSION PROPOSED DEBARMENT AND OTHER MATTERS OF RESPONSIBILITY

1. The Proposer certifies, to the best of its knowledge and belief, that the Proposer and/or any of its Principals:

A. Are not presently debarred, suspended, proposed for debarment, or declared ineligible for the award of contracts by any Federal agency.

B. Have not, within a three-year period preceding this offer, been convicted of or had a civil judgment rendered against them for: commission of fraud or a criminal offense in connection with obtaining, attempting to obtain, or performing a public (Federal, state, or local) contract or subcontract; violation of Federal or state antitrust statutes relating to the submission of offers; or commission of embezzlement, theft, forgery, bribery, falsification or destruction of records, making false statements, tax evasion, or receiving stolen property; and

C. Are not presently indicted for, or otherwise criminally or civilly charged by a governmental entity with, commission of any of the offenses enumerated in paragraph 1-B of this provision.

2. The Proposer has not, within a three-year period preceding this offer, had one or more contracts terminated for default by any City, State or Federal agency.

A. "Principals," for the purposes of this certification, means officers; directors; owners; partners; and persons having primary management or supervisory responsibilities within a business entity (e.g., general manager; plant manager; head of a subsidiary, division, or business segment, and similar positions). This Certification Concerns a Matter Within the Jurisdiction of an Agency of the United States and the Making of a False, Fictitious, or Fraudulent Certification May Render the Maker Subject to Prosecution Under Section 1001, Title 18, United States Code.

B. The Proposer shall provide immediate written notice to the Contracting Officer if, at any time prior to contract award, the Proposer learns that its certification was erroneous when submitted or has become erroneous by reason of changed circumstances.

C. A certification that any of the items in paragraph (a) of this provision exists will not necessarily result in withholding of an award under this solicitation. However, the certification will be considered in connection with a determination of the Proposer's responsibility. Failure of the Proposer to furnish a certification or provide such additional information as requested by the Contracting Officer may render the Proposer non-responsive.

D. Nothing contained in the foregoing shall be construed to require establishment of a system of records in order to render, in good faith, the certification required by paragraph (a) of this provision. The knowledge and information of a Proposer is not required to exceed that which is normally possessed by a prudent person in the ordinary course of business dealings.

E. The certification in paragraph (a) of this provision is a material representation of fact upon which reliance was placed when making award. If it is later determined that the Proposer knowingly rendered an erroneous certification, in addition to other remedies available to the Government, the Contracting Officer may terminate the contract resulting from this solicitation for default.

AS THE PERSON AUTHORIZED TO SIGN THE STATEMENT, I CERTIFY THAT THIS FIRM COMPLIES FULLY WITH THE ABOVE REQUIREMENTS.

Signature_____

Printed Name _____

CITY OF OPA-LOCKA
RFQ NO. 23-TBA

DRUG-FREE WORKPLACE CERTIFICATION FORM

Whenever two (2) or more bids/proposals, which are equal with respect to price, quality, and service, are received by the CITY OF OPA-LOCKA for the procurement of commodities or contractual services, a bid/proposal received from a business that certifies that it has implemented a drug-free workplace program shall be given preference in the award process. In order to have a drug-free workplace program, a business shall:

1. Publish a statement notifying employees that the unlawful manufacture, distribution, dispensing, possession or use of controlled substances is prohibited in the workplace and specifying the actions that will be taken against employees for violations of such prohibition.

2. Inform employees about the dangers of drug abuse in the workplace, the business's policy of maintaining a drug-free workplace, any available drug counseling, rehabilitation, and employee assistance programs, and the penalties that may be imposed upon employees for drug abuse violations.

3. Give each employee engaged in providing the commodities or contractual services that are under bid a copy of the statement specified in number (1).

4. In the statement specified in number (1), notify the employees that as a condition for working on the commodities or contractual services that are under bid, the employee will abide by the terms of the statement and will notify the employer of any conviction on or plea of guilty or no contest to any violation of Chapter 893, Florida Statutes or of any controlled substance law of the United States or any singular state, for a violation occurring in the workplace no later than five (5) days after such conviction.

5. Impose a sanction on, or require the satisfactory participation in a drug abuse assistance or rehabilitation program if such is available in the employee's community by any employee who is so convicted.

6. Make a good faith effort to continue to maintain a drug-free workplace through implementation of Section 287.087, Florida Statutes.

This Certification is submitted by_____the
(Name)
_____of_____
(Title/Position) (Company)

who does hereby certify that said Company has implemented a drug-free workplace program, which meets the requirements of Section 287.087, Florida Statutes, which are identified in numbers (1) through (6) above.

_____ _____
Date Signature

CITY OF OPA-LOCKA NON-COLLUSION AFFIDAVIT

STATE OF FLORIDA - COUNTY OF MIAMI DADE

_____ being first duly sworn, deposes and says that:

(1) He/She/They is/are the _____ (Owner, Partner, Officer, Representative or Agent) of _____ the PROPOSER that has submitted the attached proposal;

(2) He/She/They is/are fully informed respecting the preparation and contents of the attached Proposal and of all pertinent circumstances respecting such Proposal;

(3) Such Proposal is genuine and is not a collusive or sham Proposal;

(4) Neither the said PROPOSER nor any of its officers, partners, owners, agents, representatives, employees or parties in interest, including this affiant, have in any way colluded, conspired, connived or agreed, directly or indirectly, with any other PROPOSER, firm, or person to submit a collusive or sham Proposal in connection with the Work for which the attached Proposal has been submitted; or to refrain from Proposing in connection with such Work; or have in any manner, directly or indirectly, sought by agreement or collusion, or communication, or conference with any PROPOSER, firm, or person to fix any overhead, profit, or cost elements of the Proposal or of any other PROPOSER, or to fix any overhead, profit, or cost elements of the Proposed Price or the Proposed Price of any other PROPOSER, or to secure through any collusion, conspiracy, connivance, or unlawful agreement any advantage against (Recipient), or any person interested in the proposed Work;

(5) The price or prices quoted in the attached Proposal are fair and proper and are not tainted by any collusion, conspiracy, connivance, or unlawful agreement on the part of the PROPOSER or any other of its agents, representatives, owners, employees or parties of interest, including this affiant.

Signed, sealed and delivered in the presence of:

_____	By: _____
Witness	Signature
_____	_____
Witness	Print Name and Title

NON-DISCRIMINATION AFFIDAVIT

I, the undersigned, hereby duly sworn, depose and say that the organization, business or entity represented herein shall not discriminate against any person in its operations, activities or delivery of services under any agreement it enters into with the City of Opa-locka. The same shall affirmatively comply with all applicable provisions of federal, state and local equal employment laws and shall not engage in or commit any discriminatory practice against any person based on race, age, religion, color, gender, sexual orientation, national origin, marital status, physical or mental disability, political affiliation or any other factor which cannot be lawfully used as a basis for service delivery.

By:_____

Title:_____

Sworn and subscribed before this

____day of_____, 20____

_____
Notary Public, State of Florida

_____
(Printed Name)

My commission expires:_____

E-VERIFY

Effective January 1, 2021, public and private employers, contractors and subcontractors will be required to register with, and use of the E-Verify system in order to verify the work authorization status of all newly hired employees. Vendor/Consultant/Contractor acknowledges and agrees to utilize the U.S. Department of Homeland Security's E-Verify System to verify the employment eligibility of:

a) All persons employed by Vendor/Consultant/Contractor to perform employment duties within Florida during the term of the contract; and

b) All persons (including sub-vendors/sub-consultants/sub-contractors) assigned by Vendor /Consultant/ Contractor to perform work pursuant to the contract with the Department. The Vendor /Consultant/ Contractor acknowledges and agrees that use of the U.S. Department of Homeland Security's E-Verify System during the term of the contract is a condition of the contract with the City; and

By entering into a Contract, the Contractor becomes obligated to comply with the provisions of Section 448.095, Fla. Stat., "Employment Eligibility," as amended from time to time. This includes but is not limited to utilization of the E-Verify System to verify the work authorization status of all newly hired employees, and requiring all subcontractors to provide an affidavit attesting that the subcontractor does not employ, contract with, or subcontract with, an unauthorized alien. The contractor shall maintain a copy of such affidavit for the duration of the contract. Failure to comply will lead to termination of this Contract, or if a subcontractor knowingly violates the statute, the subcontract must be terminated immediately. If t contract is terminated for a violation of the statute by the Contractor, the Contractor may not be awarded a public contract for a period of 1 year after the date of termination. The Contractor acknowledges it is liable to the City for any additional costs as a result of termination of the contract due to Contractor's failure to comply with the provisions herein.

E-VERIFY FORM

Definitions:

"Contractor" means a person or entity that has entered or is attempting to enter into a contract with a public employer to provide labor, supplies, or services to such employer in exchange for salary, wages, or other remuneration.

"Subcontractor" means a person or entity that provides labor, supplies, or services to or for a contractor or another subcontractor in exchange for salary, wages, or other remuneration.

Effective January 1, 2021, public and private employers, contractors and subcontractors will begin required registration with, and use of the E-Verify system in order to verify the work authorization status of all newly hired employees. Vendor/Consultant/Contractor acknowledges and agrees to utilize the U.S. Department of Homeland Security's E-Verify System to verify the employment eligibility of:

a) All persons employed by Vendor/Consultant/Contractor to perform employment duties within Florida during the term of the contract; and

b) All persons (including sub-vendors/subconsultants/subcontractors) assigned by Vendor/Consultant/Contractor to perform work pursuant to the contract with the Department. The Vendor/Consultant/Contractor acknowledges and agrees that use of the U.S. Department of Homeland Security's E-Verify System during the term of the contract isa condition of the contract with the City of Opa-locka; and

Should vendor become successful Contractor awarded for the above-named project, by entering into this Contract, the Contractor becomes obligated to comply with the provisions of Section 448.095, Fla. Stat., "Employment Eligibility," as amended from time to time. This includes but is not limited to utilization of the E-Verify System to verify the work authorization status of all newly hired employees, and requiring all subcontractors to provide an affidavit attesting that the subcontractor does not employ, contract with, or subcontract with, an unauthorized alien. The contractor shall maintain a copy of such affidavit for the duration of the contract. Failure to comply will lead to termination of this Contract, or if a subcontractor knowingly violates the statute, the subcontract must be terminated immediately. If this contract is terminated for a violation of the statute by the Contractor, the Contractor may not be awarded a public contract for a period of 1 year after the date of termination.

Company Name: _____

Authorized Signature: _____

Print Name: _____

Title: _____

Date: _____

1st Reading/Public Hearing:
2nd Reading/Public Hearing:
Adopted:
Effective Date:
Sponsored by: Interim City Manager

ORDINANCE NO. 23-XXX

AN ORDINANCE OF THE CITY COMMISSION OF THE CITY OF OPA-LOCKA, FLORIDA, AMENDING THE ANNUAL ADOPTED GENERAL, PROPRIETARY AND SPECIAL REVENUE FUNDS BUDGETS FOR THE FISCAL YEAR COMMENCING OCTOBER 1, 2023 AND ENDING SEPTEMBER 30, 2024, ADJUSTING REVENUES AND EXPENDITURES AS REFLECTED IN EXHIBIT "A"; PROVIDING FOR THE EXPENDITURE OF FUNDS ESTABLISHED BY THE BUDGET; AUTHORIZING THE CITY MANAGER TO TAKE CERTAIN ACTIONS; PROVIDING FOR APPROPRIATION OF ALL BUDGETS AND EXPENDITURES; PROVIDING FOR FEES CONSISTENT WITH APPROPRIATIONS AND AMENDMENT; PROVIDING FOR INCORPORATION OF RECITALS; PROVIDING FOR CONFLICT AND REPEALER; PROVIDING FOR SEVERABILITY; PROVIDING FOR AN EFFECTIVE DATE.

WHEREAS, the City Commission of the City of Opa-Locka, FL adopted its 2023-2024 Fiscal Year General, Proprietary and Special Revenue Funds budgets by passage of Ordinance 23-16; and

WHEREAS, pursuant to Florida Statute 166.241(5), the governing body of each municipality at any time within a fiscal year or within 60 days following the end of fiscal year may amend a budget for that year as follows:

a) Appropriations for expenditures within a fund may be decreased or increased by motion recorded in the minutes if the total appropriations of the fund is not changed;
b) The governing body may establish procedures by which the designated budget officer may authorize budget amendments if the total appropriations of the fund is not changed;
c) If a budget amendment is required for a purpose not specifically authorized in paragraph (a) or paragraph (b), the budget amendment must be adopted in the same manner as the original budget unless otherwise specified in the municipality's charter; and

WHEREAS, pursuant to 4.7(c) of the City of Opa-Locka Charter, entitled "Appropriation Amendments During the Fiscal Year", the City Commission may otherwise amend the annual budget from time to time during the year, by ordinance, as it deems necessary to do so; and

WHEREAS, the City Commission desires to amend its 2023-2024 Fiscal Year General, Proprietary and Special Revenue Funds budgets as set forth in Exhibit "A".

NOW, THEREFORE, BE IT DULY ORDAINED BY THE CITY COMMISSION OF THE CITY OF OPA- LOCKA, FLORIDA:

SECTION 1. RECITALS ADOPTED

The recitals to the preamble herein are incorporated by reference.

SECTION 2. AUTHORIZATION

Pursuant to Article IV, Section 4.5 of the City Charter, the City Manager has recommended proposed Amended General, Proprietary and Special Revenue Funds Budgets to the City Commission for the Fiscal Year retroactive to October 1, 2023, a copy of which is attached hereto as Exhibit "A" and incorporated by reference herein.

The City Commission of the City of Opa-Locka hereby approves, adopts and ratifies the proposed Amended General, Proprietary and Special Revenue Funds Budgets for the Fiscal Year 2023-2024, and hereby appropriates the budgeted expenditures and revenues as set forth in the attached Exhibit "A".

The City Manager is authorized to expend or contract for expenditures, pursuant to the City of Opa-Locka Charter and the adopted Code of Ordinances in accordance with the adopted Amended General, Proprietary and Special Revenue Funds Budgets for Fiscal Year 2023-2024.

The department/division expenditure allocations established by the City Manager, as revised and summarized in the budget attached as Exhibit "A", are hereby adopted and ratified. Funds of the City for General, Proprietary and Special Revenue Funds Budgets shall be expended in accordance with the appropriations provided by the budget, which shall constitute an appropriation of amounts specified therein. Expenditure control shall be at the fund level. Funds may be expended by, and with the approval of, the City Manager and the City Commission, in accordance with the provisions of the City Charter, adopted Code of Ordinances and applicable laws. Supplemental appropriations and reduction of appropriations, if any, shall be made in accordance with the City Charter.

Any and all outstanding encumbrances as of September 30, 2023, shall not lapse at that time and appropriations have been hereby provided for those outstanding encumbrances that have been incurred prior to September 30, 2023, but are not expected to be paid until after then. Receipts from sources not anticipated in the attached budget may be appropriated and expensed by Ordinance duly enacted by the City Commission in accordance with the applicable law. Adjustments within the same fund to departmental appropriations made in the attached Budget may be approved, from time to time, in the appropriate lawful manner. The City Manager is authorized to approve adjustments to

the expenditure code allocations, within the limit of department appropriations made in the attached Budget and as otherwise consistent with the City of Opa-Locka's Code of Ordinances.

All Ordinances setting fees and charges, and all other fees and charges consistent with appropriations adopted herein, as may be amended during the fiscal year, are hereby ratified, confirmed and approved.

SECTION 3. SCRIVENER'S ERRORS.

Sections of this Ordinance may be renumbered or re-lettered and corrections of typographical errors which do not affect the intent may be authorized by the City Manager following review by the City Attorney and without need of public hearing, by filing a corrected copy of same with the City Clerk.

SECTION 4. EFFECTIVE DATE.

This Ordinance shall take effect upon the adoption of this Ordinance by the Commission of the City of Opa-Locka and upon a filing of a certified copy hereof with the Florida Department of State and is subject to the approval of the Governor or Governor's Designee.

SECTION 5. EFFECTIVE DATE.

This Ordinance shall take effect upon the adoption of this Ordinance by the Commission of the City of Opa-Locka and upon a filing of a certified copy hereof with the Florida Department of State and is subject to the approval of the Governor or Governor's Designee.

PASSED FIRST READING this_____ day of _____, 2023.

PASSED SECOND READING this_____ day of _____, 2023.

_____
John Taylor, Mayor

ATTEST:

_____
Joanna Flores, City Clerk

APPROVED AS TO FORM AND

LEGAL SUFFICIENCY:

_____
Burnadette Norris-Weeks, P.A.
City Attorney

Moved by: _____

Seconded by: _____

VOTE:

Commissioner Bass	_____ (Yes)	_____ (No)
Commissioner Kelley	_____ (Yes)	_____ (No)
Commissioner Williams	_____ (Yes)	_____ (No)
Vice Mayor Ervin	_____ (Yes)	_____ (No)
Mayor Taylor	_____ (Yes)	_____ (No)

DocuSign Envelope ID: 9E275BD4-46AA-4DE5-9006-2AFF247B76C5

City of Opa-locka
Agenda Cover Memo

Department Director:	Robert Anathan			**Department Director Signature:**	R. Anathan		
City Manager:	Darvin Williams			**CM Signature:**	DocuSigned by: Darvin Williams C46C07C1E8DE492...		
Commission Meeting Date:	Oct 25, 2023		**Item Type:** *(Enter X in box)*	**Resolution**	**Ordinance**		**Other**
					X		
Fiscal Impact: *(Enter X in box)* N/A	**Yes**	**No**	**Ordinance Reading:** *(Enter X in box)*		**1st Reading**		**2nd Reading**
					Yes	**No**	**Yes** / **No**
	X		**Public Hearing:** *(Enter X in box)*		X		X
Funding Source: *Account#:*	*(Enter Fund & Dept)* See Attachments		**Advertising Requirement:** *(Enter X in box)*		**Yes**		**No**
					X		
Contract/P.O. Required: *(Enter X in box)*	**Yes**	**No**	**RFP/RFQ/Bid#:**				
		X					
Strategic Plan Related *(Enter X in box)*	**Yes**	**No**	**Strategic Plan Priority Area:**		**Strategic Plan Obj./Strategy:** *(list the specific objective/strategy this item will address)*		
		X	**Enhance Organizational** ☐ **Bus. & Economic Dev** ☐ **Public Safety** ☐ **Quality of Education** ☐ **Qual. of Life & City Image** ☐ **Communication** ☐				
Sponsor Name	City Manager		**Department:** City Manager's Office		City Manager		

Short Title:

FY 24 Budget Amendment #1

Staff Summary:

Issue/Recommendation: A budget amendment is required to align the budget with current City requirements. Staff recommends the City Commission approve FY 24 Budget Amendment #1 on the first hearing.

History: The City Commission adopted the City FY 24 Budget on September 27, 2023 (Ordinance 2023-15) which was approved by the State. This budget was composed of $70.9 million of expenditures and $24.1 million of funding being transferred between various Funds, resulting in a total budget of $95.0 million.

Current Activity: There were various projects budgeted for FY 23 that were not completed by September 30, 2023. The primary purpose of this budget amendment is to rollover the portion of each project not utilized in FY 23 into FY 24 so that each project can be completed.

Financial Impact: This budget amendment can be summarized financially as follows:

Funding	
Revenue / Loans / Grants	$
Use Of Fund Balance	
Total Funding – Excluding Transfers-In	
Transfers-In	
Total Funding	$
Expenditure	
Expenditure – Excluding Transfers-Out	$
Transfers-Out	
Total Expenditure	$

Additional details on the financial impact are provided in the attachments, Summary By Fund and Detail By Line Item, which contain accounting information for the State review which is a highly detailed accounting version of what is presented in the Overview and Summary By Line Item attachments.

.Proposed Action:

Staff recommends that the City Commission approve the proposed amendments on the first hearing.

Attachment:

1. Budget Amendment Overview
2. Budget Amendment Summary By Line Item
3. Budget Amendment Summary By Fund
4. Budget Amendment Detail By Line Item
5. Ordinance

FY 24 Budget Amendment #1 Overview - First Hearing

Summary

Funding		Notes
Revenue / Loans / Grants	$ 501,011	(a)
Use Of Fund Balance	228,900	(b)
Total Funding – Excluding Transfers-In	729,911	
Transfer-In	78,900	
Total Funding	$ 808,811	
Expenditure		
Expenditure – Excluding Transfers-Out	$ 729,911	(c)
Transfers-Out	78,900	
Total Expenditure	$ 808,811	

Notes

		Orig Budget	Incr/(Decr)	Bgt. Amend #1
(a)	**Revenue / Loans / Grants**			
	Donation		$ 1,011	
	Urban Forestry Grant		500,000	
	Total Revenue / Loans / Grants		$ 501,011	
(b)	**Use Of/(Addition To) Fund Balance**			
	General Fund	$ 10,809,754	$ 78,900	$ 10,888,654
	Water-Sewer Operating Fund	842,932	-	842,932
	Stormwater Operating Fund	543,336	-	543,336
	Special Law Enforcement	144,761	150,000	294,761
	Law Enforcement Training Fund	47,500	-	47,500
	American Recovery Plan Act (ARPA)	6,964,562	-	6,964,562
	Total Use Of / (Addition To) Fund Balance	$ 19,352,845	$ 228,900	$ 19,581,745
(c)	**Expenditures**	Item #		
	Urban Forestry Project	3	$ 500,000	
	Police Tactical Equipment Carry-Over From FY 23	4	150,000	
	Gateway Project Carry-Over From FY 23	1	78,900	
	Commission Travel Expense	6	5,000	
	Code Compliance Uniforms	5	3,000	
	Meter Box	8	3,000	
	Tippping Fees	2	2,000	
	Special Events (Donation Funded)	9	1,011	
	Bank Fees	7	500	
	Expenditures - Gross		$ 743,411	
	Savings		(13,500)	
	Contingency		-	
	Expenditures - Net		$ 729,911	

FY 24 Budget Amendment #1 Summary By Line Item
First Hearing

#	Amount	Purpose	Funding Source
1	$78,900	City roadway entry marker project	Carryover of unspent encumbered FY 23 funds into FY 24
2	$2,000	Roads & Sidewalks tipping fees to dispose of removed sidewalks.	Roads & Sidewalks Contracted Services
3	$500,000	Urban forestry project to increase the City tree canopy and improve the care of the City's trees	Grant
4	$150,000	Police tactical equipment	Carryover of unspent encumbered FY 23 funds into FY 24
5	$3,000	Additional Code Compliance uniform expense	Savings from Code Compliance vacancy
6	$5,000	Additional Commission travel expense	Roads & Sidewalks vacancy savings
7	$500	ARPA bank account fees	ARPA Professional Services
8	$3,000	Meter boxes	Water Distribution Operating Expense
9	$1,011	Additional funding for Conga-locka	Donation

FY 24 Budget Amendment #1 - Summary By Fund - First Hearing

Total City				
	Governmental Funds	Enterprise Funds	ARPA Fund	Total
Adopted Budget				
Funding				
Revenue/Loans	33,403,814	18,076,379	50,000	51,530,193
Use Of / (Add To) Fund Bal	11,002,015	1,386,268	6,964,562	19,352,845
Total Funding Ex Trans-In	44,405,829	19,462,647	7,014,562	70,883,038
Transfer-in	17,441,656	6,718,702	-	24,160,358
Total Funding	61,847,485	26,181,349	7,014,562	95,043,396
Expenditure				
Expenditure - Ex Trans-Out	46,485,658	23,874,318	523,062	70,883,038
Transfer-Out	15,361,827	2,307,031	6,491,500	24,160,358
Total Expenditure	61,847,485	26,181,349	7,014,562	95,043,396
Amendment #1				
Funding				
Revenue/Loans	501,011	-	-	501,011
Use Of / (Add To) Fund Bal	228,900	-	-	228,900
Total Funding Ex Trans-In	729,911	-	-	729,911
Transfer-in	78,900	-	-	78,900
Total Funding	808,811	-	-	808,811
Expenditure				
Expenditure - Ex Trans-Out	729,911	-	-	729,911
Transfer-Out	78,900	-	-	78,900
Total Expenditure	808,811	-	-	808,811
Budget Thru Amend #1				
Funding				
Revenue/Loans	33,904,825	18,076,379	50,000	52,031,204
Use Of / (Add To) Fund Bal	11,230,915	1,386,268	6,964,562	19,581,745
Total Funding Ex Trans-In	45,135,740	19,462,647	7,014,562	71,612,949
Transfer-in	17,520,556	6,718,702	-	24,239,258
Total Funding	62,656,296	26,181,349	7,014,562	95,852,207
Expenditure				
Expenditure - Ex Trans-Out	47,215,569	23,874,318	523,062	71,612,949
Transfer-Out	15,440,727	2,307,031	6,491,500	24,239,258
Total Expenditure	62,656,296	26,181,349	7,014,562	95,852,207

Exhibit "A"

FY 24 Budget Amendment #1 - Summary By Fund - First Hearing

General Fund

		Budget Adopted	Amendment #1	Budget Thru Amend #1
Funding				
Revenue/Loans		23,741,232	1,011	23,742,243
Use Of / (Add To) Fund Bal		10,809,754	78,900	10,888,654
Total Funding - Ex Transfer-In		34,550,986	79,911	34,630,897
Transfer-In		4,644,689	-	4,644,689
Total Funding - Ex Transfer-In		39,195,675	79,911	39,275,586
Expenditure	**Div**			
Commission	10	107,535	5,000	112,535
City Manager	12	1,154,740	-	1,154,740
General Fund Non-Depart - Ex Trans Out	19	5,493,938	-	5,493,938
Human Resources	13	514,799	-	514,799
Clerk	16	487,282	-	487,282
Attorney	28	581,500	-	581,500
Finance	17	1,889,999	-	1,889,999
Planning & Community Dev	37	1,532,261	-	1,532,261
Building & Licenses	30	834,505	-	834,505
Parks & Recreation	72	2,086,256	1,011	2,087,267
Police	26	8,863,023	-	8,863,023
Code Enforcement	23	663,789	-	663,789
Building & Grounds Maintenance	39	1,732,883	-	1,732,883
Public Works - Admin	32	553,815	-	553,815
Public Works - Streets	41	579,726	(5,000)	574,726
Public Works - Trash	50	166,316	-	166,316
Public Works - Vehicle Maintenance	49	784,282	-	784,282
Total Expenditure - Ex Transfer-Out		28,026,649	1,011	28,027,660
Transfer-Out	19	11,169,026	78,900	11,247,926
Total Expenditure		39,195,675	79,911	39,275,586

Exhibit "A"

FY 24 Budget Amendment #1 - Summary By Fund - First Hearing

Governmental Funds										
	General Fund	Safe Neighborhood Capital Fund	People's Transportation Plan Fund	Town Center Fund	Debt Service Fund	Special Law Enforcement Fund	Law Enforcement Training Trust Fund	Insurance Service Fund	Information Technology Service Fund	Total Gov Funds
Adopted Budget										
Funding										
Revenue/Loans	23,741,232	2,617,636	1,500,000	296,746	4,995,700	250,000	2,500	-		33,403,814
Use Of / (Add To) Fund Bal	10,809,754	-	-	-	-	144,761	47,500	-		11,002,015
Total Funding Ex Trans-In	34,550,986	2,617,636	1,500,000	296,746	4,995,700	394,761	50,000	-	-	44,405,829
Transfer-in	4,644,689	6,681,274	-	617,787	144,385		-	3,624,983	1,728,538	17,441,656
Total Funding	39,195,675	9,298,910	1,500,000	914,533	5,140,085	394,761	50,000	3,624,983	1,728,538	61,847,485
Expenditure										
Expenditure - Ex Trans-Out	28,026,649	9,298,910	1,500,000	510,695	1,351,122	394,761	50,000	3,624,983	1,728,538	46,485,658
Transfer-Out	11,169,026	-	-	403,838	3,788,963	-	-	-	-	15,361,827
Total Expenditure	39,195,675	9,298,910	1,500,000	914,533	5,140,085	394,761		3,624,983	1,728,538	61,847,485
Amendment #1										
Funding										
Revenue/Loans	1,011	500,000	-	-	-	-	-	-	-	501,011
Use Of / (Add To) Fund Bal	78,900	-	-	-	-	150,000	-	-	-	228,900
Total Funding Ex Trans-In	79,911	500,000	-	-	-	150,000		-	-	729,911
Transfer-in	-	78,900	-	-	-	-		-	-	78,900
Total Funding	79,911	578,900	-	-	-	150,000		-	-	808,811
Expenditure										
Expenditure - Ex Trans-Out	1,011	578,900	-	-	-	150,000	-	-	-	729,911
Transfer-Out	78,900	-	-	-	-	-		-	-	78,900
Total Expenditure	79,911	578,900	-	-	-	150,000		-	-	808,811
Budget Thru Amend #1										
Funding										
Revenue/Loans	23,742,243	3,117,636	1,500,000	296,746	4,995,700	250,000		-	-	33,902,325
Use Of / (Add To) Fund Bal	10,888,654	-	-	-	-	294,761		-	-	11,183,415
Total Funding Ex Trans-In	34,630,897	3,117,636	1,500,000	296,746	4,995,700	544,761		-	-	45,085,740
Transfer-in	4,644,689	6,760,174	-	617,787	144,385	-		3,624,983	1,728,538	17,520,556
Total Funding	39,275,586	9,877,810	1,500,000	914,533	5,140,085	544,761		3,624,983	1,728,538	62,606,296
Expenditure										
Expenditure - Ex Trans-Out	28,027,660	9,877,810	1,500,000	510,695	1,351,122	544,761		3,624,983	1,728,538	47,165,569
Transfer-Out	11,247,926	-	-	403,838	3,788,963	-		-	-	15,440,727
Total Expenditure	39,275,586	9,877,810	1,500,000	914,533	5,140,085	544,761		3,624,983	1,728,538	62,606,296

Exhibit "A"

FY 24 Budget Amendment #1 - Summary By Fund - First Hearing

Enterprise Funds										
	Water-Sewer Operating Fund						Storm Water Op	Water Sewer CIP	Storm Water CIP	Total
	Water-Sewer Operating Divisions (Expense)									
	Water Division	Sewer Division	Water-Sewer Finance Division	Water Lines Division	CIP Mgmt Division	Total Water-Sewer Op Fund	Storm Water Op Fund	Total Water-Sewer CIP Fund	Storm Water CIP Fund	Total Enterprise Funds
Adopted Budget										
Funding										
Revenue/Loans						11,539,655	1,951,000	3,085,724	1,500,000	18,076,379
Use Of / (Add To) Fund Bal						842,932	543,336	-	-	1,386,268
Total Funding Ex Trans-In						12,382,587	2,494,336	3,085,724	1,500,000	19,462,647
Transfer-in						224,271		4,241,500	2,252,931	6,718,702
Total Funding	-	-	-	-	-	12,606,858	2,494,336	7,327,224	3,752,931	26,181,349
Expenditure										
Expenditure - Ex Trans-Out	2,348,636	5,023,894	3,316,549	245,132	342,904	11,277,115	1,517,048	7,327,224	3,752,931	23,874,318
Transfer-Out	-	-	1,329,743	-	-	1,329,743	977,288	-	-	2,307,031
Total Expenditure	2,348,636	5,023,894	4,646,292	245,132	342,904	12,606,858	2,494,336	7,327,224	3,752,931	26,181,349
Amendment #1										
Funding										
Revenue/Loans						-	-	-	-	-
Use Of / (Add To) Fund Bal						-	-	-	-	-
Total Funding Ex Trans-In						-	-	-	-	-
Transfer-in						-	-	-	-	-
Total Funding	-	-	-	-	-	-	-	-	-	-
Expenditure										
Expenditure - Ex Trans-Out	(3,000)	-	-	3,000	-	-	-	-	-	-
Transfer-Out	-	-	-	-	-	-	-	-	-	-
Total Expenditure	(3,000)	-	-	3,000	-	-	-	-	-	-
Budget Thru Amend #1										
Funding										
Revenue/Loans						11,539,655	1,951,000	3,085,724	1,500,000	18,076,379
Use Of / (Add To) Fund Bal						842,932	543,336	-	-	1,386,268
Total Funding Ex Trans-In						12,382,587	2,494,336	3,085,724	1,500,000	19,462,647
Transfer-in						224,271	-	4,241,500	2,252,931	6,718,702
Total Funding	-	-	-	-	-	12,606,858	2,494,336	7,327,224	3,752,931	26,181,349
Expenditure										
Expenditure - Ex Trans-Out	2,345,636	5,023,894	3,316,549	248,132	342,904	11,277,115	1,517,048	7,327,224	3,752,931	23,874,318
Transfer-Out	-	-	1,329,743	-	-	1,329,743	977,288	-	-	2,307,031
Total Expenditure	2,345,636	5,023,894	4,646,292	248,132	342,904	12,606,858	2,494,336	7,327,224	3,752,931	26,181,349

Exhibit "A"

FY 24 Budget Amendment #1 - Detail - First Hearing

#	Amendment Details				Budget	Adj	Revised	
1	**Safe Neighborhood - Gateway**						-	
	SafeNeigh	Exp	44-541847	Gateways	140,000	78,900	218,900	Carry-over from FY 23 budget for Gateway signage
	SafeNeigh	Trf-In	320-381001	Trf-In from General Fund	1,767,797	78,900	1,846,697	
	Gen Fund	Fund Bal	001-383010	Use of Fund Balance	10,809,754	78,900	10,888,654	
	Non Dept	Trf-Out	19-581320	Trf-Out to Safe Neigh CIP	1,767,797	78,900	1,846,697	
							-	
2	**PW - Roads & Sidewalks - Tipping Fees**						-	
	PW-Strt	Exp	41-541431	Tipping Fees	-	2,000	2,000	Funding needed for Tipping Fee for old sidewalk material
	PW - Strt	Exp	41-541340	Other Contracted Services	42,000	(2,000)	40,000	
							-	
3	**Safe Neighborhood - Grant**						-	
	SafeNeigh	Exp	44-541862	Urban Forestry Project	-	500,000	500,000	New Forestry Grant received
	SafeNeigh	Rev	320-334723	Urban Forestry Grant	-	500,000	500,000	
							-	
4	**Special Law Enforcement**						-	
	SLE	Exp	65-521548	Special Supplies	20,000	150,000	170,000	Carry-over from FY 23 of funding for Police tactical gear
	SLE	Fund Bal	165-383010	Use of Fund Balance	144,761	150,000	294,761	
							-	
5	**Code Enforcement - Uniform Expense**						-	
	Code	Exp	23-521521	Clothing & Uniform Expense	1,500	3,000	4,500	Additional funding for uniforms
	Code	Exp	23-521120	Salaries - Reg	390,900	(3,000)	387,900	
							-	
6	**Commission - Travel**						-	
	Comm	Exp	10-511400	Travel	5,000	5,000	10,000	Travel Budget already used and additional funded needed
	PW Strt	Exp	41-541120	Salaries - Reg	168,118	(3,000)	165,118	
	PW Strt	Exp	41-541230	Life & Health Insurance	26,011	(2,000)	24,011	
							-	
7	**ARPA - General Expense**						-	
	ARPA	Exp	15-538493	General Expense (Bank Fees)	-	500	500	Funding needed for Bank Fees for ARPA bank account
	ARPA	Exp	15-538312	Other Professional Services	-	(500)	(500)	
8	**WS - Service Line Maint**							
	WS-SL-Mnt	Exp	63-533520	Operating Expense	1,000	3,000	4,000	Additional funding needed for Meter Boxes
	WS-Wtr	Exp	64-533520	Operating Expense	35,000	(3,000)	32,000	
							-	
9	**Parks & Recreation - Special Events**						-	
	P & Rec	Exp	72-572403	Special Events	413,400	1,011	414,411	Donation for Conga-locka for Special Events expense
	Gen Fund	Rev	001-347900	Donations	-	1,011	1,011	

Exhibit "A"

1st Reading/Public Hearing:
2nd Reading/Public Hearing:
Adopted:
Effective Date:
Sponsored by: Interim City Manager

ORDINANCE NO. 23-XXX

AN ORDINANCE OF THE CITY COMMISSION OF THE CITY OF OPA-LOCKA, FLORIDA, AMENDING THE ANNUAL ADOPTED GENERAL, PROPRIETARY AND SPECIAL REVENUE FUNDS BUDGETS FOR THE FISCAL YEAR COMMENCING OCTOBER 1, 2022 AND ENDING SEPTEMBER 30, 2023, ADJUSTING REVENUES AND EXPENDITURES AS REFLECTED IN EXHIBIT "A"; PROVIDING FOR THE EXPENDITURE OF FUNDS ESTABLISHED BY THE BUDGET; AUTHORIZING THE CITY MANAGER TO TAKE CERTAIN ACTIONS; PROVIDING FOR APPROPRIATION OF ALL BUDGETS AND EXPENDITURES; PROVIDING FOR FEES CONSISTENT WITH APPROPRIATIONS AND AMENDMENT; PROVIDING FOR INCORPORATION OF RECITALS; PROVIDING FOR CONFLICT AND REPEALER; PROVIDING FOR SEVERABILITY; PROVIDING FOR AN EFFECTIVE DATE.

WHEREAS, the City Commission of the City of Opa-Locka, FL adopted its 2022-2023 Fiscal Year General, Proprietary and Special Revenue Funds budgets by passage of Ordinance 22-17, amended by Ordinance 23-04, Ordinance 23-05, Ordinance 23-07 and Ordinance 23-12, Ordinance 23-15, Ordinance 23-17; and

WHEREAS, pursuant to Florida Statute 166.241(5), the governing body of each municipality at any time within a fiscal year or within 60 days following the end of fiscal year may amend a budget for that year as follows:

a) Appropriations for expenditures within a fund may be decreased or increased by motion recorded in the minutes if the total appropriations of the fund is not changed;
b) The governing body may establish procedures by which the designated budget officer may authorize budget amendments if the total appropriations of the fund is not changed;
c) If a budget amendment is required for a purpose not specifically authorized in paragraph (a) or paragraph (b), the budget amendment must be adopted in the same manner as the original budget unless otherwise specified in the municipality's charter; and

WHEREAS, pursuant to 4.7(c) of the City of Opa-Locka Charter, entitled "Appropriation Amendments During the Fiscal Year", the City Commission may otherwise amend the annual budget from time to time during the year, by ordinance, as it deems necessary to do so; and

WHEREAS, the City Commission desires to amend its 2022-2023 Fiscal Year General, Proprietary and Special Revenue Funds budgets as set forth in Exhibit "A".

NOW, THEREFORE, BE IT DULY ORDAINED BY THE CITY COMMISSION OF THE CITY OF OPA- LOCKA, FLORIDA:

SECTION 1. RECITALS ADOPTED

The recitals to the preamble herein are incorporated by reference.

SECTION 2. AUTHORIZATION

Pursuant to Article IV, Section 4.5 of the City Charter, the City Manager has recommended proposed Amended General, Proprietary and Special Revenue Funds Budgets to the City Commission for the Fiscal Year retroactive to October 1, 2022, a copy of which is attached hereto as Exhibit "A" and incorporated by reference herein.

The City Commission of the City of Opa-Locka hereby approves, adopts and ratifies the proposed Amended General, Proprietary and Special Revenue Funds Budgets for the Fiscal Year 2022-2023, and hereby appropriates the budgeted expenditures and revenues as set forth in the attached Exhibit "A".

The City Manager is authorized to expend or contract for expenditures, pursuant to the City of Opa-Locka Charter and the adopted Code of Ordinances in accordance with the adopted Amended General, Proprietary and Special Revenue Funds Budgets for Fiscal Year 2022-2023.

The department/division expenditure allocations established by the City Manager, as revised and summarized in the budget attached as Exhibit "A", are hereby adopted and ratified. Funds of the City for General, Proprietary and Special Revenue Funds Budgets shall be expended in accordance with the appropriations provided by the budget, which shall constitute an appropriation of amounts specified therein. Expenditure control shall be at the fund level. Funds may be expended by, and with the approval of, the City Manager and the City Commission, in accordance with the provisions of the City Charter, adopted Code of Ordinances and applicable laws. Supplemental appropriations and reduction of appropriations, if any, shall be made in accordance with the City Charter.

Any and all outstanding encumbrances as of September 30, 2022, shall not lapse at that time and appropriations have been hereby provided for those outstanding encumbrances that have been incurred prior to September 30, 2022, but are not expected to be paid until after then. Receipts from sources not anticipated in the attached budget may be appropriated and expensed by Ordinance duly enacted by the City Commission in accordance with the applicable law. Adjustments within the same fund to departmental appropriations made in the attached Budget may be approved, from time to time, in the appropriate lawful manner. The City Manager is authorized to approve adjustments to

the expenditure code allocations, within the limit of department appropriations made in the attached Budget and as otherwise consistent with the City of Opa-Locka's Code of Ordinances.

All Ordinances setting fees and charges, and all other fees and charges consistent with appropriations adopted herein, as may be amended during the fiscal year, are hereby ratified, confirmed and approved.

SECTION 3. SCRIVENER'S ERRORS.

Sections of this Ordinance may be renumbered or re-lettered and corrections of typographical errors which do not affect the intent may be authorized by the City Manager following review by the City Attorney and without need of public hearing, by filing a corrected copy of same with the City Clerk.

SECTION 4. EFFECTIVE DATE.

This Ordinance shall take effect upon the adoption of this Ordinance by the Commission of the City of Opa-Locka and upon a filing of a certified copy hereof with the Florida Department of State and is subject to the approval of the Governor or Governor's Designee.

SECTION 5. EFFECTIVE DATE.

This Ordinance shall take effect upon the adoption of this Ordinance by the Commission of the City of Opa-Locka and upon a filing of a certified copy hereof with the Florida Department of State and is subject to the approval of the Governor or Governor's Designee.

PASSED FIRST READING this_____ day of _____, 2023.

PASSED SECOND READING this_____ day of _____, 2023.

_____
John Taylor, Mayor

ATTEST:

_____
Joanna Flores, City Clerk

APPROVED AS TO FORM AND

LEGAL SUFFICIENCY:

_____
Burnadette Norris-Weeks, P.A.
City Attorney

Moved by: _____

Seconded by: _____

VOTE:

Commissioner Bass	_____ (Yes)	_____ (No)
Commissioner Kelley	_____ (Yes)	_____ (No)
Commissioner Williams	_____ (Yes)	_____ (No)
Vice Mayor Ervin	_____ (Yes)	_____ (No)
Mayor Taylor	_____ (Yes)	_____ (No)

DocuSign Envelope ID: 9E275BD4-46AA-4DE5-9006-2AFF247B76C5

City of Opa-locka
Agenda Cover Memo

Department Director:	Robert Anathan			**Department Director Signature:**	R. Anathan		
City Manager:	Darvin Williams			**CM Signature:**	DocuSigned by: Darvin Williams C48C07C1E8DE492...		
Commission Meeting Date:	Oct 25, 2023		**Item Type:** *(Enter X in box)*	**Resolution**	**Ordinance**	**Other**	
					X		
Fiscal Impact: *(Enter X in box)* N/A	**Yes**	**No**	**Ordinance Reading:** *(Enter X in box)*		**1st Reading**	**2nd Reading**	
	X		**Public Hearing:** *(Enter X in box)*		**Yes** / **No**	**Yes** / **No**	
					X	X	
Funding Source: *Account#:*	*(Enter Fund & Dept)* See Attachments		**Advertising Requirement:** *(Enter X in box)*		**Yes**	**No**	
					X		
Contract/P.O. Required: *(Enter X in box)*	**Yes**	**No**	**RFP/RFQ/Bid#:**				
		X					
Strategic Plan Related *(Enter X in box)*	**Yes**	**No**	**Strategic Plan Priority Area:**		**Strategic Plan Obj./Strategy:** *(list the specific objective/strategy this item will address)*		
		X	**Enhance Organizational** ☐ **Bus. & Economic Dev** ☐ **Public Safety** ☐ **Quality of Education** ☐ **Qual. of Life & City Image** ☐ **Communication** ☐				
Sponsor Name	City Manager		**Department:** City Manager's Office		City Manager		

Short Title:

FY 23 Budget Amendment #6 – First Hearing

Staff Summary:

Issue/Recommendation: A budget amendment is required to align the City budget with current requirements. Staff recommends the City Commission approve FY 23 Budget Amendment #6 on first hearing.

History: The City Commission adopted the City FY 23 Budget on October 5, 2022 (Ordinance 2022-17) which was subsequently approved by the State. This budget was composed of $64.3 million of expenditures and $20.6 million of funding being transferred between various Funds, resulting a total budget of $84.9 million.

On February 8, 2023, the City Commission approved FY 23 Budget Amendment #1. The primary function of this amendment was to bring into FY 23 those projects, and their associated funding, that had been approved

in FY 22 but hadn't been completed by the end of FY 22. Consequently, $5.4 million of expenditures and associated funding were added, as well as another $3.7 million of interfund transfers, reflecting movement of funds from where they resided, e.g., the General Fund, to where the projects would be managed and completed, e.g., the Safe Neighborhood CIP Fund. This resulted in an amended budget of $69.7 million of expenditures plus another $24.3 million of interfund transfers reflecting movement of funds from one Fund to another.

On March 22, 2023, the Commission approved FY 23 Budget Amendment #2. The primary purpose of this amendment was to bring in five community-selected projects funded by $1.0 million of ARPA funds and $250,000 of an anticipated grant. Additionally, three CIP projects were reprioritized, freeing up $47,275 of Stormwater Fund Balance. Three additional items included the rental of mobile office trailer, an irrigation truck, the carving out of a small Community Policing Budget and a relocation assistance grant program, all funded with either vacancy savings or grants. The net impact of Budget Amendment #2 was an expenditure increase of $1,242,725, all funded with either grants or use of ARPA Fund Balance.

On April 26, the Commission approved FY 23 Budget Amendment #3, increasing expenditures by $1,072,892 to $72,083,483, excluding interfund transfers, primarily related to capital projects.

On June 26, the Commission approved FY 24 Budget Amendment #4, increasing expenditures by $779,651, with much of the increasing in revenues of $1,163,461 directly associated with the increased expenditures,

On September 27, the Commission approved FY 24 Budget Amendment #5, increasing expenditures by $150,200 with an additional increase of $8,225 of Interfund Transfers for a total bottom-line impact of $158,425.

Current Activity: The current Budget Amendment is focused on ensuring that all year-end procurement has sufficient budget.

Financial Impact: This budget amendment can be summarized financially as follows:

Funding	
Revenue / Loans / Grants	$
(Addition To) Fund Balance	
Total Funding – Excluding Transfers-In	
Transfers-In	
Total Funding	$
Expenditure	
Expenditure – Excluding Transfers-Out	$
Transfers-Out	
Total Expenditure	$

Additional details on the above are presented in the Overview and Summary By Line Item attachments. In addition to these details, greater detail is presented in the attachments, Summary By Fund and Detail By Line Item, which contain detailed accounting information for the State review.

FY 23 Budget Amendment #6 Overview - First Hearing

Summary

Funding			Notes
Revenue / Loans / Grants	$	-	(a)
Use Of Fund Balance		(4,815)	(b)
Total Funding – Excluding Transfers-In		(4,815)	
Transfer-In		3,865	
Total Funding	$	(950)	
Expenditure			
Expenditure – Excluding Transfers-Out	$	(4,815)	(c)
Transfers-Out		3,865	
Total Expenditure	$	(950)	

Notes

		Bgt. Amend #5	Incr/(Decr)	Bgt. Amend #6
(a)	**Revenue / Loans / Grants**			
	Grant Adjustments		$ -	
	CRA TIF Contribution Methodology Change		-	
	Total Revenue / Loans / Grants		$ -	
(b)	**Use Of/(Addition To) Fund Balance**			
	General Fund	$ 4,398,719	$ -	$ 4,398,719
	Water-Sewer Operating Fund	164,020	(4,815)	159,205
	Stormwater Operating Fund	1,376,755	-	1,376,755
	Special Law Enforcement	55,000	-	55,000
	American Recovery Plan Act (ARPA)	6,770,225	-	6,770,225
	Total Use Of / (Addition To) Fund Balance	$ 12,764,719	$ (4,815)	$ 12,759,904
(c)	**Expenditures**	Item #		
	Police Compensation & Equipment	7	$ 56,500	
	City Attorney Retainer & Litigation	4	33,000	
	Building & Licenses Compensation	1	17,800	
	IT Compensation	9	16,000	
	Code Compensation	6	14,000	
	CIP Management Compensation	8	14,000	
	Debt Service	10	6,065	
	Finance Compensation	5	5,250	
	Commission Special Events	2	5,000	
	Non-Department Rentals	3	5,000	
	Expenditures - Gross		$ 172,615	
	Savings		(177,430)	
	Contingency		-	
	Expenditures - Net		$ (4,815)	

FY 23 Budget Amendment #6 Summary By Line Item
First Hearing

#	Amount	Purpose	Funding Source
1	$17,800	Building & Licenses compensation misclassification issue. Full-Time vs. Part-Time	Savings from Building & Licenses Contracted Services
2	$5,000	Additional Special Events expenditure	Savings from City Clerk Contracted Services
3	$5,000	Additional year-end rentals	Savings from red light camera services due to contractor delay in installing additional red light cameras
4	$33,000	City Attorney increased monthly retainer and litigation fees.	Savings from Roads & Sidewalks Contracted Services
5	$5,250	Minor adjustments to three Finance accounts	Savings from Finance Contracted Services
6	$14,000	Code Compliance compensation misclassification issue. Executive vs. Regular	Savings from Roads & Sidewalks Operating Expense
7	$56,500	Police compensation misclassification issue. Full-Time vs. Part-Time	Savings from Police Part-Time Compensation
8	$14,000	CIP Management compensation misclassification issue. Executive vs. Regular	Savings from CIP Management Regular Compensation
9	$16,000	IT compensation misclassification issue. Executive vs. Regular	Savings from IT Regular Compensation
10	$6,065	Increase in General Fund and Stormwater Fund contribution to Miami-Dade debt service	Reduction in Water-Sewer Fund contribution to Miami-Dade debt service

FY 23 Budget Amendment #6 - Summary By Fund - First Hearing

Total City				
	Governmental Funds	Enterprise Funds	ARPA Fund	Total
Budget Thru Amendment #5				
Funding				
Revenue/Loans	29,941,888	24,327,001	-	54,268,889
Use Of / (Add To) Fund Bal	7,539,465	2,963,634	8,186,653	18,689,752
Total Funding Ex Trans-In	37,481,353	27,290,635	8,186,653	72,958,641
Transfer-in	16,709,228	9,488,872	-	26,198,100
Total Funding	54,190,581	36,779,507	8,186,653	99,156,741
Expenditure				
Expenditure - Ex Trans-Out	39,617,986	32,565,454	775,200	72,958,641
Transfer-Out	14,572,594	4,214,053	7,411,453	26,198,100
Total Expenditure	54,190,581	36,779,507	8,186,653	99,156,741
Amendment #6				
Funding				
Revenue/Loans	-	-	-	-
Use Of / (Add To) Fund Bal	-	(4,815)	-	(4,815)
Total Funding Ex Trans-In	-	(4,815)	-	(4,815)
Transfer-in	3,865	-	-	3,865
Total Funding	3,865	(4,815)	-	(950)
Expenditure				
Expenditure - Ex Trans-Out	-	(4,815)	-	(4,815)
Transfer-Out	3,865	-	-	3,865
Total Expenditure	3,865	(4,815)	-	(950)
Budget Thru Amendment #6				
Funding				
Revenue/Loans	29,941,888	24,327,001	-	54,268,889
Use Of / (Add To) Fund Bal	7,539,465	2,958,819	8,186,653	18,684,937
Total Funding Ex Trans-In	37,481,353	27,285,820	8,186,653	72,953,826
Transfer-in	16,713,093	9,488,872	-	26,201,965
Total Funding	54,194,446	36,774,692	8,186,653	99,155,791
Expenditure				
Expenditure - Ex Trans-Out	39,617,986	32,560,639	775,200	72,953,826
Transfer-Out	14,576,459	4,214,053	7,411,453	26,201,965
Total Expenditure	54,194,446	36,774,692	8,186,653	99,155,791

Exhibit "A"

FY 23 Budget Amendment #6 - Summary By Fund - First Hearing

General Fund

	Div	Budget Thru Amend #5	Amendment #6	Budget Thru Amend #6
Funding				
Revenue/Loans		20,564,818	-	20,564,818
Use Of / (Add To) Fund Bal		7,514,330	-	7,514,330
Total Funding - Ex Transfer-In		28,079,148	-	28,079,148
Transfer-In		4,295,437	-	4,295,437
Total Funding		32,374,585	-	32,374,585
Expenditure	**Div**			
Commission	10	179,478	5,000	184,478
City Manager	12	906,871	-	906,871
General Fund Non-Depart - Ex Trans Out	19	2,484,765	-	2,484,765
Human Resources	13	364,588	-	364,588
Clerk	16	488,028	(8,865)	479,163
Attorney	28	582,000	33,000	615,000
Finance	17	1,207,364	-	1,207,364
Planning & Community Dev	37	621,461	-	621,461
Building & Licenses	30	758,790	17,800	776,590
Parks & Recreation	72	1,416,153	-	1,416,153
Police	26	8,155,999	-	8,155,999
Code Enforcement	23	539,988	14,000	553,988
Building & Grounds Maintenance	39	1,070,473	-	1,070,473
Public Works - Admin	32	566,556	-	566,556
Public Works - Streets	41	1,368,366	(64,800)	1,303,566
Public Works - Trash	50	81,400	-	81,400
Public Works - Vehicle Maintenance	49	814,622	-	814,622
Total Expenditure - Ex Transfer-Out		21,606,902	(3,865)	21,603,037
Transfer-Out	19	10,767,683	3,865	10,771,548
Total Expenditure		32,374,585	-	32,374,585

Exhibit "A"

FY 23 Budget Amendment #6 - Summary By Fund - First Hearing

Governmental Funds	General Fund	Safe Neighborhood Capital Fund	People's Transportation Plan Fund	Town Center Fund	Debt Service Fund	Special Law Enforcement Fund	Law Enforcement Training Trust Fund	Insurance Service Fund	Information Technology Service Fund	Total Gov Funds
Budget Thru Amendment #5										
Funding										
Revenue/Loans	20,564,818	2,883,278	1,193,119	288,773	4,770,900	240,000	1,000	-	-	29,941,888
Use Of / (Add To) Fund Bal	7,514,330	-	-	-	-	(23,865)	49,000	-	-	7,539,465
Total Funding Ex Trans-In	28,079,148	2,883,278	1,193,119	288,773	4,770,900	216,135	50,000	-	-	37,481,353
Transfer-In	4,295,437	6,134,109	-	747,023	121,329	-	-	3,679,139	1,732,191	16,709,228
Total Funding	32,374,585	9,017,387	1,193,119	1,035,796	4,892,229	216,135	50,000	3,679,139	1,732,191	54,190,581
Expenditure										
Expenditure - Ex Trans-Out	21,606,902	8,944,258	1,193,119	880,275	1,315,967	216,135	50,000	3,679,139	1,732,191	39,617,986
Transfer-Out	10,767,683	73,129	-	155,521	3,576,262	-	-	-	-	14,572,594
Total Expenditure	32,374,585	9,017,387	1,193,119	1,035,796	4,892,229	216,135	50,000	3,679,139	1,732,191	54,190,581
Amendment #6										
Funding										
Revenue/Loans	-	-	-	-	-	-	-	-	-	-
Use Of / (Add To) Fund Bal	-	-	-	-	-	-	-	-	-	-
Total Funding Ex Trans-In	-	-	-	-	-	-		-	-	-
Transfer-In	-	-	-	-	3,865	-		-	-	3,865
Total Funding	-	-	-	-	3,865	-		-	-	3,865
Expenditure										
Expenditure - Ex Trans-Out	(3,865)	-	-	-	3,865	-	-	-	-	-
Transfer-Out	3,865	-	-	-	-	-		-	-	3,865
Total Expenditure	-	-	-	-	3,865	-		-	-	3,865
Budget Thru Amendment #6										
Funding										
Revenue/Loans	20,564,818	2,883,278	1,193,119	288,773	4,770,900	240,000	1,000	-	-	29,941,888
Use Of / (Add To) Fund Bal	7,514,330	-	-	-	-	(23,865)	49,000	-	-	7,539,465
Total Funding Ex Trans-In	28,079,148	2,883,278	1,193,119	288,773	4,770,900	216,135	50,000	-	-	37,481,353
Transfer-In	4,295,437	6,134,109	-	747,023	125,194	-	-	3,679,139	1,732,191	16,713,093
Total Funding	32,374,585	9,017,387	1,193,119	1,035,796	4,896,094	216,135	50,000	3,679,139	1,732,191	54,194,446
Expenditure										
Expenditure - Ex Trans-Out	21,603,037	8,944,258	1,193,119	880,275	1,319,832	216,135	50,000	3,679,139	1,732,191	39,617,986
Transfer-Out	10,771,548	73,129	-	155,521	3,576,262	-	-	-	-	14,576,459
Total Expenditure	32,374,585	9,017,387	1,193,119	1,035,796	4,896,094	216,135	50,000	3,679,139	1,732,191	54,194,446

Exhibit "A"

FY 23 Budget Amendment #6 - Summary By Fund - First Hearing

Enterprise Funds										
	Water-Sewer Operating Fund						Storm Water Op	Water Sewer CIP	Storm Water CIP	Total
	Water-Sewer Operating Divisions (Expense)									
	Water Division 64	Sewer Division 35	Water-Sewer Finan Div 61	Water Lines Div 63	Water-Sewer CIP Div 75	Total Water-Sewer Op Fund	Storm Water Op Fund 43	Total Water-Sewer CIP Fund 86	Storm Water CIP Fund 87	Total Enterprise Funds
Budget Thru Amendment #5										
Funding										
Revenue/Loans						10,788,507	2,279,376	4,259,118	7,000,000	24,327,001
Use Of / (Add To) Fund Bal						531,520	2,432,114	-	-	2,963,634
Total Funding Ex Trans-In						11,320,027	4,711,490	4,259,118	7,000,000	27,290,635
Transfer-in						183,284	-	4,933,453	4,372,135	9,488,872
Total Funding	-	-	-	-	-	11,503,311	4,711,490	9,192,571	11,372,135	36,779,507
Expenditure										
Expenditure - Ex Trans-Out	1,897,940	4,758,666	2,948,321	253,798	271,727	10,130,452	1,516,920	9,192,571	11,725,511	32,565,454
Transfer-Out	-	-	1,372,859	-	-	1,372,859	2,841,194	-	-	4,214,053
Total Expenditure	1,897,940	4,758,666	4,321,180	253,798	271,727	11,503,311	4,358,114	9,192,571	11,725,511	36,779,507
Amendment #6										
Funding										
Revenue/Loans						-	-	-	-	-
Use Of / (Add To) Fund Bal						(4,815)	-	-	-	(4,815)
Total Funding Ex Trans-In						(4,815)	-	-	-	(4,815)
Transfer-in						-	-	-	-	-
Total Funding	-	-	-	-	-	(4,815)	-	-	-	(4,815)
Expenditure										
Expenditure - Ex Trans-Out	-	-	(4,815)	-	-	(4,815)	-	-	-	(4,815)
Transfer-Out	-	-	-	-	-	-	-	-	-	-
Total Expenditure	-	-	(4,815)	-	-	(4,815)	-	-	-	(4,815)
Budget Thru Amendment #6										
Funding										
Revenue/Loans						10,788,507	2,279,376	4,259,118	7,000,000	24,327,001
Use Of / (Add To) Fund Bal						526,705	2,432,114	-	-	2,958,819
Total Funding Ex Trans-In						11,315,212	4,711,490	4,259,118	7,000,000	27,285,820
Transfer-in						183,284	-	4,933,453	4,372,135	9,488,872
Total Funding	-	-	-	-	-	11,498,496	4,711,490	9,192,571	11,372,135	36,774,692
Expenditure										
Expenditure - Ex Trans-Out	1,897,940	4,758,666	2,943,506	253,798	271,727	10,125,637	1,516,920	9,192,571	11,725,511	32,560,639
Transfer-Out	-	-	1,372,859	-	-	1,372,859	2,841,194	-	-	4,214,053
Total Expenditure	1,897,940	4,758,666	4,316,365	253,798	271,727	11,498,496	4,358,114	9,192,571	11,725,511	36,774,692

Exhibit "A"

FY 23 Budget Amendment #6 - Detail - First Hearing

#				Amendment Details	Budget	Adj	Revised	
1	**Building & Licenses - Salaries**							
	Bld&Lic	Exp	30-524120	Salaries - Reg	224,289	17,000	241,289	Amendment to cover apparent misclassification between full-time and part-time compensation
	Bld&Lic	Exp	30-524140	Salaries - Overtime	1,500	800	2,300	
	PW-Strt	Exp	41-541340	Other Contracted Services	353,948	(17,800)	336,148	
							-	
2	**Commission - Special Events**							
	Comm	Exp	10-572403	Special Events	58,500	5,000	63,500	Small adjustments needed to close out account for FY 2023
	Clerk	Exp	16-512340	Other Contracted Services	17,000	(5,000)	12,000	
							-	
3	**Non-Department - Rentals & Leases**							
	Non-Dept	Exp	19-519440	Rentals & Leases	44,188	5,000	49,188	Small adjustments needed to close out account for FY 2023
	Non-Dept	Exp	19-512497	Red Light Camera Services	546,284	(5,000)	541,284	
							-	
4	**Attorney - City Attorney Retainer**						-	
	Attrny	Exp	28-514370	City Attorney Retainer	192,000	18,000	210,000	Amendment needed to cover the increase in Retainer Fees from new contract.
	PW-Strt	Exp	41-541340	Other Contracted Services	336,148	(33,000)	303,148	
	Attrny	Exp	28-514312	City Attorney Litigation	200,000	15,000	215,000	
							-	
5	**Finance - Salaries, General Expenses, Operating Expenses**						-	
	Fin	Exp	17-513110	Salaries - Executive	138,117	1,500	139,617	Small adjustments needed to close out account for FY 2023
	Fin	Exp	17-513493	General Expenses	20,000	1,750	21,750	
	Fin	Exp	17-513520	Operating Expenses	5,000	2,000	7,000	
	Fin	Exp	17-513340	Other Contracted Services	75,000	(5,250)	69,750	
							-	
6	**Code - Salaries, FICA**						-	
	Code	Exp	23-52110	Salaries - Executive	-	5,500	5,500	Amendment to cover apparent misclassification between regular and executive compensation
	Code	Exp	23-521210	FICA	27,347	8,500	35,847	
	PW-Strt	Exp	41-541520	Operating Expenses	25,578	(14,000)	11,578	
							-	
7	**Police - Salaries, Overtime, FICA, Public Safety Equip**						-	
	Pol	Exp	26-521120	Salaries - Reg	4,406,230	18,500	4,424,730	Amendment to cover apparent misclassification between full-time and part-time compensation
	Pol	Exp	26-521140	Overtime	405,000	12,000	417,000	
	Pol	Exp	26-521210	FICA	360,423	10,000	370,423	
	Pol	Exp	26-521644	Public Safety Equipment	62,000	16,000	78,000	
	Pol	Exp	26-521130	Part Time	115,123	(56,500)	58,623	
							-	
8	**CIP Management Division - Salaries Executive**						-	
	WS-CIP-Mgt	Exp	75-535110	Salaries - Executives	-	14,000	14,000	Amendment to cover apparent misclassification between regular and executive compensation
	WS-CIP-Mgt	Exp	75-535120	Salaries - Reg	194,316	(14,000)	180,316	

FY 23 Budget Amendment #6 - Detail - First Hearing

#				Amendment Details	Budget	Adj	Revised	
							-	
9	**IT - Salaries Exc**						-	
	IT	Exp	85-512110	Salaries - Executive	75,354	16,000	91,354	Miss-classification in acct, amendment needed to eliminate year end issues
	IT	Exp	85-512120	Salaries - Reg	110,794	(16,000)	94,794	
							-	
10	**Debt Service - Interest and Principal**						-	
	Debt Svc	Exp	83-513720	Bond Interest - FY 11 Bond	82,235	50	82,285	Small adjustments needed to close out account for FY 2023
	Debt Svc	Exp	83-513721	Bond Interest - FY 15 Note	170,970	1,200	172,170	
	Debt Svc	Exp	83-513711	Bond Principal-FY 15 Note	352,242	(1,250)	350,992	
	Debt Svc	Exp	83-517722	Principal -MD Debt	46,400	3,500	49,900	
	Debt Svc	Exp	83-517723	Interest - MD Debt	1,800	365	2,165	
	Clerk	Exp	16-512340	Other Contracted Services	12,000	(3,865)	8,135	
	Debt Svc	Trf-In	230-381001	Trf-In from General Fund	48,200	3,865	52,065	
	Gen Fund	Trf-Out	19-581927	Trf-Out to Debt Svc Fund	48,200	3,865	52,065	
	Strm Wtr	Exp	43-533720	Miami-Dade Debt Interest	4,500	950	5,450	
	Strm Wtr	Exp	43-538541	Education Costs	9,300	(950)	8,350	
	WS Fin	Exp	61-535542	Miami Dade Debt Principal	1,347,800	(3,500)	1,344,300	
	WS Fin	Exp	61-533720	Miami Dade Debt Interest	89,500	(1,315)	88,185	
	WS	Fund Bal	440-383010	Addition to Fund Balance	531,519	(4,815)	526,704	
							-	
							-	
							-	
							-	
							-	
							-	
							-	
							-	
							-	

Exhibit "A"

ORDINANCE NO. _____

AN ORDINANCE OF THE CITY COMMISSION OF THE CITY OF OPA-LOCKA, FLORIDA, AMENDING ARTICLE I, CHAPTER 7, SECTION 7-5 OF THE CITY OF OPA-LOCKA CODE OF ORDINANCES TO INCLUDE PROVISION FOR "CERTIFICATES OF RE-OCCUPANCY"; PROVIDING FOR REGULATIONS; PROVIDING FOR PENALTIES; PROVIDING FOR ADOPTION OF REPRESENTATIONS; REPEALING ALL ORDINANCES IN CONFLICT; PROVIDING FOR CODIFICATION; PROVIDING FOR AN EFFECTIVE DATE.

WHEREAS, it is incumbent upon the City of Opa-Locka ("City") to ensure that properties are constructed and maintained in accordance with the City's Zoning regulations and other City Codes, including but not limited to Building Code and life safety requirements; and

WHEREAS, it has been brought to the City's attention that, on several occasions, properties that are not in compliance with the City's Zoning regulations and other City Codes have been transferred to new owners without their knowledge; and

WHEREAS, the City of Opa-Locka, along with other cities across the nation, is experiencing a high foreclosure rate and at some point, these homes will be transferred to new owners; and

WHEREAS, the purpose of this Ordinance is to ensure that prior to residential properties being transferred, the City can confirm that the properties meet the current City zoning requirements and other City Codes, and

WHEREAS, staff intends to undertake an educational component prior to enforcing this Ordinance, to make the public aware of the existence of the Ordinance and its requirements; and

WHEREAS, the City is in need of Certificate of Re-Occupancy Regulations, for inclusion within the City's Code of Ordinances as a part of Article I, Chapter 7, Section 7-5.

NOW THEREFORE, BE IT ORDAINED BY THE CITY COMMISSION OF THE CITY OF OPA-LOCKA, FLORIDA, AS FOLLOWS:

SECTION 1. ADOPTION OF REPRESENTATIONS.
The foregoing Whereas Clauses are hereby ratified and confirmed as being true, and the same are hereby made a specific part of this Ordinance.

SECTION 2. AMENDING ARTICLE I, CHAPTER 7, SECTION 7-5 OF THE LAND DEVELOPMENT CODE
The City Commission of the City of Opa-Locka hereby amends the City's Code of Ordinances, ARTICLE I, CHAPTER 7, SECTION 7-5, entitled "Certificates of Re-Occupancy" to state:

Sec. 22-61. Certificates of Occupancy and Re-Occupancy

1. Certificates of Re-Occupancy

A. No building or structure, or part thereof, or premises, which are hereafter erected or altered, or land upon which a new or rehabilitated use is established, shall be occupied or used until a certificate of occupancy shall have been applied for and issued.

B. Certificates of occupancy shall not be issued until the premises have been inspected and found to comply with all requirements of the Code of the City of Opa–locka and of this Chapter, and with all other agencies when required, such as Miami-Dade County Health Department, etc.

C. A record of all certificates of occupancy issued hereunder shall be kept on file in the city.

D. All applications for certificates of occupancy shall be approved or disapproved within seven (7) days following application.

2. Certificates of Re-Occupancy

Section 1. Purpose
The Purpose of this Section is to ensure that prior to a residential property being conveyed to a new ownership, that the City can confirm that the property meets the current City zoning requirements and other City Codes, including but not limited to the Building Code and life safety requirements, that the premises is being used solely for residential purposes; and that the premises has not been unlawfully altered, in violation of the City's Zoning and other City Codes.

Section 2. Certificate of Re-Occupancy Required

Prior to the purchase, sale, conveyance, and transfer of title to any single- family, condominium, duplex, triplex townhouse dwelling unit, or apartment complex consisting of four (4) or more units, a certificate of re-occupancy must be obtained. This section shall not apply in instances where property has been transferred by virtue of a certificate of title issued after a foreclosure sale. However, prior to any re-occupancy of such foreclosed property, a certificate of re-occupancy shall be obtained. The certificate of re-occupancy, if issued, shall state that the City has inspected the dwelling and determined that the dwelling complies with the residential occupancy regulations of the zoning district and other City Codes wherein the dwelling unit is located and does not contain any uncorrected building violations.

Section 3. Application

1. It shall be unlawful for any person, firm or corporation to sell, convey, or transfer any single-family, condominium, duplex, triplex or townhouse dwelling unit, or apartment complex consisting of four (4) or more units owned by such person, firm or corporation, unless a certificate of re-occupancy has been issued by the Director of the Building & Licensing Department or his/her designee. The certificate of re-occupancy, if issued, shall state that a City Inspector has inspected the dwelling and has determined that the dwelling meets the residential occupancy regulations of the zoning district and other City Codes in which the dwelling unit is located.

2. It shall be unlawful for any person, firm or corporation to transfer or convey a single family, condominium, duplex, triplex, or townhouse dwelling unit, or apartment complex consisting of four (4) or more units owned by such person, firm or corporation, without first disclosing by written notice to the buyer, grantee, or transferee the fact that a certificate of re-occupancy is required in accordance with this Section. Such notice shall be issued on a form to be provided by the City.

3. Application for a certificate of re-occupancy shall be made by the seller or owner or the designated agent, upon a form provided by the City and the payment of an inspection fee. Said fees shall be paid by the applicant. If the dwelling must be inspected within fifteen (15) business days of receipt of the application, an expedited inspection may be requested. There shall also be a fee for expedited inspections.

4. Upon receipt of the application and fee, a City Inspector shall inspect the dwelling within thirty (30) days and, if such dwelling is found to be in conformance with the provisions of paragraph 1 above, a certificate of re-occupancy shall be issued. If the dwelling is not in conformance with such

provisions, the Director or the Director's designee shall indicate by itemized list corrective action required and the certificate of re-occupancy shall be withheld until such provisions are complied with to the reasonable satisfaction of the Director or the Director's designee.

5. In the event of acts of God, terrorism or other force majeure acts, the dates outlined herein shall be extended, and the City shall be relieved of any responsibility as a result thereof.

Section 4. Restriction on inspection

Information gained or conditions observed during any inspection conducted pursuant to the authority of this Section shall not be utilized by the Code Enforcement Officers of the City as the basis for bringing code enforcement violation proceedings other than as to the residential occupancy regulations of the zoning district in which the dwelling unit is located, and the safety violations directly addressed by the inspection made under this Section, as applicable. This shall not preclude other enforcement actions brought upon the basis of information gained or violations observed by other lawful means.

Section 5. Exemption

A certificate of re-occupancy shall not be required for the original transfer or conveyance of a newly constructed single family, duplex, triplex dwelling unit, or apartment complex to any firm, corporation, or individual, or to any transfer that represents the first transaction since the issuance of the original certificate of occupancy.

Section 6. Limitation of Liability

The issuance of a certificate of re-occupancy does not constitute any representation or warranty as to the condition of the dwelling or other structures on said premises described herein (or any aspect of such condition), and interested persons are advised and encouraged to make their own inspection of the premises to determine the condition thereof. The issuance of a certificate of re-occupancy does not prevent the City from making future findings that violations exist that were not found in any previous inspection(s).

Section 7. Payment of Outstanding Lien Amounts

No re-occupancy certificate shall be issued for any property unless the property is in compliance with any outstanding warning notices or notices of violation issued by the City and until the owner of the property has satisfied City of Opa-locka liens against the property.

Section 8. City Manager Authority
In the event of a pending real estate transaction, the City Manager shall enter into a stipulated settlement agreement for the issuance of conditional certificates of re- occupancy. Such conditional certificates shall provide for a reasonable time for compliance with any outstanding zoning or building code issues and for a fine in the event of noncompliance. Conditional certificates of re-occupancy shall not be issued where life-safety violations exist on the property. There shall be a fee for a conditional certificate of re-occupancy. The property owner to whom the property is transferred must agree to be bound by the terms of this Section and in the event the requisite remedial action does not occur within the timeframe stipulated in the conditional certificate, agrees to be subject to the penalties outlined in Paragraph 10 below.

Section 9. Warning Notices
Prior to the imposition of any lien or penalty for the failure to obtain a re-occupancy certificate, a warning notice shall be issued to the violator(s) requiring compliance within a reasonable period. In the event the requisite inspection does not occur within the time set by the City, a notice of violation shall be issued.

Section 10. Penalties
Any person convicted of a violation of this section shall be punished by a fine not to exceed Five Hundred Dollars ($500.00), or by imprisonment not to exceed sixty (60) days, or both, in the discretion of the County Court. In addition, any property for which an application for a re-occupancy inspection and certificate is not filed prior to the sale of said property shall be subject to a fine equivalent to the expedited application fee, payable at the time the late application is filed.

SECTION 3. The provisions of this Ordinance shall take effect six months after the effective date of this Ordinance. Prior to that date, City staff will undertake steps to educate City residents about the Ordinance and its implementation. Commencing six months after the effective date of this Ordinance, all affected persons or entities must comply with its provisions.

SECTION 4. CONFLICT & REPEALER.

All ordinances, parts of ordinances or code provisions in conflict herewith ordinance are hereby repealed.

SECTION 5. SEVERABILITY.

If any provision of this Ordinance or the application thereof to any person or circumstance is held invalid, such invalidity shall not affect other provisions of the Code

or applications of this Ordinance that can be given effect without the invalid provision or application, and to this end the provisions of this Ordinance are declared to be severable.

SECTION 6. INCLUSION IN CODE.

It is the intention of the City Commission of the City of Opa-Locka that the provisions of this Ordinance shall at some time in the future become and be made a part of the Code of Ordinances of the City of Opa-Locka and that the sections of this Ordinance may be renumbered or re-lettered and the word "Ordinance" may be changed to "Chapter," "Section," "Article" or such other appropriate word or phrase, the use of which shall accomplish the intentions herein expressed; provided, however, that Section 1 hereof or the provisions contemplated thereby shall not be codified.

SECTION 7. SCRIVENER'S ERRORS

Sections of this Ordinance may be renumbered or re-lettered and corrections of typographical errors which do not affect the intent may be authorized by the City Manager, following review by the City Attorney, and without need of public hearing, by filing a corrected copy of same with the City Clerk.

SECTION 8. EFFECTIVE DATE.

This Ordinance shall take effect upon the adoption of this Ordinance by the Commission of the City of Opa-Locka is subject to the approval of the Governor or Governor's Designee.

PASSED FIRST READING this ____ day of _____ 2023.

PASSED SECOND READING this ____ day of _____ 2023.

_____
John Taylor, Mayor

ATTEST:

_____
Joanna Flores, City Clerk

APPROVED AS TO FORM AND
LEGAL SUFFICIENCY:

_____
Burnadette Norris-Weeks, P.A.
City Attorney

Moved by: _____

Seconded by: _____

VOTE:

Commissioner Bass	_____ (Yes)	_____ (No)
Commissioner Kelley	_____ (Yes)	_____ (No)
Commissioner Williams	_____ (Yes)	_____ (No)
Vice Mayor Ervin	_____ (Yes)	_____ (No)
Mayor Taylor	_____ (Yes)	_____ (No)

City of Opa-locka
Agenda Cover Memo

Department Director:	Gregory D. Gay			**Department Director Signature:**			
City Manager:	Darvin E. Williams			**CM Signature**			
Commission Meeting Date:	September 27, 2023		**Item Type:** *(Enter X in box)*	**Resolution**	**Ordinance**		**Other**
					X		
Fiscal Impact: *(Enter X in box)*	**Yes**	**No**	**Resolution Reading:** *(Enter X in box)*		**1st Reading**		**2nd Reading**
					X		
		X	**Public Hearing:** *(Enter X in box)*		**Yes**	**No**	**Yes** / **No**
					X		X
Funding Source: *Account#* **:**	*(Enter Fund & Dept)* Ex: N/A See Financial Impact section below		**Advertising Requirement:** *(Enter X in box)*		**Yes**		**No**
					X		
ILA Required: *(Enter X in box)*	**Yes**	**No**	**RFP/RFQ/Bid#:**				
		X					
Strategic Plan Related *(Enter X in box)*	**Yes**	**No**	**Strategic Plan Priority Area:** **Enhance Organizational** ☐ **Bus. & Economic Dev** ■ **Public Safety** ■ **Quality of Education** ☐ **Qual. of Life & City Image** ■ **Communication** ☐		**Strategic Plan Obj./Strategy:** *(list the specific objective/strategy this item will address)*		
	X						
Sponsor Name	City Manager		**Department:** Planning & Community Development		City Manager		

Short Title:

AN ORDINANCE OF THE CITY COMMISSION OF THE CITY OF OPA-LOCKA, FLORIDA TO AMEND CHAPTER 7, OF THE OPA-LOCKA CODE OF ORDINANCES ENTITLED "BUILDING, HOUSING AND STRUCTURAL REGULATIONS" BY CREATING CHAPTER 7, SECTION 7-13, ENTITLED "CERTIFICATE OF RE-OCCUPANCY"; REQUIRING A CERTIFICATE OF RE-OCCUPANCY FOR SINGLE FAMILY RESIDENCES, DUPLEXES, CONDOMINIUM UNITS, AND TOWNHOUSES PRIOR TO ALL PROPERTY TRANSFERS; PROVIDING FOR REGULATIONS; PROVIDING FOR AN APPLICATION PROCESS; PROVIDING FOR PENALTIES; PROVIDING FOR INCORPORATION OF RECITALS; PROVIDING FOR INCLUSION IN THE CODE; PROVIDING FOR SEVERABILITY; PROVIDING FOR CONFLICT AND REPEALER; PROVIDING FOR AN EFFECTIVE DATE.

Staff Summary:

The City of Opa-locka has aging housing stock, and many property owners have over time, modified their residence. In several instances, these modifications were done withou

appropriate permits and inspections and resulted in the housing unit being out of compliance with current zoning and building requirements. Over time as these residences were sold, the new owners inherited conditions for which they were not responsible or aware. The purpose of this ordinance is to ensure that housing units are primarily in compliance with current zoning and Florida Building Code requirements and in compliance with life safety requirements, specifically as it pertains to use.

The intent of this legislation is to ensure that new homeowners in the of City of Opa Locka will know that they are purchasing a residential unit that is free from any major zoning violations, free from any Florida Building Coe violations and that the residence conforms to life safety requirements for which ultimately would become that property owner's responsibility to correct. The proposed legislation would also provide an avenue for the city to uncover and correct unlawful violations of the zoning and building code, which often involves illegal dwelling units, unpermitted additions, etc., that can become a nuisance to the surrounding community if not addressed.

Financial Impact

There is no negative financial impact from the approval of this legislation.

Proposed Action:

PCD Staff recommends approval of this code amendment.

Attachment:

Draft Ordinance
Amended City Code of Ordinance

ARTICLE IV. CERTIFICATE OF RE-OCCUPANCY

Sec. 28-221. Intent.

(a) It is incumbent upon the city to ensure that properties are constructed in accordance with the city's zoning regulations, and it has been brought to the city's attention that, on several occasions, properties that are not in compliance with the city's zoning regulations have been transferred to new owners without their knowledge.

(b) The city, along with other cities across the nation, is experiencing a high foreclosure rate and at some point these homes will be transferred to new owners.

(c) The purpose of this article is to ensure that prior to residential properties being transferred, the city is able to confirm that the properties meet the current city zoning requirements.

(d) The stated purpose and intent of this article is compliance with zoning regulations; provided, however, the city recognizes that compliance with such zoning regulations may also cause the need to comply with other city codes, including but not limited to building code and life safety requirements.

(Ord. No. 2009-04-176, § 1, 1-28-2008)

Sec. 28-222. Purpose.

The purpose of this article is to ensure that prior to a residential property being conveyed to a new ownership, that the city is able to confirm that the property meets the current city zoning requirements; that the premises are being used solely for residential purposes; and that the premises have not been unlawfully altered, in violation of the city's zoning codes.

(Ord. No. 2009-04-176, § 2(1), 1-28-2009)

Sec. 28-223. Certificate of re-occupancy required.

Prior to the purchase, sale, conveyance and transfer of title to any single-family, condominium, duplex, triplex townhouse dwelling unit, or apartment complex consisting of four or more units, a certificate of re-occupancy must be obtained. This section shall not apply in instances where property has been transferred by virtue of a certificate of title issued after a foreclosure sale. However, prior to any reoccupancy of such foreclosed property, a certificate of reoccupancy shall be obtained. The certificate of re-occupancy, if issued, shall state that the city has inspected the dwelling and determined that the dwelling complies with the residential occupancy regulations of the zoning district in which the property wherein the dwelling unit is located and does not contain any uncorrected building violations.

(Ord. No. 2009-04-176, § 2(2), 1-28-2009)

Sec. 28-224. Application.

(a) It shall be unlawful for any person, firm or corporation to, sell convey, or transfer any single-family, condominium, duplex, triplex or townhouse dwelling unit, or apartment complex consisting of four or more

units owned by such person, firm or corporation, which property has been sold, transferred or conveyed to such person, firm or corporation after the effective date of the ordinance from which this article is derived unless a certificate of re-occupancy has been issued by the director of the development services department or his/her designee. The certificate of re-occupancy, if issued, shall state that a city inspector has inspected the dwelling and has determined that the dwelling meets the residential occupancy regulations of the zoning district in which the dwelling unit is located.

(b) It shall be unlawful for any person, firm or corporation to transfer or convey a single-family, condominium, duplex, triplex, or townhouse dwelling unit, or apartment complex consisting of four or more units owned by such person, firm or corporation, without first disclosing by written notice to the buyer, grantee or transferee the fact that a certificate of re-occupancy is required in accordance with this article. Such notice shall be issued on a form to be provided by the city.

(c) Application for a certificate of re-occupancy shall be made by the seller or owner or the designated agent, upon a form provided by the city and the payment of an inspection fee to be determined by a separate resolution of the city council. Said fees shall be paid by the applicant. If dwelling must be inspected within 15 business days of receipt of the application, an expedited inspection may be requested. There shall also be a fee for expedited inspections, which shall be established by a separate resolution of the city council.

(d) Upon receipt of the application and fee, a city inspector shall inspect the dwelling within 30 days and, if such dwelling is found to be in conformance with the provisions of this section, a certificate of re-occupancy shall be issued. If the dwelling is not in conformance with such provisions, the director or the director's designee shall indicate by itemized list corrective action and the certificate of re-occupancy shall be withheld unless and until such provisions are complied with, to the reasonable satisfaction of the director or the director's designee.

(e) In the event of acts of God, terrorism or other force majeure acts, the dates outlined herein shall be extended and the city shall be relieved of any responsibility as a result thereof.

(Ord. No. 2009-04-176, § 2(3), 1-28-2009)

Sec. 28-225. Restriction on inspection.

Information gained or conditions observed in the course of any inspection conducted pursuant to the authority of this article shall not be utilized by the code enforcement officers of the city as the basis for bringing code enforcement violation proceedings other than as to the residential occupancy regulations of the zoning district in which the dwelling unit is located, and the safety violations directly addressed by the inspection made under this article, as applicable. This shall not preclude other enforcement actions brought upon the basis of information gained or violations observed by other lawful means.

(Ord. No. 2009-04-176, § 2(4), 1-28-2009)

Sec. 28-226. Exemption.

A certificate of re-occupancy shall not be required for the original transfer or conveyance of a newly constructed single-family, duplex, triplex dwelling unit, or apartment complex to any firm, corporation, or individual, or to any transfer that represents the first transaction since the issuance of the original certificate of occupancy.

(Ord. No. 2009-04-176, § 2(5), 1-28-2009)

Sec. 28-227. Limitation of liability.

The issuance of a certificate of re-occupancy does not constitute any representation or warranty as to the condition of the dwelling or other structures on said premises described herein (or any aspect of such condition), and interested persons are advised and encouraged to make their own inspection of the premises in order to determine the condition thereof. The issuance of a certificate of re-occupancy does not prevent the city from making future findings that violations exist that were not found in the any previous inspections.

(Ord. No. 2009-04-176, § 2(6), 1-28-2009)

Sec. 28-228. Payment of outstanding lien amounts.

No re-occupancy certificate shall be issued for any property unless the property is in compliance with any outstanding warning notices or notices of violation issued by the city and until the owner of the property has satisfied any and all city liens against the property.

(Ord. No. 2009-04-176, § 2(7), 1-28-2009)

Sec. 28-229. City manager authority.

In the event of a pending real estate transaction, the city manager shall enter into stipulated settlement agreements for the issuance of conditional certificates of re-occupancy. Such conditional certificates shall provide for a reasonable time for compliance with any outstanding zoning or building code issues and for a fine in the event of noncompliance. Conditional certificates of re-occupancy shall not be issued where life-safety violations exist on the property. The fee for a conditional certificate of re-occupancy shall be established by separate resolution. The property owner to whom the property is transferred must agree to be bound by the terms of this article and in the event the requisite remedial action does not occur within the timeframe stipulated in the conditional certificate, agrees to be subject to the penalties outlined in section 28-231.

(Ord. No. 2009-04-176, § 2(8), 1-28-2009)

Sec. 28-230. Warning notices.

Prior to the imposition of any lien or penalty for the failure to obtain a reoccupancy certificate, a warning notice shall be issued to the violator requiring compliance within a reasonable period of time. In the event the requisite inspection does not occur within the time set by the city, a notice of violation shall be issued.

(Ord. No. 2009-04-176, § 2(9), 1-28-2009)

Sec. 28-231. Penalties.

Any person convicted of a violation of this article shall be punished by a fine not to exceed $500.00, or by imprisonment not to exceed 60 days, or both, in the discretion of the county court. In addition, any property for which an application for re-occupancy inspection and certificate is not filed prior to the sale of said property shall be subject to a fine equivalent to the expedited application fee, payable at the time the late application is filed.

(Ord. No. 2009-04-176, § 2(10), 1-28-2009)

Secs. 28-232—28-255. Reserved.