CITY OF OPA-LOCKA

The City of Bright Opportunities

REGULAR COMMISSION MEETING
Agenda

Wednesday, December 11, 2024
7:00 PM

Commission Chamber
780 Fisherman Street, 3rd Floor
Opa-locka, FL 33054

City Commission
Mayor John H. Taylor, Jr.
Vice Mayor Joseph L. Kelley
Commissioner Sherelean Bass
Commissioner Natasha L. Ervin
Commissioner Luis B. Santiago

Appointed Officials
Interim City Manager Sha'mecca Lawson
City Attorney Burnadette Norris-Weeks
City Clerk Joanna Flores, CMC

SPEAKING BEFORE THE CITY COMMISSION

NOTE: All persons speaking shall come forward and give your full name and address, and the name and address of the organization you are representing.

There is a three (3) minute time limit for speaker/citizens forum and participation at all city commission meetings and public hearings. Your cooperation is appreciated in observing the three (3) minute time limit policy. If your matter requires more than three (3) minutes, please arrange a meeting or an appointment with the City Clerk prior to the commission meeting. City of Opa-locka Code of Ordinances Section 2-57

DECORUM POLICY

Any person making impertinent or slanderous remarks or who become boisterous while addressing the commission, shall be declared to be out of order by the presiding officer, and shall be barred from further audience before the Commission by the presiding officer, unless permission to continue or again address the commission be granted by the majority vote of the commission members. City of Opa-locka Code of Ordinances Section 2-58

NOTICE TO ALL LOBBYISTS

Any person appearing in a paid or remunerated representative capacity before the city staff, boards, committees and the City Commission is required to register with the City Clerk before engaging in lobbying activities. *City of Opa-locka Code of Ordinances Section 2-18*

FLORIDA STATUTES, CHAPTER 285.0105

"If a person decides to appeal any decision made by the Board, Agency or Commission with respect to the proceedings, and that, for such purpose, that person may need to ensure that a verbatim record of the proceedings is made, which record includes the testimony and evidence upon which the appeal is to be based."

PROCEDURES FOR PUBLIC PARTICIPATION

How to watch the meeting

Members of the public can watch public meetings and public hearings at https://www.youtube.com/user/CityofOpaLocka

City Commission Meetings are held in-person while allowing virtual participation. Members of the public wishing to address the Commission may do so in person or virtually.

To participate virtually, please register by 7:00 p.m. on the scheduled meeting date via the City of Opa-locka website at www.opalockafl.gov.

CITY OF OPA-LOCKA

"The City of Bright Opportunities"

AGENDA
REGULAR COMMISSION MEETING
December 11, 2024
7:00 PM

1. CALL TO ORDER:

2. ROLL CALL:

3. INVOCATION:

4. PLEDGE OF ALLEGIANCE:

5. AWARDS/PROCLAMATIONS/ACKNOWLEDGMENTS:

6. APPROVAL OF CONSENT AGENDA AND PULL LIST (deferrals and deletions)

7. APPROVAL OF AGENDA:

8. APPROVAL OF MINUTES:

Regular Commission Meeting Minutes - November 13, 2024

Special Commission Meeting Minutes - November 20, 2024

9. DISTRICT ONE / DISTRICT TWO - COUNTY COMMISSIONER REPORT:

10. PUBLIC PRESENTATIONS:

Jesus Fuentes, PE, Senior Project Manager
EXP US Services
ref: SS4A Vision Zero countermeasures and improvement recommendations

11. CITIZENS' FORUM:
(Opportunity for discussion of any concerns – please limit to 3 minutes)

12. ACTION ITEMS (items from consent agenda pull list):

13. ADMINISTRATION:

CONSENT AGENDA:

1. **A RESOLUTION OF THE CITY COMMISSION OF THE CITY OF OPA-LOCKA, FLORIDA, AUTHORIZING AN EXTENSION OF THE AGREEMENT WITH THE EMPLOYEE RELATIONS GROUP LLC TO SERVE AS THE CITY'S OUTSIDE ENTITY HUMAN RESOURCES DIRECTOR; PROVIDING FOR INCORPORATION OF RECITALS; PROVIDING FOR AN EFFECTIVE DATE.** *Sponsored by Interim City Manager*

2. **A RESOLUTION OF THE CITY COMMISSION OF THE CITY OF OPA-LOCKA, FLORIDA, AUTHORIZING THE INTERIM CITY MANAGER TO ENTER INTO AND EXECUTE A VOLUNTARY COOPERATION AND OPERATIONAL ASSISTANCE MUTUAL AID AGREEMENT BETWEEN THE CITY OF OPA-LOCKA, FLORIDA AND THE BAY HARBOR ISLANDS POLICE DEPARTMENT, ATTACHED HERETO AS EXHIBIT "A", FOR LAW ENFORCEMENT SERVICES AND RESOURCES; PROVIDING FOR INCORPORATION OF RECITALS; PROVIDING FOR AN EFFECTIVE DATE.** *Sponsored by Interim City Manager*

3. **A RESOLUTION OF THE CITY COMMISSION OF THE CITY OF OPA-LOCKA, FLORIDA, AUTHORIZING THE INTERIM CITY MANAGER TO AMEND THE AGREEMENT WITH TYLER TECHNOLOGIES, INC. FOR THE INSTALLATION AND SUPPORT OF THE ENTERPRISE RESOURCE PLANNING (ERP) SYSTEM; PROVIDING FOR INCORPORATION OF RECITALS; PROVIDING FOR AN EFFECTIVE DATE.** *Sponsored by Interim City Manager*

4. **A RESOLUTION OF THE CITY COMMISSION OF THE CITY OF OPA- LOCKA, FLORIDA, AUTHORIZING AN AMENDMENT TO THE AGREEMENT WITH BEEFREE, LLC D/B/A FREEBEE FOR ON-DEMAND AND FIXED-ROUTE RIDESHARE SERVICES WITHIN THE CITY, IN THE FORM ATTACHED HERETO; PROVIDING FOR ADOPTION OF REPRESENTATIONS; PROVIDING FOR AN EFFECTIVE DATE.** *Sponsored by Interim City Manager*

5. **A RESOLUTION OF THE CITY COMMISSION OF THE CITY OF OPA-LOCKA, FLORIDA, ADOPTING THE CITY OF OPA-LOCKA'S 2025 LEGISLATIVE PRIORITY LIST, ATTACHED HERETO AS COMPOSITE EXHIBIT "A"; AUTHORIZING THE CITY MANAGER TO TAKE NECESSARY ACTION TO CARRY OUT THE AIMS OF THIS RESOLUTION; PROVIDING FOR ADOPTION OF REPRESENTATIONS; PROVIDING FOR AN EFFECTIVE DATE.** *Sponsored by Interim City Manager*

6. **A RESOLUTION OF THE CITY COMMISSION OF THE CITY OF OPA-LOCKA, FLORIDA, RATIFYING A GRANT APPLICATION FOR THE TRANSPORTATION ALTERNATIVES PROGRAM 2025 FUNDED BY THE FLORIDA DEPARTMENT OF TRANSPORTATION (DISTRICT 6); PROVIDING FOR INCORPORATION OF RECITALS; PROVIDING FOR AN EFFECTIVE DATE.** *Sponsored by Interim City Manager*

7. **A RESOLUTION OF THE CITY COMMISSION OF THE CITY OF OPA-LOCKA, FLORIDA AUTHORIZING THE INTERIM CITY MANAGER TO ENTER INTO AN AGREEMENT WITH ARTPAD INC FOR ARTISTIC SERVICES; PROVIDING FOR INCORPORATION OF RECITALS; PROVIDING FOR AN EFFECTIVE DATE.** *Sponsored by Interim City Manager*

8. **A RESOLUTION OF THE CITY COMMISSION OF THE CITY OF OPA-LOCKA, FLORIDA, AUTHORIZING THE INTERIM CITY MANAGER TO ENTER INTO AN EMERGENCY AGREEMENT WITH DIAMANTI CONSTRUCTION & DEVELOPMENT, INC. TO COMPLETE ALL REMAINING CONSTRUCTION RELATED TO HISTORIC CITY HALL; PROVIDING ADOPTION OF REPRESENTATIONS; PROVIDING FOR AN EFFECTIVE DATE.** *Sponsored by Interim City Manager*

9. **A RESOLUTION OF THE CITY COMMISSION OF THE CITY OF OPA-LOCKA, FLORIDA, AUTHORIZING THE CITY MANAGER TO EXECUTE AN AGREEMENT WITH SOLE SOURCE PROVIDER WASTEWATER ACQUISITION LLC D/B/A IN-PIPE TECHNOLOGY, INC TO CONTINUE THE PROGRAM TO ELIMINATE FATS, OIL, AND GREASE (FOG) IN THE CITY'S SANITARY SEWER SYSTEM; PROVIDING FOR INCORPORATION OF RECITALS; PROVIDING FOR AN EFFECTIVE DATE.** *Sponsored by Interim City Manager*

10. **A RESOLUTION OF THE CITY COMMISSION OF THE CITY OF OPA-LOCKA, FLORIDA, AUTHORIZING THE INTERIM CITY MANAGER TO ENTER INTO A SOLE SOURCE CONTRACT WITH WASTEWATER ACQUISITION LLC D/B/A IN-PIPE TECHNOLOGY, INC, IN AN AMOUNT NOT TO EXCEED TWENTY-FIVE THOUSAND DOLLARS ($25,000.00), FOR THE DIRECT PURCHASE OF AN AOP-16 LIFT STATION ODOR CONTROL UNIT FOR PUMP STATION NO. 2 WITHIN THE CITY; PROVIDING FOR INCORPORATION OF RECITALS; PROVIDING FOR AN EFFECTIVE DATE.** *Sponsored by Interim City Manager*

11. **A RESOLUTION OF THE CITY COMMISSION OF THE CITY OF OPA-LOCKA, FLORIDA, AUTHORIZING THE INTERIM CITY MANAGER TO PIGGYBACK SOURCEWELL CONTRACT #120721-RVL WITH JET-VAC EQUIPMENT COMPANY, LLC FOR UNDERGROUND INFRASTRUCTURE INSPECTION AND REHABILITATION EQUIPMENT WITH RELATED SERVICES (SOURCEWELL RFP #120721), AND ENTER INTO AN AGREEMENT WITH JET-VAC EQUIPMENT COMPANY, LLC FOR THE PURCHASE OF A TRAILER MOUNTED SEWER SYSTEM CCTV INSPECTION UNIT, IN AN AMOUNT NOT TO EXCEED NINETY-SIX THOUSAND NINE HUNDRED EIGHTY-ONE DOLLARS AND SEVENTY-SIX CENTS ($96,981.76); PROVIDING FOR INCORPORATION OF RECITALS; PROVIDING FOR AN EFFECTIVE DATE.** *Sponsored by Interim City Manager*

12. **A RESOLUTION OF THE CITY COMMISSION OF THE CITY OF OPA-LOCKA, FLORIDA, AUTHORIZING THE CITY MANAGER TO PIGGYBACK THE CITY OF LARGO CONTRACT WITH BLD SERVICES LLC FOR QUALIFIED**

PROFESSIONAL SERVICES FOR TRENCHLESS SANITARY AND STORM SEWER REHABILITATION (CITY OF LARGO ITB #24-B-806, AND ENTER INTO AN AGREEMENT WITH BLD SERVICES LLC FOR SEWER SYSTEM REPAIR SERVICES, IN AN AMOUNT NOT TO EXCEED EIGHTY THOUSAND, SIX HUNDRED SIXTY-FIVE DOLLARS ($80,665.00); PROVIDING FOR INCORPORATION OF RECITALS; PROVIDING FOR AN EFFECTIVE DATE. *Sponsored by Interim City Manager*

13. **A RESOLUTION OF THE CITY COMMISSION OF THE CITY OF OPA-LOCKA, FLORIDA, AUTHORIZING THE INTERIM CITY MANAGER TO ENTER INTO AN AGREEMENT WITH SSN ENGINEERING, LLC FOR SANITARY SEWER COLLECTION SYSTEM HYDRAULIC MODELING SERVICES, PURSUANT TO RFQ NO. 24-1011200, ATTACHED HERETO, IN AN AMOUNT NOT TO EXCEED ONE HUNDRED TWENTY-FOUR THOUSAND DOLLARS ($124,000.00); PROVIDING FOR INCORPORATION OF RECITALS; PROVIDING FOR AN EFFECTIVE DATE.** *Sponsored by Interim City Manager*

14. **A RESOLUTION OF THE CITY COMMISSION OF THE CITY OF OPA-LOCKA, FLORIDA, APPROVING THE RECOMMENDATION OF THE HISTORIC ENVIRONMENTAL PRESERVATION BOARD TO ISSUE A SPECIAL CERTIFICATE OF APPROPRIATENESS FOR THE STRUCTURE AT 806 JANN AVENUE TO ALLOW FOR THE INSTALLATION OF A PHOTOVOLTAIC SOLAR SYSTEM ON THE ROOF OF THIS REGISTERED HISTORIC PROPERTY; PROVIDING FOR AN EFFECTIVE DATE.** *Sponsored by Interim City Manager*

15. **A RESOLUTION OF THE CITY COMMISSION OF THE CITY OF OPA-LOCKA, FLORIDA, APPROVING THE RECOMMENDATION OF THE HISTORIC ENVIRONMENTAL PRESERVATION BOARD TO ISSUE A CERTIFICATE OF APPROPRIATENESS FOR THE STRUCTURE AT 1141 JANN AVENUE TO CONDUCT FULL ROOF REPLACEMENT ON THIS REGISTERED HISTORIC PROPERTY; PROVIDING FOR AN EFFECTIVE DATE.** *Sponsored by Interim City Manager*

16. **A RESOLUTION OF THE CITY COMMISSION OF THE CITY OF OPA-LOCKA, FLORIDA, APPROVING THE RECOMMENDATION OF THE HISTORIC ENVIRONMENTAL PRESERVATION BOARD TO ISSUE A CERTIFICATE OF APPROPRIATENESS FOR THE STRUCTURE AT 1301 SHARAR AVENUE FOR THE REPLACEMENT OF TEN WINDOWS AND TWO DOORS OF THIS REGISTERED HISTORIC PROPERTY; PROVIDING FOR AN EFFECTIVE DATE**. *Sponsored by Interim City Manager*

14. NEW ITEMS:

15. PLANNING & ZONING:

A. PUBLIC HEARINGS:

B. APPEALS:

16. ORDINANCES/RESOLUTIONS/PUBLIC HEARINGS:

A. FIRST READING ORDINANCE(S)/PUBLIC HEARING(S):

1. **AN ORDINANCE OF THE CITY COMMISSION OF THE CITY OF OPALOCKA, FLORIDA, AUTHORIZING THE INTERIM CITY MANAGER TO EXECUTE A LEASE AGREEMENT WITH SFSE LLC d/b/a SOUTH FLORIDA SCHOOL OF EXCELLENCE TO OCCUPY RENTAL SPACE AT 780 FISHERMAN STREET; PROVIDING FOR ADOPTION OF REPRESENTATIONS; PROVIDING FOR CONFLICT AND REPEALER; PROVIDING FOR SEVERABILITY; PROVIDING FOR SCRIVERNER'S ERRORS; CONFLICTS OF LAW, SEVERABILITY; AND PROVIDING FOR AN EFFECTIVE DATE.** *Sponsored by Interim City Manager*

B. SECOND READING ORDINANCE(S)/PUBLIC HEARING(S):

C. RESOLUTION(S):

17. CITY MANAGER'S REPORT:

18. OFFICIAL BOARD REPORTS:

19. MAYOR/COMMISSION REPORTS:

20. OFFICIAL BOARD APPOINTMENTS:

Charter Review Board
1 Individual appointment (Commissioner Bass)
1 Individual appointment (Commissioner Santiago)
1 individual appointment (Vice Mayor Kelley)
2 at-large appointments

Civil Service Board
1 individual appointment (Commissioner Bass)
1 individual appointment (Commissioner Santiago)
1 Individual appointment (Vice Mayor Kelley)

Community Relations, Recreation and Activities Advisory Board
1 Individual appointment (Commissioner Santiago)
1 Individual appointment (Vice Mayor Kelley)
1 Individual appointment (Mayor Taylor)
1 At-large appointment

Historic Environmental Preservation Board
4 at-large appointments

Local Financial Oversight Board
2 at-large appointment

Teen & Young Adult Advisory Board
1 individual appointment (Commissioner Bass)
1 individual appointment (Commissioner Santiago)
1 individual appointment (Vice Mayor Kelley)

21. ADJOURNMENT:

SCHEDULE OF FUTURE WORKSHOPS/OFFICIAL ACTIVITIES

1. **The City of Opa-locka Mayor & Commission presents Meet Me Monday hosted by Vice Mayor Joseph L. Kelley, Monday, December 9, 2024, at 6:00 PM, Helen L. Miller Center, 2331 NW 143rd Street, Opa-locka, Florida.**

2. **Opa-locka Community Redevelopment Agency Meeting, Tuesday, December 10, 2024 at 6:00 PM, Opa-locka Government Center, Commission Chambers, 780 Fisherman Street, 3rd Floor, Opa-locka, Florida.**

3. **The City of Opa-locka Mayor & Commission presents Bingo, Friday, December 13, 2024 at 6:00 PM, Sherbondy Village Auditorium, 215 Perviz Avenue, Opa-locka, Florida. Free admission, great prizes, free food and great time. For more information, please call 305.953.2868 Ext. 1105.**

4. **City of Opa-locka Mayor & Commission presents Light Up Opa-locka Home Holiday Lights Contest hosted by Vice Mayor Joseph L. Kelley. Prizes will be awarded to the top 3 homes. Winners will be selected by December 21, 2024. Register by Friday, December 20, 2024 by calling 305.953.2868 Ext. 1105.**

5. **The City of Opa-locka Mayor & Commission invite you to Holiday In the Park Toy Give Away, Friday, December 21, 2024 from 11:00 am - 4:00 pm, Sherbondy Village Auditorium, 215 Perviz Avenue, Opa-locka, Florida. Pre-registration required, please call 305.953.2875 for more information.**

For further information, please contact the Office of the City Clerk by telephone at (305) 953-2800 or email jflores@opalockafl.gov.

CITY OF OPA-LOCKA

"The City of Bright Opportunities"

REGULAR COMMISSION MEETING
Wednesday, November 13, 2024
7:00 PM

1. CALL TO ORDER:

Mayor John H. Taylor, Jr. called the meeting to order at 7:05 PM on Wednesday, November 13, 2024, at the City of Opa-locka Government Center, 780 Fisherman Street, Opa-locka, Florida.

2. ROLL CALL:

The following members of the City Commission were present: Vice Mayor Natasha L. Ervin (arrived at 7:20 p.m.), Commissioner Joseph L. Kelley, Commissioner Dr. Sherelean Bass, Commissioner Veronica Williams, and Mayor John H. Taylor, Jr. Also, in attendance were: Interim City Manager Sha'mecca Lawson; Assistant City Manager George Ellis; Assistant City Attorney Candice Cobb; Assistant City Clerk Floralba Valdes-Wright; City Clerk Joanna Flores.

3. INVOCATION:

The invocation was delivered by Commissioner Williams.

4. PLEDGE OF ALLEGIANCE:

The pledge of allegiance was recited in unison.

5. AWARDS/PROCLAMATIONS/ACKNOWLEDGMENTS:

There were none.

6. APPROVAL OF CONSENT AGENDA AND PULL LIST (deferrals and deletions)

It was moved by Commissioner Kelley, seconded by Commissioner Williams to approve the Consent Agenda, as presented.

There being no additional discussion, the motion to approve the Consent Agenda passed by a 4-0 vote.

Commissioner Bass Yes
Commissioner Kelley Yes
Commissioner Williams Yes
Mayor Taylor Yes

7. APPROVAL OF AGENDA:

It was moved by Commissioner Bass, seconded by Commissioner Kelley, to approve the agenda.

There being no additional discussion, the motion to approve the agenda passed by a 4-0 vote.

Commissioner Bass Yes
Commissioner Kelley Yes
Commissioner Williams Yes
Mayor Taylor Yes

8. APPROVAL OF MINUTES:

Special Commission Meeting Minutes - October 16, 2024
Regular Commission Meeting Minutes- October 23, 2024

It was moved by Commissioner Kelley, seconded by Commissioner Williams, to the Special Commission Meeting Minutes of October 16, 2024 and the Regular Commission Meeting Minutes of October 23, 2024.

There being no additional discussion, the motion to approve the minutes passed by a 4-0 vote.

Commissioner Bass Yes
Commissioner Kelley Yes
Commissioner Williams Yes
Mayor Taylor Yes

9. DISTRICT ONE / DISTRICT TWO - COUNTY COMMISSIONER REPORT:

There were no reports.

10. PUBLIC PRESENTATIONS:

Javier A. Betancourt, Executive Director
Citizens' Independent Transportation Trust
Ref: Status of People's Transportation Plan (PTP) and Strategic Miami Area Rapid Transit (SMART) Plan

Ms. Mariana Price, on behalf of Mr. Betancourt from Citizens' Independent Transportation Trust, introduced herself and Karla Damian to the City Commission. Ms. Damian presented the following: Overview of the Transportation Trust; Transportation Trust Members; Trust Membership; FY 2024 Organizational Chart; Auditing the Use of Surtax Funds; 2002-2023 $4.8 Billion Actual Surtax Expenditures; FY 2024 Surtax Budget; 40 Year Pro-Forma $8 Billion Program; and People’s Transportation Plan.

Ms. Price reviewed the Municipal Transit Program and City of Opa-locka funds received.

Ms. Damian continued the presentation and reviewed the following: Major Roadway, Highway & Neighborhood Improvements; Advanced Traffic Management System (ATMS); Transit Services Funded by the Half-Penny Surtax; Enhanced Bus Fleet; MIA Metrorail Station; Smart Plan/Program; Beach Corridor (FKA Baylink); East-West Corridor; Kendall Corridor; Northeast Corridor; North Corridor; Park-and-Ride Facilities; Funding Lasagna; Additional Areas of Focus; CIIT Ambassador Program: and Mobility Matters Podcast.

Mayor Taylor asked how funds are determined, and Ms. Price explained that it's based on a pro-rata system, considering the funds collected and the municipality's population. Mayor Taylor also asked about Opa-locka's reimbursement basis, which Ms. Price clarified is due to past audits, and efforts are underway to resolve it. Regarding the north corridor project, Ms. Price noted they may need to follow up. Mayor Taylor inquired about connecting Opa-locka's "Seniors on the Move" program with the Golden Passport program, and Ms. Price agreed to facilitate the connection via email.

Commissioner Kelley thanked Ms. Price and invited her to his monthly "Meet Me Monday" meetings. He asked about Opa-locka's audit, and Ms. Price confirmed it would begin soon. The Commissioner inquired about any delays in city-funded projects in Opa-locka, and Ms. Price clarified there were none. He raised concerns about traffic signal synchronization in Opa-locka and requested feedback. Regarding red light cameras, Ms. Price confirmed they fall outside her jurisdiction. Lastly, Commissioner Kelley asked the City Manager to explore updated street calming devices.

Ms. Price mentioned that Mr. Betancourt would like to give presentations not only at commission meetings but also at other community meetings, if possible.

Vice Mayor Ervin joined the meeting.

Mayor Taylor presented a recognition to Commissioner Williams for her dedicated service and invaluable contributions to the city of Opa-locka, acknowledging her historic achievement of serving as Commissioner, Vice Mayor, and Mayor within one term. Mayor Taylor expressed their appreciation and noted that Commissioner Williams would be greatly missed.

Commissioner Williams thanked her colleagues and city employees for their support during her four years in office and expressed her excitement for the future of Opa-locka.

11. CITIZENS' FORUM:

City Clerk Flores announced the protocol for public participation at City Commission meetings.

Mayor Taylor opened the Citizens' Forum.

City Clerk Flores stated there were no virtual public comments.

Mr. Brian Dennis, 2140 York Street, congratulated Commissioner Williams for her successful term and praised her contributions. He supported the resolution to close unauthorized city banking accounts, highlighting the importance of transparency. He also commended Vice Mayor Ervin's suggestion for the Commission to review all bank statements. Mr. Dennis expressed he would miss Commissioner Williams' efforts and wished her success in the future.

Mayor Taylor closed the Citizens' Forum.

12. ACTION ITEMS (items from consent agenda pull list):

There were none.

13. ADMINISTRATION:

CONSENT AGENDA:

1. **A RESOLUTION OF THE CITY COMMISSION OF THE CITY OF OPA-LOCKA, FLORIDA, AUTHORIZING THE CANCELLATION OF THE CITY'S REGULAR SCHEDULED CITY COMMISSION MEETINGS SET FOR NOVEMBER 27, 2024 AND DECEMBER 25, 2024; PROVIDING FOR INCORPORATION OF RECITALS; PROVIDING FOR AN EFFECTIVE DATE.** *Sponsored by Mayor Taylor*

2. **A RESOLUTION OF THE CITY COMMISSION OF THE CITY OF OPA-LOCKA, FLORIDA, AUTHORIZING THE INTERIM CITY MANAGER TO CLOSE ALL UNAUTHORIZED CITY BANKING ACCOUNTS ESTABLISHED AT POPULAR BANK; PROVIDING FOR INCORPORATION OF RECITALS; PROVIDING FOR AN EFFECTIVE DATE.** *Sponsored by Interim City Manager*

3. **A RESOLUTION OF THE CITY COMMISSION OF THE CITY OF OPA-LOCKA, FLORIDA, RATIFYING AN EMERGENCY PURCHASE OF THE INTERIM CITY MANAGER FOR PAYMENT OF THIRTY-EIGHT THOUSAND, FIVE HUNDRED NINE DOLLARS ($38,509.00) TO RANGELINE TAPPING SERVICES INC. FOR SESAME STREET WATERMAIN LINE STOP EMERGENCY SERVICES PROVIDED DUE TO LEAKAGE DISCOVERED DURING CONSTRUCTION; PROVIDING FOR INCORPORATION OF RECITALS; PROVIDING FOR AN EFFECTIVE DATE.** *Sponsored by Interim City Manager*

4. **A RESOLUTION OF THE CITY COMMISSION OF THE CITY OF OPA-LOCKA, FLORIDA, AUTHORIZING THE INTERIM CITY MANAGER TO PIGGYBACK OSCEOLA COUNTY SCHOOL DISTRICT CONTRACT #SDOC-24-B-094-ML WITH LEGACY CONSTRUCTION SERVICES**

GROUP INC. D/B/A PRO PLAYGROUNDS FOR PLAYGROUND EQUIPMENT, SURFACING, INSTALLATION & REPAIR SERVICES (OSCEOLA COUNTY SCHOOL DISTRICT ITB #SDOC-24-B-094-ML), AND ENTER INTO AN AGREEMENT WITH LEGACY CONSTRUCTION SERVICES GROUP INC., D/B/A PRO PLAYGROUNDS FOR PLAYGROUND EQUIPMENT REPLACEMENT SERVICES, IN AN AMOUNT NOT TO EXCEED TWO HUNDRED NINE THOUSAND NINE HUNDRED NINETY-NINE DOLLARS ($209,999.00); PROVIDING FOR INCORPORATION OF RECITALS; PROVIDING FOR AN EFFECTIVE DATE. *Sponsored by Interim City Manager*

5. **A RESOLUTION OF THE CITY COMMISSION OF THE CITY OF OPA-LOCKA, FLORIDA, AUTHORIZING THE INTERIM CITY MANAGER TO ACCEPT GRANT FUNDING FROM THE US DEPARTMENT OF JUSTICE, OFFICE OF COMMUNITY ORIENTED POLICING SERVICES (COPS) FOR TWO HUNDRED FIFTY THOUSAND DOLLARS ($250,000.00) FOR THE HIRING OF TWO POLICE OFFICERS AND TO EXECUTE THE CORRESPONDING AWARD ACCEPTANCE; PROVIDING FOR INCORPORATION OF RECITALS; PROVIDING FOR AN EFFECTIVE DATE.** *Sponsored by Interim City Manager*

6. **A RESOLUTION OF THE CITY COMMISSION OF THE CITY OF OPA-LOCKA, FLORIDA, AUTHORIZING THE INTERIM CITY MANAGER TO ACCEPT THE CONVEYANCE OF THE WATER DISTRIBUTION SYSTEM AT BRIDGE POINT GRATIGNY INDUSTRIAL PARK, 4700 NW 135TH STREET, WITHIN THE CITY, FROM THE DEVELOPER, ATLANTIC ENVIRONMENTAL SYSTEMS, INC. AND ENTER INTO AN AGREEMENT WITH DEVELOPER, ATTACHED HERETO AS EXHIBIT "A", FOR SAME; PROVIDING FOR INCORPORATION OF RECITALS; PROVIDING FOR AN EFFECTIVE DATE.** *Sponsored by Interim City Manager*

7. **A RESOLUTION OF THE CITY COMMISSION OF THE CITY OF OPA-LOCKA, FLORIDA, AUTHORIZING THE INTERIM CITY MANAGER TO ACCEPT THE CONVEYANCE OF THE WATER DISTRIBUTION SYSTEM AND GRAVITY COLLECTION SYSTEM AT THE SELF-STORAGE FACILITY, LOCATED AT 12940 NW 27TH AVE, WITHIN THE CITY, FROM THE DEVELOPER, HAHN CONSTRUCTION ENGINEERING CONTRACTORS, INC. AND ENTER INTO AN AGREEMENT WITH DEVELOPER, ATTACHED HERETO AS EXHIBIT "A", FOR SAME; PROVIDING FOR INCORPORATION OF RECITALS;**

PROVIDING FOR AN EFFECTIVE DATE. *Sponsored by Interim City Manager*

8. **A RESOLUTION OF THE CITY COMMISSION OF THE CITY OF OPA-LOCKA, FLORIDA, AUTHORIZING THE INTERIM CITY MANAGER TO ENTER INTO AN AGREEMENT WITH HYDRA SERVICE, INC., IN AN AMOUNT NOT TO EXCEED FIFTY THOUSAND, TWO HUNDRED SIXTY-THREE DOLLARS AND SIXTY-EIGHT CENTS ($50,263.68), FOR THE REPAIR OF ABS PUMPS NO.1 AND NO.2 FOR PUMP STATION #11C, WITHIN THE CITY; PROVIDING FOR INCORPORATION OF RECITALS; PROVIDING FOR AN EFFECTIVE DATE.** *Sponsored by Interim City Manager*

* **Please note that the above items were approved under the Agenda Item 6 – Approval of Consent Agenda and Pull List.**

14. NEW ITEMS:

There were none.

15. PLANNING & ZONING:

A. PUBLIC HEARINGS:

1. **A RESOLUTION OF THE CITY COMMISSION OF THE CITY OF OPA-LOCKA, FLORIDA, PROVIDING FOR THE APPROVAL OF THE TENTATIVE PLAT FOR THE PROPERTY LOCATED AT 921 SUPERIOR STREET AND IDENTIFIED BY FOLIO 08-2121-007-1770, IN THE R-1 ZONING DISTRICT, DIVIDING THE PROPERTY INTO THREE SEPARATE PARCELS FOR THE DEVELOPMENT OF TWO ADDITIONAL SINGLE FAMILY HOMES; PROVIDING FOR AN EFFECTIVE DATE.** ***Sponsored by Interim City Manager***

The above resolution was read by Assistant City Attorney Candice Cobb.

Interim City Manager Sha'mecca Lawson introduced the item and provided a brief background.

It was moved by Commissioner Williams, seconded by Vice Mayor Ervin , to discuss Agenda Item 15-A.1.

Mayor Taylor opened the public hearing. No one came forth to speak. Mayor Taylor closed the public hearing.

Commissioner Bass asked for clarification, and Mr. Gregory Gay replied that the property in question is not near Family Dollar, but instead located off Superior Street, south of Opa-locka Boulevard. He explained that it is about two houses in from the street, with an additional property of approximately 818 to 1,000 square feet, which is being considered for subdivision to build two more homes.

Commissioner Kelley expressed concerns about the possibility of the existing structure being torn down and replaced with three homes instead of two. Mr. Gay confirmed that if three homes were built, the project would not return to the commission, as it would proceed through an administrative process. Commissioner Kelley raised concerns about losing oversight but acknowledged that the project would still require two parking spots for each subdivision. He stated he would support the proposal despite these concerns.

Mayor Taylor expressed concern about the possibility of tearing down the existing structure. Mr. Gay explained that if three buildings were built or modifications were needed, it would return to the Commission. Otherwise, it could proceed administratively without further review. Mayor Taylor emphasized his concern about it becoming a development rather than just a subdivision.

Commissioner Kelley expressed concern that the property was initially thought to be historic, which would have required a separate process for demolition. After confirming that it was not historic, he acknowledged that the project would go through an administrative process but reiterated his concerns and emphasized that the commission's concerns about the development were understood.

There being no additional discussion, the motion to approve the resolution passed by a 5-0 vote.

Vice Mayor Ervin Yes
Commissioner Bass Yes
Commissioner Kelley Yes
Commissioner Williams Yes
Mayor Taylor Yes

2. A RESOLUTION OF THE CITY COMMISSION OF THE CITY OF OPA-LOCKA, FLORIDA, PROVIDING FOR THE APPROVAL OF THE SPECIAL EXCEPTION REQUEST FOR THE CONSTRUCTION OF A TWIN HOME BUILDING LOCATED AT 211 AHMAD STREET AND IDENTIFIED BY FOLIO 08-2121-002-2590 IN THE SINGLE FAMILY RESIDENTIAL (R-1) ZONING DISTRICT; PROVIDING FOR AN EFFECTIVE DATE. ***Sponsored by Interim City Manager***

The above resolution was read by Assistant City Attorney Candice Cobb.

Interim City Manager Sha'mecca Lawson introduced the item and provided a brief background.

It was moved by Vice Mayor Ervin, seconded by Commissioner Williams, to discuss Agenda Item 15-A.2.

Mayor Taylor opened the public hearing. No one came forth to speak. Mayor Taylor closed the public hearing.

Commissioner Bass asked if a twin home was the same as a duplex, to which Mr. Gay confirmed that they are considered the same and used interchangeably.

Commissioner Kelley expressed concerns about granting a special exception, fearing it could encourage more multi-family developments in a single-family zoned area. He also raised issues with parking, noting that duplexes and triplexes often do not provide enough spaces, leading to overcrowding.

Commissioner Bass acknowledged Commissioner Kelley's concerns about the special exception, the potential for more multi-family developments in single-family zones, and the parking challenges posed by duplexes and triplexes.

Commissioner Bass asked about the number of bedrooms in the twin homes, as it would impact parking. Mr. Gay confirmed that each unit would be a three-bedroom, two-bath home, with two required parking spaces based on the unit size.

Commissioner Williams raised concerns about the notification process, questioning whether a door-to-door approach would be better. She expressed discomfort with approving the project, fearing it could lead to parking issues and set a precedent for future multi-family developments in single-family areas.

Mr. Gay explained that the mail notification process, which is standard in all municipalities, notifies adjacent property owners within a 500-foot radius. Staff does not conduct door-to-door outreach; instead, property owners have the option to respond if they wish.

There being no additional discussion, the motion to approve the resolution failed by a 5-0 vote.

Vice Mayor Ervin No
Commissioner Bass No
Commissioner Kelley No
Commissioner Williams No
Mayor Taylor No

B. APPEALS:

There were none.

16. ORDINANCES/RESOLUTIONS/PUBLIC HEARINGS:

A. FIRST READING ORDINANCE(S)/PUBLIC HEARING(S):

1. **AN ORDINANCE OF THE CITY COMMISSION OF THE CITY OF OPA-LOCKA, FLORIDA, AMENDING THE ANNUAL ADOPTED GENERAL, PROPRIETARY AND SPECIAL REVENUE FUNDS BUDGETS FOR THE FISCAL YEAR COMMENCING OCTOBER 1, 2024 AND ENDING SEPTEMBER 30, 2025, ADJUSTING REVENUES AND EXPENDITURES AS REFLECTED IN EXHIBIT "A"; PROVIDING FOR THE EXPENDITURE OF FUNDS ESTABLISHED BY THE BUDGET; AUTHORIZING THE CITY MANAGER TO TAKE CERTAIN ACTIONS; PROVIDING FOR APPROPRIATION OF ALL BUDGETS AND EXPENDITURES; PROVIDING FOR FEES CONSISTENT WITH APPROPRIATIONS AND AMENDMENT; PROVIDING FOR INCORPORATION OF RECITALS; PROVIDING FOR CONFLICT AND REPEALER; PROVIDING FOR SEVERABILITY; PROVIDING FOR AN EFFECTIVE DATE.** *Sponsored by Interim City Manager*

The above ordinance was read by Assistant City Attorney Candice Cobb.

It was moved by Commissioner Bass, seconded by Vice Mayor Ervin, to discuss Agenda Item 16-A.1.

Interim City Manager Sha'mecca Lawson introduced the item and provided a brief background.

Mayor Taylor opened the public hearing. No one came forth to speak. Mayor Taylor closed the public hearing.

There being no additional discussion, the motion to approve the ordinance on first reading passed by a 5-0 vote.

Vice Mayor Ervin Yes
Commissioner Bass Yes
Commissioner Kelley Yes
Commissioner Williams Yes
Mayor Taylor Yes

B. SECOND READING ORDINANCE(S)/PUBLIC HEARING(S):

1. **AN ORDINANCE OF THE CITY COMMISSION OF THE CITY OF OPA-LOCKA, FLORIDA, CREATING A NEW ARTICLE XI OF THE CITY CODE OF ORDINANCES; RENUMBERING THE SECTIONS FOLLOWING; SPECIFICALLY ADOPTING CERTAIN PROVISIONS OF SENATE BILL 102, THE "LIVE LOCAL ACT" RELATING TO AFFORDABLE HOUSING; PROVIDING FOR THE ADMINISTRATIVE APPROVAL OF CERTAIN QUALIFIED PROJECTS CONTAINING AFFORDABLE HOUSING UNITS; AUTHORIZING THE CITY MANAGER TO TAKE CERTAIN ACTIONS; PROVIDING FOR**

INCORPORATION OF RECITALS; PROVIDING FOR CONFLICT; PROVIDING FOR SEVERABILITY; PROVIDING FOR AN EFFECTIVE DATE (first reading/public hearing held on June 26, 2024). *Sponsored by Interim City Manager* Deferred from 10/23/2024 RCM

The above ordinance was read by Assistant City Attorney Candice Cobb.

It was moved by Commissioner Kelley, seconded by Vice Mayor Ervin, to discuss Agenda Item 16-B.1.

Interim City Manager Sha'mecca Lawson introduced the item and provided a brief background.

Mayor Taylor opened the public hearing.

Luis Santiago, 1156 Peri Street, expressed concerns about the affordability of housing in Opa-locka, citing that many residents cannot afford high rent prices like those in new developments, such as the $3,800 apartments on 22nd Avenue. He emphasized the importance of being honest about what is truly affordable, stressing that affordability should reflect the financial reality of many local residents who live on low-income or pension checks.

Mayor Taylor closed the public hearing.

Mayor Taylor explained that the ordinance being discussed is a requirement due to the adoption of Senate Bill 102, a state law that the city must comply with. He acknowledged concerns about affordable housing and reiterated that the city shares those concerns. However, the ordinance must be adopted as required by state statute, emphasizing that the city is already behind in this process.

There being no additional discussion, the motion to approve the ordinance, upon second reading, passed by a 5-0 vote.

Vice Mayor Ervin Yes
Commissioner Bass Yes
Commissioner Kelley Yes
Commissioner Williams Yes
Mayor Taylor Yes

2. **AN ORDINANCE OF THE CITY COMMISSION OF THE CITY OF OPA-LOCKA, FLORIDA, AMENDING ARTICLE II, DIVISION 2, SECTION 2-45, OF THE CITY OF OPA-LOCKA'S CODE OF ORDINANCES, ENTITLED "AGENDA" TO DELETE ALL REFERENCES TO "FUTURE AGENDA ITEMS"; PROVIDING FOR SEVERABILITY, CONFLICT AND REPEALER; AND PROVIDING FOR AN EFFECTIVE DATE (first reading / public hearing held on October 23, 2024).** *Sponsored by Mayor Taylor*

The above ordinance was read by Assistant City Attorney Candice Cobb.

It was moved by Commissioner Kelley, seconded by Commissioner Williams, to discuss Agenda Item 16-B.2.

Mayor Taylor introduced the item.

Mayor Taylor opened the public hearing. No one came forth to speak. Mayor Taylor closed the public hearing.

There being no additional discussion, the motion to approve the ordinance, upon second reading, passed by a 4-1 vote.

Vice Mayor Ervin Yes
Commissioner Bass No
Commissioner Kelley Yes
Commissioner Williams Yes
Mayor Taylor Yes

3. **AN ORDINANCE OF THE CITY COMMISSION OF THE CITY OF OPA-LOCKA, FLORIDA, AMENDING THE ANNUAL ADOPTED GENERAL, PROPRIETARY AND SPECIAL REVENUE FUNDS BUDGETS FOR THE FISCAL YEAR COMMENCING OCTOBER 1, 2023 AND ENDING SEPTEMBER 30, 2024, ADJUSTING REVENUES AND EXPENDITURES AS REFLECTED IN EXHIBIT "A"; PROVIDING FOR THE EXPENDITURE OF FUNDS ESTABLISHED BY THE BUDGET; AUTHORIZING THE CITY MANAGER TO TAKE CERTAIN ACTIONS; PROVIDING FOR APPROPRIATION OF ALL BUDGETS AND EXPENDITURES; PROVIDING FOR FEES CONSISTENT WITH APPROPRIATIONS AND AMENDMENT; PROVIDING FOR INCORPORATION OF RECITALS; PROVIDING FOR CONFLICT AND REPEALER; PROVIDING FOR SEVERABILITY; PROVIDING FOR AN EFFECTIVE DATE (first reading / public hearing held on October 23, 2024).** *Sponsored by Interim City Manager*

The above ordinance was read by Assistant City Attorney Candice Cobb.

It was moved by Commissioner Bass, seconded by Commissioner Williams, to discuss Agenda Item 16-B.3.

Interim City Manager Sha'mecca Lawson introduced the item and provided a brief background.

Mayor Taylor opened the public hearing. No one came forth to speak. Mayor Taylor closed the public hearing.

Commissioner Kelley expressed concerns about the use of budget amendments, particularly when related to vacancies. He emphasized that budget amendments should be reserved for emergencies or unforeseen circumstances, not as a tool to catch up on missed financial planning. He urged for more diligent fiscal analysis in the future, to avoid reallocating funds from essential areas, such as vacancies or educational opportunities for employees.

There being no additional discussion, the motion to approve the ordinance, upon second reading, passed by a 5-0 vote.

Vice Mayor Ervin Yes
Commissioner Bass Yes
Commissioner Kelley Yes
Commissioner Williams Yes
Mayor Taylor Yes

C. RESOLUTION(S):

There were none.

17. CITY MANAGER'S REPORT:

Interim City Manager Lawson submitted a written report to the City Commission, detailing key activities, initiatives, and ongoing projects within Opa-locka. She welcomed any questions or concerns.

Commissioner Williams inquired about water billing issues, and Interim City Manager Lawson shared that the city plans to hire an in-house employee to work with Miami Dade County on billing concerns. Interim City Manager Lawson also mentioned awaiting a list of affected residents to address their issues.

Commissioner Williams asked about the process for hiring the new position, and Ms. Niema Gantt, Director of Finance, explained that two temporary staff members would transition into the role, with two additional interviews scheduled for the following day. She noted that the firm being used specializes in finding government employees, including accountants, and emphasized the ongoing efforts to fill the role.

Commissioner Kelley asked about the impact on the department once the position is filled, and Ms. Gantt replied that the focus would be on the 2024 financials, while she continues to recruit for full-time staff. She confirmed that recruiting efforts are still ongoing.

Commissioner Kelley expressed support for Commissioner Williams' concerns about the water bill issue and suggested that the Mayor consider meeting with the County Mayor to address the ongoing high water bills. He acknowledged the steps the manager is taking but emphasized the need for stronger action and leadership to resolve the issue.

Commissioner Bass asked if the city could assist residents with having their homes inspected for leaks, as required by the county. Interim City Manager Lawson replied that the city would look into the fiscal impact of providing such assistance and bring it back to the commission.

Vice Mayor Ervin thanked the Interim City Manager for providing detailed information and keeping the commission informed about what's going on in the city. She expressed her appreciation for the transparency and encouraged continued good work.
Mayor Taylor expressed his satisfaction that the parks master plan is finally back and currently being reviewed by the Parks and Recreation staff. He requested that the plan be available for review before the commission votes on it, not just during the agenda briefing. He suggested scheduling one-on-one reviews if needed.

Commissioner Kelley expressed concerns about the trail at Segal Park, noting it has taken too long to complete despite multiple completion dates. He mentioned hearing ongoing concerns from residents and emphasized that the project, being relatively small, should not be taking this long. He stated he would await a report and analysis on the project but reiterated his dissatisfaction with the delays. He also thanked the manager for other updates and stated he would reach out regarding another item.

Mayor Taylor raised a concern about flooding at 100th and 32nd Street in front of the Mary Alice Brown apartments, noting it as a hot topic among residents. He mentioned speaking to a resident about it on Saturday and requested an update on the issue.

Ms. Adelina Gross, CIP Manager, acknowledged the flooding concerns on 132nd Street from 27th to City Avenue and confirmed that repairs are underway. An RFP is expected for the initial mitigation process, aimed at preventing flooding during common rain events. Additionally, the department is seeking grant funding to address the entire area from 27th to 30th Avenue.

Discussion continued about 27th Avenue, mitigation, and impact.

Mayor Taylor and Ms. Gross discussed the city's efforts to address flooding concerns. Ms. Gross confirmed that an RFP has been issued for the 132nd Street repairs, which will include a contractor for emergency work, such as cleaning and repairing drainage lines. This contract will help ensure that the city is prepared for both immediate and preventative measures related to water management.

Commissioner Williams expressed concerns about the deteriorating road conditions on La June and the section between 27th and 22nd Avenue, particularly due to the heavy truck traffic from businesses in the area. She emphasized the need for a special tax on businesses with large trucks to help fund road repairs, noting that the road's poor condition was caused by factors like poor compaction and drainage issues. Ms. Gross acknowledged the issues and stated that an evaluation of the street was underway, with improvements planned, but noted that the process was still awaiting completion of the contract.

Mayor Taylor suggested that the city conduct an in-house feasibility study on the potential for a special taxing district, without the need for an RFP or consultant. He recommended that the study include the pros and cons for the city and be presented to the City Commission for review.

18. OFFICIAL BOARD REPORTS:

There were none.

19. FUTURE AGENDA ITEMS:

There were none.

20. MAYOR/COMMISSION REPORTS:

Mayor John H. Taylor Jr.
Financial Oversight Update provided by Interim City Manager Sha'mecca Lawson

Mayor Taylor asked for an update on the financial oversight, and Interim City Manager Lawson replied that a letter had been sent to JLAC this week, which was also shared with elected officials. The letter provided an update on the audits and confirmed that the city is on track to complete the audit by December. Mayor Taylor expressed his support for the timely audit, emphasizing the importance of completing it before the extended deadline in June to show the city's commitment to coming out from under financial oversight.

Mayor Taylor reminded residents about the turkey giveaway on November 21st, next Thursday. Registration is required and can be done by calling the City Clerk's office. Additionally, the city's tree lighting ceremony will take place on Friday. He also confirmed the ribbon-cutting for the Sesame Street Bridge will occur next Monday.

Commissioner Kelley thanked Vice Mayor Ervin, Mayor Taylor, and the City Manager's office for their work on the Feeding South Florida event and Vice Mayor Ervin for handling bingo. He attended the veterans program hosted by Commissioner Bass and acknowledged the support of 1,719 voters in his re-election. Commissioner Kelley expressed gratitude for his family’s support and noted the upcoming swearing-in on December 6th. He commended those who serve the city and recognized the honor of serving alongside the Mayor and Vice Mayor.

Mayor Taylor asked everyone to keep Commissioner Holmes in their prayers, mentioning that although he had been under the weather, he is doing much better and has shared a testimony of healing.

Mayor Taylor left the meeting.

Vice Mayor Ervin expressed her honor in serving as Vice Mayor and mentioned her ongoing connection with Commissioner Williams. She wished everyone a Happy Thanksgiving and

reminded them of the holiday bingo on December 13, encouraging festive attire. She also congratulated Vice Mayor-elect Kelley and Commissioner-elect Santiago on their wins.

Commissioner Bass thanked all departments involved in the Veterans Day celebration, including the Clerk's Office, Parks, Police, and the Manager's Office, calling it a success and looking forward to next year. She invited the community to the Night of Thanksgiving on November 9th at 7 PM, a praise and worship service. Additionally, she invited everyone to the Mommy and Me brunch on November 24th, co-hosted with the Lou Foundation at Sherbondy Village from 2 to 6 PM.

Commissioner Williams thanked the mayor for co-hosting the Teen Summit on dating violence with the Top Ladies of Distinction and emphasized the importance of continuing to involve youth. She expressed gratitude to Steven for his work on the resource fair, praising its success and encouraging others to build on it. She thanked the community for supporting her and her family, reflecting on her pride in being born and raised in Opa-locka. Commissioner Williams congratulated the new Vice Mayor, Commissioner Kelly, and Commissioner Santiago on their appointments, offering her continued support to the Commission and the city. She wished everyone a Happy Thanksgiving.

Commissioner Bass thanked Vice Mayor Ervin for her service as Vice Mayor and welcomed Commissioner Santiago and Vice Mayor Kelly to their new roles. She expressed her excitement about working with her colleagues and wished blessings upon everyone.

21. OFFICIAL BOARD APPOINTMENTS:

City Clerk Flores informed the City Commission that an application was received from Andrew Herman, who expressed interest in serving on the Community Relations, Recreation, and Activities Advisory Board. However, since there is one individual appointment made by the Mayor, and the Mayor was not present, the matter will be brought up at the next meeting.

22. ADJOURNMENT:

There being no further business to come before the City Commission, it was moved by Commissioner Williams, seconded by Commissioner Kelley to adjourn the meeting at 8:55 p.m.

_____
John H. Taylor Jr.
Mayor

ATTEST:

_____
Joanna Flores, CMC
City Clerk

[Minutes prepared by T. Baclawski, Prototype-Inc.]

CITY OF OPA-LOCKA

"The City of Bright Opportunities"

SPECIAL COMMISSION MEETING
Wednesday, November 20, 2024
6:00 PM

1. CALL TO ORDER:

Mayor John H. Taylor Jr. called the Special Commission Meeting to order at 6:08 PM on Wednesday, November 20, 2024, at the City of Opa-locka Government Center, 780 Fisherman Street, Opa-locka, Florida.

2. ROLL CALL:

The following members of the City Commission were present: Vice Mayor Natasha L. Ervin, Commissioner Joseph L. Kelley, Commissioner Dr. Sherelean Bass, Commissioner Veronica Williams and Mayor John H. Taylor, Jr. Also, in attendance were: Interim City Manager Sha'mecca Lawson, Assistant City Manager George Ellis, Assistant City Attorney Candice Cobb, Assistant City Clerk Floralba Valdes-Wright, and City Clerk Joanna Flores.

3. INVOCATION:

The invocation was delivered by Commissioner Dr. Sherelean Bass.

4. PLEDGE OF ALLEGIANCE:

The pledge of allegiance was recited in unison.

5. PUBLIC INPUT:

Mayor Taylor opened Public Input. No one came forth to speak. Mayor Taylor closed Public Input.

6. RESOLUTIONS/ACTION ITEM

1. A RESOLUTION OF THE CITY COMMISSION OF THE CITY OF OPA-LOCKA, FLORIDA, AUTHORIZING THE INTERIM CITY MANAGER TO REJECT THE BID PROPOSAL FOR REQUEST FOR PROPOSALS (RFP) 24-1009200, FOR ART IN THE RIGHT OF WAY SERVICES; PROVIDING FOR INCORPORATION OF RECITALS; PROVIDING FOR AN EFFECTIVE DATE. *Sponsored by Interim City Manager*

The above resolution was read by Assistant City Attorney Candice Cobb.

It was moved by Commissioner Kelley, seconded by Commissioner Bass, to discuss Agenda Item 6-1.

Interim City Manager Lawson introduced the item and provided background.

There being no additional discussion, the motion to approve the resolution passed by a 5-0 vote.

Vice Mayor Ervin Yes
Commissioner Kelley Yes
Commissioner Williams Yes
Commissioner Bass Yes
Mayor Taylor Yes

2. A RESOLUTION OF THE CITY COMMISSION OF THE CITY OF OPA-LOCKA, FLORIDA, AUTHORIZING THE INTERIM CITY MANAGER TO ENTER INTO NEGOTIATION FOR ARTISTIC SERVICES; PROVIDING FOR INCORPORATION OF RECITALS; PROVIDING FOR AN EFFECTIVE DATE. *Sponsored by Interim City Manager*

The above resolution was read by Assistant City Attorney Candice Cobb.

It was moved by Commissioner Kelley, seconded by Vice Mayor Ervin, to discuss Agenda Item 6-2.

Interim City Manager Lawson introduced the item and provided background.

Commissioner Kelley asked if the agreement would come back to the City Commission. Assistant City Attorney Cobb confirmed the contract would come back for approval.

Commissioner Kelley asked if the administration intended to address the matter at the December meeting or through a special meeting, which they were trying to avoid. Interim City Manager Lawson confirmed the intent was to address it at the first meeting in December.

Mayor Taylor asked for the scope of the work when the item is brought forward.

There being no additional discussion, the motion to approve the resolution passed by a 5-0 vote.

Vice Mayor Ervin Yes
Commissioner Kelley Yes
Commissioner Williams Yes
Commissioner Bass Yes
Mayor Taylor Yes

3. A RESOLUTION OF THE CITY COMMISSION OF THE CITY OF OPA-LOCKA, FLORIDA, AUTHORIZING THE INTERIM CITY MANAGER TO PIGGYBACK SOURCEWELL CONTRACT #FL-R10-GC02-111821- SCD WITH SHIFF CONSTRUCTION & DEVELOPMENT, INC. FOR QUALIFIED PROFESSIONAL SERVICES FOR GENERAL CONSTRUCTION SERVICES (SOURCEWELL IFB #111821), AND ENTER INTO AN AGREEMENT WITH SHIFF CONSTRUCTION & DEVELOPMENT, INC. FOR LIFT STATION #9 REPLACEMENT PROJECT SERVICES, IN AN AMOUNT NOT TO EXCEED ONE MILLION, ONE HUNDRED FORTY-NINE THOUSAND, SIX HUNDRED THIRTY-NINE DOLLARS AND NINETY-THREE CENTS ($1,149,639.93); PROVIDING FOR INCORPORATION OF RECITALS; PROVIDING FOR AN EFFECTIVE DATE. *Sponsored for Interim City Manager*

The above resolution was read by Assistant City Attorney Cobb.

It was moved by Commissioner Kelley, seconded by Commissioner Williams, to discuss Agenda Item 6-3.

Interim City Manager Lawson introduced the item and provided background.

Commissioner Kelley raised a question regarding whether the company could handle the workload for both projects discussed in Items 9 and 16, within the required timeframe. Interim City Manager Lawson confirmed that the company is capable and plans to complete both projects simultaneously.

Commissioner Williams asked Ms. Adelina Gross, CIP Manager, about safeguards to prevent additional costs. Ms. Gross confirmed the contract is a lump sum, with no modifications allowed without written agreement. She noted that engineering plans and site visits showed no need for changes, but any unforeseen modifications would depend on the situation.

There being no additional discussion, the motion to approve Resolution passed by a 5-0 vote.

Vice Mayor Ervin Yes
Commissioner Kelley Yes
Commissioner Williams Yes
Commissioner Bass Yes
Mayor Taylor Yes

4. A RESOLUTION OF THE CITY COMMISSION OF THE CITY OF OPA-LOCKA, FLORIDA, AUTHORIZING THE INTERIM CITY MANAGER TO PIGGYBACK SOURCEWELL CONTRACT #FL-R10-GC02-111821-SCD WITH SHIFF CONSTRUCTION & DEVELOPMENT, INC. FOR QUALIFIED PROFESSIONAL SERVICES FOR GENERAL CONSTRUCTION SERVICES (SOURCEWELL IFB #111821), AND ENTER INTO AN AGREEMENT WITH SHIFF CONSTRUCTION & DEVELOPMENT, INC. FOR LIFT STATION #16 REPLACEMENT PROJECT SERVICES, IN AN AMOUNT NOT TO EXCEED NINE HUNDRED FORTY-NINE THOUSAND, FOUR HUNDRED EIGHTY-FIVE DOLLARS AND NINETY-SEVEN CENTS ($949,485.97); PROVIDING FOR INCORPORATION OF RECITALS; PROVIDING FOR AN EFFECTIVE DATE. Sponsored by Interim City Manager

The above resolution was read by Assistant City Attorney Cobb.

It was moved by Vice Mayor Ervin, seconded by Commissioner Williams, to discuss Agenda Item 6-4.

Interim City Manager Lawson introduced the item and provided background.

There being no additional discussion, the motion to approve Resolution passed by a 5-0 vote.

Vice Mayor Ervin Yes
Commissioner Kelley Yes
Commissioner Williams Yes

Commissioner Bass Yes
Mayor Taylor Yes

5. A RESOLUTION OF THE CITY COMMISSION OF THE CITY OF OPA-LOCKA, FLORIDA, AUTHORIZING THE INTERIM CITY MANAGER TO ACCEPT THE PROPOSAL OF SSN ENGINEERING, LLC FOR SANITARY SEWER COLLECTION SYSTEM HYDRAULIC MODELING SERVICES, PURSUANT TO RFQ NO. 24-1011200 AND FURTHER AUTHORIZING THE INTERIM CITY MANAGER TO ENTER INTO NEGOTIATIONS WITH SSN ENGINEERING, LLC FOR SAME; PROVIDING FOR INCORPORATION OF RECITALS; PROVIDING FOR AN EFFECTIVE DATE. *Sponsored by Interim City Manager*

The above resolution was read by Assistant City Attorney Cobb.

It was moved by Commissioner Kelley, seconded by Vice Mayor Ervin, to discuss Agenda Item 6-5.

Interim City Manager Lawson introduced the item and provided background.

Commissioner Kelley expressed concern about meeting deadlines and the issue of only receiving one bid for projects, which he noted is a recurring challenge. He emphasized the need to address why more companies are not bidding and urged careful negotiation to ensure the $150,000 budget is sufficient. Interim City Manager Lawson confirmed the intent to bring the agreement back at the December 1 meeting.

There being no additional discussion, the motion to approve Resolution passed by a 5-0 vote.

Vice Mayor Ervin Yes
Commissioner Kelley Yes
Commissioner Williams Yes
Commissioner Bass Yes
Mayor Taylor Yes

6. A RESOLUTION OF THE CITY COMMISSION OF THE CITY OF OPA-LOCKA, FLORIDA, AUTHORIZING THE INTERIM CITY MANAGER TO REJECT ALL BIDS FOR REQUEST FOR PROPOSALS (RFP) 24-1008200 FOR TREE AND PLANT INSTALLATION SERVICES; PROVIDING FOR INCORPORATION OF RECITALS; PROVIDING FOR AN EFFECTIVE DATE. *Sponsored by Interim City Manager*

The above resolution was read by Assistant City Attorney Cobb.

It was moved by Commissioner Williams, seconded by Commissioner Kelley, to discuss Agenda Item 6-6.

Interim City Manager Lawson introduced the item and provided background.

Commissioner Kelley stated he supported reallocating funds to the Artscape project, noting it increased from $62,000, but expressed concern about planting new trees without a maintenance

plan. He emphasized the need to address maintenance for existing trees before considering additional tree planting in the future.

There being no additional discussion, the motion to approve Resolution passed by a 5-0 vote.

Vice Mayor Ervin Yes
Commissioner Kelley Yes
Commissioner Williams Yes
Commissioner Bass Yes
Mayor Taylor Yes

7. A RESOLUTION OF THE CITY COMMISSION OF THE CITY OF OPA- LOCKA, FLORIDA, ACCEPTING THE PROPOSAL OF SAFA CONSTRUCTION, LLC FOR CAIRO LANE & NW 127TH STREET DRAINAGE, UTILITIES AND ROADWAY IMPROVEMENTS PROJECT SERVICES, PURSUANT TO ITB NO. 24-1114200 AND FURTHER AUTHORIZING THE INTERIM CITY MANAGER TO ENTER INTO AN AGREEMENT WITH SAFA CONSTRUCTION, LLC FOR SAME, IN AN AMOUNT NOT TO EXCEED FIVE MILLION, FOUR HUNDRED NINE THOUSAND, EIGHT HUNDRED SEVENTY-FOUR DOLLARS ($5,409,874.00) AND IN THE FORM ATTACHED HERETO AS EXHIBIT "A"; PROVIDING FOR INCORPORATION OF RECITALS; PROVIDING FOR AN EFFECTIVE DATE. *Sponsored by Interim City Manager*

The above resolution was read by Assistant City Attorney Cobb.

It was moved by Vice Mayor Ervin, seconded by Commissioner Bass, to discuss Agenda Item 6-7.

Interim City Manager Lawson introduced the item and provided background.

Mayor Taylor asked if the project was in its final phase and was assured by staff that it was. He reiterated the need to establish a special taxing district for the area to address future maintenance, noting the city's significant investments, including $5 million this year, to mitigate the issue. Ms. Adelina Gross explained that the project would take 12 to 18 months to complete due to its complexity, including removing buried debris, replacing drainage systems, and installing new connections to address non-functional infrastructure.

Ms. Gross confirmed that the project would start seven days after the notice to proceed is issued.

Commissioner Kelley acknowledged the ongoing nature of the project and stressed the importance of assessing other areas in the city with similar infrastructure challenges, possibly requiring additional consulting. He highlighted the benefit of individual metering, which the completed project would provide, along with roadway and drainage improvements. He expressed anticipation for these advancements and confirmed, as Mayor Taylor stated, that this is the final phase of the project.

Commissioner Williams expressed excitement for the Cairo Lane project and urged the creation of a special taxing district to address maintenance and environmental protections, such as sewage

and drainage. She emphasized the importance of prioritizing this initiative, noting it should have been addressed years ago.

There being no additional discussion, the motion to approve Resolution passed by a 5-0 vote.

Vice Mayor Ervin Yes
Commissioner Kelley Yes
Commissioner Williams Yes
Commissioner Bass Yes
Mayor Taylor Yes

8. A RESOLUTION OF THE CITY COMMISSION OF THE CITY OF OPA-LOCKA, FLORIDA, APPROVING THE USE OF CITY RESOURCES TO SUPPORT THE OPA-LOCKA COMMUNITY DEVELOPMENT CORPORATION, INC'S FIVEDAY EVENT, "THE ART OF TRANSFORMATION" (THE "EVENT") TO BE HELD ON DECEMBER 4TH - 8TH, 2024; PROVIDING FOR INCORPORATION OF RECITALS; PROVIDING FOR AN EFFECTIVE DATE. *Sponsored by Interim City Manager*

The above resolution was read by Assistant City Attorney Cobb.

It was moved by Vice Mayor Ervin, seconded by Commissioner Bass, to discuss Agenda Item 6-8.

Interim City Manager Lawson introduced the item and provided background.

Commissioner Kelley requested larger chairs at this year's event.

Commissioner Williams thanked everyone for hosting the event, emphasizing its importance in expanding the city's cultural diversity.

There being no additional discussion, the motion to approve Resolution passed by a 5-0 vote.

Vice Mayor Ervin Yes
Commissioner Kelley Yes
Commissioner Williams Yes
Commissioner Bass Yes
Mayor Taylor Yes

9. A RESOLUTION OF THE CITY COMMISSION OF THE CITY OF OPA-LOCKA, FLORIDA, ADOPTING THE ELECTION RESULTS OF THE CITY OF OPALOCKA'S GENERAL ELECTION HELD ON NOVEMBER 5, 2024, FOR THE PURPOSE OF ELECTING TWO CITY COMMISSIONERS, AS CERTIFIED BY MIAMI-DADE COUNTY SUPERVISOR OF ELECTIONS; PROVIDING FOR THE INCORPORATION OF RECITALS; PROVIDING FOR AN EFFECTIVE DATE. *Sponsored by City Clerk*

The above resolution was read by Assistant City Attorney Cobb.

It was moved by Vice Mayor Ervin, seconded by Commissioner Williams, to discuss Agenda Item 6-9.

City Clerk Flores introduced the item and provided background.

Mayor Taylor thanked everyone who participated in the election and welcomed those who were victorious. He expressed enthusiasm for collaborating with the Vice Mayor-elect and Commissioner-elect, emphasizing the importance of working together as a team to advance the city's progress.

There being no additional discussion, the motion to approve Resolution passed by a 5-0 vote.

Vice Mayor Ervin Yes
Commissioner Kelley Yes
Commissioner Williams Yes
Commissioner Bass Yes
Mayor Taylor Yes

7. ADJOURNMENT

Mayor Taylor requested all ARPA projects to be put into one package for consideration.

Mayor Taylor reminded everyone about the turkey drive at Sherbondy Village tomorrow at 4 PM, emphasizing the need to register in advance with the City Clerk. He also announced the tree lighting ceremony on Friday at 5:30 PM at the Government Center.

There being no further business to come before the City Commission, it was moved by Commissioner Williams, seconded by Commissioner Dr. Bass to adjourn the meeting at 6:38 p.m.

_____
John H. Taylor, Jr.
Mayor

ATTEST:

_____
Joanna Flores, CMC
City Clerk

Sponsored by: Interim City Manager

RESOLUTION NO. 24-XXXX

A RESOLUTION OF THE CITY COMMISSION OF THE CITY OF OPA-LOCKA, FLORIDA, AUTHORIZING AN EXTENSION OF THE AGREEMENT WITH THE EMPLOYEE RELATIONS GROUP LLC TO SERVE AS THE CITY'S OUTSIDE ENTITY HUMAN RESOURCES DIRECTOR; PROVIDING FOR INCORPORATION OF RECITALS; PROVIDING FOR AN EFFECTIVE DATE

WHEREAS, on November 29, 2023, at a Special Meeting of the City of Opa-Locka City Commission ("City Commission") a contract was awarded to The Employee Relations Group LLC for outside entity Human Resources Director Services; and

WHEREAS, the awarded contract was for a one-year term, with two one-year options for renewal and with the first year expiring on December 18, 2024; and

WHEREAS, the City Commission of the City of Opa-Locka desires to exercise its option to extend the contract for an additional one-year term.

NOW THEREFORE, BE IT RESOLVED BY THE CITY COMMISSION OF THE CITY OF OPA LOCKA, FLORIDA:

SECTION 1. RECITALS ADOPTED.

The recitals to the preamble herein are incorporated by reference.

SECTION 2. AUTHORIZATION

The City Commission of the City of Opa-Locka, Florida hereby exercises its option to extend the contract term with The Employee Relations Group, LLC for an additional one-year term for the provision of Outside Entity Human Resources Director services pursuant to the same terms and conditions as the original agreement.

SECTION 3. SCRIVENER'S ERRORS.

Sections of this Resolution may be renumbered or re-lettered and corrections of typographical errors, which do not affect the intent of this Resolution may be authorized by the City Attorney without need of public hearing, by filing a corrected copy of same with the City Clerk.

SECTION 4. EFFECTIVE DATE

This Resolution shall take effect upon the adoption and shall be provided to Governor or Governor's Designee.

PASSED and **ADOPTED** this 11th day of December 2024.

_____
John Taylor, Mayor

ATTEST:

_____
Joanna Flores, City Clerk

APPROVED AS TO FORM
AND LEGAL SUFFICIENCY:

_____
Burnadette Norris-Weeks, P.A.
City Attorney

Moved by: _____

Seconded by: _____

VOTE:

Commissioner Bass	_____
Commissioner Santiago	_____
Commissioner Ervin	_____
Vice Mayor Kelley	_____
Mayor Taylor	_____

City of Opa-locka
Agenda Cover Memo

Interim City Manager:	Shamecca Lawson			**ICM Signature:**			
Commission Meeting Date:	*12.11.2024*		**Item Type:** *(Enter X in box)*	**Resolution**	**Ordinance**		**Other**
				X			
Fiscal Impact: *(Enter X in box)*	**Yes**	**No**	**Ordinance Reading:** *(Enter X in box)*		**1st Reading**		**2nd Reading**
	X		**Public Hearing:** *(Enter X in box)*		**Yes**	**No**	**Yes**	**No**
						X		**X**
Funding Source: *Account#:* **13-513312**	*(Enter Fund & Dept)* Ex: See Financial Impact Section		**Advertising Requirement:** *(Enter X in box)*		**Yes**		**No**
							X
Contract/P.O. Required: *(Enter X in box)*	**Yes**	**No**	**RFP/RFQ/Bid#:**				
		X					
Strategic Plan Related *(Enter X in box)*	**Yes**	**No**	**Strategic Plan Priority Area:** **Enhance Organizational** ☐ **Bus. & Economic Dev** ■ **Public Safety** ☐ **Quality of Education** ☐ **Qual. of Life & City Image** ☐ **Communication** ☐		**Strategic Plan Obj./Strategy:** *(list the specific objective/strategy this item will address)*		
	X						
Sponsor Name	Interim City Manager		**Department:**		City Manager		

Short Title:

A RESOLUTION OF THE CITY COMMISSION OF THE CITY OF OPA-LOCKA AUTHORIZING THE INTERIM CITY MANAGER TO RENEW THE AGREEMENT WITH THE EMPLOYEE RELATIONS GROUP LLC TO SERVE AS THE CITY'S OUTSIDE ENTITY HUMAN RESOURCES DIRECTOR.

Staff Summary:

The City Commission approved Resolution 23-181, authorizing the City Manager to execute an agreement with The Employee Relations Group LLC to serve as the City's outside entity Human Resources Director.

The initial term is set to expire December 18, 2024, and pursuant to Article 10, Section 10.1 of the executed agreement, the City Commission desires to renew the firm's agreement for an additional one (1) year period.

The role of Human Resources Director is essential as it ensure the City utilizes the most ethical practices and remains in compliance with federal, state and local laws and regulations related to employment and internal policies and procedures.

Financial Impact- This item is included in the FY 25 adopted budget, with funding not to exceed $165,000 for the year, allocated to account 13-513312 (Other Professional Services). As a one-year agreement, this item does not have a long-term ongoing impact on the General Fund.

Proposed Action:

Staff recommends authorization to renew the agreement with The Employee Relations Group, LLC.

Attachment:

Resolution 23-181
Executed Agreement- The Employee Relations Group, LLC
Renewal Agreement-The Employee Relations Group, LLC

AGREEMENT

THIS IS AN AGREEMENT, dated the 18 day of December, 2023, between:

CITY OF OPA-LOCKA,
a Florida municipal corporation, hereinafter "CITY,"

and

THE EMPLOYEE RELATIONS GROUP LLC

a for Profit Company, authorized to do business in the State of Florida, hereinafter "CONTRACTOR."

WITNESSETH:

In consideration of the mutual terms and condition, promises, covenants, and payments hereinafter set forth, CITY and CONTRACTOR agree as follows:

ARTICLE 1
PREAMBLE

The City of Opa-locka and Contractor desire to enter into a professional services agreement for CONTRACTOR to perform as the City's Human Resources Director and Department and provide services consistent with the City's Ordinances. The scope of work may include, but is not limited to recruitment, hiring practices, working along with the City Manager, City Attorney and city staff to ensure legal compliance, creation or revisions of policies and procedures necessary for a functioning Human Resources Department. The Human Resources Director shall report directly to the City Manager as a best practice for this function.

In order to establish the background, context and for of reference for this Agreement and to generally express the objectives, and intentions, of the respective parties herein, the following statements, representations and explanations shall be accepted as predicates for the undertakings and commitments included within the provisions which follow and may be relied upon by the parties as essential elements of the mutual considerations upon which this Agreement is based.

1.1 CITY requested qualifications for services consistent with the CITY's desire to hire a Contractor to perform Outside Entity Human Resources services through Request for Qualifications #23-1107100.

1.2 On November 29, 2023 at a Special Meeting of the City Commission the CITY awarded the CONTRACT and authorized the proper CITY officials to enter into an agreement with CONTRACTOR to render the services more particularly described herein below.

ARTICLE 2
SCOPE OF WORK

2.1 The CONTRACTOR shall furnish all of the materials, tools, supplies, and labor necessary to perform all of the work described in Contractor's proposal for services, a copy of which is attached hereto and specifically made a part of this Agreement as Exhibit "A".

Further, the Scope of Work for Contractor shall be consistent with Section 2-1 of the Request for Qualifications #11-07100, entitled *"Purpose and Scope of Work"* as outlined and unless specifically omitted below:

Scope of Work

The selected individual or CONTRACTOR shall be expected to perform the services required under the Request for Qualifications in the most expeditious manner possible. The scope should include the following, but is not limited to:

1. Conducting and overseeing a City Manager Search consistent with the City's Code of Ordinances and existing procedures for the selection of a City Manager. With respect to the search of the City Manager, the Human Resources Director shall not communicate with the Interim City Manager or share any information that is not shared with any other candidate seeking the position of the permanent City Manager. Further, the Human Resources Director shall not share information or operate in any way that would serve to give the Interim City Manager an advantage or control of the City Manager selection process. To the extent that the Human Resources Director feels compromised in any way by the Interim City Manager, this information shall be immediately reported, by email, to the City Commission with a copy of the email provided to the City Clerk and the City Attorney.

2. Professional Human Resources Duties: The CONTRACTOR shall serve as the Human Resources Director and perform all professional human resources duties as required by City Ordinances. The CONTRACTOR shall advise and report to management on HR best practices and compliance with employment laws and policies. The CONTRACTOR would also be available to assist with employee relations and disputes.

The CONTRACTOR will meet with key representatives (City Manager, Assistant City Managers, and Directors as needed) to discuss the needs of the City. The CONTRACTOR will also meet with the City Attorney when necessary to secure information needed for the City Attorney's work.

3. Creating, Updating, and Implementing HR/Employment Policies: CONTRACTOR would work with management on creating, updating, and implementing HR/Employment policies and procedures. The CONTRACTOR would assist the city with updating the employee manual on an as-needed basis.

4. Job Descriptions: The CONTRACTOR would work with management to revise and create new job descriptions when necessary.

5. Recruitment: Recruitment services for various positions to be filled as needed. The HR professional or CONTRACTOR would work with the City during relevant recruitment periods.

- Meet with key decision makers to develop ideal candidate profiles.
- Write or adapt job description and determine or confirm salary range for management review and board approval, if appropriate.
- Develop and implement recruitment and an advertising strategy for positions.
- Develop (or modify existing) job flyer.
- Assist with advertisement in appropriate locations, including social media and specialized job boards. Review application packets and assess candidates with management.
- Manage the interview process, including developing questions and scoring mechanisms.
- Where necessary, conduct skills testing.
- Work with law enforcement to obtain any necessary credentials needed for background checks where appropriate.
- Check references and conduct background checks.
- Other recruitment tasks as necessary.
- Other relevant tasks as required for the smooth operation of the Human Resources Department.

7. Other HR Functions and Support As Needed: Other HR functions and support that are needed include, but not limited to, Compensation Study and Assistance with Benchmark Classifications, investigations of complaints by employees, reviewing of counseling or other disciplinary actions, memos, etc., training or coaching of staff in HR areas as needed, policy or procedure writing, updating and/or review, and special projects related to the position.

8. Legal Compliance: Ensure compliance with federal, state, and local laws and regulations related to employment and internal policies and procedures. Be knowledgeable about HR laws and regulations pertinent to public agencies under the general law. Provide suggestions and recommendations regarding areas that need to be addressed for legal compliance.

9. Deliverables: The City expects the CONTRACTOR to work onsite at least one (1) day per week for no less than six (6) hours day and be available through telephone, remote video conference, or email as needed throughout the week. Note: The City prefers having set hours of availability for at least two days a week and expects the CONTRACTOR to respond to email within a 24 hour period. Other arrangements may be negotiated by the parties on an as needed basis.

10. Reports: CONTRACTOR shall prepare regular reports regarding progress within the areas outlined in this Scope of Services and those reports shall be subject to public inspection to be provided to the City Clerk upon request.

2.2 CONTRACTOR hereby represents to CITY, with full knowledge that CITY is relying upon these representations when entering into this Agreement with CONTRACTOR, that CONTRACTOR has the professional expertise, experience and manpower to perform the services to be provided by CONTRACTOR pursuant to the terms of this Agreement.

ARTICLE 3
TIME FOR COMPLETION

3.1 The CONTRACTOR shall commence work to be performed under this Agreement beginning at the time this Agreement is executed by the Interim City Manager and to be no later than forty-eight hours following passage of a resolution confirming CONTRACTOR by the City Commission and approval by the State of Florida. CONTRACTOR shall complete all work in a timely manner and work together with CITY on a reasonable timetable and priority for work to be performed.

3.2 CITY agrees to reasonably work together with CONTRACTOR to facilitate the completion of timetables and promptly provide information to CONTRACTOR as necessary.

ARTICLE 4
CONTRACT SUM

4.1 The CITY hereby agrees to pay CONTRACTOR for the faithful performance of this Agreement, for work related to this Agreement the amount of One Hundred and Sixty-five

Thousand Dollars per fiscal year, to be paid in monthly installments.

4.2 The making and acceptance of the final payment shall constitute a waiver of all claims by CONTRACTOR except those previously made and still unsettled.

ARTICLE 5
CONTRACTOR'S LIABILITY INSURANCE

5.1 The CONTRACTOR shall not commence work under this contract until it has obtained all insurance required under this Article.

5.2 CONTRACTOR shall maintain insurance coverage reflecting at least the minimum amounts and conditions specified herein. Evidence of General Liability coverage shall be maintained with limits not less than $1,000,000 per Occurrence (Including Policy Number and Policy Period).

5.3 Evidence of Auto Liability coverage with limits not less than $300,000 per Occurrence (Including Policy Number and Policy Period).

5.4 Evidence of Workers' Compensation coverage with statutory limits and Employer's Liability coverage with limits not less than $100,000 (Including Policy Number and Policy Period), if applicable.

5.5 The City shall be listed as an additional insured (this may be specifically limited to the specific job(s) the contractor will be performing).

5.6 Minimum 30-day written notice of cancellation.

ARTICLE 6
PROTECTION OF PROPERTY

6.1 At all times during the performance of this Contract, the CONTRACTOR shall protect the CITY's property from all damage whatsoever.

ARTICLE 7
CONTRACTOR'S INDEMNIFICATION

7.1 The CONTRACTOR agrees to release the CITY from and against any and all liability and responsibility in connection with the above mentioned matters. The CONTRACTOR further agrees not to sue or seek any money or damages from CITY in connection with the above mentioned matters.

7.2 The CONTRACTOR agrees to indemnify and hold harmless the CITY, its trustees, elected and appointed officers, agents, servants and employees, from and against any and all claims, demands, or causes of action of whatsoever kind or nature and the resulting losses, costs, expenses, reasonable attorneys' fees, liabilities, damages, orders, judgments, or decrees, sustained by the CITY or any third party arising out of, or by reason of, or resulting from the CONTRACTOR's negligent acts, errors, or omissions.

7.3 If a court of competent jurisdiction holds the City liable for certain tortuous acts of its agents, officers, or employees, such liability shall be limited to the extent and limit provided in 768.28, Florida Statutes. This provision shall not be construed as a waiver of any right or defense that the City may possess. The City specifically reserves all rights as against any and all claims that may be brought.

ARTICLE 8
INDEPENDENT CONTRACTOR

8.1 This Agreement does not create an employee/employer relationship between the parties. It is the intent of the parties that the CONTRACTOR is an independent contractor under this Agreement and not the CITY's employee for any purposes, including but not limited to, the application of the Fair Labor Standards Act minimum wage and overtime payments, Federal Insurance Contribution Act, the Social Security Act, the Federal Unemployment Tax Act, the provisions of the Internal Revenue Code, the State Workers Compensation Act and the State unemployment insurance law and similar laws. The CONTRACTOR shall retain sole and absolute discretion in the judgment of the manner and means of carrying out the CONTRACTOR's activities and responsibilities hereunder provided. This Agreement shall not be construed as creating any joint employment relationship between the CONTRACTOR and the CITY and the CITY will not be liable for any obligation incurred by CONTRACTOR, including but not limited to unpaid minimum wages and/or overtime premiums.

ARTICLE 9
CHANGES TO SCOPE OF WORK AND ADDITIONAL WORK

9.1 CITY or CONTRACTOR may request changes that would increase decrease or otherwise modify the Scope of Services/Basic Services to be provided under this Agreement as described in Article 2 of this Agreement. Such changes or additional services must be in accordance with the provisions of the Code of Ordinances of the CITY and must be contained in a written amendment, executed by the parties hereto, with the same formality and with equality and dignity prior to any deviation from the terms of this Agreement, including the initiation of any additional or extra work. Each amendment shall at a minimum include the following information on each project:

PROJECT NAME
PROJECT DESCRIPTION
ESTIMATED PROJECT COST
ESTIMATED COST FOR ADDITION OR CHANGE TO PROJECT CONTRACT
ESTIMATED PROJECT COMPLETION DATE

9.2 In no event will the CONTRACTOR be compensated for any work which has not been described in a separate written agreement executed by the parties hereto.

ARTICLE 10
TERM AND TERMINATION

10.1 The term of this Agreement shall be for a one (1) year fiscal year period with two (2) one (1) year options for renewal. Agreement may be terminated by City with cause in the event that the CONTRACTOR abandons or is in material breach of this Agreement.

All finished or unfinished documents, data, studies, plans, surveys, and reports prepared by CONTRACTOR shall become the property of CITY and shall be delivered by CONTRACTOR to CITY.

10.2 This Agreement shall take effect as of the date of execution is to take place and as is contemplated by the Agreement.

ARTICLE 11
CONTRACT DOCUMENTS

11.1 CONTRACTOR and CITY hereby agree that the following Specification and Contract Documents, which are attached hereto and made a part thereof, are fully incorporated herein and made a part of this Agreement, as if written herein word for word. Unless otherwise provided, this Agreement shall take precedence over any other document. Attachments to this Agreement are CONTRACTOR's Response to Request for Qualifications as set forth in Exhibit "A" and CITY's Request for Qualifications as Exhibit "B".

ARTICLE 12
MISCELLANEOUS

12.1 Legal Representation. It is acknowledged that each party to this Agreement had the opportunity to be represented by counsel in the preparation of this Agreement and, accordingly, the rule that a contract shall be interpreted strictly against the party preparing same shall not apply due to the joint contribution of both parties.

12.2 Assignments. This Agreement, or any interest herein, shall not be assigned, transferred or otherwise encumbered, under any circumstances, by CONTRACTOR without the prior written consent of CITY. For purposes of this Agreement, any change of ownership of CONTRACTOR shall constitute an assignment which requires CITY approval. However, this Agreement shall run to the CITY and its successors and assigns.

12.3 Records. CONTRACTOR shall keep books and records and require any and all subcontractors to keep books and records as may be necessary in order to record complete and correct entries as to personnel hours charged to this engagement, and any expenses for which CONTRACTOR expects to be reimbursed, if applicable. Such books and records will be available at all reasonable times for examination and audit by CITY and shall be kept for a period of three (3) years after the completion of all work to be performed pursuant to this Agreement. Incomplete or incorrect entries in such books and records will be grounds for disallowance by CITY of any fees or expenses based upon such entries.

CITY is a public agency subject to Chapter 119, Florida Statutes. To the extent CONTRACTOR is acting on behalf of CITY pursuant to Section 119.0701, Florida Statutes, CONTRACTOR shall:

a. Keep and maintain public records that ordinarily and necessarily would be required to be kept and maintained by CITY were CITY performing the services under this agreement;

b. Provide the public with access to such public records on the same terms and conditions that the County would provide the records and at a cost that does not exceed that provided in Chapter 119, Florida Statutes, or as otherwise provided by law;

c. Ensure that public records that are exempt or that are confidential and exempt from public record requirements are not disclosed except as authorized by law; and

d. Meet all requirements for retaining public records and transfer to CITY, at no cost, all public records in possession of the CONTRACTOR upon termination of this Agreement and destroy any duplicate public records that are exempt or confidential and exempt. All records stored electronically must be provided to the CITY.

e. IF THE CONTRACTOR HAS QUESTIONS REGARDING THE APPLICATION OF CHAPTER 119, FLORIDA STATUTES, TO THE CONTRACTOR'S DUTY TO PROVIDE PUBLIC RECORDS RELATING TO THIS CONTRACT, **CONTACT THE CUSTODIAN OF PUBLIC RECORDS AT: (305) 953-2800;** jflores@Opalockafl.gov**; 780 Fisherman Street, Fourth Floor, Opa-locka, FL 33054.**

12.4 Ownership of Documents. Reports, surveys, plans, studies and other data provided in connection with this Agreement are and shall remain the property of City.

12.5 No Contingent Fees. CONTRACTOR warrants that it has not employed or retained any company or person, other than a bona fide employee working solely for the CONTRACTOR, to solicit or secure this Agreement, and that it has not paid or agreed to pay any person, company, corporation, individual or CONTRACTOR, other than a bona fide employee working solely for CONTRACTOR, any fee, commission, percentage, gift, or other consideration contingent upon or resulting from the award or making of this Agreement. For the breach or violation of this provision, the CITY shall have the right to terminate the Agreement without liability at its discretion, to deduct from the contract price, or otherwise recover the full amount of such fee, commission, percentage, gift or consideration.

12.6 Notice. Whenever any party desires to give notice unto any other party, it must be given by written notice, sent by registered United States mail, with return receipt requested, addressed to the party for whom it is intended and the remaining party, at the places last specified, and the places for giving of notice shall remain such until they shall have been changed by written notice in compliance with the provisions of this section. For the present,

the CONTRACTOR and the CITY designate the following as the respective places for giving of notice:

CITY:	Darvin Williams, Interim City Manager 780 Fisherman Street, Fourth Floor Opa-Locka, FL 33054
Copy To:	Burnadette Norris-Weeks, City Attorney Burnadette Norris-Weeks, P.A. 401 North Avenue of the Arts Fort Lauderdale, Florida 33311
CONTRACTOR:	Mary Adams 401 E. LAS OLAS BLVD. # 130-162 Fort Lauderdale, FL 33301

12.7 Binding Authority. Each person signing this Agreement on behalf of either party individually warrants that he or she has full legal power to execute this Agreement on behalf of the party for whom he or she is signing, and to bind and obligate such party with respect to all provisions contained in this Agreement.

12.8 Exhibits. Each Exhibit referred to in this Agreement forms an essential part of this Agreement. The exhibits if not physically attached should be treated as part of this Agreement and are incorporated herein by reference.

12.9 Headings. Headings herein are for convenience of reference only and shall not be considered on any interpretation of this Agreement.

12.10 Severability. If any provision of this Agreement or application thereof to any person or situation shall, to any extent, be held invalid or unenforceable, the remainder of this Agreement, and the application of such provisions to persons or situations other than those as to which it shall have been held invalid or unenforceable shall not be affected thereby, and shall continue in full force and effect and be enforced to the fullest extent permitted by law.

12.11 Governing Law. This Agreement shall be governed by the laws of the State of Florida with venue lying in Miami-Dade County, Florida.

12.12 Disputes. Any claim, objection, or dispute arising out of the terms of this Agreement shall be litigated in the Eleventh Judicial Circuit Court in and for Miami-Dade County.

12.13 Attorney's Fees. To the extent authorized by law, in the event that either party brings

suit for enforcement of this Agreement, the prevailing party shall be entitled to attorney's fees and court costs in addition to any other remedy afforded by law.

12.14 Extent of Agreement. This Agreement together with Contract Documents, attached as an Exhibits hereto, as amended herein above represents the entire and integrated agreement between the CITY and the CONTRACTOR and supersedes all prior negotiations, representations or agreements, either written or oral. To the extent of any conflict in the documents, this Agreement shall control.

12.15 Waiver. Failure of the CITY to insist upon strict performance of any provision or condition of this Agreement, or to execute any right therein contained, shall not be construed as a waiver or relinquishment for the future of any such provision, condition, or right, but the same shall remain in full force and effect.

13.16 Scrutinized Companies. Contractor hereby certifies that it: a) has not been placed on the Scrutinized Companies that Boycott Israel List, nor is engaged in a boycott of Israel; b) has not been placed on the Scrutinized Companies with Activities in Sudan List nor the Scrutinized Companies with Activities in the Iran Petroleum Energy Sector List; and c) has not been engaged in business operations in Cuba or Syria. If City determined that Contractor has falsely certified facts under this paragraph or if Contractor is found to have been placed on the Scrutinized Companies Lists or is engaged in a boycott of Israel after the execution of this Agreement, City will have all rights and remedies to terminate this Agreement consistent with Section 287.135, Florida Statutes, as amended. The City reserves all rights to waive the certifications required by this paragraph on a case-by-case exception basis pursuant to Section 287.135, Florida Statutes, as amended. City reserves all rights to waive the certifications required by this paragraph on a case-by-case exception basis pursuant to Section 287.135, Florida Statutes, as amended.

Contractor shall not enter into a contract with an entity which would give access to an individual's personal identifying information if: (1) the entity is owned by the government of a foreign country of concern; (2) the government of a foreign country of concern has a controlling interest in the entity; or (3) the entity is organized under the laws or has its principal place of business in a foreign country of concern Section 287.138(2) (a)-(c), Fla. Stat. (2023), under Chapter 2023-33, Laws of Florida.

IN WITNESS OF THE FOREGOING, the parties have set their hands and seals the day and year first written above.

CITY OF OPA-LOCKA

ATTEST:

BY:

APPROVED AS TO FORM

Burnadette Norris-Weeks, P.A.
City Attorney

CONTRACTOR

WITNESSES:

Owen Carney

Owen Carney

Mary Adams

ATTEST:

SECRETARY

STATE OF FLORIDA)
) SS:
COUNTY OF MIAMI-DADE)

BEFORE ME, an officer duly authorized by law to administer oaths and take acknowledgments, personally appeared Mary Adams as CEO of The Employee Relations Group LLC, a Florida corporation, and acknowledged executed the foregoing Agreement as the proper official of The Employees Relations Group LLC, for the use and purposes mentioned in it and affixed the official seal of the corporation, and that the instrument is the act and deed of that corporation.

IN WITNESS OF THE FOREGOING, I have set my hand and official seal at in the State and County aforesaid on this 18 day of December, 2023.

NOTARY PUBLIC

My Commission Expires:

MARIELISA GOMEZ
Notary Public-State of Florida
Commission # HH 179384
My Commission Expires
September 26, 2025

See attached document for Exhibit "A"

(Response to Request for Qualifications)

eBid Response

Add Response

Bid Identifier: RFQ-23-1107100-0-2024/JB

Supplier

Date

Circle Strategies, Inc.
Responded Date : 11/07/2023

Altrian, Inc
Responded Date : 11/07/2023

The Employee Relations Group
Responded Date : 11/07/2023

KDG Support LLC
Responded Date : 11/07/2023

Diskriter Inc.
Responded Date : 11/01/2023

Supplier Details

Edit eBid Response | View History

Supplier Name	The Employee Relations Group
Address	401 E. Las Olas Blvd Suite 130-162, Fort Lauderdale, Florida 33301
Phone Number	954-980-7874
Self Declarations	African American Owned, Small Business, Woman Owned
Bid Response Date	11/07/2023 11:50 AM Eastern
Bid Amount	$266,400.00
Response Status	Complete

Required Documents

Download Entire Bid Package

- ✓ Bid Document(Electronic/Online)
- ✓ Certificate of Insurance(Electronic/Online)
- ✓ W-9 form(Electronic/Online)
- ✓ Drug Free Workplace Certification(Electronic/Online)
- ✓ Non-Collusive Affidavit(Electronic/Online)
- ✓ Sworn Statement on Public Entity Crimes(Electronic/Online)
- ✓ Permits and Licenses(Electronic/Online)

Supplemental Documents

- ✓ Non-Discrimination Affidavit(Electronic/Online)

3.2.1 - COVER PAGE

RFQ NO: 23-1107100
REQUEST FOR QUALIFICATIONS (RFQ)

CITY OF OPA-LOCKA
RFQ NO. 23-TBA
OUTSIDE ENTITY HUMAN RESOURCES DIRECTOR

PROPOSAL'S

FIRM NAME:	The Employee Relations Group
ADDRESS:	401 E Las Olas. Blvd. Suite #130-162
	Fort Lauderdale, FL 33301
CONTACT NAME:	Mary Adams
DATE:	November 6, 2023
PROPOSAL NUMBER:	RFQ NO: 23-1107100
PROPOSAL DESCRIPTION:	Outside Entity Human Resources Director

3.2.2 Tab 1 - Table of Contents

Subject		Page
3.2.1	**Cover Page**	1
3.2.2	**Tab 1 – Table of Content**	2
3.2.3	**Tab 2 – Letter of Transmittal**	4
3.2.3.1	Limit to one or two pages.	4
3.2.3.2	Briefly state the Proposer's understanding of the work to be done and a positive commitment to perform the work.	4
3.2.3.3	Names of the persons who will be authorized to make representations for the Proposer during the Agreement as the City contact, their titles, addresses, and telephone numbers.	4
3.2.3.4	An official signature of a Corporate Officer.	4
3.2.4	**Tab 3 – General Information**	5
3.2.4.1	Name of Business.	5
3.2.4.2	Mailing Address and Phone Number.	5
3.2.4.3	Names and contact information of persons to be contacted for information or services if different from the name of the person in charge.	5
3.2.4.4	Normal business hours.	5
3.2.4.5	State if the business is local, national, or international and indicates the business's legal status (corporation, partnership, etc.)	5
3.2.4.6	The business was organized and/or incorporated, and where.	5
3.2.4.7	The location of the office from which the work is to be done and the number of professional staff employees at that office.	5
3.2.4.8	Indicate whether the business is a parent or subsidiary in a group or firms/agencies.	5
3.2.4.9	State if the business is licensed, permitted, and/or certified to do business in the State of Florida, attach a copy .	5
3.2.5	**Tab 4 – Project Approach**	7
	Describe in detail the proposal to fulfill the requirements of the scope of services listed in section 2.2 of this RFQ.	7
3.2.6	**Tab 5 – Experience and Qualifications**	8
3.2.6.1	Specify the number of years the Proposer has been in business.	8
3.2.6.2	Identify the Proposer's qualifications to perform the services identified in this RFQ as listed in section 2-2 of the Scope of Services .	8
	Include resumes, not exceeding one page each, of all key personnel who will be assigned to the City for this project.	9
3.2.7	**Tab 6 – Schedule**	12
3.2.7.1	Include a timetable that identifies the amount of time required to complete each component, best of knowledge.	12
3.2.7.2	Indicate the earliest available start date for Proposer's project team.	13
3.2.7.3	Indicate the project completion date based on 3.2.7.1	13
3.2.8	**Tab 7 - Pricing of Services**	14
3.2.8.1	The projected Fee base should be an all-inclusive base fee.	14
3.2.9	**Tab 8 – References**	15
3.2.9.1	List a minimum a minimum of three references in Florida for which the Proposer has provided services detailed on the solicitation. Include the name of the organization, a brief description of the project, the name of the contact person telephone, and email address.	15

3.2.9.10	**Tab 9 – Additional Forms**	18
	Proposer must complete and submit as part of its Proposal all of the following forms and/or documents.	18
	A. Proposer Qualifications	19
	B. Certification regarding debarment and suspension	22
	C. Drug Free Workplace certification	23
	D. E-Verification	25
	Contractors Occupational License in the business area	27
	City of Fort Lauderdale Business Permit	28

3.2.3 Tab 2 – Letter of Transmittal

3.2.3.1 Limit to one or two pages.

3.2.3.2 Briefly state the Proposer's understanding of the work to be done and a positive commitment to perform the work.

The Proposer understands the work to be done primarily includes the Proposer's need to utilize their knowledge, skills, and abilities to efficiently, effectively, and thoroughly:

- ✓ Perform professional Human Resources duties as required by the City Ordinances.
- ✓ Assist with employee relations and disputes.
- ✓ Create, update, and implement HR employment policies, procedures, and forms.
- ✓ Provide support and manage all stages of the employment cycle: recruiting, onboarding, disciplinary, and termination.
- ✓ Develop and implement recruitment strategies to include scoring mechanisms, including that role of City Manager.
- ✓ Perform compensation study to include benchmark classifications.
- ✓ Consistently work within legal compliance of Human Resources best practices and the City Ordinances.

The Proposer is looking forward to the opportunity to fulfill this opportunity. The Proposer will consistently work on-site at least one day of the week, for no less than six hours per day. Monday through Friday the Proposer will be available from 9:00am to 6:00pm and respond to emails within 23-hours each business day.

3.2.3.3 Names of the persons who will be authorized to make representations for the Proposer during the Agreement as the City contact, their titles, addresses, and telephone numbers.

a. Contact Name: Mary Adams
   Title: CEO & Principal HR Consultant
   Address: 401 E. Las Olas Blvd., #130-62, Fort Lauderdale, FL 33301
   Phone, Office: (954) 980-7874
   Phone Mobile: (408) 646-9820
b. Contact Name: Klaus Roithner
   Title: Executive VP & CFO
   Address: 401 E. Las Olas Blvd., #130-62, Fort Lauderdale, FL 33301
   Phone, Office: (954) 980-7874
   Phone Mobile: (408) 812-7300

3.2.3.4 An official signature of a Corporate Officer.

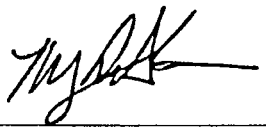

Mary Adams CEO – The Employee Relations Group

11/6/2023
Date

3.2.4 Tab 3 – General Information

3.2.4.1 Name of Business

The Employee Relations Group

3.2.4.2 Mailing Address and Phone Number

401 E. Las Olas Blvd. Suite #130-162 Fort Lauderdale, FL 33301
Office (954) 980-7874

3.2.4.3 Names and contact information of persons to be contacted for information or services if different from the name of the person in charge

Name is not different. It is: Mary Adams office (954) 980-7874

3.2.4.4 Normal business hours

They are: 9:00am through 6:00pm; Monday through Friday

3.2.4.5 State if the business is local, national, or international and indicates the business's legal status (corporation, partnership, etc.)

State business is a local Florida corporation

3.2.4.6 The business was organized and/or incorporated, and where

The business was incorporate in 2011 in the state of Florida and Broward county.

3.2.4.7 The location of the office from which the work is to be done and the number of professional staff employees at that office

The location the work will be done is in Fort Lauderdale, FL 33301. The number of employees that will fulfill the Agreement will total 2.

3.2.4.8 Indicate whether the business is a parent or subsidiary in a group or firms/agencies

The business is its parent company

3.2.4.9 State if the business is licensed, permitted, and/or certified to do business in the State of Florida, attach a copy

A copy A copy of the Florida Business License is attached.

State of Florida
Department of State

I certify from the records of this office that THE EMPLOYEE RELATIONS GROUP LLC is a limited liability company organized under the laws of the State of Florida, filed on November 8, 2011, effective January 1, 2012.

The document number of this limited liability company is L11000127406.

I further certify that said limited liability company has paid all fees due this office through December 31, 2023, that its most recent annual report was filed on January 5, 2023, and that its status is active.

Given under my hand and the Great Seal of the State of Florida at Tallahassee, the Capital, this the Fifth day of January, 2023

Secretary of State

Tracking Number: 8172791153CC

To authenticate this certificate,visit the following site,enter this number, and then follow the instructions displayed.

https://services.sunbiz.org/Filings/CertificateOfStatus/CertificateAuthentication

3.2.5 Tab 4 – Project Approach

Describe in detail the proposal to fulfill the requirements of the scope of services listed in section 2.2 of this RFQ

It is the goal of the Proposer to utilize all of her knowledge, skills, and abilities acquired during the more than 21 years of loving HR work to bring a level of expertise to the City of Opa-Locka's HR department. My way of working is to teach managers the entire time I am communicating with them. I do the same with employees, I explain policies to them at a level and use examples that they can relate to.

3.2.6 Tab 5 – Experience and Qualifications

3.2.6.1 Specify the number of years the Proposer has been in business (see below)

3.2.6.2 Identify the Proposer's qualifications to perform the services identified in this RFQ as listed in section 2-2 of the Scope of Services
Include resumes, not exceeding one page each, of all key personnel who will be assigned to the City for this project

The Proposer's qualifications include over 20 years of prior experience in HR Director and Manager roles with large corporations. Including, IBM Corp., Dell Corp., Google, and Bertelsmann. The roles included establishing new HR departments, drafting HR documents, management training, HR compliance, recruiting, hiring, firing, disciplinary action meetings, salary surveys, and conducting annual performance appraisals. Utilizing training in HR, Six Sigma, Lean Manufacturing, and Safety Compliance as an HR Generalist expert. Providing one-stop HR support for hundreds of employees from the executive level to the facilities level staff in the areas of FMLA, ADA, Unemployment, Benefits Enrollments and implementing, ERISA, wage and hour questions, disciplinary actions, annual appraisal process performing salary surveys, conducted workplace investigations and enforced HR policies and procedures.

These prior roles with large corporations, along with the Proposer acquiring a Juris Doctorate in 2009, have added to her knowledge, skills, and ability to be the expert her clients need as their Outside HR Director expert since 2012 (11 years). The Proposer consistently provides HR support to about 200 employees among the numerous clients. The largest percentage of the Proposer's clients are in Miami-Dade and Broward Counties.

The Proposer believes in maintaining her expertise by continuing personal education and training: Attending three remote training classes per month.

Annual recertification of her EEOC Workplace Investigator Certification by attending eight-plus hours of EEOC-approved Investigative Training.

Obtained certification as a Human Resources Expert Witness in 2019. Assisting plaintiffs and defendant attorneys to win Employment Law related cases.

Proposer's one-page resume is attached for Mary Adams – Owner & Principal HR Consultant.
Key personnel one-page resume is attached for Klaus Roithner – Exec. VP & CFO
Key personnel one-page resume is attached for Sharon Morais – HR Generalist

THE EMPLOYEE RELATIONS GROUP®

Mary Adams, JD
Principal Consultant - Owner
The Employee Relations Group® LLC

Knowing the financial impact Small Businesses can incur from lack of training in employment practices and business compliance, drove Mary to the next goal of her career, Principal Consultant of her own business, The Employee Relations Group® TERG® to support Small Businesses in all areas of Human Resources and Employment Law compliance. Serving commercial and non-profit clients in all industries throughout Broward, Miami-Dade and West Palm Beach Counties, plus internationally, Canada and Ireland. The firm brings employers into compliance in the areas of: recruiting, handbook, training, postings, terminations, payroll, expense reporting, and others. Then TERG provides client support, from their mobile office, on an as-needed basis with training, difficult employee relations matters and risk assessment on disciplinary actions and terminations. The firm now has clients throughout most South Florida counties.

Previously as Global Human Resources Generalist, Mary worked 15+ years in the technology industry, for: IBM Corporation, Google, Dell Computer and Start-Up companies. She found her passion for, human resources and business management while supporting up to 500 employees at international, regional and branch locations in California, Texas, Nevada, Kentucky, Alaska, Florida, Washington, Colorado, Massachusetts, Louisiana, Canada and Ireland.

Mary's Education includes: Juris Doctor 2009; Supreme Court Certification of Mediation, JFK University College of Law; Undergraduate: Louisiana State University; Southern University and Western Illinois University.

Professional Membership: Society of Human Resource Management; Fort Lauderdale Chamber of Commerce; American Business Women Association; Women Executive Council; Women Executive Leadership; and Tower Club of Fort Lauderdale.

Volunteer Activities: Meals on Wheels of South Florida, Board Chair; Fort Lauderdale Board of Governors, Board Member; Riverwalk Trust, Board Member; Children Diagnostics and Treatment Center, Transformer Committee; Greater Fort Lauderdale Chamber of Commerce, Member; Leadership Broward Foundation, Class XXXI and Women Leading Broward Foundation, CoFounder.

The Employee Relations Group®, LLC "TERG®" 401 E. Las Olas Blvd. Suite 130-162, Fort Lauderdale, FL 33301
(p)+1-954-980-7874 (f) +1-954-406-5498 (m) +1-408-646-9820 (e) Mary@TERG.com (web) www.TERG.com

THE EMPLOYEE RELATIONS GROUP®

Klaus Roithner
Executive VP / CFO – Co-Owner
The Employee Relations Group® LLC

I'm the EVP/CFO and Co-Owner of the local Human Resources and Employment Compliance Consulting Firm - **The Employee Relations Group® (TERG®).**

For 12 years now, as the EVP/CFO of TERG, I'm taking care of the activities "behind the scenes." IT, finance, transportation, media, word processing, accounting, and data analysis are my main areas. Together with Mary Adams, the Principal Consultant, I'm working on Company roadmaps and expansion plans. All TERG employees and contractors report to me.

In my over 25 year professional career, I gained an experience level spanning over a wide field of professions. After starting in Quality Control, I moved to Manufacturing, Human Resources, and Technology Development. In all those areas, I was promoted into Management Positions, mainly into a Director or similar levels.

I also learned about different Industries like food, microchips, solar cells, and nanotechnology. Companies I worked for included small startups like FlexIC's, NanoNexus, large Corporations like Siemens/Infineon, or joint ventures between companies like IBM, Motorola, and Toshiba.

After a successful corporate career, I decided to start my own business. Together with Mary, our Principal Consultant, I'm now using my experience to develop, excel, and operate The Employee Relations Group. In his free time, Klaus enjoys watching Formula1 races and working if time permits, as a freelance Formula1 analyst.

The Employee Relations Group®, LLC "TERG®" 401 E. Las Olas Blvd. Suite 130-162, Fort Lauderdale, FL 33301
(p)+1-954-980-7874 (f) +1-954-406-5498 (m) +1-408-646-9820 (e) Mary@TERG.com (web) www.TERG.com

Resume

Sharon Morais
430 NW 40th Street
Oakland Park, FL 33309

Apr 2021 - Present
Human Resources Manager
Marriott International
Fort Lauderdale, Florida

Jul 2016-Apr 2021
Representative Marriott Hotels Florida

Jan 2016 – Jul 2016
Human Resources Generalist
Renaissance Hotels
Greater Nashville Area, TN

Nov 2012 – Jan 2016
Human Resources Coordinator
Gaylord Hotels
Greater Nashville Area, TN

Apr 2011 – Nov 2012
Guest Service Agent
Gaylord Entertainment Company
Greater Nashville Area, TN

3.2.7 Tab 6 – Schedule

3.2.7.1 Include a timetable that identifies the amount of time required to complete each component best of knowledge.

To fulfill the responsibilities of the HR Director role, it is important to outline a timeline for the following areas:

Month 1 –

Meet with the City Manager and other stakeholders to gather their perspectives of the HR department's goals and challenges.

Open Legal HR Issues –

Review any open legal issues or claims outstanding with government agencies to ensure the responses are up to date.

Familiarize myself with the City Ordinances, policies, systems, culture, and employees.

Start reviewing all HR-related contracts and agreements for compliance and performance.

Recruiting –

Usually, this is a necessary issue that needs to be addressed. Other than the City Manager's vacancy, meet with the City Manager and other decision-makers to create a recruitment plan for open vacancies, including determining the HR department headcount. Review the current full-cycle interview process for improvements as needed.

If the role starts before the end of the year. Determine what year-end policies HR has to deal with to close out the year.

Start to Audit the HR department's compliance with applying policies and procedures, specifically to workplace accommodations/ADA, Workers' Compensation, FMLA, Classifications, Job Descriptions, E-Verify, I-9, and other areas.

Months 2 – 3

Complete the HR Audit –

Draft a report to include risk assessments, improvement needed and an action plan to accomplish them. Review if goals established in the first month need to be realigned based on the Audit results.

Start review of All job description for revisions, as needed.

Complete the review of all HR related contracts and agreements for compliance and performance. Prepare a report for the City Manager and action plan, as needed.

Stakeholder Regular Meetings –

Schedule regular meetings and/or attend existing meetings to present reports related to HR efforts, recruiting and other matters as applicable.

HR Expectations –

Establish a set of expectations with the decision makers for request from HR. Establish expectations for questions and inquiries.

Employee Training, Development, Retention, On-boarding –

Review the employee training and development efforts.

Review the On-boarding of new hires and Off-boarding voluntary and involuntary terminations. Review the process for talent acquisition, development and retention for improvements.

Development of a set of plans to present. Consider an Exit Interview process.

Months 3-4
The completion of plans listed within months 1 and 2 are being seen and continuing to be executed.

Performance management –
Address identified issues affecting employee satisfaction. Consider a wellness program.

Provide training to management on performance feedback and reviews. Consider a 360-degree feedback system.

Continue to monitor and update the HR compliance and reporting to external agencies.

Recruiting –
Scrutinize the efforts and results of recruiting for the continuing need of improvements.

Months 5-6 –
Present updated policies and procedures for final approval from the Months 1 & 2 Audits.

Show progress on completing all employe job description review and revisions as needed.

Employee Engagement –

Spend some time finding out about the employee culture and how to improve it from the HR department contributions.

Continue to monitor the effectiveness of HR initiatives and make adjustments as needed.

Months 7-9 –
Determine if a salary survey is needed, based on recruiting results and employee retention.

Continue to complete and report on challenges and results of goals from prior months expectations.

Months 10-12 –
Focus will be on completing all prior months of goals and expectations.

Prepare necessary year end HR department reports to meet regulations and the HR Director goals and attainment.

3.2.7.2 Indicate the earliest available start date for Proposer's project team

The earliest available start date for Proposal's project team is November 27, 2023. Proposal already has vacation plans that include airline tickets from Nov. 14-21-23 and Dec. 21st through Jan.5th.

3.2.7.3 Indicate the project completion date based on 3.2.7.1

Completion date – HR has no end date as long as there are employees. I will set my goal to have the completion of the foals and expectations agreed upon and at an acceptable level by Dec. 27, 2024.

3.2.8 Tab 7 - Pricing of Services

3.2.8.1 The projected Fee base should be an all-inclusive base fee

The projected fee is an all-inclusive base fee at a flat hourly consultant rate of $185.00 per hour x 24 hours per week = $4,440.00 per week, $17,760.00 per month = 12 months = $213,120.00 per year.

3.2.9 Tab 8 – References

3.2.9.1 List a minimum a minimum of three references in Florida for which the Proposer has provided services detailed on the solicitation. Include the name of the organization, a brief description of the project, the name of the contact person, telephone and email address

1. Company Name: Blue Trading US
Location: Miami, FL 33178
Contact Name: Alfredo Alvarado – CEO
Contact Mobile Number: (305)767-9286
Contact Email: alvarado@bluetradingus.com
Active client since 2013

Brief description of services provided – Fulfill the role of an external HR Consultant and Compliance Officer. Draft, implement and update all HR documents, including Employee Handbook, for On-boarding and Off-boarding, draft job descriptions, establish employee classifications, conduct salary and benefit surveys and continue to align wages to be competitive. Counsel the organization prior to all involuntary terminations to review liabilities and conduct a risks analysis. Respond to all inquiries from employee legal counsel.

Conduct Safety, Harassment and Sensitivity training. Train supervisor and managers how to conduct interviews, disciplinary action meetings, document acceptable and unacceptable employee behavior. Conduct hybrid workplace investigations on site and remote. Include investigative report and risk analysis with recommendations and suggestions for improvements with internal processes and from the employee, as applicable. Communicate and represent the company in meetings with all government agencies to ensure compliance and proper responses, including, DEO, OSHA, EEOC, DOL, and Wage and Hour. Respond to all inquiries from employee legal counsel.

2. Company Name: The Pride Center At Equity Park
Company Location: Wilton Manors, FL 33305
Contact Name: Robert Boo – President
Contact Mobile Number: (954)463-9005
Contact Email: rboo@pridecenterflorida.org
Active client since 2017

Brief description of services provided – Fulfill the role of an external HR Consultant and Compliance Officer. Draft, implement and update all HR documents, including Employee Handbook, for On-boarding and Off-boarding, draft job descriptions, conduct salary and benefit surveys and continue to align wages to be competitive. Review background checks that require additional communication to the applicant, conduct that communication.

Conduct semi-annual Harassment and Sensitivity training. Train supervisor and managers how to conduct interviews, disciplinary action meetings, document acceptable and unacceptable employee behavior. Conduct hybrid workplace investigations on site and remote. Include investigative report and risk analysis with recommendations and suggestions for improvements with internal processes and from the employee, as applicable.

Counsel the organization prior to all involuntary terminations to review liabilities and conduct a risks analysis. Respond to all inquiries from employee legal counsel.

3. Company Name: MH3 Management LLC
Company Location: Boca Raton, FL 33487
Contact Name: Melissa Hilf – COO & Comptroller
Contact Mobile Number: (954)415-6183

Contact Email: Melissa.hilf@mh2management.com
Active client since 2017

Brief description of services provided for a combined two separate companies – Fulfill the role of an external HR Consultant and Compliance Officer. Draft, implement, and update all HR documents, including Employee Handbook, for On-boarding and Off-boarding, draft job descriptions, correct employee classifications, conduct salary and benefit surveys and continue to align wages to be competitive. Conduct the first interview to vet applicant's skills. Conduct background checks.

Counsel the organization prior to all involuntary terminations to review liabilities and conduct a risks analysis. Respond to all inquiries from employee legal counsel. Assisted client with a sale and employee merger and transition.

Train supervisor and managers how to conduct interviews, disciplinary action meetings, document acceptable and unacceptable employee behavior. Conduct hybrid workplace investigations on site and remote. Include investigative report and risk analysis with recommendations and suggestions for improvements with internal processes and from the employee, as applicable. Final review of all communication and represent the company in meetings with all government agencies to ensure compliance and proper responses, including, DEO, OSHA, EEOC, DOL, and Wage and Hour. Respond to all inquiries from employee legal counsel.

4. Company Name: SW Corp
Company Location: Miami, FL 33142
Contact Name: Humberto Tapia – Senior Accountant
Contact Mobile Number: (305) 333-3941
Contact Email: htapia@swcorp.com
Active client since 2023

Brief description of services provided for a total of three separate companies at one location. Fulfill the role of a hybrid HR Consultant and Compliance Officer. Worked on site at least three days per week for four months. Review and update all HR documents, including Employee Handbook, for On-boarding and Off-boarding, draft job descriptions, correct employee classifications, conduct salary and benefit surveys, and continue to align wages to be competitive. Counsel the organization prior to all involuntary terminations to review liabilities and conduct a risk analysis. Respond to all inquiries from employee legal counsel. Review all HR-related Agreements and Contracts, and negotiate better rates. Built an internal employee HR communication system with documents within the ADP system and through one-stop telephone numbers. Established 360-degree annual performance appraisals. Review appraisals with management prior to employee meetings.

Completed the company's implementation to the ADP payroll system. Train supervisors and managers on how to apply policies to draft and conduct disciplinary action meetings; how to document acceptable and unacceptable employee behavior. Conduct workplace investigations with investigative reports and risk analysis with recommendations and suggestions for improvements with internal processes and from the employee, as applicable. Communicate and represent the company in meetings with all government agencies to ensure compliance and proper responses, including DEO, OSHA, Workers' Compensation, EEOC, DOL, and Wage and Hour. Respond to all inquiries from employee legal counsel.

5. Company Name: The Mosaic Group
Company Location: West Palm Beach, FL 33407
Contact Name: Ann Marie Sorrell – CEO

Contact Mobile Number: (561) 531-4046
Active client since 2017

Brief description of services provided for a combined two separate companies – Fulfill the role of an external HR Consultant and Compliance Officer. Draft, implement and update all HR documents, including Employee Handbook, for On-boarding and Off-boarding, draft job descriptions, establish employee classification, conduct salary and benefit surveys and continue to align wages to be competitive. Conduct the first interview to vet applicant's skills. Conduct background checks.
Counsel the organization prior to all involuntary terminations to review liabilities and conduct a risks analysis. Respond to all inquiries from employee legal counsel. Assisted client with a sale and employee merger and transition.

Train supervisors and managers how to conduct interviews and disciplinary action meetings and document acceptable and unacceptable employee behavior. Conduct hybrid workplace investigations on-site and remotely. Include investigative report and risk analysis with recommendations and suggestions for improvements with internal processes and from the employee, as applicable. Final review of all communication and represent the company in meetings with all government agencies to ensure compliance and proper responses, including DEO, OSHA, EEOC, DOL, and Wage and Hour. Respond to all inquiries from employee legal counsel.

6. Company Name: FAENA Hotel
Company Location: Miami Beach, FL 33140
Contact Name: Vanessa Girard – Quality & Training Manager
Contact Mobile Number: (305) 534-8800
Email Address: vgirard@faena.com
Active client since 2021

Conduct compliant Harassment, Sensitivity & DEI Training to all employees, annually. Draft and update the training modules.

3.2.10 Tab 9 – Additional Forms

Proposer must complete and submit as part of its Proposal all of the following forms and/or documents.

A. Proposer Qualifications
   Resume attached and see below
B. Certification regarding debarment and suspension
   Attached
C. Drug-Free Workplace certification
   Attached
D. E-Verification
   Attached

In addition to the attached Resume –

The Proposer's qualifications include over 20 years of prior experience as an HR Director and Manager roles with several large corporations. Including, IBM Corp., Dell Corp., Google, and Bertelsmann. The roles included establishing new HR departments, drafting HR documents, training, HR compliance, recruiting, hiring, firing, disciplinary action meetings, salary surveys, conducting annual performance appraisals. Utilizing training in HR, Six Sigma, Lean Manufacturing, and Safety Compliance as an HR Generalist expert. Providing one-stop HR support for hundreds of employees in the ares of FMLA, ADA, Unemployment, Benefit Enrollments and implementing, ERISA, wage and hour questions, disciplinary actions, annual appraisal process perform salary surveys, conducted workplace investigations and enforced HR policies and procedures.

These prior roles with large corporations along with the Proposer acquiring a Juris Doctorate, in 2009, has added to her knowledge, skills and ability to be the expert her clients need as their Outside HR Director expert since 2012. The Proposer consistently provide HR support to about 200 employees among the numerous clients. The largest percentage of the Proposer's clients are in Miami-Dade and Broward Counties.

The Proper believes in maintaining her expertise by continuing personal education and training: Attending three remote training classes per month.

Annual recertification of her EEOC Workplace Investigator Certification by attending eight plus hours of EEOC approved Investigative Training.

Obtained certification as a Human Resources Expert Witness in 2019. Assisting plaintiffs and defendant attorneys to win Employment Law related cases.

THE EMPLOYEE RELATIONS GROUP®

Mary Adams JD
Principal Human Resources Consultant
Fort Lauderdale, FL 33301
954.980.7874 office 408.646.9820
mobile mary@terg.com
LinkedIn URL: https://www.linkedin.com/in/mary-adams-jd/

SUMMARY OF CV –

HUMAN RESOURCES BUSINESS ACUMEN

RISK DETECTION and MITIGATION – Apply employee and labor relations expertise to successfully identify trends and challenges, predict and mitigate risk, and develop and execute solution-focused strategies and programs.
FINANCIAL ACUMEN – Competent in understanding financial statements and the overall financial, preparing and managing P/L across businesses. Confident to interpret financial metrics and calculate the financial impact of HR decisions. Capable of building the economics of an HR business case.
CRISIS MANAGEMENT – Work reactively on crisis-oriented partner issues under extreme time limitations while exercising excellent judgment and leadership.
PROJECT MANAGEMENT – Independently design, own, and lead successfully large-scale, network-wide projects that improve frontline partner experience.
ANALYZE and INTERPRET DATA – Exercise strong analytical skills using data and anecdotes to develop persuasive narratives and recommendations; demonstrated ability to define and measure success of programs.
DELIVER INNOVATIVE BUSINESS SOLUTIONS – Challenge current practices, industry status quo, and generate creative mechanisms that bring about large-scale solutions.
COMMUNICATE EFFECTIVELY – Rapidly produce high-quality written communications that concisely analyze problems and move solutions from concept to execution.
LEAD THROUGH OTHERS – Build constructive relationships with critical stakeholders and peers to share information, influence change, and leverage resources to deliver results.
PROBLEM SOLVER – Work independently with minimal supervision, in ambiguous situations, and persevere over internal and external barriers to drive resolutions. Preserve confidentiality of sensitive information. Exert, when required, the correct amount of firm but thoughtful communications on behalf of client.
MERGERS AND ACQUISITIONS – Serves as HR lead on M&A team meetings and partners with other HR organizations and Leaders in on due diligence and analysis to ensure all HR efforts are coordinated and operational HR risks are identified and addressed during due diligence and integration.
WORKPLACE INVESTIGATOR/Employee Relations – Conduct complex investigations into sensitive employee relations & EEO complaints of discrimination, harassment, and other workplace complaints in an efficient, thorough, and professional manner. Identify investigation scope, sources, and investigative actions. Plan, schedule, and conduct effective interviews of complainants, respondents, and witnesses. Interviews witnesses at all levels of the organization using appropriate tact and impartiality. Analyze information collected from witnesses and evidence and reach timely and unbiased conclusions and findings. Provide practical, problem solving, even-handed solutions while serving as a trusted and confidential resource within the human resources team. Prepare thorough, professional reports of human resource, EEO, or personnel matters, including review of policy violations, performance, and/or conduct concerns. Compose correspondence and other highly confidential documents such as investigation summaries, corroboration charts, action plans, conclusion talking points, executive scripts, etc. Provide sound technical and practical advice and guidance to administration and managers on employee relations matters, employee concerns, and workplace initiatives. Prepare and maintain accurate logs, complete reports and other documentation relating to investigations. Maintain confidentiality and organization of files of investigations conducted and information received. Conduct training sessions on employee relations topics which may include the preparation of presentations, and handouts on sample cases and workplace initiatives.
EXPERT WITNESS – Prepare expert witness documentation and testimony in court on employment and labor relation cases.
BUSINESS PROJECT MANAGER – On behalf of employer, three time, I have singularly represented them to close a business location for various reasons (e.g. my audit showed embezzlement, location not profitable, employer lost only contract supporting the location, etc.). Prepared close out letters for all employees that explained the company location closing and their payout compensation. Met with employees and presented closing plans. Closed all business accounts with all vendors, negotiated the Landlord Rental Agreement to the advantage of the client. Closed DOL and State Business Registration and Tax accounts. Donated furniture, paid out utility accounts and arranged for final cleaning of offices.

HUMAN RESOURCES GENERALIST EXPERIENCE – Deliver HR initiatives to support business needs, such as: employee engagement, management development, and organizational change in line with best practices. Guide and coached supervisors and managers on employee relations and HR issues in line with Company policies and best practice, including disciplinary, grievance, performance, redundancy and absence management. Provide support other roles within HR teams as required with other projects and operational issues, e.g. recruitment, payroll, benefits/leave training and HRIS.

Timely investigate all employee relations incidents, draft reports and seeks resolution, maintain the Employee Relation log. Utilize modes of communication i.e. Coffee Talk, Employee Engagement Committees, Suggestion Box, PodCasts, and Surveys to identify change management, discuss best HR practices and develop interventions. Partner with HR Lead to identify and deliver HR related training as required. Support, develop, and coach business supervisors and managers in relation to their approach and consideration of people issues, ensuring that they understand the impact of these on the individual and the business. Work with HR leads to support operations with the salary review process guidelines. Champion the accuracy of HR Data by driving stakeholders in the timely resolution of action items related to employee records. Promotes the use of HR systems policies and processes, challenging appropriately as necessary. Support the exit review process for staff, carrying out exit interviews etc. **SYSTEM AND DATABASE skills:** MS Excel, PowerPoint and Report Smith, PC Payroll, Paychex, Peoplesoft, Resumix, Oracle, E-Verify, ISO auditing, Halogen, Six Sigma processes, ISO 9000.

CHRONOLOGICAL LIST OF WORK HISTORY –

The Employee Relations Group (TERG)
Principal IHR Consultant - Remote
Fort Lauderdale, FL
August 2010 - present

Company description: TERG is a boutique Human Resources and Employment Law compliance consulting firm providing Consulting compliance to over 65 diverse business models throughout 9 states and 3 countries worldwide. Each consultant owns the client and provides a high level of HR Generalist support for an indefinite period of time. Primary support and auditing are done remotely and Training is done on-site and remotely, including support for employees working 24/7 and various shifts.

TERG
Expert Witness/Consultant (part-time & on-call)
Nationwide
March 2011 - Present
Perform consulting and/or litigation consulting and expert witness services in the areas of human resources, as needed.

Rainin Instrument LLC a Mettler Toledo Company
Corporate HR Manager
Oakland, CA
June 2008-August 2010

Company description: Mettler Toledo is a multinational manufacturer of scales and analytical instruments. It is the largest provider of weighing instruments for use in laboratory, industrial, and food retailing applications. The company also provides various analytical instruments, process analytics instruments, and end-of-line inspection systems.

Google/Arvato Digital Services a Bertelsmann Company
Google Human Resources Business Partner
Mountain View, CA
June 2007-March 2008

Company description: Google is an American multinational technology company that specializes in internet-related services and products. These include online advertising technologies, search, cloud computing, software, and hardware.

Company description: Bertelsmann is a German multinational corporation based in Germany. It is one of the world's largest mass media companies and also active in the service sector and education. Google hired Arvato,

Court Mediator - Internship
Intern 20 hours per week
Pittsburg, CA
October 2005-May 2007

Contra Costa County Courts - Assist Plaintiffs and Defendants in Small Claims Court Lawsuits and Disputes.

Law Student-Full-Time
University Silicon Valley School of Law
Fremont, CA
January 2005-May 2009

Human Resources Consultant
San Francisco & SiliconValley Regional HR Generalist - Remote
June 1996 - December 2004

Business model: Utilize extensive Human Resources generalist expertise to assist technology companies with recruiting, compensation and relocation plans, establish HR department policies and procedures for legal compliance. Train management staff in interviewing and disciplinary compliance.

Client locations: N. Calif.; San Fran Area; Minn.; Texas; Companies Contracted and worked for:
(1) Dell Computer (2) Shell Oil (3) PeoplePC (4) Cisco System (5) Meir Mitchell Accounting Firm (6) Pervasive Software (7) U.S. Office of Personnel (8) GreyLock VC Firm (9) Anila VC Firm.

IBM Corporation — Seattle, WA and Austin, TX
National Field Support Representative 30% travel — May 1989 - November 1996
Remote support to clients in CA, FL, NV, UT and AK
Seattle, WA and Austin, TX
May 1989 - November 1996

Company description: IBM Corporation manufactures and markets computer hardware, middleware and software, and offers hosting and consulting services in areas ranging from mainframe computers to nanotechnology. IBM is also a major research organization, holding the record for most patents generated by a business (as of 2017) for 24 consecutive years.

Education:
Certified EEO Investigator, 2019
Jurist Doctorate, JD Law Degree, 2009
Supreme Court Certified Mediator, 2007
Louisiana State University, Major: Finance/Computer Science
Southern University, Major: Business
Western Illinois University, Major: Business
Harvard University T.H. Chan School of Public Health Executive & Continuing Professional Education Certificate - 2018 Women On Boards & Adding Value

Community involvement and volunteerism/current:
Tower Club/Club Corp. – Professional Women's Luncheon – Founder
Business & Leadership Institute – Human Resources Trainer
Women Leading Broward Program – Founder & Facilitator
Riverwalk Trust – Board member
Children Diagnostic and Treatment Center – Transformer
Meal On Wheels South Florida – Board member

CITY OF OPA-LOCKA

CERTIFICATION REGARDING DEBARMENT, SUSPENSION
PROPOSED DEBARMENT AND OTHER MATTERS OF
RESPONSIBILITY

1. The Proposer certifies, to the best of its knowledge and belief, that the Proposer and/or any of its Principals:

A. Are not presently debarred, suspended, proposed for debarment, or declared ineligible for the award of contracts by any Federal agency.

B. Have not, within a three-year period preceding this offer, been convicted of or had a civil judgment rendered against them for: commission of fraud or a criminal offense in connection with obtaining, attempting to obtain, or performing a public (Federal, state, or local) contract or subcontract; violation of Federal or state antitrust statutes relating to the submission of offers; or commission of embezzlement, theft, forgery, bribery, falsification or destruction of records, making false statements, tax evasion, or receiving stolen property; and

C. Are not presently indicted for, or otherwise criminally or civilly charged by a governmental entity with, commission of any of the offenses enumerated in paragraph 1-B of this provision.

2. The Proposer has not, within the three-year period preceding this offer, had one or more contracts terminated for default by any City, State or Federal agency.

A. "Principals," for the purposes of this certification, means officers; directors; owners; partners; and persons having primary management or supervisory responsibilities within a business entity (e.g., general manager; plant manager; head of a subsidiary, division, or business segment, and similar positions). This Certification Concerns a Matter Within the Jurisdiction of an Agency of the United States and the Making of a False, Fictitious, or Fraudulent Certification May Render the Maker Subject to Prosecution Under Section 1001, Title 18, United States Code.

B. The Proposer shall provide immediate written notice to the Contracting Officer if, at any time prior to contract award, the Proposer learns that its certification was erroneous when submitted or has become erroneous by reason of changed circumstances.

C. A certification that any of the items in paragraph (a) of this provision exists will not necessarily result in withholding of an award under this solicitation. However, the certification will be considered in connection with a determination of the Proposer's responsibility. Failure of the Proposer to furnish a certification or provide such additional information as requested by the Contracting Officer may render the Proposer non-responsive.

D. Nothing contained in the foregoing shall be construed to require establishment of a system of records in order to render, in good faith, the certification required by paragraph (a) of this provision. The knowledge and information of a Proposer is not required to exceed that which is normally possessed by a prudent person in the ordinary course of business dealings.

E. The certification in paragraph (a) of this provision is a material representation of fact upon which reliance was placed when making award. If it is later determined that the Proposer knowingly rendered an erroneous certification, in addition to other remedies available to the Government, the Contracting Officer may terminate the contract resulting from this solicitation for default.

AS THE PERSON AUTHORIZED TO SIGN THE STATEMENT, I CERTIFY THAT THIS FIRM COMPLIES FULLY WITH THE ABOVE REQUIREMENTS.

Signature

Printed Name Mary Adams

CITY OF OPA-LOCKA
RFQ NO. 23-TBA

DRUG-FREE WORKPLACE CERTIFICATION FORM

Whenever two (2) or more bids/proposals, which are equal with respect to price, quality, and service, are received by the CITY OF OPA-LOCKA for the procurement of commodities or contractual services, a bid/proposal received from a business that certifies that it has implemented a drug-free workplace program shall be given preference in the award process. In order to have a drug-free workplace program, a business shall:

1. Publish a statement notifying employees that the unlawful manufacture, distribution, dispensing, possession or use of controlled substances is prohibited in the workplace and specifying the actions that will be taken against employees for violations of such prohibition.

2. Inform employees about the dangers of drug abuse in the workplace, the business's policy of maintaining a drug-free workplace, any available drug counseling, rehabilitation, and employee assistance programs, and the penalties that may be imposed upon employees for drug abuse violations.

3. Give each employee engaged in providing the commodities or contractual services that are under bid a copy of the statement specified in number (1).

4. In the statement specified in number (1), notify the employees that as a condition for working on the commodities or contractual services that are under bid, the employee will abide by the terms of the statement and will notify the employer of any conviction on or plea of guilty or no contest to any violation of Chapter 893, Florida Statutes or of any controlled substance law of the United States or any singular state, for a violation occurring in the workplace no later than five (5) days after such conviction.

5. Impose a sanction on or require the satisfactory participation in a drug abuse assistance or rehabilitation program if such is available in the employee's community by any employee who is so convicted.

6. Make a good faith effort to continue to maintain a drug-free workplace through implementation of Section 287.087, Florida Statutes.

This Certification is submitted by Mary Adams (Name) the CEO/Owner (Title/Position) of The Employee Relations Group (Company)

who does hereby certify that said Company has implemented a drug-free workplace program, which meets the requirements of Section 287.087, Florida Statutes, which are identified in numbers (1) through (6) above.

11/5/2023
Date

Signature

E-VERIFY

Effective January 1, 2021, public and private employers, contractors and subcontractors will be required to register with, and use of the E-Verify system in order to verify the work authorization status of all newly hired employees. Vendor/Consultant/Contractor acknowledges and agrees to utilize the U.S. Department of Homeland Security's E-Verify System to verify the employment eligibility of:

a) All persons employed by Vendor/Consultant/Contractor to perform employment duties within Florida during the term of the contract; and

b) All persons (including sub-vendors/sub-consultants/sub-contractors) assigned by Vendor /Consultant/ Contractor to perform work pursuant to the contract with the Department. The Vendor /Consultant/ Contractor acknowledges and agrees that use of the U.S. Department of Homeland Security's E-Verify System during the term of the contract is a condition of the contract with the City; and

By entering into a Contract, the Contractor becomes obligated to comply with the provisions of Section 448.095, Fla. Stat., "Employment Eligibility," as amended from time to time. This includes but is not limited to utilization of the E-Verify System to verify the work authorization status of all newly hired employees, and requiring all subcontractors to provide an affidavit attesting that the subcontractor does not employ, contract with, or subcontract with, an unauthorized alien. The contractor shall maintain a copy of such affidavit for the duration of the contract. Failure to comply will lead to termination of this Contract, or if a subcontractor knowingly violates the statute, the subcontract must be terminated immediately. If t contract is terminated for a violation of the statute by the Contractor, the Contractor may not be awarded a public contract for a period of 1 year after the date of termination. The Contractor acknowledges it is liable to the City for any additional costs as a result of termination of the contract due to Contractor's failure to comply with the provisions herein.

E-VERIFY FORM

Definitions:

"Contractor" means a person or entity that has entered or is attempting to enter into a contract with a public employer to provide labor, supplies, or services to such employer in exchange for salary, wages, or other remuneration.

"Subcontractor" means a person or entity that provides labor, supplies, or services to or for a contractor or another subcontractor in exchange for salary, wages, or other remuneration.

Effective January 1, 2021, public and private employers, contractors and subcontractors will begin required registration with, and use of the E-Verify system in order to verify the work authorization status of all newly hired employees. Vendor/Consultant/Contractor acknowledges and agrees to utilize the U.S. Department of Homeland Security's E-Verify System to verify the employment eligibility of:

a) All persons employed by Vendor/Consultant/Contractor to perform employment duties within Florida during the term of the contract; and

b) All persons (including sub-vendors/subconsultants/subcontractors) assigned by Vendor/Consultant/Contractor to perform work pursuant to the contract with the Department. The Vendor/Consultant/Contractor acknowledges and agrees that use of the U.S. Department of Homeland Security's E-Verify System during the term of the contract isa condition of the contract with the City of Opa-locka; and

Should vendor become successful Contractor awarded for the above-named project, by entering into this Contract, the Contractor becomes obligated to comply with the provisions of Section 448.095, Fla. Stat., "Employment Eligibility," as amended from time to time. This includes but is not limited to utilization of the E-Verify System to verify the work authorization status of all newly hired employees, and requiring all subcontractors to provide an affidavit attesting that the subcontractor does not employ, contract with, or subcontract with, an unauthorized alien. The contractor shall maintain a copy of such affidavit for the duration of the contract. Failure to comply will lead to termination of this Contract, or if a subcontractor knowingly violates the statute, the subcontract must be terminated immediately. If this contract is terminated for a violation of the statute by the Contractor, the Contractor may not be awarded a public contract for a period of 1 year after the date of termination.

Company Name: The Employee Relations Group

Authorized Signature: 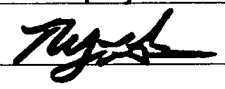

Print Name: Mary Adams

Title: CEO / Owner

Date: 11/5/2023

Contractor's Occupational License in the area of their fixed business location.

1. Legal Name and Address:

Name: The Employee Relations Group

Address: 401 E. Las Olas Blvd. Suite #130-162

City, State, Zip: Fort Lauderdale, FL 33301

Phone/Fax: (954) 980-7874 / Fax (954) 406-5498

2. Check One: Corporation (X) Partnership ( ) Individual ( )

3. If Corporation, indicate:
Date of Incorporation: 01/01/2012 State in which Incorporated: Florida

4. If an out-of-state Corporation, currently authorized to do business in Florida, give date of such authorization: Not applicable.

5. Name and Title of Principal Officers Date Elected:
3.2.11

Mary Adams CEO	2012
Klaus Roithner	2012

6. The length of time in business: 11 (eleven) years

7. The length of time (continuous) in business as a service organization in Florida:
11 (eleven) Years. Provide corporate forms from the Florida Division of Corporations of a similar state entity.

8. A list of at least three commercial, corporate, or government references that the bidder has supplied service/commodes meeting the requirements of the City of Opa-Loka RFQ during the last twenty-four months:

a. Company Name: Blue Trading US
b. Company Name: The Pride Center At Equity Park
c. Company Name: MH3 Management LLC
d. Company Name: SW Corp
e. Company Name The Mosaic Group

9.

10. A copy of County and/or Municipal Occupational License(s)

CITY OF FORT LAUDERDALE

BUSINESS TAX YEAR 2023-24

Business Tax Division
700 NW 19TH AVE. | FORT LAUDERDALE, FL 33311 | (954) 828 - 5195

Business ID: BL-1600754 **Business Name:** THE EMPLOYEE RELATIONS GROUP LLC

Business Address: 401 E LAS OLAS BLVD # 130-162

KLAUS ROITHNER
THE EMPLOYEE RELATIONS GROUP LLC
401 E LAS OLAS BLVD # 130-162
FORT LAUDERDALE FL 33301

TAX CATEGORIES

406210 CONSULTANT (UNCLASSIFIED)

Contact: KLAUS ROITHNER
Business Email: Klaus@Terg.Com

- This Receipt is issued for the period commencing October 1st and ending September 30th of the years shown above.
- If you have closed or moved out of the city, please email businesstax@fortlauderdale.gov and include the Business ID #.
- A transfer of business location within city limits is subject to zoning approval. Complete a Business Tax Transfer Application online to obtain the necessary approval. A transfer fee of 10% of the Business Tax fee applies, not less than $3.00, no more than $25.00.
- If you have sold your business, please email a copy of the Bill of Sale to businesstax@fortlauderdale.gov and include the Business ID #. A transfer of ownership will incur a transfer fee of 10% of the Business Tax fee, not less than $3.00, no more than $25.00.

Please be advised that this issuance of a Business Tax Receipt establishes that the business you intend to conduct is a use permitted by the City Zoning Code for the location at which you intend to operate. The issuance of a Business Tax Receipt in no way certifies that the property located at this address is in compliance with other provisions of the City Code of Ordinances.

700 NW 19TH AVE.
Fort Lauderdale, FL 33311
TEL 954 828 5195
WWW.FORTLAUDERDALE.GOV

See attached document for Exhibit "B"

(CITY'S to Request for Qualifications)

RFQ NO: 23-1107100

REQUEST FOR QUALIFICATIONS (RFQ)

OUTSIDE ENTITY HUMAN RESOURCES DIRECTOR

CITY OF OPA-LOCKA
RFQ NO. 23-TBA
OUTSIDE ENTITY HUMAN RESOURCES DIRECTOR

TABLE OF CONTENTS

Subject	Page Number
Cover	1
Table of Contents	2
Advertisement	3
Part I - Proposal Guidelines	4
Part II - Nature of Services Required	9
Part III - Proposal Requirements	12
Part IV - Evaluation of Proposals	15
Proposer Qualifications	17
Debarment, Suspension Certification	18
Drug-Free Certification	20
Non-Collusion Affidavit	21
Non-Discrimination Affidavit	22
E-Verify Form	23

CITY OF OPA-LOCKA
REQUEST FOR QUALIFICATIONS
RFQ NO: 23-1107100
OUTSIDE ENTITY HUMAN RESOURCES DIRECTOR

Sealed proposal for RFQ No. 23-1107100 for OUTSIDE ENTITY HUMAN RESOURCES DIRECTOR for the City of Opa-locka will be received at the Office of the City Clerk, 780 Fisherman St, 4th Floor, Opa-locka, Florida 33054, by 1:00 p.m. on Tuesday, November 7, 2023. Any RFQ Package received after the designated closing time will be returned unopened. The City will accept proposals by mail; however, the contractor must submit the proposal by the due date. In addition, the proposal may be submitted via www.demandstar.com (e-bid) by 1:00 pm.

The address to submit sealed proposal is listed below:

CITY OF OPA-LOCKA
Office of the City Clerk
780 Fisherman Street, 4th Floor
Opa-locka, Florida 33054

An original and six (6) copies for a total of seven (7) plus 1 copy of the Proposal package on USB Flash Drive in PDF format shall be submitted in sealed envelopes/packages addressed to the City Clerk, City of Opa-locka, Florida, and marked RFQ No. 23-1107100 for OUTSIDE ENTITY HUMAN RESOURCES DIRECTOR.

Proposers desiring information for use in preparing proposals may obtain a set of such documents by visiting the City's website at www.opalockafl.gov or www.demandstar.com.

The City reserves the right to accept or reject any and all proposals and to waive any technicalities or irregularities therein. The City further reserves the right to award the contract to that proposer whose proposal best complies with the RFQ NO: 23-1107100 requirements. Proposers may not withdraw their proposal for a period of ninety (90) days from the date set for the opening thereof.

Joanna Flores, CMC
City clerk

CITY OF OPA-LOCKA

REQUEST FOR QUALIFICATIONS
RFQ NO: 23-1107100
OUTSIDE ENTITY HUMAN RESOURCES DIRECTOR

PART I

PROPOSAL GUIDELINES

1-1. Introduction: The City of Opa-locka seeks proposals for an OUTSIDE ENTITY HUMAN RESOURCES DIRECTOR. The City is soliciting bids on behalf of the City Manager's Office for Outside Entity Human Resources Director under the laws of the State of Florida. These services must be efficient and economical, adhere to industry standards and best practices, and utilize the latest nonproprietary technology. The Contract will be awarded to the most qualified Proposer, as described in the Evaluation Procedures Section below.

1-2. Proposal Submission and Withdrawal: The City of Opa-locka will be accepting proposals by mail, however it is Proposer's responsibility to submit Proposer's proposal by the due date. In addition, proposals may be submitted via www.demandstar.com (e-bid). The city must receive all proposals by 1:00 p.m. on November 7, 2023. The address to submit sealed proposals is listed below:

CITY OF OPA-LOCKA
Office of the City Clerk
780 Fisherman Street, 4th Floor
Opa-locka, Florida 33054

To facilitate processing, please clearly mark the outside of the proposal package as follows: RFQ NO. 23-1107100 – OUTSIDE ENTITY HUMAN RESOURCES DIRECTOR.

This package shall also include the Proposer's return address. Proposers may withdraw their proposals by notifying the City in writing at any time prior to the deadline for proposal submittal. After the deadline, the proposal will constitute an irrevocable offer, for a period of 90 days. Once opened, proposals become a record of the City and will not be returned to the Proposer.

The City cautions Proposers to assure actual delivery of mailed or hand-delivered proposals directly to the City Clerk's Office at 780 Fisherman Street, 4th Floor, Opa-locka, Florida 33054 prior to the deadline set for receiving proposals. Telephone confirmation of timely receipt of the proposal may be made by calling (305) 688-4611 before proposal closing time. Any proposal received after the established deadline will not be considered and will be returned unopened to the Proposer(s).

1-3. Number of Copies: Proposers shall submit an original and six (6) copies (a total of 7) plus one copy on USB flash drive in PDF format of the proposal in a sealed, opaque package marked as noted above. The Proposer will be responsible for timely delivery, whether by personal delivery, US Mail or any other delivery medium.

1-4. Development Costs: Neither the City nor its representatives shall be liable for any expenses incurred in connection with the preparation of a response to this Request for Proposal. Proposers should prepare their proposals simply and economically, providing a straightforward and concise description of the Proposer's ability to meet the requirements of the RFQ.

1-5. Inquiries: The City Clerk will receive written requests for clarification concerning the meaning or interpretations of the RFQ, up until eleven (11) days prior to the submittal date. City personnel are authorized only to direct the attention of prospective Proposers to various portions of the RFQ so that they may read and interpret such for themselves. No employee of the City is authorized to interpret any portion of this RFQ or give information as to the requirements of the RFQ in addition to what is contained in the written RFQ document or Resolution 23-150 authorizing the RFQ.

1-6. Addendum: The City may record its response to inquiries and any supplemental instructions in the form of written addenda. The City may email or post written addenda up to two (2) calendar days before the date fixed for receiving the proposals. Proposers shall contact the City to ascertain whether any addenda have been issued. Failure to do so could result in an unresponsive proposal. Any oral explanation given before the RFQ opening will not be binding.

All Proposers are expected to carefully examine the proposal documents. Any ambiguities or inconsistencies should be brought to the attention of the City Clerk through written communication prior to the opening of the proposals, which should be forwarded by the City Clerk to the City Attorney.

1-7. Contract Awards: The City anticipates entering into an Agreement with the Proposer who submits the proposal judged by the City to be most advantageous.

The Proposer understands that this RFQ does not constitute an offer or an Agreement with the Proposer. An offer or Agreement shall not be deemed to exist and is not binding until proposals are reviewed and accepted for final approval of a contract form.

The City reserves the right to reject all proposals, to abandon the project and/or to solicit and re-advertise for other proposals.

1-8. Contractual Agreement: This RFQ and Consultant/Contractor proposal shall be included and incorporated in the final award. The successful proposer and the City will then enter into an Agreement in a form acceptable to the City Attorney. The order of contractual precedence will be the Contract or Agreement document, original Terms and Conditions, and Proposer response. Any and all legal action necessary to enforce the award will be held in Miami-Dade County and the contractual obligations will be interpreted according to the laws of Florida. Any additional language for consideration by the Proposer must be attached and enclosed as part of the proposal.

1-9. Selection Process: The proposals will be evaluated by the City Commission and shortlisted consistent with qualifications deemed responsive.

The City reserves the right to negotiate price.

1-10. Public Records: Upon award recommendation or ten (10) days after opening, whichever occurs first, proposals become "public records" and shall be subject to public disclosure consistent with Chapter 119 Florida Statutes. Proposers must invoke the exemptions to disclosure provided by law in the response to the RFQ and must identify the data or other materials to be protected and must state the reasons why such exclusion from public disclosure is necessary. Document files may be examined during normal working hours.

1-11. News Releases: The Proposer shall obtain the prior approval of the City Manager's Office for all news releases or other publicity pertaining to this RFQ or the service, study or project to which it relates.

1-12. Insurance: The awarded Proposer(s) shall maintain insurance coverage reflecting at least the minimum amounts and conditions specified herein. In the event the Proposer is a governmental entity or a self-insured organization, different insurance requirements may apply. Misrepresentation of any material fact, whether intentional or not, regarding the Proposers' insurance coverage, policies or capabilities may be grounds for rejection of the proposal and rescission of any ensuing Agreement.

1. Evidence of General Liability coverage with limits not less than $1,000,000 per Occurrence (Including Policy Number and Policy Period);

2. Evidence of Auto Liability coverage with limits not less than $300,000 per Occurrence (Including Policy Number and Policy Period);

3. Evidence of Workers' Compensation coverage with statutory limits and Employer's Liability coverage with limits not less than $100,000 (Including Policy Number and Policy Period), if applicable;

4. The City listed as an additional insured (this may be specifically limited to the specific job(s) the contractor will be performing);

5. Minimum 30-day written notice of cancellation.

1-13. Licenses: Proposers, both corporate and individual, must be fully licensed and certified in the State of Florida at the time of RFQ submittal to the extent applicable.

1-14. Public Entity Crimes: Award will not be made to any person or affiliate identified on the Department of Management Services' "Convicted Vendor List". This list is defined as consisting of persons and affiliates who are disqualified from public contracting and purchasing processes because they have been found guilty of a public entity crime. No public entity shall award any contract to, or transact any business in excess of the threshold amount provided in Section 287.17 Florida Statutes for Category Two (currently $25,000) with any person or affiliated on the "Convicted Vendor List" for a period of thirty-six (36) months from the date that person or affiliate was placed on the "Convicted Vendor List" unless that person or affiliate has been removed from the list. By signing and submitting the RFQ proposal forms, Proposer attests that they have not been placed on the "Convicted Vendor List".

1-15. Code Of Ethics: If any Proposer violates or is a party to a violation of the code of ethics of the City of Opa-locka, Miami-Dade County or the State of Florida with respect to this proposal, such Proposer may be disqualified from performing the work described in this proposal or from furnishing the goods or services for which the proposal is submitted and shall be further disqualified from submitting any future proposals for work, goods or services for the City of Opa-locka. Further, the proposer shall not have any prior personal or business relationship with the City's Interim City Manager or City Manager and shall not have previously provided services or advice to the City of Opa-Locka at any time in the past ten (10) years. Rather, the proposer shall be an independent individual or firm free from influence through its officers and employees.

1-16. Drug-Free Workplace: Preference shall be given to businesses with Drug-Free Workplace (DFW) programs. Whenever two or more proposals which are equal with respect to price, quality, and service are received by the City for the procurement of commodities or contractual services, a proposal received from a business that completes the attached DFW form certifying that it is a DFW shall be given preference in the award process.

1-17. Permits and Taxes: The Proposer shall procure all permits, pay all charges, fees, and taxes, and give all notices necessary and incidental to the due and lawful execution of the work where applicable.

1-18. Protests: Protests of the plans, specifications, and other requirements of the request for proposal and bids must be received in writing by the City Clerk's Office prior to the scheduled bid opening.

1-19. Termination for Convenience: A contract may be terminated in whole or in part by the City at any time and for any reason in accordance with this clause whenever the City Commission shall determine that such termination is in the best interest of the City.

CALENDAR EVENTS

EVENT	DATE/LOCATION	
Release Date	October 20, 2023	
Pre-Bid Meeting	N/A	
Written Questions Due	October 27, 2023 @ 10:00 AM Email questions to the City Clerk: jflores@opalockafl.gov With Subject line "RFQ No: 23-1107100 Bid Questions"	
Response to Questions	October 31, 2023	
Due Date/Bid Opening	November 7, 2023 @ 1:00 pm	at: City of Opa-locka Clerk Office 780 Fisherman Street, 4th Floor Opa-locka, Florida 33054 OR Electronic Bid on www.Demandstar.com
EVALUATION: Evaluation Committee Meeting (Open to the Public).	November 8, 2023 @ 6 PM	
Award	November 8, 2023 @ 7PM Regular Meeting	

PART II

NATURE OF SERVICES REQUIRED

2-1 PURPOSE AND SCOPE OF WORK

Purpose

The City of Opa-locka is seeking the professional services of a firm knowledgeable in Human Resources (HR) practices to serve and the City's Human Resources Director and specifically serve in the role of the City's Human Resources Department consistent with the City's Ordinances. The scope of work may include, but is not limited to recruitment, hiring practices, working along with the City Manager, City Attorney and city staff to ensure legal compliance, creation or revisions of policies and procedures necessary for a functioning Human Resources Department. The Human Resources Director shall report to the City Manager as a best practice for this function. The City is not responsible for any costs incurred by the respondent in proposal preparation, presentations, site visits, or benchmarks performed.

Scope of Work

The selected individual or firm shall be expected to perform the services required under this Request for Qualifications in the most expeditious manner possible. The scope should include the following, but is not limited to:

1. Conducting and overseeing a City Manager Search consistent with the City's Code of Ordinances and existing procedures for the selection of a City Manager. With respect to the search of the City Manager, the Human Resources Director shall not communicate with the Interim City Manager or share any information that is not shared with any other candidate seeking the position of the permanent City Manager. Further, the Human Resources Director shall not share information or operate in any way that would serve to give the Interim City Manager an advantage or control of the City Manager selection process. To the extent that the Human Resources Director feels compromised in any way by the Interim City Manager, this information shall be immediately reported, by email, to the City Commission with a copy of the email provided to the City Clerk and the City Attorney.

2. Professional Human Resources Duties: The firm would serve as the Human Resources Director and perform all professional human resources duties as required by City Ordinances. The firm would advise and report to management on HR best practices and compliance with employment laws and policy. The firm would also be available to assist with employee relations and disputes.

    - The firm will meet with key representatives (City Manager, Assistant City Managers, and Directors as needed) to discuss the needs of the City. The firm will also meet with the City Attorney when necessary to secure information needed for the City Attorney's work.

3. Creating, Updating, and Implementing HR/Employment Policies: The firm would work with management on creating, updating, and implementing HR/Employment policies and procedures. The firm would assist the city with updating the employee manual on an as-needed basis.

4. Job Descriptions: The firm would work with management to revise and create new job descriptions

when necessary.

5. Recruitment: Recruitment services for various positions to be filled as needed. The HR professional or firm would work with the City during relevant recruitment periods.

    - Meet with key decision makers to develop ideal candidate profiles.
    - Write or adapt job description and determine or confirm salary range for management review and board approval, if appropriate.
    - Develop and implement recruitment and advertising strategy.
    - Develop (or modify existing) job flyer.
    - Assist with advertisement in appropriate locations, including social media and specialized job boards.
    - Review application packets and assess candidates with management.
    - Manage the interview process, including developing questions and scoring mechanisms.
    - Where necessary, conduct skills testing.
    - Work with law enforcement to obtain any necessary credentials needed for background checks where appropriate.
    - Check references and conduct background checks.
    - Other recruitment tasks as necessary.
    - Other relevant tasks as required for the smooth operation of the Human Resources Department.

6. Agreement with City: It is the intent of this solicitation that the HR Director work with and report to the City Manager on all issues unrelated to the permanent City Manager selection process. The City Manager will make the final decision on the hiring of the HR position, following a shortlisting of no less than two (2) candidates by the City Commission. The successful HR Director candidate will be required to enter into an agreement with the City that may be terminated by the City Manager if there is a breach of the Agreement terms.

7. Other HR Functions and Support As Needed: Other HR functions and support that are needed include, but not limited to, Compensation Study and Assistance with Benchmark Classifications, investigations of complaints by employees, reviewing of counseling or other disciplinary actions, memos, etc., training or coaching of staff in HR areas as needed, policy or procedure writing, update and/or review, and special projects.

8. Legal Compliance: Ensure compliance with federal, state, and local laws and regulations related to employment and internal policies and procedures. Be knowledgeable about HR laws and regulations pertinent to public agencies under the general law. Provide suggestions and recommendations regarding areas that need to be addressed for legal compliance.

9. Deliverables: The City expects the consultant to be onsite at least one (1) day per week for no less than six (6) hours day and be available through telephone, remote video conference, or email as needed throughout the week. Note: The City prefers having set hours of availability for at least two days a week and expects the consultant to respond to email within a 24 hour period.

2-2 PROPOSER QUALIFICATIONS

Adequate information and documentation must be provided in the Proposal to support or confirm satisfaction of the required qualifications below:

- The Proposer shall have extensive experience, expertise, and reliability as a Human Resources Professional with an established good reputation, particularly with governmental clients or large corporate entities. Proposer must have a minimum of five (5) years of consecutive and successful experience in the aforementioned areas.
- Proposer's track record in providing services to governmental agencies or large corporate entities. Please provide a list of current and relevant projects, including client names, titles, telephone numbers and email address. Please ensure that contact information is current.
- Demonstrate an overall combination of skills, prior work experience, business reputation, and commitment to diversity.

2-3 TERM OF CONTRACT

The contract period for the winning bidder of this RFQ is anticipated to be one (1) fiscal year with two one (1) year option for renewal.

An Agreement may be for a lesser period of time.

PART III

PROPOSAL REQUIREMENTS

3-1 RULES FOR PROPOSALS

In order to maintain comparability and enhance the review process, proposals shall be organized in the manner specified below and include all information required herein. The proposal must name all persons or entities interested in the proposal as principals and the persons likely to perform work not in conflict with provisions of this RFQ. The proposal must declare that it is made without collusion with any other person or entity submitting a proposal pursuant to this RFQ. The proposal must be independent and not have had any contact with any City Staff members of the City regarding this proposal, unless specifically authorized herein.

3-2 SUBMISSION OF PROPOSALS

The proposal shall be submitted on 8 ½ "x 11" paper, portrait orientation, with headings and sections numbered appropriately. Ensure that all information is written legibly or typed. The following should be submitted for a proposing firm to be considered:

3.2.1 Cover Page - Show the name of Proposer's agency/firm, address, telephone number, name of contact person, date, and the proposal number and description.

3.2.2 Tab 1 - Table of Contents
Include a clear identification of the material by section and by page number.

3.2.3 Tab 2 - Letter of Transmittal

- 3.2.3.1 Limit to one or two pages.
- 3.2.3.2 Briefly state the Proposer's understanding of the work to be done and make a positive commitment to perform the work.
- 3.2.3.3 Give the names of the persons who will be authorized to make representations for the Proposer during the Agreement as the City contact, their titles, addresses and telephone numbers.
- 3.2.3.4 Provide an official signature of a Corporate Officer certifying the contents of the Proposer's responses to the City's Request for Proposal.

3.2.4 Tab 3 - General Information

- 3.2.4.1 Name of Business.
- 3.2.4.2 Mailing Address and Telephone Number.
- 3.2.4.3 Names and contact information of persons to be contacted for information or services if different from name of person in charge.
- 3.2.4.4 Normal business hours.
- 3.2.4.5 State if business is local, national, or international and indicate the business legal status (corporation, partnership, etc.).
- 3.2.4.6 Give the date business was organized and/or incorporated, and where.
- 3.2.4.7 Give the location of the office from which the work is to be done and the number of professional staff employees at that office.
- 3.2.4.8 Indicate whether the business is a parent or subsidiary in a group of firms/agencies.

If it is, please state the name of the parent company.

3.2.4.9 State if the business is licensed, permitted and/or certified to do business in the State of Florida and attach copies of all such licenses issued to the business entity.

3.2.5 Tab 4 – Project Approach

Describe in detail the proposal to fulfill the requirements of the scope of services listed in section 2.2 of this RFQ.

3.2.6 Tab 5 – Experience and Qualifications

3.2.6.1 Specify the number of years the Proposer has been in business.

3.2.6.2 Identify the Proposer's qualifications to perform the services identified in this RFQ as listed in section 2-2 of the Scope of Services.

Include resumes, not exceeding one page each, of all key personnel who will be assigned to the City for this project.

3.2.7 Tab 6 – Schedule

3.2.7.1 Include a timetable that identifies the amount of time required to complete each component of the Program listed in this RFQ to the best of knowledge and understanding.

3.2.7.2 Indicate the earliest available start date for Proposer's project team.

3.2.7.3 Indicate the project completion date based on the date provided in 3.2.7.1.

3.2.8 Tab 7 – Pricing of Services

3.2.8.1 Projected Fee basis should be an all-inclusive, base fee.

3.2.9 Tab 8 – References

3.2.9.1 List a minimum of three (3) references in Florida for which the Proposer has provided services detailed on the solicitation. Include the name of the organization, brief description of the project, name of contact person telephone number and email address.

3.2.10 Tab 9 – Additional Forms

Proposers must complete and submit as part of its Proposal all of the following forms and/or documents.

- Proposer Qualifications
- Certification regarding debarment and suspension
- Drug Free workplace certification
- E-Verification

FAILURE TO SUBMIT ALL OF THE ABOVE REQUIRED DOCUMENTATION MAY DISQUALIFY PROPOSER.

PART IV
EVALUATION OF PROPOSALS

4-1 SELECTION COMMITTEE

A Selection Committee, consisting of the City Commission, will convene to shortlist no less than two candidates with the Interim City Manager or City Manager making the final decision. The Selection Committee shall also be known as the Shortlisting Committee. The Selection Committee will consider, and shortlist based on qualifications. The Proposer shall satisfy and explicitly respond to all the requirements of the RFQ, including qualifications and a detailed explanation of how the services shall be performed.

Each proposal will be reviewed to determine if the Proposal is responsive to the submission requirements outlined in the Solicitation. A responsive Proposal is one which follows the requirements of this Solicitation that includes all documents submitted in the format outlined in this Solicitation, is of timely submission, and has the appropriate signatures as required on each document. Failure to comply with these requirements may result in the Proposal being deemed non-responsive. The Contract (s) will be awarded to the most responsive and responsible Proposer whose Proposal best serves the interest of the City.

4-2 EVALUATION CRITERIA

The Committee may choose to invite any and/or or all firms to make presentations and be interviewed by the Committee as part of the evaluation process for this Solicitation. The Committee's decision will be communicated to all Proposers.

4-3 ORAL PRESENTATIONS

Proposers may be required to make individual presentations to the City Selection Committee to clarify their proposals. However, the City Commission has the right to accept and shortlist the best proposal as submitted, without discussion or negotiation.

If the City Commission determines that such presentations are needed, a time and place will be scheduled for oral presentations. Candidates should be available for presentations at the City Commission meeting or workshop where the proposals will be reviewed and shortlisted. Each Proposer shall be prepared to discuss and substantiate any of the areas of the proposal submitted, and its qualifications to perform the specified services. During the oral presentations, the Proposers should relate their discussion to the evaluation criteria, which will include (but not be limited to) their approach to the project. The proposed Project Manager must be in attendance.

The Evaluation Criteria may be changed for the oral presentation evaluation phase. References and site visits (if completed) shall be included in the final evaluation criteria, along with other criteria and weights as determined by the Selection Committee shortlisting. Finalists will be informed as to the revised criteria, if any, prior to their oral presentation.

Additionally, prior to award of an Agreement pursuant to this RFQ, the City may require Proposers to submit such additional information bearing upon the Proposer's ability to perform the services in the Agreement as the City deems appropriate.

4-4 FINAL SELECTION

The Interim City Manager or City Manager of Opa-locka Commission will select the firm that meets the best interests of the City following shortlisting. The City shall be the sole judge of its own best interests, the proposals, and the resulting negotiated Agreement. The City's decisions will be final. Following the selection of firm, the expectation is that an Agreement will be executed between both parties. The City Manager will recommend award to the responsible Proposer whose Proposal is determined to provide overall best value to the City, considering the evaluation factors in this RFQ following shortlisting.

4-5 AWARD AND CONTRACT EXECUTION

After review by the Selection Committee of the proposals and oral presentations a recommendation the City Commission will shortlist no less than two (2) firms for selection by the Interim City Manager or City Manager. Upon selection, contract negotiations will be initiated with the successful firm through the City Attorney's Office. Upon successful contract negotiations with the prevailing firm, the remaining firms will be notified that the process has been completed and that they were not selected.

RFQ NO. 23-TBA
OUTSIDE ENTITY HUMAN RESOURCES DIRECTOR

The Proposer, as a result of this proposal, should hold a County and/or Municipal Contractor's Occupational License in the area of their fixed business location. Complete and submit with the proposal the following information:

1. Legal Name and Address:

   Name: _____

   Address: _____

   City, State, Zip:_____Phone/Fax: _____

2. Check One: Corporation ( ) Partnership ( ) Individual ( )

3. If Corporation, indicate:
   Date of Incorporation:_____State in which Incorporated: _____

4. If an out-of-state Corporation, currently authorized to do business in Florida, give date of such authorization:_____

5. Name and Title of Principal Officers Date Elected:

_____	_____
_____	_____
_____	_____
_____	_____

6. The length of time in business:_____years

7. The length of time (continuous) in business as a service organization in Florida:
   _____Years. Provide corporate forms from the Florida Division of Corporations of similar state entity.

8. Provide a list of at least three commercial, corporate or government references that the bidder has supplied service/commodities meeting the requirements of the City of Opa-locka RFQ during the last twenty-four months.

9.

10. A copy of County and/or Municipal Occupational License(s)

Note: *Information requested herein and submitted by the Proposers will be analyzed by the City of Opa-locka and will be a factor considered in awarding any resulting contract. The purpose is to ensure that the Contractors, in the sole opinion of the City of Opa-locka, can sufficiently and efficiently perform all the required services in a timely and satisfactory manner as will be required by the subject contract. If there are any terms and/or conditions that are in conflict, the most stringent requirement shall apply.*

CITY OF OPA-LOCKA

CERTIFICATION REGARDING DEBARMENT, SUSPENSION
PROPOSED DEBARMENT AND OTHER MATTERS OF
RESPONSIBILITY

1. The Proposer certifies, to the best of its knowledge and belief, that the Proposer and/or any of its Principals:

A. Are not presently debarred, suspended, proposed for debarment, or declared ineligible for the award of contracts by any Federal agency.

B. Have not, within a three-year period preceding this offer, been convicted of or had a civil judgment rendered against them for: commission of fraud or a criminal offense in connection with obtaining, attempting to obtain, or performing a public (Federal, state, or local) contract or subcontract; violation of Federal or state antitrust statutes relating to the submission of offers; or commission of embezzlement, theft, forgery, bribery, falsification or destruction of records, making false statements, tax evasion, or receiving stolen property; and

C. Are not presently indicted for, or otherwise criminally or civilly charged by a governmental entity with, commission of any of the offenses enumerated in paragraph 1-B of this provision.

2. The Proposer has not, within the three-year period preceding this offer, had one or more contracts terminated for default by any City, State or Federal agency.

A. "Principals," for the purposes of this certification, means officers; directors; owners; partners; and persons having primary management or supervisory responsibilities within a business entity (e.g., general manager; plant manager; head of a subsidiary, division, or business segment, and similar positions). This Certification Concerns a Matter Within the Jurisdiction of an Agency of the United States and the Making of a False, Fictitious, or Fraudulent Certification May Render the Maker Subject to Prosecution Under Section 1001, Title 18, United States Code.

B. The Proposer shall provide immediate written notice to the Contracting Officer if, at any time prior to contract award, the Proposer learns that its certification was erroneous when submitted or has become erroneous by reason of changed circumstances.

C. A certification that any of the items in paragraph (a) of this provision exists will not necessarily result in withholding of an award under this solicitation. However, the certification will be considered in connection with a determination of the Proposer's responsibility. Failure of the Proposer to furnish a certification or provide such additional information as requested by the Contracting Officer may. render the Proposer non-responsive.

D. Nothing contained in the foregoing shall be construed to require establishment of a system of records in order to render, in good faith, the certification required by paragraph (a) of this provision. The knowledge and information of a Proposer is not required to exceed that which is normally possessed by a prudent person in the ordinary course of business dealings.

E. The certification in paragraph (a) of this provision is a material representation of fact upon which reliance was placed when making award. If it is later determined that the Proposer knowingly rendered an erroneous certification, in addition to other remedies available to the Government, the Contracting Officer may terminate the contract resulting from this solicitation for default.

AS THE PERSON AUTHORIZED TO SIGN THE STATEMENT, I CERTIFY THAT THIS FIRM COMPLIES FULLY WITH THE ABOVE REQUIREMENTS.

Signature_____

Printed Name _____

CITY OF OPA-LOCKA
RFQ NO. 23-TBA

DRUG-FREE WORKPLACE CERTIFICATION FORM

Whenever two (2) or more bids/proposals, which are equal with respect to price, quality, and service, are received by the CITY OF OPA-LOCKA for the procurement of commodities or contractual services, a bid/proposal received from a business that certifies that it has implemented a drug-free workplace program shall be given preference in the award process. In order to have a drug-free workplace program, a business shall:

1. Publish a statement notifying employees that the unlawful manufacture, distribution, dispensing, possession or use of controlled substances is prohibited in the workplace and specifying the actions that will be taken against employees for violations of such prohibition.

2. Inform employees about the dangers of drug abuse in the workplace, the business's policy of maintaining a drug-free workplace, any available drug counseling, rehabilitation, and employee assistance programs, and the penalties that may be imposed upon employees for drug abuse violations.

3. Give each employee engaged in providing the commodities or contractual services that are under bid a copy of the statement specified in number (1).

4. In the statement specified in number (1), notify the employees that as a condition for working on the commodities or contractual services that are under bid, the employee will abide by the terms of the statement and will notify the employer of any conviction on or plea of guilty or no contest to any violation of Chapter 893, Florida Statutes or of any controlled substance law of the United States or any singular state, for a violation occurring in the workplace no later than five (5) days after such conviction.

5. Impose a sanction on or require the satisfactory participation in a drug abuse assistance or rehabilitation program if such is available in the employee's community by any employee who is so convicted.

6. Make a good faith effort to continue to maintain a drug-free workplace through implementation of Section 287.087, Florida Statutes.

This Certification is submitted by_____the
(Name)
_____of_____
(Title/Position) (Company)

who does hereby certify that said Company has implemented a drug-free workplace program, which meets the requirements of Section 287.087, Florida Statutes, which are identified in numbers (1) through (6) above.

_____ _____
Date Signature

CITY OF OPA-LOCKA NON-COLLUSION AFFIDAVIT

STATE OF FLORIDA - COUNTY OF MIAMI DADE

_____ being first duly sworn, deposes and says that:

(1) He/She/They is/are the _____ (Owner, Partner, Officer, Representative or Agent) of _____ the PROPOSER that has submitted the attached proposal;

(2) He/She/They is/are fully informed respecting the preparation and contents of the attached Proposal and of all pertinent circumstances respecting such Proposal;

(3) Such Proposal is genuine and is not a collusive or sham Proposal;

(4) Neither the said PROPOSER nor any of its officers, partners, owners, agents, representatives, employees or parties in interest, including this affiant, have in any way colluded, conspired, connived or agreed, directly or indirectly, with any other PROPOSER, firm, or person to submit a collusive or sham Proposal in connection with the Work for which the attached Proposal has been submitted; or to refrain from Proposing in connection with such Work; or have in any manner, directly or indirectly, sought by agreement or collusion, or communication, or conference with any PROPOSER, firm, or person to fix any overhead, profit, or cost elements of the Proposal or of any other PROPOSER, or to fix any overhead, profit, or cost elements of the Proposed Price or the Proposed Price of any other PROPOSER, or to secure through any collusion, conspiracy, connivance, or unlawful agreement any advantage against (Recipient), or any person interested in the proposed Work;

(5) The price or prices quoted in the attached Proposal are fair and proper and are not tainted by any collusion, conspiracy, connivance, or unlawful agreement on the part of the PROPOSER or any other of its agents, representatives, owners, employees or parties of interest, including this affiant.

Signed, sealed and delivered in the presence of:

_____ By: _____
Witness Signature

_____ _____
Witness Print Name and Title

NON-DISCRIMINATION AFFIDAVIT

I, the undersigned, hereby duly sworn, depose and say that the organization, business or entity represented herein shall not discriminate against any person in its operations, activities or delivery of services under any agreement it enters into with the City of Opa-locka. The same shall affirmatively comply with all applicable provisions of federal, state and local equal employment laws and shall not engage in or commit any discriminatory practice against any person based on race, age, religion, color, gender, sexual orientation, national origin, marital status, physical or mental disability, political affiliation or any other factor which cannot be lawfully used as a basis for service delivery.

By:_____

Title:_____

Sworn and subscribed before this

____day of_____, 20____

_____
Notary Public, State of Florida

_____
(Printed Name)

My commission expires:_____

E-VERIFY

Effective January 1, 2021, public and private employers, contractors and subcontractors will be required to register with, and use of the E-Verify system in order to verify the work authorization status of all newly hired employees. Vendor/Consultant/Contractor acknowledges and agrees to utilize the U.S. Department of Homeland Security's E-Verify System to verify the employment eligibility of:

a) All persons employed by Vendor/Consultant/Contractor to perform employment duties within Florida during the term of the contract; and

b) All persons (including sub-vendors/sub-consultants/sub-contractors) assigned by Vendor /Consultant/ Contractor to perform work pursuant to the contract with the Department. The Vendor /Consultant/ Contractor acknowledges and agrees that use of the U.S. Department of Homeland Security's E-Verify System during the term of the contract is a condition of the contract with the City; and

By entering into a Contract, the Contractor becomes obligated to comply with the provisions of Section 448.095, Fla. Stat., "Employment Eligibility," as amended from time to time. This includes but is not limited to utilization of the E-Verify System to verify the work authorization status of all newly hired employees, and requiring all subcontractors to provide an affidavit attesting that the subcontractor does not employ, contract with, or subcontract with, an unauthorized alien. The contractor shall maintain a copy of such affidavit for the duration of the contract. Failure to comply will lead to termination of this Contract, or if a subcontractor knowingly violates the statute, the subcontract must be terminated immediately. If t contract is terminated for a violation of the statute by the Contractor, the Contractor may not be awarded a public contract for a period of 1 year after the date of termination. The Contractor acknowledges it is liable to the City for any additional costs as a result of termination of the contract due to Contractor's failure to comply with the provisions herein.

E-VERIFY FORM

Definitions:

"Contractor" means a person or entity that has entered or is attempting to enter into a contract with a public employer to provide labor, supplies, or services to such employer in exchange for salary, wages, or other remuneration.

"Subcontractor" means a person or entity that provides labor, supplies, or services to or for a contractor or another subcontractor in exchange for salary, wages, or other remuneration.

Effective January 1, 2021, public and private employers, contractors and subcontractors will begin required registration with, and use of the E-Verify system in order to verify the work authorization status of all newly hired employees. Vendor/Consultant/Contractor acknowledges and agrees to utilize the U.S. Department of Homeland Security's E-Verify System to verify the employment eligibility of:

a) All persons employed by Vendor/Consultant/Contractor to perform employment duties within Florida during the term of the contract; and

b) All persons (including sub-vendors/subconsultants/subcontractors) assigned by Vendor/Consultant/Contractor to perform work pursuant to the contract with the Department. The Vendor/Consultant/Contractor acknowledges and agrees that use of the U.S. Department of Homeland Security's E-Verify System during the term of the contract isa condition of the contract with the City of Opa-locka; and

Should vendor become successful Contractor awarded for the above-named project, by entering into this Contract, the Contractor becomes obligated to comply with the provisions of Section 448.095, Fla. Stat., "Employment Eligibility," as amended from time to time. This includes but is not limited to utilization of the E-Verify System to verify the work authorization status of all newly hired employees, and requiring all subcontractors to provide an affidavit attesting that the subcontractor does not employ, contract with, or subcontract with, an unauthorized alien. The contractor shall maintain a copy of such affidavit for the duration of the contract. Failure to comply will lead to termination of this Contract, or if a subcontractor knowingly violates the statute, the subcontract must be terminated immediately. If this contract is terminated for a violation of the statute by the Contractor, the Contractor may not be awarded a public contract for a period of 1 year after the date of termination.

Company Name: _____

Authorized Signature: _____

Print Name: _____

Title: _____

Date: _____

CITY OF OPA-LOCKA

RFQ NO: 23-1204200

SAFE STREETS AND ROADS FOR ALL (SS4A) COMPREHENSIVE SAFETY ACTION PLAN

The sealed proposals for **SAFE STREETS AND ROADS FOR ALL (SS4A) COMPREHENSIVE SAFETY ACTION PLAN** for the city of Opa-locka will be received at the City's Clerk Office, 780 Fisherman St, 4th Floor, Opa-locka, Florida 33054, **Monday, Dec. 04, 2023, at 2:00 pm.** Any RFQ Package received after the designated closing time will be returned unopened. The city will be accepting proposals by mail; however, it is your responsibility to submit your proposal by the due date. In addition, proposal may be submitted via www.demandstar.com (e-bid). The address to submit sealed proposal is listed below:

CITY OF OPA-LOCKA
Office of the City Clerk
780 Fisherman Street, 4th Floor
Opa-locka, Florida 33054

An original and six (6) copies for a total of seven (7) plus 1 copy of the proposal package on USB Flash Drive in PDF format shall be submitted in sealed envelopes/packages addressed to the City's Clerk Office and marked **RFP for Safe Streets and Roads for all (SS4A) Comprehensive Action Plan.**

Proposers desiring information for use in preparing proposal may obtain a set of such documents by visiting the city of Opa-locka website at https://www.opalockafl.gov or www.demandstar.com.

The City reserves the right to accept or reject all proposals and to waive any technicalities or irregularities therein. The City further reserves the right to award a contract to that proposer whose proposal best complies with the **RFP NO: 23-1204200** requirements. Proposers may not withdraw their proposal for a period of ninety (90) days from the date set for the opening thereof.

City Clerk
Joanna Flores

Outside Entity Human Resources Director

RFP#23-1107100

ADDENDUM-01

Please see responses to all questions asked to date.

1. Does the city currently have a Human Resources Director and staff?
   The city does not have an HR Director; however the department does have staff.

   a. How many HR staff persons if any?
      The department is currently budgeted for four (4) positions, however three (3) are currently vacant.

   b. Will the current staff remain with the city or is selected firm expected to augment city staff?
      The current staff will remain. The city shall fill its vacant HR positions.

2. How many employees does the city currently have?
   167 Full and Part-time employees.

3. Is the HR responsible for benefits, retirement/pensions or any other fringes?
   Yes

4. Is payroll handled separately from HR?
   Yes, payroll is handled by the city's Finance Department.

5. What is the overall spend of this opportunity?
   The overall spend has not be determined.

6. Is this a single placement of a HR Director or are you looking for a consulting firm to take over all HR functions?
   Single Placement to serve as the city's Human Resources Director.

7. Is this a single or multiple award?
   This is a single award.

8. If this is a single placement of a HR Director would you be looking for a fee of their annualized salary or a bill rate of an hourly rate?
   This is an RFQ (Request for Qualifications), therefore it is at the discretion of the proposer.

Sponsored by: City Commission

RESOLUTION NO. 23-181

A RESOLUTION OF THE CITY COMMISSION OF THE CITY OF OPA-LOCKA, FLORIDA, AUTHORIZING THE INTERIM CITY MANAGER TO EXECUTE AN AGREEMENT WITH THE EMPLOYEE RELATIONS GROUP LLC TO SERVE AS THE CITY'S OUTSIDE ENTITY HUMAN RESOURCES DIRECTOR; PROVIDING FOR INCORPORATION OF RECITALS; PROVIDING FOR CONFLICT; PROVIDING FOR AN EFFECTIVE DATE

WHEREAS, due to the departure of the City of Opa-Locka's Human Resources Director, it has become necessary for the City Commission to secure a Human Resources Director to provide Human Resources responsibilities to the City of Opa-Locka ("City"); and

WHEREAS, at the October 11, 2023 Regular City Commission meeting, the City Commission of the City of Opa-Locka approved Resolution 23-150 to release a Request for Qualifications ("RFQ") authorizing a procurement process for an outside entity firm or professional to serve as the Human Resources Director, with a procurement release date, a meeting for short-listed candidates and a selection to take place no later than the end of the Regular City Commission meeting on October 25, 2023; and

WHEREAS, later, pursuant to Resolution 23-150, the Interim City Manager was required to select a firm or professional from the two short-listed firms and/or professionals approved by the City Commission, no later than the end of the Regular Commission meeting of October 25, 2023; and

WHEREAS, during the regular City Commission meeting held on November 8, 2023, the City Commission expressed a desire to allow the Interim City Manager additional time to negotiate and select from the two (2) shortlisted candidates no later than 5:00 PM on Monday, November 13, 2023; and

WHEREAS, the City Commission shortlisted two candidates for Outside Entity Human Resources Director and the Interim City Manager was required to negotiate with the shortlisted candidates, and report back to each City Commissioner with his selection no later than 5:00 PM on November 13, 2023; and

WHEREAS, the Interim City Manager was further authorized to initiate services and and enter into an agreement in a form approved by the City Attorney. These terms and conditions were approved by the State of Florida on or about November 16, 2023; and

WHEREAS, as of November 29, 2023, because no contract has been entered into, the City Commission held a special meeting and now desires to authorize the immediate execution of the agreement attached hereto as Exhibit "A" ; and

WHEREAS, the City Commission of the City of Opa-Locka, Florida finds that it is in the best interest of the City and its residents to strictly adhere to this resolution.

NOW THEREFORE, BE IT RESOLVED BY THE CITY COMMISSION OF THE CITY OF OPA LOCKA, FLORIDA:

SECTION 1. RECITALS ADOPTED.
The recitals to the preamble herein are incorporated by reference.

SECTION 2. AUTHORIZATION
The City Commission of the City of Opa-Locka, Florida hereby authorizes its Interim City Manager to execute an agreement with The Employee Relations Group to serve as the Outside Entity Human Resources Director pursuant to the terms and conditions set forth in the Agreement attached hereto as Exhibit "A".

SECTION 3. SCRIVENER'S ERRORS.
Sections of this Resolution may be renumbered or re-lettered and corrections of typographical errors, which do not affect the intent of this Resolution may be authorized by the City Attorney without need of public hearing, by filing a corrected copy of same with the City Clerk.

SECTION 4. CONFLICT
To the extent that there is conflict with this Resolution and any prior Resolution or policy of the City, this Resolution shall control.

SECTION 5. EFFECTIVE DATE
This Resolution shall take effect upon the adoption and shall be provided to Governor or Governor's Designee.

PASSED and **ADOPTED** this 29th day of November 2023.

ATTEST:

Joanna Flores, City Clerk

John Taylor, Mayor

APPROVED AS TO FORM AND
LEGAL SUFFICIENCY:

Burnadette Norris-Weeks, P.A.
City Attorney

Moved by: Commissioner Williams

Seconded by: Commissioner Bass

VOTE:	3-2
Commissioner Bass	NO
Commissioner Kelley	YES
Commissioner Williams	YES
Vice Mayor Ervin	NO
Mayor Taylor	YES

Sponsored by: Interim City Manager

RESOLUTION NO. XX-XXXX

A RESOLUTION OF THE CITY COMMISSION OF THE CITY OF OPA-LOCKA, FLORIDA, AUTHORIZING THE INTERIM CITY MANAGER TO ENTER INTO AND EXECUTE A VOLUNTARY COOPERATION AND OPERATIONAL ASSISTANCE MUTUAL AID AGREEMENT BETWEEN THE CITY OF OPA-LOCKA, FLORIDA AND THE BAY HARBOR ISLANDS POLICE DEPARTMENT, ATTACHED HERETO AS EXHIBIT "A", FOR LAW ENFORCEMENT SERVICES AND RESOURCES; PROVIDING FOR INCORPORATION OF RECITALS; PROVIDING FOR AN EFFECTIVE DATE.

WHEREAS, the City of Opa-Locka, Florida ("City"), and the Bay Harbor Islands Police Department, are authorized to enter into a Mutual Aid Agreement ("MAA") pursuant to Section 23.12, Florida Statutes, Florida Mutual Aid Act; and

WHEREAS, the Mutual Aid Agreement with the Bay Harbor Islands Police Department provides for requesting and rendering of mutual aid in the form of law enforcement services to adequately respond to continuing multi-jurisdictional law enforcement problems, so as to protect the public peace and safety, and preserve the lives and property of the people; and

WHEREAS, the City Commission of the City of Opa-Locka desires to authorize the Interim City Manager to enter into and execute a Mutual Aid Agreement with the Bay Harbor Islands Police Department, attached hereto as Exhibit "A".

NOW THEREFORE, BE IT RESOLVED BY THE CITY COMMISSION OF THE CITY OF OPA LOCKA, FLORIDA:

Section 1. RECITALS ADOPTED.

The recitals to the preamble herein are incorporated by reference.

Section 2. AUTHORIZATION

The City Commission of the City of Opa-Locka hereby authorizes and directs the Interim City Manager to enter into and execute an operational assistance Mutual Aid Agreement ("MAA") with the Bay Harbor Islands Police Department, for law enforcement services and resources, attached hereto as Exhibit "A".

SECTION 3. SCRIVENER'S ERRORS.

Sections of this Resolution may be renumbered or re-lettered and corrections of typographical errors which do not affect the intent may be authorized by the Interim City Manager, following review by the City Attorney and without need of public hearing, by filing a corrected copy of same with the City.

Section 4. EFFECTIVE DATE.
This Resolution shall take effect immediately upon adoption and is subject to the approval of the Governor or his designee.

PASSED and **ADOPTED** this _____ day of _____, 2024.

_____
John Taylor, Mayor

ATTEST:

_____
Joanna Flores, City Clerk

APPROVED AS TO FORM
AND LEGAL SUFFICIENCY:

_____
Burnadette Norris-Weeks, P.A.

Moved by: _____

Seconded by: _____

VOTE:

Commissioner Bass	_____
Commissioner Santiago	_____
Commissioner Ervin	_____
Vice Mayor Kelley	_____
Mayor Taylor	_____

City of Opa-locka
Agenda Cover Memo

Department Director:	Chief of Police Kenneth D. Ottley		**Department Director Signature:**				
City Manager:	Interim City Manager Sha'mecca Lawson		**CM Signature:**				
Commission Meeting Date:	December 11, 2024	**Item Type:** *(Enter X in box)*	**Resolution**	**Ordinance**		**Other**	
			X				
Fiscal Impact: *(Enter X in box)*	**Yes**	**No**	**Ordinance Reading:** *(Enter X in box)*	**1st Reading**		**2nd Reading**	
		X	**Public Hearing:** *(Enter X in box)*	**Yes**	**No**	**Yes**	**No**
					X		X
Funding Source: *Account#* **:**	*(Enter Fund & Dept)* Ex: None		**Advertising Requirement:** *(Enter X in box)*	**Yes**		**No**	
						X	
Contract/P.O. Required: *(Enter X in box)*	**Yes**	**No**	**RFP/RFQ/Bid#:**				
		X					
Strategic Plan Related *(Enter X in box)*	**Yes**	**No**	**Strategic Plan Priority Area:** **Enhance Organizational** ☐ **Bus. & Economic Dev** ☐ **Public Safety** ■ **Quality of Education** ☐ **Qual. of Life & City Image** ☐ **Communication** ☐	**Strategic Plan Obj./Strategy:** *(list the specific objective/strategy this item will address)* To enhance public safety.			
	X						
Sponsor Name	City Manager		**Department: Police Department**	City Manager			

Short Title:

A RESOLUTION OF THE CITY COMMISSION OF THE CITY OF OPA-LOCKA, FLORIDA, AUTHORIZING THE INTERIM CITY MANAGER TO ENTER INTO AN AGREEMENT WITH THE BAY HARBOR ISLANDS POLICE DEPARTMENT, MIAMI, FLORIDA FOR THE VOLUNTARY COOPERATION AND OPERATIONAL ASSISTANCE MUTUAL AID AGREEMENT; PROVIDING FOR INCORPORATION OF RECITALS; PROVIDING FOR AN EFFECTIVE DATE.

Staff Summary:

This is a Mutual Aid Agreement between the City of Opa-locka and the Bay Harbor Islands Police Department to receive and extend mutual aid in the form of law enforcement services to adequately respond to continuing multi-jurisdictional law enforcement problems, so as to protect the public peace and safety, and preserve the lives and property of the people.

Financial Impact: None

Proposed Action:

Staff recommends the Commission approve this resolution and authorize the City Manager to sign the Mutual Aid Agreement with the City of Miami, Florida.

Attachment:

1. Bay Harbor Islands Police Department, Miami, Florida Mutual Aid Agreement

Town Council

Joshua D. Fuller
Mayor

Isaac Salver
Vice Mayor

Stephanie Bruder
Council Member

Molly Diallo
Council Member

Teri D' Amico
Council Member

Eric Rappaport
Council Member

Robert Yaffe
Council Member

Town Officials

Jenice Rosado
Town Manager

Yvonne P. Hamilton
Town Clerk

Greenspoon Marder LLP
Town Attorneys
By: Joseph S. Geller, Esq.

November 18, 2024

Chief Kenneth D. Ottley
City of Opa Locka
780 Fisherman Street
Opa-locka, FL 33054

Re: Mutual Aid Agreement with Bay Harbor Islands

Dear Chief Ottley:

Attached is an original executed copy of the referenced Mutual Aid Agreement. Please assist with obtaining the other signatures and return a signed copy to my office.

Should you have any questions, please feel free to contact me.

Sincerely,

Yvonne P. Hamilton
Town Clerk

LAW ENFORCEMENT MUTUAL AID AGREEMENT

BETWEEN THE CITY OF OPA-LOCKA AND THE TOWN OF BAY HARBOR ISLANDS

FOR VOLUNTARY COOPERATION AND OPERATIONAL ASSISTANCE

WHEREAS, it is the responsibility of the government of the City of Opa-locka, Florida and the subscribing municipality to ensure the public safety of their citizens by providing adequate levels of police services to address any foreseeable routine or emergency situation; and

WHEREAS, there is an existing and continuing possibility of the occurrence of natural or manmade disasters or emergencies and other major law enforcement problems, including those that cross jurisdictional lines, that will require coordinated law enforcement efforts to ensure that preparations of this City will be adequate to deal with such activity, protect the public peace and safety, and preserve the lives and property of the people of the City; and

WHEREAS, in order to ensure that law enforcement agencies are prepared to competently address any and all conditions as they arise to protect the public peace and safety of the City of Opa-locka citizens, it is in the best interest of the community and law enforcement for police agencies to engage in mutual aid; and

WHEREAS, the subscribing law enforcement agencies have the authority under Florida Statutes Chapter 23, Part 1, Florida Mutual Aid Act, and under Florida Statutes Section 316.640, Enforcement, to enter into a Mutual Aid Agreement.

NOW, THEREFORE, BE IT KNOWN that the City of Opa-locka, a political subdivision of the State of Florida and the undersigned municipality, in consideration for mutual promises to

render valuable aid in times of necessity, do hereby agree to fully and faithfully abide by and be bound by the following terms and conditions:

SECTION I. PURPOSE AND TERMS

A. Short Title: Mutual Aid Agreement

B. Description: Since this Mutual Aid Agreement provides for the requesting and rendering of assistance for both routine and law enforcement intensive situations, this Mutual Aid Agreement combines the elements of both a voluntary cooperation agreement and a requested operational assistance agreement, as described in Chapter 23, Part I, Florida Statues.

C. Definitions:

1. Chief Executive Official: Either the Commission of the City of Opa-locka, or the Chief Executive Official of the participating municipality, who has the authority to contractually bind the agency and has executed this Agreement, upon approval of the governing body of each entity.
2. Agency Head: Either the Chief of the Opa-locka Police Department or the Chief's designee; and the Chief of Police of the municipal law enforcement agency, or the Chief's designee.
3. Participating Law Enforcement Agency: The police department of any law enforcement agency in Miami-Dade County, Florida, that has approved and executed this Agreement.
4. Certified Law Enforcement Employee: Any law enforcement employee certified as provided in Chapter 943, Florida Statues.

SECTION II. PROCEDURES

A. Operations:

1. In the event that a party to this Agreement is in need of assistance as specified herein, an authorized representative of the police department requiring assistance shall notify the agency from which such assistance is requested. The authorized agency representative whose assistance is sought shall evaluate the situation and the available resources, and will respond in a manner deemed appropriate.
2. Each party to this Agreement agrees to furnish necessary personnel, equipment, facilities, and other resources and to render services to the other party as required to assist the requesting party in addressing the situation which necessitated the request; provided, however, that no party shall be required to deplete unreasonably its own personnel, equipment, facilities, and other resources and services in rendering such assistance.
3. The Agency Heads of the participating law enforcement agencies, or their designees, shall establish procedures for giving control of the mission definition to the requesting agency, and for giving tactical control over accomplishing any such assigned mission and supervisory control over all personnel, equipment, facilities, and other resources and services provided pursuant to this Agreement to the providing agency.

B. Powers, Privileges, Immunities, and Costs:

1. All employees of the participating law enforcement agency, including certified law enforcement employees, during such time that said employees are actually providing aid outside of the jurisdictional limits of their employing agency pursuant to a request for aid made in accordance with this Agreement, shall, pursuant to the provisions of this Mutual Aid Agreement, have the same powers, duties, rights, privileges, and immunities as if they were performing duties in the jurisdiction in which they are normally employed.
2. The political subdivision having financial responsibility for the participating law enforcement agency providing personnel, equipment, facilities, and other resources and services pursuant to the provisions of this Agreement shall bear any loss or damage to same and shall pay any and all expenses incurred in the maintenance and operation of same.
3. The political subdivision having financial responsibility for the participating law enforcement agency providing aid pursuant to this Agreement shall compensate all of its employees rendering of such aid, and shall defray the actual travel and maintenance expenses of such employees while they are rendering such aid. Such compensation shall include any amounts paid or due for compensation due to personal injury or death which such employees are engaged in rendering such aid. Such compensation shall also include all benefits normally due to such employees.

4. All exemption from ordinances and rules, and all pension, insurance, relief, disability, workers' compensation, salary, death, and other benefits which apply to the activity of such officers, agents, or employees of any such agency when performing their respective functions within the territorial limits of their respective agencies shall apply to them to the same degree, manner, and extent while engaged in the performance of their functions and duties extra territorially under the provisions of this Mutual Aid Agreement. The provisions of this Agreement shall apply with equal effect to paid and auxiliary employees.

C. Indemnification: Each party engaging in any mutual cooperation and assistance pursuant to this Agreement agrees to assume responsibility for the acts, omission, or conduct of such party's own employees while participating herein and pursuant to this Agreement, subject to the provisions of Section 768.28, Florida Statues, where applicable. "Assume Responsibility" shall mean incurring any and all costs associated with any suit, action or claim for damages arising from the performance of this Agreement.

D. Forfeitures: It is recognized that during the course of the operation of this Agreement, property subject to forfeiture under the Florida Contraband Forfeiture Act, Section 932.701 et. seq., Florida Statues, may be seized. The property shall be seized, forfeited, and equitably distributed among the participating agencies in proportion to the amount of investigation and participation performed by each agency, less the costs associated with the forfeiture action. Any participating law

enforcement agency must request sharing, in writing, before the entry of a Final Order of Forfeiture, or they will be barred from claiming any portion of the property forfeited. The agency pursing the forfeiture action shall have the exclusive right to control and the responsibility to maintain the property, including, but not limited to, the complete discretion to bring the action, or to dismiss the action, or to settle, pursuant to the provisions of the Florida Contraband Forfeiture Act.

E. Conflicts: Any conflicts between this Agreement and the Florida Mutual Aid Act will be controlled by the provisions of the latter, whenever conditions exist that are within the definitions stated in Chapter 23, Part I, Florida Statues.

SECTION III. COMMAND AND SUPERVISORY RESPONSIBILITY

A. Command: The personnel, equipment, facilities, and other resources and services that are assigned by the assisting entity shall be under the immediate command and direct supervision of a supervising officer designated by the assisting Director or Chief of Police, or his/her designee.

B. Conflicts: Whenever an officer is rendering assistance pursuant to this Agreement, the officer shall abide by and be subject to the rules and regulations, personnel policies, general orders, and standard operating procedures of his or her own employer. If any such rule, regulation, personnel policy, general order or standard operating procedure is contradicted, contravened or otherwise in conflict with a direct order of a superior officer of the requesting agency, then such rule, regulation, policy, general order or procedure of the assisting agency shall control, and shall supersede the direct order.

C. Complaints: Whenever there is cause to believe that a complaint has arisen as a result of a cooperative effort as it may pertain to this Agreement, the Director or Chief of Police, or his/her designee, of the agency employing the officer who is the subject of the complaint, shall be responsible for the investigation of the complaint. The Director or Chief of Police or designee of the requesting agency should ascertain at a minimum:

1. The identity of the complainant;
2. An address where the complaining party can be contacted;
3. The specific allegation, and;
4. The identity of the employee accused.

If it is determined during the investigation of a complaint that the accused is an employee of the assisting agency, the above information, with all pertinent documentation gathered during the receipt and processing of the complaint, shall be forwarded without delay to the assisting agency for administrative review. The requesting agency may conduct a review of the complaint to determine if any factual basis for the complaint exists and/or whether any of the employees of the requesting agency violated any of their agency's policies or procedures.

SECTION IV. PROVISIONS FOR VOLUNTARY AND OPERATIONAL ASSISTANCE

A. A deputy sheriff or police officer of either participating law enforcement agency shall be considered to be operating under the provisions of this Mutual Aid Agreement when participating in law enforcement activities that are preplanned and

approved by each respective agency head, or appropriately dispatched in response to a request for assistance from the other law enforcement agency.

B. In compliance with and under the authority of this Mutual Aid Agreement, entered into by the City of Opa-locka and the participating municipality, it is hereby declared that the following list comprises the nature of assistance, and the circumstances and conditions under which mutual aid may be requested and rendered regarding police operations pursuant to the Agreement. The list includes, but is not necessarily limited to, dealing with the following:

1. Voluntary:
    a. Joint multi-jurisdictional criminal investigations.
    b. Major events; e.g., sporting events, concerts, parades, fairs, festivals and conventions.
    c. Joint training in areas of mutual need.
    d. Off-duty special events or other off-duty police services.
    e. Joint multi-jurisdictional marine interdiction operations.
    f. Security and escort duties for dignitaries.
2. Operational:
    a. Hostage and barricaded subject situations, and aircraft piracy.
    b. Control of major crime scenes, area searches, perimeter control, back-ups to emergency and in-progress calls, pursuits, and missing person calls.
    c. Enemy attack.

d. Transportation of evidence requiring security.

e. Civil affray or disobedience, disturbances, riots, large protest demonstrations, controversial trials, political conventions, labor disputes, and strikes.

f. Any natural, technological, or manmade disaster. Emergency situations in which one agency cannot perform its functional objective.

g. Incidents requiring utilization of specialized units; e.g., underwater recovery, aircraft, canine, motorcycle, bicycle, mounted, Special Response Teams, bomb, crime scene, marine patrol, and police information.

h. Incidents which require rescue operations and crowd and traffic control measures including, but not limited to, large-scale evacuations, aircraft and shipping disasters, fires, explosions, gas line leaks, radiological incidents, train wrecks and derailments, chemical and hazardous waste spills, and electrical power failures.

i. Terrorist activities including, but not limited to, acts of sabotage.

j. Escapes from or disturbances within detention facilities.

SECTION V. PROCEDURES FOR REQUESTING MUTUAL AID

The following procedures will apply to situations requiring operational assistance:

A. Mutual aid requested or rendered will be approved by the Director or Chief of Police or their designee(s).

B. Specific reporting instructions for personnel rendering mutual aid should be included in the request for mutual aid. In the absence of such instructions, personnel will report to the ranking on-duty supervisor on the scene.

C. Communication instructions will be included in each request for mutual aid. The Miami-Dade Police Department Communications Bureau will maintain radio contact with the involved agencies until the mutual aid situation has ended.

D. Incidents requiring mass processing of arrestees, transporting prisoners and operating temporary detention facilities will be handled per established procedures.

SECTION VI. CONCURRENT JURISDICTION

It is to the mutual benefit of the participating law enforcement agency and the City of Opa-locka Police Department, through voluntary cooperation, to exercise concurrent jurisdiction over the areas described in subparagraphs A. and B. below, in that officers, while in another jurisdiction, are often present in events where immediate action is necessary, or are able to expeditiously conclude an investigation by identifying and arresting an offender.

A. Concurrent law enforcement jurisdiction in and throughout the territorial limits of the participating municipalities located in Miami-Dade County and in unincorporated Miami-Dade County for arrests , for felonies and misdemeanors, including arrestable traffic offenses, which spontaneously take place in the presence of the arresting officer, at such times as the arresting officer is traveling from place to place on official business outside of his or her jurisdiction; for example, to or from court, provided that, in the context of this Agreement, "official business outside of his or her jurisdiction" shall not include routine patrol activities. This Agreement excludes

those areas within the territorial limits of any municipality not participating in Mutual Aid with the City of Opa-locka, and in any areas in which the City of Opa-locka does not have law enforcement jurisdiction.

B. Concurrent law enforcement jurisdiction in and throughout the territorial limits of the participating municipalities located in Miami-Dade County and in unincorporated Miami-Dade County, for arrests made pursuant to the laws of arrest of persons identified as a result of investigations of any offense constituting a felony of any act of domestic violence as defined in Section 741.28, Florida Statues, when such offense occurred in the jurisdiction of the agency employing the arresting officer. However, absent a search warrant, concurrent jurisdiction under this subparagraph does not include authority to make nonconsensual or forcible entries into private dwellings, residences, living spaces or business spaces which are not open to the public. Authority derived pursuant to this subparagraph may be exercised only when in places open to the public or private places into which the arresting officer has entered with the consent of an occupant entitled to give consent. When operating under mutual aid, participating agency officers may execute search warrants outside the jurisdiction of their employing municipality for offenses which occurred in their jurisdiction. Participating agency officers may execute the search warrant, impound all property, make arrests, and file the Return and Inventory. This concurrent jurisdiction excludes those areas within the territorial limits of any municipality not participating in mutual aid with the Opa-locka Police Department,

and in any areas in which the Opa-locka Police Department does not have law enforcement jurisdiction.

C. Prior to any officer taking enforcement action pursuant to either paragraph A. or B. above, the officer shall notify the designated officer of the jurisdiction in which the action will be taken, unless exigent circumstances prevent such prior notification, in which case notification shall be made as soon after the action as practicable. Furthermore, all arrests made pursuant to paragraph A. above shall be processed and coded pursuant to directions of the Clerk of the Court, in such manner as to ensure that any revenues or surcharges generated as a result of said arrests shall be directed to the jurisdiction in which the arrest was made.

D. General Requirements:

1. Officers shall not utilize unmarked vehicles to make traffic stops or to engage in vehicle pursuits.
2. Concurrent law enforcement jurisdiction pursuant to this Agreement does include preplanned operations, undercover investigations, stings or sweeps.
3. Officers shall not conduct routine patrol activities outside of their jurisdiction.
4. Reports of any action taken pursuant to this Agreement shall be faxed to the agency head of the agency within whose jurisdiction the action was taken, as soon as possible after the action.

5. Any conflicts regarding jurisdiction will be resolved by allowing the agency within whose jurisdiction the action took place to take custody of any arrestees and/or crime scenes.
6. All concurrent jurisdiction stationary surveillance activities shall require notification of the agency within whose jurisdiction the surveillance takes place. The notification shall include the general location of the surveillance, and a description of the vehicles involved. Mobile surveillance shall not require notification unless concurrent jurisdiction enforcement activities take place.

SECTION VII. EFFECTIVE DATE AND TERM OF AGREEMENT

This Mutual Aid Agreement shall be effective on the date of execution all parties and, unless terminated or cancelled on an earlier date, will expire on January 1, 2028. This Mutual Aid Agreement may be renewed in writing by the Agency Head and their respective Chief Executive Officials, in the case of the City of Opa-locka, the Police Chief and the City Commission are authorized to extend this Agreement. This Agreement may be formally renewed for a maximum of three (3) additional successive five (5) year terms. This Agreement may not be amended or modified except in writing signed and duly executed by the parties. Any modifications or amendments to this Agreement require the City of Opa-locka Commission approval via the City's legislative process.

SECTION VIII. CANCELLATION

This Agreement may be cancelled by either party upon providing thirty (30) days written notice to the other participating law enforcement agency. Cancellation will be at the discretion of the

Agency Heads and their respective Chief Executive Officials, in the case of the City of Opa-locka, the Chief of Police and the City Commission are authorized to cancel this Agreement.

AGREED TO AND ACKNOWLEDGED this _____ day of _____ ~~2023~~ 2024

CITY OF OPA-LOCKA, FLORIDA

_____
Kenneth D. Ottley
CHIEF OF POLICE
Date:_____

_____
Darvin E. Williams
CITY MANAGER
Date: _____

_____
John H. Taylor Jr.
CITY MAYOR
Date: _____

ATTEST:

_____
Joanna Flores
CITY CLERK

APPROVED AS TO FORM AND LEGAL SUFFICIENCY:

_____
Burnadette Norris-Weeks, Esq.
CITY ATTORNEY

TOWN OF BAY HARBOR ISLANDS, FLORIDA

_____
Lindsley Noel
CHIEF OF POLICE
Date: 10/3/2024

_____
Jenice Rosado
TOWN MANAGER
Date: 10/3/2024

_____
Joshua D. Fuller
TOWN MAYOR
Date: 10/3/2024

ATTEST:

_____
Yvonne P. Hamilton
TOWN CLERK

APPROVED AS TO FORM AND LEGAL SUFFICIENCY:

Greenspoon Marder, LLP
By: _____
TOWN ATTORNEYS

RESOLUTION NO. 2430

A RESOLUTION OF THE TOWN COUNCIL OF THE TOWN OF BAY HARBOR ISLANDS, FLORIDA APPROVING THE MUTUAL AID AGREEMENT AND JOINT DECLARATION BETWEEN THE TOWN OF BAY HARBOR ISLANDS AND THE CITY OF OPA-LOCKA FOR LAW ENFORCEMENT SERVICES; PROVIDING FOR INCORPORATION OF RECITALS; AND SETTING AN EFFECTIVE DATE.

WHEREAS, it is the responsibility of the governments of the Town of Bay Harbor Islands, Florida and the City of Opa-Locka, Florida, to ensure the public safety of their respective citizens by providing adequate levels of police services to address any foreseeable routine or emergency situations; and

WHEREAS, because of the existing and continuing possibility of the occurrence of law enforcement problems and other natural and man-made conditions which are, or likely to be, beyond the control of the services, personnel, equipment, or facilities of the Town of Bay Harbor Islands' Police Department or the City of Opa-Locka Police Department; and

WHEREAS, in order to ensure that preparation of these law enforcement agencies will be adequate to address any and all of these conditions, to protect the public peace and safety, and to preserve the lives and property of the people of the Town of Bay Harbor Islands, Florida and the City of Opa-Locka; and

WHEREAS, it is to the advantage of each law enforcement agency to receive and extend mutual aid in the form of law enforcement services and resources to adequately respond to:

(1) Continuing, multi-jurisdiction law enforcement problems, so as to protect the public peace and safety, and preserve the lives and property of the people; and

(2) Intensive situations including, but not limited to, emergencies as defined under Section 252.34 of the Florida Statutes, or requests for certain law enforcement services specified herein as defined under Section 23.1225 of the Florica Statutes; and

WHEREAS, the Town of Bay Harbor Islands and the City of Opa-Locka have the voluntary cooperation and assistance authority under the Florida Mutual Aid Act, Section 23.12-23.127 of the Florida Statutes, to enter into this Voluntary Cooperation and Operational Assistance Mutual Aid Agreement ("Cooperation Agreement") for law enforcement services which:

(1) Permits voluntary cooperation and operational assistance of a routine law enforcement nature across jurisdictional lines as allowed under Section 23.1225, of the Florida Statutes; and

(2) Provides for the rendering of assistance in law enforcement emergencies as defined in Section 252.34 of the Florida Statutes.

WHEREAS, the Town of Bay Harbor Islands and the City of Opa-Locka are desirous of entering into a Mutual Aid Agreement and Joint Declaration ("Exhibit 1") with each other to provide adequate levels of police service to ensure the public safety of their residents.

NOW, THEREFORE, BE IT RESOLVED BY THE TOWN COUNCIL OF THE TOWN OF BAY HARBOR ISLANDS:

Section 1. Recitals: The recitals listed above are incorporated in this Resolution as if fully set forth in this Resolution.

Section 2. Approval. The Town Council hereby approves the voluntary cooperation and operational assistance mutual aid agreement between the Town of Bay Harbor Islands and the City of Opa-Locka.

Section 3. Authority of Town Manager. The Town Manager is authorized to execute this Mutual Aid Agreement.

Section 4. Effective Date. This Resolution shall be effective upon adoption.

PASSED and ADOPTED this 12th day of September 2024.

JOSHUA D. FULLER, MAYOR

ATTEST:

YVONNE P. HAMILTON, TOWN CLERK

APPROVED AS TO FORM:

GREENSPOON MARDER LLP
TOWN ATTORNEYS
BY: Joseph S. Geller, Esq.

Sponsored by: Interim City Manager

RESOLUTION NO. _____

A RESOLUTION OF THE CITY COMMISSION OF THE CITY OF OPA-LOCKA, FLORIDA, AUTHORIZING THE INTERIM CITY MANAGER TO AMEND THE AGREEMENT WITH TYLER TECHNOLOGIES, INC. FOR THE INSTALLATION AND SUPPORT OF THE ENTERPRISE RESOURCE PLANNING (ERP) SYSTEM; PROVIDING FOR INCORPORATION OF RECITALS; PROVIDING FOR AN EFFECTIVE DATE.

WHEREAS, Pursuant to Resolution 22-014, the City of Opa-Locka ("City") piggybacked the Sourcewell Service Agreement with Tyler Technologies, Inc. for Public Sector and Education Administration Software Solutions with Related Services and entered into an agreement with Tyler Technologies, Inc. for the installation and support of the Firm's Enterprise Resource Planning (ERP) System, at a cost of One Million, Four Hundred Thirty Thousand, Two Hundred Dollars ($1,430,200.00); and

WHEREAS, the term of the agreement was initiated in September 10, 2022, but the services were later suspended; and

WHEREAS, the Interim City Manager has determined that is in the best interest of the City to amend the terms of the Agreement with Tyler Technologies, Inc. to ensure that the project and support can resume; and

WHEREAS, the Amendment, attached hereto as Exhibit "A", would require the City to remit payment to Tyler Technologies in the amount of Thirteen Thousand Five Hundred Fifty Dollars ($13,550.00) for Project Management services rendered prior to the project suspension; and

WHEREAS, there will be additional expenses for implementation and software development in the Fiscal Year 2025-2026 annual budget; and

WHEREAS, the City Commission finds that it is in the best interest of the City to amend the agreement with Tyler Technologies for the installation and support of Tyler Technologies, Inc.'s Enterprise Resource Planning (ERP) System, as provided herein in and attached.

NOW THEREFORE BE IT RESOLVED BY THE CITY COMMISSION OF THE CITY OF OPA LOCKA, FLORIDA:

Section 1. The recitals to the preamble herein are incorporated by reference.

Section 2. The City Commission of the City of Opa-Locka hereby authorizes the Interim City Manager to amend the agreement with Tyler Technologies for the installation and support of Tyler Technologies, Inc.'s Enterprise Resource Planning (ERP) System to resume services, as provided herein and in the form attached hereto as Exhibit "A".

Section 3. This Resolution shall take effect immediately upon adoption, and is subject to the review of the State of Florida Financial Emergency Oversight Board.

PASSED and **ADOPTED** this _____ day of _____, 2024.

_____
John Taylor, Mayor

ATTEST:

_____
Joanna Flores, City Clerk

APPROVED AS TO FORM AND LEGAL SUFFICIENCY:

_____
Burnadette Norris-Weeks, P.A.
City Attorney

Moved by: _____

Seconded by: _____

VOTE:

Commissioner Bass	_____
Commissioner Santiago	_____
Commissioner Ervin	_____
Vice Mayor Kelley	_____
Mayor Taylor	_____

City of Opa-locka
Agenda Cover Memo

Interim City Manager:	Shamecca Lawson			**ICM Signature**				
Commission Meeting Date:	12.11.2024		**Item Type:** *(Enter X in box)*	**Resolution**	**Ordinance**		**Other**	
				X				
Fiscal Impact: *(Enter X in box)*	**Yes**	**No**	**Resolution Reading:** *(Enter X in box)*		**1st Reading**		**2nd Reading**	
					X			
	X		**Public Hearing:** *(Enter X in box)*		**Yes**	**No**	**Yes**	**No**
					X			**X**
Funding Source: *Account#* **:**	*(Enter Fund & Dept)* Ex: N/A See Financial Impact section below		**Advertising Requirement:** *(Enter X in box)*		**Yes**		**No**	
					X			
ILA Required: *(Enter X in box)*	**Yes**	**No**	**RFP/RFQ/Bid#:**					
	X							
Strategic Plan Related *(Enter X in box)*	**Yes**	**No**	**Strategic Plan Priority Area:** **Enhance Organizational** ■ **Bus. & Economic Dev** ☐ **Public Safety** ☐ **Quality of Education** ☐ **Qual. of Life & City Image** ☐ **Communication** ☐		**Strategic Plan Obj./Strategy:** *(list the specific objective/strategy this item will address)*			
	X							
Sponsor Name	Interim City Manager		**Department:**		City Manager			

Short Title:

A RESOLUTION OF THE CITY COMMISSION OF THE CITY OF OPA-LOCKA, FLORIDA, AUTHORIZING THE INTERIM CITY MANAGER TO EXECUTE AN AMENDMENT TO THE AGREEMENT WITH TYLER TECHNOLOGIES.

Staff Summary:

The City desired to upgrade its central financial and ancillary functions due to its outdated and limited capability. Pursuant to Resolution 22-014, City Administration entered into an agreement with Tyler Technologies for the installation and support of the firm's Enterprise Resource Planning (ERP) Services. The term of the agreement was initiated in September 10, 2022. After execution, the provider's services were suspended. The Interim City Manager believes it is the best interest of the City to amend the terms of its agreement with Tyler Technologies to ensure the project may resume. Upon approval, the City will be required to remit payment to Tyler Technologies in the amount of $13,550 for Project Management services rendered prior to the project suspension.

Financial Impact: The installation of the ERP software is covered in the FY 25 adopted budget in account 85-512528 (IT-Software) which has a current balance of $891,842. This is a large software upgrade for the City and will have additional expenses for implementation and software development in the FY 26 annual budget.

Proposed Action:

Staff recommends the approval of an amendment to the agreement with Tyler Technologies.

Attachment:

Executed Agreement
Agreement Amendment
Resolution 22-014

AMENDMENT

This amendment ("Amendment") is effective as of the date of signature of the last party to sign as indicated below ("Amendment Effective Date"), by and between Tyler Technologies, Inc. ("Tyler") and the City of Opa Locka, Florida ("Client").

WHEREAS, Tyler and the Client are parties to an agreement dated September 10, 2022 ("Agreement"); and

WHEREAS, Tyler and Client agree to resume the project after a period of suspension; and

WHEREAS, Tyler and Client desire to amend the terms of the Agreement as provided herein.

NOW THEREFORE, in consideration of the mutual promises hereinafter contained, Tyler and the Client agree as follows:

1. The first sentence of section F(1) of the Agreement is revised to read as follows: The initial term of this Agreement is equal to the number of years indicated for SaaS Services in Exhibit A, commencing July 1, 2025, unless earlier terminated as set forth below.
2. The services in the attached sales quotation, incorporated herein as Exhibit 1, are hereby added to the Agreement.
3. Outstanding Fees.
    a. Upon the Amendment Effective Date, Client will remit payment of $13,550 for Project Management services delivered prior to the suspension of the project. Upon receipt of such payment, Tyler will waive the remaining $13,550 due for Project Management services delivered prior to project suspension.
    b. All outstanding SaaS Fees due under the Agreement are waived
4. This Amendment shall be governed by and construed in accordance with the terms and conditions of the Agreement.
5. Except as expressly indicated in this Amendment, all other terms and conditions of the Agreement shall remain in full force and effect.

IN WITNESS WHEREOF, the parties hereto have executed this Amendment as of the dates set forth below.

Tyler Technologies, Inc.	City of Opa Locka, Florida
By:_____	By:_____
Name:_____	Name:_____
Title:_____	Title:_____
Date:_____	Date:_____

Exhibit 1
Amendment Investment Summary

The following Amendment Investment Summary details the software, products, and services to be delivered by us to you under the Agreement. This Amendment Investment Summary is effective as of the Amendment Effective Date, despite any expiration date in the Amendment Investment Summary that may have lapsed as of the Amendment Effective Date.

Sales quotation to be inserted prior to amendment execution.

REMAINDER OF PAGE INTENTIONALLY LEFT BLANK

Quoted By:	Adam Griffiths
Quote Expiration:	04/01/25
Quote Name:	City of Opa-Locka-ERP-Project Management Services
Quote Description:	Tyler EERP (Restart)- Project Management Services

Sales Quotation For:

City of Opa-locka
3400 NW 135th St
Opa Locka FL 33054-4708

Shipping Address:

Professional Services

Description	Quantity	Unit Price	Ext Discount	Extended Price	Maintenance
50% of Dedicated Project Manager (Monthly)	2	$ 13,550.00	$ 0.00	$ 27,100.00	$ 0.00
TOTAL				**$ 27,100.00**	**$ 0.00**

Summary	One Time Fees	Recurring Fees
Total Tyler License Fees	$ 0.00	$ 0.00
Total SaaS	$ 0.00	$ 0.00
Total Tyler Services	$ 27,100.00	$ 0.00
Total Third-Party Hardware, Software, Services	$ 0.00	$ 0.00
Summary Total	**$ 27,100.00**	**$ 0.00**
Contract Total	**$ 27,100.00**	

SOFTWARE AS A SERVICE AGREEMENT

This Software as a Service Agreement is made between Tyler Technologies, Inc. and Client.

WHEREAS, Client is a member of Sourcewell (formerly known as National Joint Powers Alliance) ("Sourcewell") under member number 28871.

WHEREAS, Tyler participated in the competitive bid process in response to Sourcewell RFP #090320 by submitting a proposal, on which Sourcewell awarded Tyler a Sourcewell contract, numbered 090320-TTI (hereinafter, the "Sourcewell Contract");

WHEREAS, documentation of the Sourcewell competitive bid process, as well as Tyler's contract with and pricing information for Sourcewell is available at https://sourcewell-mn.gov/cooperative-purchasing/; and

WHEREAS, Client desires to purchase off the Sourcewell Contract to procure software functionality from Tyler, which Tyler agrees to deliver pursuant to the Sourcewell Contract and under the terms and conditions set forth below;

NOW THEREFORE, in consideration of the foregoing and of the mutual covenants and promises set forth in this Agreement, Tyler and Client agree as follows:

SECTION A – DEFINITIONS

- **"Agreement"** means this Software as a Service Agreement.
- **"Business Travel Policy"** means our business travel policy. A copy of our current Business Travel Policy is attached as Schedule 1 to Exhibit B.
- **"Client"** means City of Opa-Locka, Florida.
- **"Data"** means your data necessary to utilize the Tyler Software.
- **"Data Storage Capacity"** means the contracted amount of storage capacity for your Data identified in the Investment Summary.
- **"Defect"** means a failure of the Tyler Software to substantially conform to the functional descriptions set forth in our written proposal to you, or their functional equivalent. Future functionality may be updated, modified, or otherwise enhanced through our maintenance and support services, and the governing functional descriptions for such future functionality will be set forth in our then-current Documentation.
- **"Defined Users"** means the number of users that are authorized to use the SaaS Services. The Defined Users for the Agreement are as identified in the Investment Summary. If Exhibit A contains EnerGov labeled software, defined users mean the maximum number of named users that are authorized to use the EnerGov labeled modules as indicated in the Investment Summary.

- **"Developer"** means a third party who owns the intellectual property rights to Third Party Software.
- **"Documentation"** means any online or written documentation related to the use or functionality of the Tyler Software that we provide or otherwise make available to you, including instructions, user guides, manuals and other training or self-help documentation.
- **"Effective Date"** means the date by which both your and our authorized representatives have signed the Agreement.
- **"Force Majeure"** means an event beyond the reasonable control of you or us, including, without limitation, governmental action, war, riot or civil commotion, fire, natural disaster, or any other cause that could not with reasonable diligence be foreseen or prevented by you or us.
- **"Investment Summary"** means the agreed upon cost proposal for the products and services attached as Exhibit A.
- **"Invoicing and Payment Policy"** means the invoicing and payment policy. A copy of our current Invoicing and Payment Policy is attached as Exhibit B.
- **"Order Form"** means an ordering document that includes a quote or investment summary and specifying the items to be provided by Tyler to Client, including any addenda and supplements thereto.
- **"SaaS Fees"** means the fees for the SaaS Services identified in the Investment Summary.
- **"SaaS Services"** means software as a service consisting of system administration, system management, and system monitoring activities that Tyler performs for the Tyler Software, and includes the right to access and use the Tyler Software, receive maintenance and support on the Tyler Software, including Downtime resolution under the terms of the SLA, and Data storage and archiving. SaaS Services do not include support of an operating system or hardware, support outside of our normal business hours, or training, consulting or other professional services.
- **"SLA"** means the service level agreement. A copy of our current SLA is attached hereto as Exhibit C.
- **"Statement of Work"** means the industry standard implementation plan describing how our professional services will be provided to implement the Tyler Software, and outlining your and our roles and responsibilities in connection with that implementation. The Statement of Work is attached as Exhibit E.
- **"Support Call Process"** means the support call process applicable to all of our customers who have licensed the Tyler Software. A copy of our current Support Call Process is attached as Schedule 1 to Exhibit C.
- **"Third Party Hardware"** means the third party hardware, if any, identified in the Investment Summary.
- **"Third Party Products"** means the Third Party Software and Third Party Hardware.
- **"Third Party Services"** means the third party services, if any, identified in the Investment Summary.
- **"Third Party Software"** means the third party software, if any, identified in the Investment Summary.
- **"Third Party SaaS Services"** means software as a service provided by a third party, if any, identified in the Investment Summary.
- **"Third Party Terms"** means, if any, the end user license agreement(s) or similar terms for the Third Party Products or other parties' products or services, as applicable, and attached or indicated at Exhibit D.
- **"Tyler"** means Tyler Technologies, Inc., a Delaware corporation.
- **"Tyler Software"** means our proprietary software, including any integrations, custom

modifications, and/or other related interfaces identified in the Investment Summary and licensed by us to you through this Agreement.

- **"we", "us", "our"** and similar terms mean Tyler.
- **"you"** and similar terms mean Client.

SECTION B – SAAS SERVICES

1. Rights Granted. We grant to you the non-exclusive, non-assignable limited right to use the SaaS Services solely for your internal business purposes for the number of Defined Users only. The Tyler Software will be made available to you according to the terms of the SLA. You acknowledge that we have no delivery obligations and we will not ship copies of the Tyler Software as part of the SaaS Services. You may use the SaaS Services to access updates and enhancements to the Tyler Software, as further described in Section C(9). The foregoing notwithstanding, to the extent we have sold you perpetual licenses for Tyler Software, if and listed in the Investment Summary, for which you are receiving SaaS Services, your rights to use such Tyler Software are perpetual, subject to the terms and conditions of this Agreement including, without limitation, Section B(4). We will make any such software available to you for download.

2. SaaS Fees. You agree to pay us the SaaS Fees. Those amounts are payable in accordance with our Invoicing and Payment Policy. The SaaS Fees are based on the number of Defined Users and amount of Data Storage Capacity. You may add additional users or additional data storage capacity on the terms set forth in Section H(1). In the event you regularly and/or meaningfully exceed the Defined Users or Data Storage Capacity, we reserve the right to charge you additional fees commensurate with the overage(s).

3. Ownership.

   3.1 We retain all ownership and intellectual property rights to the SaaS Services, the Tyler Software, and anything developed by us under this Agreement. You do not acquire under this Agreement any license to use the Tyler Software in excess of the scope and/or duration of the SaaS Services.

   3.2 The Documentation is licensed to you and may be used and copied by your employees for internal, non-commercial reference purposes only.

   3.3 You retain all ownership and intellectual property rights to the Data. You expressly recognize that except to the extent necessary to carry out our obligations contained in this Agreement, we do not create or endorse any Data used in connection with the SaaS Services.

4. Restrictions. You may not: (a) make the Tyler Software or Documentation resulting from the SaaS Services available in any manner to any third party for use in the third party's business operations; (b) modify, make derivative works of, disassemble, reverse compile, or reverse engineer any part of the SaaS Services; (c) access or use the SaaS Services in order to build or support, and/or assist a third party in building or supporting, products or services competitive to us; or (d) license, sell, rent, lease, transfer, assign, distribute, display, host, outsource, disclose, permit timesharing or service bureau use, or otherwise commercially exploit or make the SaaS Services, Tyler Software, or Documentation available to any third party other than as expressly permitted by this Agreement.

5. Software Warranty. We warrant that the Tyler Software will perform without Defects during the

term of this Agreement. If the Tyler Software does not perform as warranted, we will use all reasonable efforts, consistent with industry standards, to cure the Defect in accordance with the maintenance and support process set forth in Section C(9), below, the SLA and our then current Support Call Process.

6. SaaS Services.

6.1 Our SaaS Services are audited at least yearly in accordance with the AICPA's Statement on Standards for Attestation Engagements ("SSAE") No. 18. We have attained, and will maintain, SOC 1 and SOC 2 compliance, or its equivalent, for so long as you are timely paying for SaaS Services. The scope of audit coverage varies for some Tyler Software solutions. Upon execution of a mutually agreeable Non-Disclosure Agreement ("NDA"), we will provide you with a summary of our compliance report(s) or its equivalent. Every year thereafter, for so long as the NDA is in effect and in which you make a written request, we will provide that same information. If our SaaS Services are provided using a 3rd party data center, we will provide available compliance reports for that data center.

6.2 You will be hosted on shared hardware in a Tyler data center or in a third-party data center. In either event, databases containing your Data will be dedicated to you and inaccessible to our other customers.

6.3 Our Tyler data centers have fully-redundant telecommunications access, electrical power, and the required hardware to provide access to the Tyler Software in the event of a disaster or component failure. In the event of a data center failure, we reserve the right to employ our disaster recovery plan for resumption of the SaaS Services. In that event, we commit to a Recovery Point Objective ("RPO") of 24 hours and a Recovery Time Objective ("RTO") of 24 hours. RPO represents the maximum duration of time between the most recent recoverable copy of your hosted Data and subsequent data center failure. RTO represents the maximum duration of time following data center failure within which your access to the Tyler Software must be restored.

6.4 We conduct annual penetration testing of either the production network and/or web application to be performed. We will maintain industry standard intrusion detection and prevention systems to monitor malicious activity in the network and to log and block any such activity. We will provide you with a written or electronic record of the actions taken by us in the event that any unauthorized access to your database(s) is detected as a result of our security protocols. We will undertake an additional security audit, on terms and timing to be mutually agreed to by the parties, at your written request. You may not attempt to bypass or subvert security restrictions in the SaaS Services or environments related to the Tyler Software. Unauthorized attempts to access files, passwords or other confidential information, and unauthorized vulnerability and penetration test scanning of our network and systems (hosted or otherwise) is prohibited without the prior written approval of our IT Security Officer.

6.5 We test our disaster recovery plan on an annual basis. Our standard test is not client-specific. Should you request a client-specific disaster recovery test, we will work with you to schedule and execute such a test on a mutually agreeable schedule. At your written request, we will provide test results to you within a commercially reasonable timeframe after receipt of the request.

6.6 We will be responsible for importing back-up and verifying that you can log-in. You will be responsible for running reports and testing critical processes to verify the returned Data.

6.7 We provide secure Data transmission paths between each of your workstations and our servers.

6.8 Tyler data centers are accessible only by authorized personnel with a unique key entry. All other visitors to Tyler data centers must be signed in and accompanied by authorized personnel. Entry attempts to the data center are regularly audited by internal staff and external auditors to ensure no unauthorized access.

6.9 Where applicable with respect to our applications that take or process card payment data, we are responsible for the security of cardholder data that we possess, including functions relating to storing, processing, and transmitting of the cardholder data and affirm that, as of the Effective Date, we comply with applicable requirements to be considered PCI DSS compliant and have performed the necessary steps to validate compliance with the PCI DSS. We agree to supply the current status of our PCI DSS compliance program in the form of an official Attestation of Compliance, which can be found at https://www.tylertech.com/about-us/compliance, and in the event of any change in our status, will comply with applicable notice requirements.

SECTION C – PROFESSIONAL SERVICES

1. Professional Services. We will provide you the various implementation-related services itemized in the Investment Summary and described in the Statement of Work.

2. Professional Services Fees. You agree to pay us the professional services fees in the amounts set forth in the Investment Summary. Those amounts are payable in accordance with our Invoicing and Payment Policy. You acknowledge that the fees stated in the Investment Summary are good-faith estimates of the amount of time and materials required for your implementation. We will bill you the actual fees incurred based on the in-scope services provided to you. Any discrepancies in the total values set forth in the Investment Summary will be resolved by multiplying the applicable hourly rate by the quoted hours.

3. Additional Services. The Investment Summary contains, and the Statement of Work describes, the scope of services and related costs (including programming and/or interface estimates) required for the project based on our understanding of the specifications you supplied. If additional work is required, or if you use or request additional services, we will provide you with an addendum or change order, as applicable, outlining the costs for the additional work. The price quotes in the addendum or change order will be valid for thirty (30) days from the date of the quote.

4. Cancellation. If travel is required, we will make all reasonable efforts to schedule travel for our personnel, including arranging travel reservations, at least two (2) weeks in advance of commitments. Therefore, if you cancel services less than two (2) weeks in advance (other than for Force Majeure or breach by us), you will be liable for all (a) non-refundable expenses incurred by us on your behalf, and (b) daily fees associated with cancelled professional services if we are unable to reassign our personnel. We will make all reasonable efforts to reassign personnel in the event you cancel within two (2) weeks of scheduled commitments.

5. Services Warranty. We will perform the services in a professional, workmanlike manner, consistent with industry standards. In the event we provide services that do not conform to this warranty, we will re-perform such services at no additional cost to you.

6. Site Access and Requirements. At no cost to us, you agree to provide us with full and free access to your personnel, facilities, and equipment as may be reasonably necessary for us to provide implementation services, subject to any reasonable security protocols or other written policies provided to us as of the Effective Date, and thereafter as mutually agreed to by you and us.

7. Background Checks. For at least the past twelve (12) years, all of our employees have undergone criminal background checks prior to hire. All employees sign our confidentiality agreement and security policies.

8. Client Assistance. You acknowledge that the implementation of the Tyler Software is a cooperative process requiring the time and resources of your personnel. You agree to use all reasonable efforts to cooperate with and assist us as may be reasonably required to meet the agreed upon project deadlines and other milestones for implementation. This cooperation includes at least working with us to schedule the implementation-related services outlined in this Agreement. We will not be liable for failure to meet any deadlines and milestones when such failure is due to Force Majeure or to the failure by your personnel to provide such cooperation and assistance (either through action or omission).

9. Maintenance and Support. For so long as you timely pay your SaaS Fees according to the Invoicing and Payment Policy, then in addition to the terms set forth in the SLA and the Support Call Process, we will:

   9.1 perform our maintenance and support obligations in a professional, good, and workmanlike manner, consistent with industry standards, to resolve Defects in the Tyler Software (subject to any applicable release life cycle policy);

   9.2 provide support during our established support hours;

   9.3 maintain personnel that are sufficiently trained to be familiar with the Tyler Software and Third Party Software, if any, in order to provide maintenance and support services;

   9.4 make available to you all releases to the Tyler Software (including updates and enhancements) that we make generally available without additional charge to customers who have a maintenance and support agreement in effect; and

   9.5 provide non-Defect resolution support of prior releases of the Tyler Software in accordance with any applicable release life cycle policy.

We will use all reasonable efforts to perform support services remotely. Currently, we use a third-party secure unattended connectivity tool called Bomgar, as well as GotoAssist by Citrix. Therefore, you agree to maintain a high-speed internet connection capable of connecting us to your PCs and server(s). You agree to provide us with a login account and local administrative privileges as we may reasonably require to perform remote services. We will, at our option, use the secure connection to assist with

proper diagnosis and resolution, subject to any reasonably applicable security protocols. If we cannot resolve a support issue remotely, we may be required to provide onsite services. In such event, we will be responsible for our travel expenses, unless it is determined that the reason onsite support was required was a reason outside our control. Either way, you agree to provide us with full and free access to the Tyler Software, working space, adequate facilities within a reasonable distance from the equipment, and use of machines, attachments, features, or other equipment reasonably necessary for us to provide the maintenance and support services, all at no charge to us. We strongly recommend that you also maintain your VPN for backup connectivity purposes.

For the avoidance of doubt, SaaS Fees do not include the following services: (a) onsite support (unless Tyler cannot remotely correct a Defect in the Tyler Software, as set forth above); (b) application design; (c) other consulting services; or (d) support outside our normal business hours as listed in our then-current Support Call Process. Requested services such as those outlined in this section will be billed to you on a time and materials basis at our then current rates. You must request those services with at least one (1) weeks' advance notice.

SECTION D – THIRD PARTY PRODUCTS

1. Third Party Hardware. We will sell, deliver, and install onsite the Third Party Hardware, if you have purchased any, for the price set forth in the Investment Summary. Those amounts are payable in accordance with our Invoicing and Payment Policy.

2. Third Party Software. As part of the SaaS Services, you will receive access to the Third Party Software and related documentation for internal business purposes only. Your rights to the Third Party Software will be governed by the Third Party Terms.

3. Third Party Products Warranties.

   3.1 We are authorized by each Developer to grant access to the Third Party Software.

   3.2 The Third Party Hardware will be new and unused, and upon payment in full, you will receive free and clear title to the Third Party Hardware.

   3.3 You acknowledge that we are not the manufacturer of the Third Party Products. We do not warrant or guarantee the performance of the Third Party Products. However, we grant and pass through to you any warranty that we may receive from the Developer or supplier of the Third Party Products.

4. Third Party Services. If you have purchased Third Party Services, those services will be provided independent of Tyler by such third-party at the rates set forth in the Investment Summary and in accordance with our Invoicing and Payment Policy.

SECTION E - INVOICING AND PAYMENT; INVOICE DISPUTES

1. Invoicing and Payment. We will invoice you the SaaS Fees and fees for other professional services in the Investment Summary per our Invoicing and Payment Policy, subject to Section E(2).

2. Invoice Disputes. If you believe any delivered software or service does not conform to the

warranties in this Agreement, you will provide us with written notice within thirty (30) days of your receipt of the applicable invoice. The written notice must contain reasonable detail of the issues you contend are in dispute so that we can confirm the issue and respond to your notice with either a justification of the invoice, an adjustment to the invoice, or a proposal addressing the issues presented in your notice. We will work with you as may be necessary to develop an action plan that outlines reasonable steps to be taken by each of us to resolve any issues presented in your notice. You may withhold payment of the amount(s) actually in dispute, and only those amounts, until we complete the action items outlined in the plan. If we are unable to complete the action items outlined in the action plan because of your failure to complete the items agreed to be done by you, then you will remit full payment of the invoice. We reserve the right to suspend delivery of all SaaS Services, including maintenance and support services, if you fail to pay an invoice not disputed as described above within fifteen (15) days of notice of our intent to do so.

SECTION F – TERM AND TERMINATION

1. Term. The initial term of this Agreement is equal to the number of years indicated for SaaS Services in Exhibit A, commencing on the first day of the first month following the availability of the SaaS environment, unless earlier terminated as set forth below. If no duration is indicated in Exhibit A, the initial term is one (1) year. Upon expiration of the initial term, this Agreement will renew automatically for additional one (1) year renewal terms at our then-current SaaS Fees unless terminated in writing by either party at least sixty (60) days prior to the end of the then-current renewal term. Your right to access or use the Tyler Software and the SaaS Services will terminate at the end of this Agreement.

2. Termination. This Agreement may be terminated as set forth below. In the event of termination, you will pay us for all undisputed fees and expenses related to the software, products, and/or services you have received, or we have incurred or delivered, prior to the effective date of termination. Disputed fees and expenses in all terminations other than your termination for cause must have been submitted as invoice disputes in accordance with Section E(2).

   2.1 Failure to Pay SaaS Fees. You acknowledge that continued access to the SaaS Services is contingent upon your timely payment of SaaS Fees. If you fail to timely pay the SaaS Fees, we may discontinue the SaaS Services and deny your access to the Tyler Software. We may also terminate this Agreement if you don't cure such failure to pay within forty-five (45) days of receiving written notice of our intent to terminate.

   2.2 For Cause. If you believe we have materially breached this Agreement, you will invoke the Dispute Resolution clause set forth in Section H(3). You may terminate this Agreement for cause in the event we do not cure, or create a mutually agreeable action plan to address, a material breach of this Agreement within the thirty (30) day window set forth in Section H(3).

   2.3 Force Majeure. Either party has the right to terminate this Agreement if a Force Majeure event suspends performance of the SaaS Services for a period of forty-five (45) days or more.

   2.4 Lack of Appropriations. If you should not appropriate or otherwise make available funds sufficient to utilize the SaaS Services, you may unilaterally terminate this Agreement upon thirty (30) days written notice to us. You will not be entitled to a refund or offset of previously paid, but unused SaaS Fees. You agree not to use termination for lack of appropriations as a

substitute for termination for convenience.

SECTION G – INDEMNIFICATION, LIMITATION OF LIABILITY AND INSURANCE

1. Intellectual Property Infringement Indemnification.

   1.1 We will defend you against any third party claim(s) that the Tyler Software or Documentation infringes that third party's patent, copyright, or trademark, or misappropriates its trade secrets, and will pay the amount of any resulting adverse final judgment (or settlement to which we consent). You must notify us promptly in writing of the claim and give us sole control over its defense or settlement. You agree to provide us with reasonable assistance, cooperation, and information in defending the claim at our expense.

   1.2 Our obligations under this Section G(1) will not apply to the extent the claim or adverse final judgment is based on your use of the Tyler Software in contradiction of this Agreement, including with non-licensed third parties, or your willful infringement.

   1.3 If we receive information concerning an infringement or misappropriation claim related to the Tyler Software, we may, at our expense and without obligation to do so, either: (a) procure for you the right to continue its use; (b) modify it to make it non-infringing; or (c) replace it with a functional equivalent, in which case you will stop running the allegedly infringing Tyler Software immediately. Alternatively, we may decide to litigate the claim to judgment, in which case you may continue to use the Tyler Software consistent with the terms of this Agreement.

   1.4 If an infringement or misappropriation claim is fully litigated and your use of the Tyler Software is enjoined by a court of competent jurisdiction, in addition to paying any adverse final judgment (or settlement to which we consent), we will, at our option, either: (a) procure the right to continue its use; (b) modify it to make it non-infringing; or (c) replace it with a functional equivalent. This section provides your exclusive remedy for third party copyright, patent, or trademark infringement and trade secret misappropriation claims.

2. General Indemnification.

   2.1 We will indemnify and hold harmless you and your agents, officials, and employees from and against any and all third-party claims, losses, liabilities, damages, costs, and expenses (including reasonable attorney's fees and costs) for (a) personal injury or property damage to the extent caused by our negligence or willful misconduct; or (b) our violation of PCI-DSS requirements or a law applicable to our performance under this Agreement. You must notify us promptly in writing of the claim and give us sole control over its defense or settlement. You agree to provide us with reasonable assistance, cooperation, and information in defending the claim at our expense.

   2.2 To the extent permitted by applicable law, you will indemnify and hold harmless us and our agents, officials, and employees from and against any and all third-party claims, losses, liabilities, damages, costs, and expenses (including reasonable attorney's fees and costs) for personal injury or property damage to the extent caused by your negligence or willful misconduct; or (b) your violation of a law applicable to your performance under this Agreement. We will notify you promptly in writing of the claim and will give you sole control over its defense

or settlement. We agree to provide you with reasonable assistance, cooperation, and information in defending the claim at your expense.

3. DISCLAIMER. **EXCEPT FOR THE EXPRESS WARRANTIES PROVIDED IN THIS AGREEMENT AND TO THE MAXIMUM EXTENT PERMITTED BY APPLICABLE LAW, WE HEREBY DISCLAIM ALL OTHER WARRANTIES AND CONDITIONS, WHETHER EXPRESS, IMPLIED, OR STATUTORY, INCLUDING, BUT NOT LIMITED TO, ANY IMPLIED WARRANTIES, DUTIES, OR CONDITIONS OF MERCHANTABILITY OR FITNESS FOR A PARTICULAR PURPOSE.**

4. LIMITATION OF LIABILITY. **EXCEPT AS OTHERWISE EXPRESSLY SET FORTH IN THIS AGREEMENT, OUR LIABILITY FOR DAMAGES ARISING OUT OF THIS AGREEMENT, WHETHER BASED ON A THEORY OF CONTRACT OR TORT, INCLUDING NEGLIGENCE AND STRICT LIABILITY, SHALL BE LIMITED TO YOUR ACTUAL DIRECT DAMAGES, NOT TO EXCEED (A) DURING THE INITIAL TERM, AS SET FORTH IN SECTION F(1), TOTAL FEES PAID AS OF THE TIME OF THE CLAIM; OR (B) DURING ANY RENEWAL TERM, THE THEN-CURRENT ANNUAL SAAS FEES PAYABLE IN THAT RENEWAL TERM. THE PARTIES ACKNOWLEDGE AND AGREE THAT THE PRICES SET FORTH IN THIS AGREEMENT ARE SET IN RELIANCE UPON THIS LIMITATION OF LIABILITY AND TO THE MAXIMUM EXTENT ALLOWED UNDER APPLICABLE LAW, THE EXCLUSION OF CERTAIN DAMAGES, AND EACH SHALL APPLY REGARDLESS OF THE FAILURE OF AN ESSENTIAL PURPOSE OF ANY REMEDY. THE FOREGOING LIMITATION OF LIABILITY SHALL NOT APPLY TO CLAIMS THAT ARE SUBJECT TO SECTIONS G(1) AND G(2).**

5. EXCLUSION OF CERTAIN DAMAGES. **TO THE MAXIMUM EXTENT PERMITTED BY APPLICABLE LAW, IN NO EVENT SHALL WE BE LIABLE FOR ANY SPECIAL, INCIDENTAL, PUNITIVE, INDIRECT, OR CONSEQUENTIAL DAMAGES WHATSOEVER, EVEN IF WE HAVE BEEN ADVISED OF THE POSSIBILITY OF SUCH DAMAGES.**

6. Insurance. During the course of performing services under this Agreement, we agree to maintain the following levels of insurance: (a) Commercial General Liability of at least $1,000,000; (b) Automobile Liability of at least $1,000,000; (c) Professional Liability of at least $1,000,000; (d) Workers Compensation complying with applicable statutory requirements; and (e) Excess/Umbrella Liability of at least $5,000,000. We will add you as an additional insured to our Commercial General Liability and Automobile Liability policies, which will automatically add you as an additional insured to our Excess/Umbrella Liability policy as well. We will provide you with copies of certificates of insurance upon your written request.

SECTION H – GENERAL TERMS AND CONDITIONS

1. Additional Products and Services. You may purchase additional products and services at the rates set forth in the Investment Summary for twelve (12) months from the Effective Date by executing a mutually agreed addendum. If no rate is provided in the Investment Summary, or those twelve (12) months have expired, you may purchase additional products and services at our then-current list price, also by executing a mutually agreed addendum. The terms of this Agreement will control any such additional purchase(s), unless otherwise specifically provided in the addendum.

2. Optional Items. Pricing for any listed optional products and services in the Investment Summary will be valid for twelve (12) months from the Effective Date.

3. Dispute Resolution. You agree to provide us with written notice within thirty (30) days of becoming

aware of a dispute. You agree to cooperate with us in trying to reasonably resolve all disputes, including, if requested by either party, appointing a senior representative to meet and engage in good faith negotiations with our appointed senior representative. Senior representatives will convene within thirty (30) days of the written dispute notice, unless otherwise agreed. All meetings and discussions between senior representatives will be deemed confidential settlement discussions not subject to disclosure under Federal Rule of Evidence 408 or any similar applicable state rule. If we fail to resolve the dispute, then the parties shall participate in non-binding mediation in an effort to resolve the dispute. If the dispute remains unresolved after mediation, then either of us may assert our respective rights and remedies in a court of competent jurisdiction. Nothing in this section shall prevent you or us from seeking necessary injunctive relief during the dispute resolution procedures.

4. Taxes. The fees in the Investment Summary do not include any taxes, including, without limitation, sales, use, or excise tax. If you are a tax-exempt entity, you agree to provide us with a tax-exempt certificate. Otherwise, we will pay all applicable taxes to the proper authorities and you will reimburse us for such taxes. If you have a valid direct-pay permit, you agree to provide us with a copy. For clarity, we are responsible for paying our income taxes, both federal and state, as applicable, arising from our performance of this Agreement.

5. Nondiscrimination. We will not discriminate against any person employed or applying for employment concerning the performance of our responsibilities under this Agreement. This discrimination prohibition will apply to all matters of initial employment, tenure, and terms of employment, or otherwise with respect to any matter directly or indirectly relating to employment concerning race, color, religion, national origin, age, sex, sexual orientation, ancestry, disability that is unrelated to the individual's ability to perform the duties of a particular job or position, height, weight, marital status, or political affiliation. We will post, where appropriate, all notices related to nondiscrimination as may be required by applicable law.

6. E-Verify. We have complied, and will comply, with the E-Verify procedures administered by the U.S. Citizenship and Immigration Services Verification Division for all of our employees assigned to your project.

7. Subcontractors. We will not subcontract any services under this Agreement without your prior written consent, not to be unreasonably withheld.

8. Binding Effect; No Assignment. This Agreement shall be binding on, and shall be for the benefit of, either your or our successor(s) or permitted assign(s). Neither party may assign this Agreement without the prior written consent of the other party; provided, however, your consent is not required for an assignment by us as a result of a corporate reorganization, merger, acquisition, or purchase of substantially all of our assets.

9. Force Majeure. Except for your payment obligations, neither party will be liable for delays in performing its obligations under this Agreement to the extent that the delay is caused by Force Majeure; provided, however, that within ten (10) business days of the Force Majeure event, the party whose performance is delayed provides the other party with written notice explaining the cause and extent thereof, as well as a request for a reasonable time extension equal to the estimated duration of the Force Majeure event.

10. No Intended Third Party Beneficiaries. This Agreement is entered into solely for the benefit of you and us. No third party will be deemed a beneficiary of this Agreement, and no third party will have the right to make any claim or assert any right under this Agreement. This provision does not affect the rights of third parties under any Third Party Terms.

11. Entire Agreement; Amendment. This Agreement represents the entire agreement between you and us with respect to the subject matter hereof, and supersedes any prior agreements, understandings, and representations, whether written, oral, expressed, implied, or statutory. Purchase orders submitted by you, if any, are for your internal administrative purposes only, and the terms and conditions contained in those purchase orders will have no force or effect. This Agreement may only be modified by a written amendment signed by an authorized representative of each party.

12. Severability. If any term or provision of this Agreement is held invalid or unenforceable, the remainder of this Agreement will be considered valid and enforceable to the fullest extent permitted by law.

13. No Waiver. In the event that the terms and conditions of this Agreement are not strictly enforced by either party, such non-enforcement will not act as or be deemed to act as a waiver or modification of this Agreement, nor will such non-enforcement prevent such party from enforcing each and every term of this Agreement thereafter.

14. Independent Contractor. We are an independent contractor for all purposes under this Agreement.

15. Notices. All notices or communications required or permitted as a part of this Agreement, such as notice of an alleged material breach for a termination for cause or a dispute that must be submitted to dispute resolution, must be in writing and will be deemed delivered upon the earlier of the following: (a) actual receipt by the receiving party; (b) upon receipt by sender of a certified mail, return receipt signed by an employee or agent of the receiving party; (c) upon receipt by sender of proof of email delivery; or (d) if not actually received, five (5) days after deposit with the United States Postal Service authorized mail center with proper postage (certified mail, return receipt requested) affixed and addressed to the other party at the address set forth on the signature page hereto or such other address as the party may have designated by proper notice. The consequences for the failure to receive a notice due to improper notification by the intended receiving party of a change in address will be borne by the intended receiving party.

16. Client Lists. You agree that we may identify you by name in client lists, marketing presentations, and promotional materials.

17. Confidentiality. Both parties recognize that their respective employees and agents, in the course of performance of this Agreement, may be exposed to confidential information and that disclosure of such information could violate rights to private individuals and entities, including the parties. Confidential information is nonpublic information that a reasonable person would believe to be confidential and includes, without limitation, personal identifying information (*e.g.*, social security numbers) and trade secrets, each as defined by applicable state law. Each party agrees that it will not disclose any confidential information of the other party and further agrees to take all reasonable and appropriate action to prevent such disclosure by its employees or agents. The confidentiality covenants contained herein will survive the termination or cancellation of this Agreement. This obligation of confidentiality will not apply to information that:

(a) is in the public domain, either at the time of disclosure or afterwards, except by breach of this Agreement by a party or its employees or agents;
(b) a party can establish by reasonable proof was in that party's possession at the time of initial disclosure;
(c) a party receives from a third party who has a right to disclose it to the receiving party; or
(d) is the subject of a legitimate disclosure request under the open records laws or similar applicable public disclosure laws governing this Agreement; provided, however, that in the event you receive an open records or other similar applicable request, you will give us prompt notice and otherwise perform the functions required by applicable law.

18. Quarantining of Client Data. Some services provided by Tyler require us to be in possession of your Data. In the event we detect malware or other conditions associated with your Data that are reasonably suspected of putting Tyler resources or other Tyler clients' data at risk, we reserve the absolute right to move your Data from its location within a multi-tenancy Tyler hosted environment to an isolated "quarantined" environment without advance notice. Your Data will remain in such quarantine for a period of at least six (6) months during which time we will review the Data, and all traffic associated with the Data, for signs of malware or other similar issues. If no issues are detected through such reviews during the six (6) month period of quarantine, we will coordinate with you the restoration of your Data to a non-quarantined environment. In the event your Data must remain in quarantine beyond this six (6) month period through no fault of Tyler's, we reserve the right to require payment of additional fees for the extended duration of quarantine. We will provide an estimate of what those costs will be upon your request.

19. Business License. In the event a local business license is required for us to perform services hereunder, you will promptly notify us and provide us with the necessary paperwork and/or contact information so that we may timely obtain such license.

20. Governing Law. This Agreement will be governed by and construed in accordance with the laws of your state of domicile, without regard to its rules on conflicts of law.

21. Multiple Originals and Authorized Signatures. This Agreement may be executed in multiple originals, any of which will be independently treated as an original document. Any electronic, faxed, scanned, photocopied, or similarly reproduced signature on this Agreement or any amendment hereto will be deemed an original signature and will be fully enforceable as if an original signature. Each party represents to the other that the signatory set forth below is duly authorized to bind that party to this Agreement.

22. Cooperative Procurement. To the maximum extent permitted by applicable law, we agree that this Agreement may be used as a cooperative procurement vehicle by eligible jurisdictions. We reserve the right to negotiate and customize the terms and conditions set forth herein, including but not limited to pricing, to the scope and circumstances of that cooperative procurement.

23. Contract Documents. This Agreement includes the following exhibits:

Exhibit A	Investment Summary
Exhibit B	Invoicing and Payment Policy
	Schedule 1: Business Travel Policy
Exhibit C	Service Level Agreement
	Schedule 1: Support Call Process

Exhibit D	Third Party Terms
	Schedule 1: Hyperlinked Terms
	Schedule 2: DocOrigin Terms
	Schedule 3: Koa Hills Terms
	Schedule 4: BMI Terms
Exhibit E	Statement of Work

IN WITNESS WHEREOF, a duly authorized representative of each party has executed this Agreement as of the date(s) set forth below.

Tyler Technologies, Inc.

By: Robert Kennedy-Jensen

Name: Robert Kennedy-Jensen

Title: Group General Counsel

Date: 7/20/22

Address for Notices:
Tyler Technologies, Inc.
One Tyler Drive
Yarmouth, ME 04096
Attention: Chief Legal Officer

City of Opa-Locka, Florida

By: DocuSigned by: Darvin Williams
C48C07C1E8DE492...

Name: Darvin Williams

Title: City Manager

Date: 9/10/2022

Address for Notices:
City of Opa-Locka
3400 NW 135th Street
Opa Locka, FL 33054-4708
Attention: Information Technology Director

Exhibit A
Investment Summary

The following Investment Summary details the software and services to be delivered by us to you under the Agreement. This Investment Summary is effective as of the Effective Date. Capitalized terms not otherwise defined will have the meaning assigned to such terms in the Agreement.

Tyler sales quotation follows this page.

REMAINDER OF PAGE INTENTIONALLY LEFT BLANK

DocuSign Envelope ID: 253EBE9E-E967-4F83-973A-E95AFF34768C

Quoted By:	Tim Vickers
Quote Expiration:	09/30/22
Quote Name:	City of Opa-Locka-ERP-Munis Core Financials, EnerGov and Payroll/HR
Quote Description:	5 Year SaaS Quote Revised Updated 6/16/2022
Saas Term	5.00

Sales Quotation For:
City of Opa-Locka
3400 NW 135th St
Opa Locka FL 33054-4708
Phone: +1 (305) 953-2868

Tyler SaaS and Related Services

Description	Qty	Imp. Hours	Annual Fee
Financial Management			
Accounting	1	96	$ 17,346.00
Accounts Payable	1	24	$ 4,972.00
BMI Asset Track Interface	1	16	$ 1,288.00
Budgeting	1	32	$ 4,972.00
Capital Assets	1	32	$ 4,188.00
Cash Management	1	16	$ 2,859.00
Contract Management	1	16	$ 1,887.00
eProcurement	1	24	$ 2,859.00
Project & Grant Accounting	1	24	$ 3,353.00
Purchasing	1	56	$ 7,225.00
Human Resources Management			
Human Resources & Talent Management	1	88	$ 6,993.00
Payroll w/ESS	1	168	$ 8,401.00
Recruiting	1	16	$ 1,335.00
Risk Management	1	16	$ 1,603.00

Revenue Management			
Accounts Receivable	1	56	$ 3,658.00
Cashiering	1	32	$ 6,288.00
General Billing	1	24	$ 2,432.00
Civic Services			
Business Management Suite	5	112	$ 5,020.00
Civic Access - Business Management	1	24	$ 5,634.00
Civic Access - Community Development	1	24	$ 5,634.00
Community Development Suite	21	192	$ 21,084.00
e-Reviews	1	72	$ 9,188.00
Enterprise Permitting & Licensing Advanced Automation Bundle w Executive Insights	1	8	$ 14,439.00
Enterprise Permitting & Licensing Core Foundation Bundle	1	16	$ 1,912.00
Enterprise Service Requests	1	40	$ 2,888.00
My Civic	1	44	$ 8,000.00
Report Toolkit	1	0	$ 1,885.00
Workforce Mobile	10	16	$ 3,350.00
Content Management			
Content Manager Core	1	32	$ 7,317.00
Data Insights			
Enterprise Analytics and Reporting w Executive Insights	1	64	$ 9,414.00
Additional			
Enterprise Forms Processing (including Common Form Set)	1	0	$ 3,584.00
GIS	26	8	$ 6,214.00
Recurring Services			
Payroll Tax Table Updates	1	0	$ 1,000.00

Sub-Total:		$ 188,222.00
Less Discount:		$ 18,820.00
TOTAL	**1388**	**$ 169,402.00**

Professional Services

Description	Quantity	Unit Price	Ext Discount	Extended Price	Maintenance
50% of Dedicated Project Manager (Monthly)	14	$ 13,550.00	$ 0.00	$ 189,700.00	$ 0.00
Business Management Enterprise Forms Library (6 Enterprise Forms)	1	$ 3,825.00	$ 0.00	$ 3,825.00	$ 0.00
Community Development Enterprise Forms Library (5 Enterprise Forms)	1	$ 3,825.00	$ 0.00	$ 3,825.00	$ 0.00
Enterprise Forms Processing Configuration	1	$ 1,500.00	$ 0.00	$ 1,500.00	$ 0.00
Executive Insights Implementation	1	$ 4,800.00	$ 0.00	$ 4,800.00	$ 0.00
Conversions – See Detailed Breakdown Below				$ 67,980.00	$ 0.00
Onsite Implementation	376	$ 200.00	$0.00	$ 75,200.00	$ 0.00
Remote Implementation	1012	$ 175.00	$0.00	$ 177,100.00	$ 0.00
TOTAL				**$ 523,930.00**	**$ 0.00**

3rd Party Hardware, Software and Services

Description	Qty	Unit Price	Unit Discount	Total Price	Unit Maint/SaaS	Unit Maint/SaaS Discount	Total Maint/SaaS
BMI AssetTrak ARS V3 Fixed Asset Mobile Scanning Device Kit - Enterprise ERP/ATARS	1	$ 2,790.00	$ 0.00	$ 2,790.00	$ 0.00	$ 0.00	$ 0.00
Cash Drawer	1	$ 260.00	$ 0.00	$ 260.00	$ 0.00	$ 0.00	$ 0.00
Hand Held Scanner - Model 1950GSR	1	$ 450.00	$ 0.00	$ 450.00	$ 0.00	$ 0.00	$ 0.00
Hand Held Scanner Stand	1	$ 30.00	$ 0.00	$ 30.00	$ 0.00	$ 0.00	$ 0.00
Koa Hills - Historical Archive Database Module - Financials - Annual Hosting (SaaS)	1	$ 0.00	$ 0.00	$ 0.00	$ 11,285.00	$ 0.00	$ 11,285.00
Koa Hills - Tyler Hosted Data Archive Module - Financials Professional Services	1	$ 11,340.00	$ 0.00	$ 11,340.00	$ 0.00	$ 0.00	$ 0.00
Printer (EPSON TM-H6000V-032) includes Power Supply	1	$ 790.00	$ 0.00	$ 790.00	$ 0.00	$ 0.00	$ 0.00
VPN Device	1	$ 4,000.00	$ 0.00	$ 4,000.00	$ 0.00	$ 0.00	$ 0.00
TOTAL				**$ 19,660.00**			**$ 11,285.00**

Summary	**One Time Fees**	**Recurring Fees**
Total Tyler Software	$ 0.00	$ 0.00
Total Annual	$ 0.00	$ 169,402.00

Total Tyler Services	$ 523,930.00	$ 0.00
Total Third-Party Hardware, Software, Services	$ 19,660.00	$ 11,285.00
Summary Total	**$ 543,590.00**	**$ 180,687.00**
Contract Total	**$ 1,401,885.00**	
Estimated Travel Expenses excl in Contract Total	**$ 21,920.00**	

Unless otherwise indicated in the contract or amendment thereto, pricing for optional items will be held For six (6) months from the Quote date or the Effective Date of the Contract, whichever is later.

Customer Approval: DocuSigned by: Darvin Williams C46C07C1E8DE492... Date: 9/10/2022

Print Name: Darvin Williams P.O.#:

All Primary values quoted in US Dollars

Detailed Breakdown of Conversions (Included in Summary Total)

Description	Qty	Unit Price	Unit Discount	Extended Price
Accounting				
AC - Actuals up to 3 years	1	$ 1,000.00	$ 0.00	$ 1,000.00
AC - Budgets up to 3 years	1	$ 1,000.00	$ 0.00	$ 1,000.00
AC Standard COA	1	$ 2,000.00	$ 0.00	$ 2,000.00
Accounts Payable				
AP - Checks up to 5 years	1	$ 2,200.00	$ 0.00	$ 2,200.00
AP - Invoice up to 5 years	1	$ 2,800.00	$ 0.00	$ 2,800.00
AP Standard Master	1	$ 1,200.00	$ 0.00	$ 1,200.00
Capital Assets				
CA Std Master	1	$ 2,000.00	$ 0.00	$ 2,000.00
Conversions				
Business Management Conversion	1	$ 8,225.00	$ 0.00	$ 8,225.00
Community Development	1	$ 10,575.00	$ 0.00	$ 10,575.00
General Billing				

GB - Bills up to 5 years	1	$ 3,500.00	$ 0.00	$ 3,500.00
GB - Recurring Invoices	1	$ 1,680.00	$ 0.00	$ 1,680.00
GB Std CID	1	$ 1,000.00	$ 0.00	$ 1,000.00
Payroll				
PR Payroll - Accrual Balances	1	$ 1,500.00	$ 0.00	$ 1,500.00
PR Payroll - Accumulators up to 5 years	1	$ 1,400.00	$ 0.00	$ 1,400.00
PR Payroll - Check History up to 5 years	1	$ 1,200.00	$ 0.00	$ 1,200.00
PR Payroll - Deductions	1	$ 1,800.00	$ 0.00	$ 1,800.00
PR Payroll - Earning/Deduction Hist up to 5 years	1	$ 2,500.00	$ 0.00	$ 2,500.00
PR Payroll - Standard	1	$ 2,000.00	$ 0.00	$ 2,000.00
PR Payroll - State Retirement Tables	1	$ 1,400.00	$ 0.00	$ 1,400.00
Professional Services				
MISC On-Site Implementation Hours	24	$ 200.00	$ 0.00	$ 4,800.00
MISC Remote Implementation Hours	48	$ 175.00	$ 0.00	$ 8,400.00
Project & Grant Accounting				
PG - Actuals up to 3 years	1	$ 1,000.00	$ 0.00	$ 1,000.00
PG - Budgets up to 3 years	1	$ 1,000.00	$ 0.00	$ 1,000.00
PGA Standard	1	$ 2,000.00	$ 0.00	$ 2,000.00
Purchasing				
Purchasing - Standard	1	$ 1,800.00	$ 0.00	$ 1,800.00
	TOTAL			**$ 67,980.00**

Optional Tyler SaaS and Related Services

Description	Qty	Imp. Hours	Annual Fee
Financial Management			
BMI CollectIT Interface	1	16	$ 1,068.00
Inventory	1	32	$ 3,472.00
Human Resources Management			

Advanced Scheduling - Up to 150 Employees	1	64	$ 8,333.00
Advanced Scheduling Mobile Access	1	0	$ 2,352.00
Employee Expense Reimbursement	1	24	$ 1,942.00
Time & Attendance - Up to 150 Employees	1	80	$ 7,220.00
Time & Attendance Mobile Access	1	0	$ 3,003.00
Revenue Management			
Citizen Self Service	1	32	$ 3,205.00
Utility Billing CIS including Graphing Agent	1	128	$ 10,441.00
Utility Billing Meter Interface	1	16	$ 2,137.00
Civic Services			
Parks and Recreation	1	64	$ 4,973.00
Enterprise Asset Management			
Asset Maintenance	5	136	$ 4,580.00
Asset Performance	1	80	$ 302.00
Data Insights			
Open Finance	1	0	$ 12,000.00
Recurring Services			
Managed Detection & Response	1	0	$ 15,000.00
TOTAL:		**672**	**$ 83,528.00**

Optional Professional Services

Description	Quantity	Unit Price	Ext. Discount	Extended Price	Maintenance
Install Fee - Managed Detection & Response	1	$ 1,000.00	$ 0.00	$ 1,000.00	$ 0.00
Install Fee - Open Finance	1	$ 3,200.00	$ 0.00	$ 3,200.00	$ 0.00
Source Code Escrow	1	$ 0.00	$ 0.00	$ 0.00	$ 1,500.00
Conversion – See Detailed Breakdown Below				$ 43,000.00	$ 0.00
Onsite Implementation	172	$ 200.00	$ 0.00	$ 34,400.00	$ 0.00
Remote Implementation	500	$ 175.00	$ 0.00	$ 87,500.00	$ 0.00
TOTAL				**$ 169,100.00**	**$ 1,500.00**

Optional 3rd Party Hardware, Software and Services

Description	Qty	Unit Price	Unit Discount	Total Price	Unit Maint/SaaS	Unit Maint/SaaS Discount	Total Maint/SaaS
BMI Bar Code Printer Kit for CollectIT Inventory	1	$ 795.00	$ 0.00	$ 795.00	$ 0.00	$ 0.00	$ 0.00
BMI CollectIT V2 Inventory Mobile Scanning Device Kit	1	$ 3,250.00	$ 0.00	$ 3,250.00	$ 0.00	$ 0.00	$ 0.00
Pattern Stream Automated Document System - Implementation	40	$ 163.00	$ 0.00	$ 6,520.00	$ 0.00	$ 0.00	$ 0.00
Pattern Stream Automated Document System - SaaS	1	$ 0.00	$ 0.00	$ 0.00	$ 14,372.00	$ 0.00	$ 14,372.00
Touchscreen 7: Biometric and Prox Reader	1	$ 2,695.00	$ 0.00	$ 2,695.00	$ 270.00	$ 0.00	$ 270.00
TOTAL				**$ 13,260.00**			**$ 14,642.00**

Optional Conversion Details (Prices Reflected Above)

Description	Quantity	Unit Price	Discount	Total
Contract Management				
Contracts	1	$ 3,000.00	$ 0.00	$ 3,000.00
Enterprise Asset Management				
AM - Closed WO History No Cost Data	1	$ 3,000.00	$ 0.00	$ 3,000.00
AM - Work Order Asset	1	$ 4,000.00	$ 0.00	$ 4,000.00
Inventory				
IN Std Master	1	$ 2,400.00	$ 0.00	$ 2,400.00
Payroll				
HR Human Resources - Certifications	1	$ 1,400.00	$ 0.00	$ 1,400.00
HR Human Resources - Education	1	$ 1,400.00	$ 0.00	$ 1,400.00
HR Human Resources - PM Action History up to 5 years	1	$ 1,400.00	$ 0.00	$ 1,400.00
HR Human Resources - Position Control	1	$ 1,400.00	$ 0.00	$ 1,400.00
HR Human Resources - Recruiting	1	$ 1,400.00	$ 0.00	$ 1,400.00

Utility Billing				
Utility Billing - Backflow	1	$ 1,200.00	$ 0.00	$ 1,200.00
Utility Billing - Balance Forward AR	1	$ 5,600.00	$ 0.00	$ 5,600.00
Utility Billing - Budget Billing	1	$ 3,600.00	$ 0.00	$ 3,600.00
Utility Billing - Consumption History up to 5 years	1	$ 2,000.00	$ 0.00	$ 2,000.00
Utility Billing - Option 2 Assessments	1	$ 1,200.00	$ 0.00	$ 1,200.00
Utility Billing - Service Orders	1	$ 2,300.00	$ 0.00	$ 2,300.00
Utility Billing - Services	1	$ 3,600.00	$ 0.00	$ 3,600.00
Utility Billing - Standard	1	$ 4,100.00	$ 0.00	$ 4,100.00
	TOTAL			**$ 43,000.00**

Tyler Annual Discount Detail (Excludes Optional Products)

Description	Annual Fee	Annual Fee Discount	Annual Fee Net
Financial Management			
Accounting	$ 17,346.00	$ 1,735.00	$ 15,611.00
Accounts Payable	$ 4,972.00	$ 497.00	$ 4,475.00
BMI Asset Track Interface	$ 1,288.00	$ 129.00	$ 1,159.00
Budgeting	$ 4,972.00	$ 497.00	$ 4,475.00
Capital Assets	$ 4,188.00	$ 419.00	$ 3,769.00
Cash Management	$ 2,859.00	$ 286.00	$ 2,573.00
Contract Management	$ 1,887.00	$ 189.00	$ 1,698.00
eProcurement	$ 2,859.00	$ 286.00	$ 2,573.00
Project & Grant Accounting	$ 3,353.00	$ 335.00	$ 3,018.00
Purchasing	$ 7,225.00	$ 723.00	$ 6,502.00
Human Resources Management			
Human Resources & Talent Management	$ 6,993.00	$ 699.00	$ 6,294.00
Payroll w/ESS	$ 8,401.00	$ 840.00	$ 7,561.00
Recruiting	$ 1,335.00	$ 134.00	$ 1,201.00
Risk Management	$ 1,603.00	$ 160.00	$ 1,443.00
Revenue Management			
Accounts Receivable	$ 3,658.00	$ 366.00	$ 3,292.00
Cashiering	$ 6,288.00	$ 629.00	$ 5,659.00

General Billing	$ 2,432.00	$ 243.00	$ 2,189.00
Civic Services			
Business Management Suite	$ 5,020.00	$ 500.00	$ 4,520.00
Civic Access - Business Management	$ 5,634.00	$ 563.00	$ 5,071.00
Civic Access - Community Development	$ 5,634.00	$ 563.00	$ 5,071.00
Community Development Suite	$ 21,084.00	$ 2,100.00	$ 18,984.00
e-Reviews	$ 9,188.00	$ 919.00	$ 8,269.00
Enterprise Permitting & Licensing Advanced Automation Bundle w Executive Insights	$ 14,439.00	$ 1,444.00	$ 12,995.00
Enterprise Permitting & Licensing Core Foundation Bundle	$ 1,912.00	$ 191.00	$ 1,721.00
Enterprise Service Requests	$ 2,888.00	$ 289.00	$ 2,599.00
My Civic	$ 8,000.00	$ 800.00	$ 7,200.00
Report Toolkit	$ 1,885.00	$ 189.00	$ 1,696.00
Workforce Mobile	$ 3,350.00	$ 340.00	$ 3,010.00
Content Management			
Content Manager Core	$ 7,317.00	$ 732.00	$ 6,585.00
Data Insights			
Enterprise Analytics and Reporting w Executive Insights	$ 9,414.00	$ 941.00	$ 8,473.00
Additional			
Enterprise Forms Processing (including Common Form Set)	$ 3,584.00	$ 358.00	$ 3,226.00
GIS	$ 6,214.00	$ 624.00	$ 5,590.00
Recurring Services			
Payroll Tax Table Updates	$ 1,000.00	$ 100.00	$ 900.00
TOTAL	**$ 188,222.00**	**$ 18,820.00**	**$ 169,402.00**

Comments

Tyler's quote contains estimates of the amount of services needed, based on our preliminary understanding of the scope, level of engagement, and timeline as defined in the Statement of Work (SOW) for your project. The actual amount of services required may vary, based on these factors.

Tyler's pricing is based on the scope of proposed products and services contracted from Tyler. Should portions of the scope of products or services be altered by the Client, Tyler reserves the right to adjust prices for the remaining scope accordingly.

Unless otherwise noted, prices submitted in the quote do not include travel expenses incurred in accordance with Tyler's then-current Business Travel Policy.

Tyler's prices do not include applicable local, city or federal sales, use excise, personal property or other similar taxes or duties, which you are responsible for determining and remitting. Installations are completed remotely but can be done onsite upon request at an additional cost.

In the event Client cancels services less than two (2) weeks in advance, Client is liable to Tyler for (i) all non-refundable expenses incurred by Tyler on Client's behalf; and (ii) daily fees associated with the cancelled services if Tyler is unable to re-assign its personnel.

The Implementation Hours included in this quote assume a work split effort of 70% Client and 30% Tyler.

Implementation Hours are scheduled and delivered in four (4) or eight (8) hour increments.

Tyler provides onsite training for a maximum of 12 people per class. In the event that more than 12 users wish to participate in a training class or more than one occurrence of a class is needed, Tyler will either provide additional days at then-current rates for training or Tyler will utilize a Train-the-Trainer approach whereby the client designated attendees of the initial training can thereafter train the remaining users.

As a new Tyler client, you are entitled to a 14-day or a 30-day trial of the Managed Detection and Response cybersecurity service. Please reference https://www.tylertech.com/services/tyler-detect for more information on the service and contact CybersecuritySales@tylertech.com to initiate the trial.
Tyler currently supports the following identity providers (IdP's) for use with Tyler back-office solutions: Microsoft Active Directory through Azure AD, ADFS or Okta AD agent, Google Cloud Identity, Okta, and Identity Automation RapidIdentity. Any requirement by you to use an IdP not supported by Tyler will require additional costs, available upon request.
EnerGov Business Management: Tyler leads and owns the "Assess and Define" and "Configuration" of 1 unique business transactions, 1 template business transactions, 1 geo-rules and 1 automation events. Configuration elements beyond this will be owned by the client.

EnerGov Community Development: Tyler leads and owns the "Assess and Define" and "Configuration" 2 unique business transactions, 2 template business transactions, 1 geo-rules and 1 automation events. Configuration elements beyond this will be owned by the client.

Tyler Content Manager SE includes up to 1TB of storage. Should additional storage be needed it may be purchased as needed at an annual fee of $5,000 per TB.

Personnel Actions Forms Library includes: standard Personnel Action form - New and standard Personnel Action Form - Change.

Payroll library includes: standard PR check, standard direct deposit, standard vendor from payroll check, standard vendor from payroll direct deposit, W2, W2c, ACA 1095B, ACA 1095C and 1099 R.

Your rights, and the rights of any of your end users, to use Tyler's Data & Insights SaaS Services, or certain Tyler solutions which include Tyler's Data & Insights data platform, are subject to the Terms of Services, available at https://www.tylertech.com/terms/socrata-saas-services-terms-of-service. By signing this sales quotation, or accessing, installing, or using any of the Tyler solutions listed at the linked terms, you certify that you have reviewed, understand, and agree to said terms.

Financial library includes: standard A/P check, standard EFT/ACH, standard Purchase order, standard Contract, 1099M, 1099INT, 1099S, 1099NEC and 1099G.

PA760 Rugged Mobile Scanning Device with 2D Imager, Includes: AssetTrak ARS V3 (WiFi/Batch) Capital Asset Software MSD Users License, Enterprise ERP Asset Communicator Desktop Utility, 4G LTE ATT/TMobile, WLAN, Bluetooth 5.0, IP 67 Sealed, 6 ft Drop, GPS, Camera,

BMI Barcode Printer Kit - Includes - GoDEX 700i Thermal Transfer Printer, GoLabel Software with Enterprise ERP Inventory Module Integration, 1 ribbon & 1 roll of 3" by 1" paper labels.

BMI CollectIT V2 Inventory Mobile Scanning Device Kit: PA760 Rugged Mobile Scanning Device with 2D Imager, Includes: CollectIT V2 (Wi-Fi/Batch) Inventory Software MSD Users License, Enterprise ERP Inventory Communicator Desktop Utility, 4G LTE ATT/TMobile, WLAN, Bluetooth 5.0, IP 67 Sealed, 6 ft Drop, GPS, Camera, Andriod 9 OS, Pistol Grip, USB C Cable with power supply, 2.2 GHz Octa-core Processor, 4GB Ram, 64GB Rom with Standard 1 year manufacturer's depot warranty. Includes: 1 year phone support & software upgrades, up to 4 hours of remote install/training via GoTo Meeting. Software support and upgrades renewal for CollectIT Inventory Software Included - $295.00ea will be billed by BMI Systems Group after the first year. NOTE: Requires the Enterprise ERP Web Services Inventory Module Interface.

Business Management Forms Library Includes: 1 Licensing - Business License, 1 Licensing - Business License Renewal, 1 Licensing - Business License Delinquent, 1 Licensing - Profession License, 1 Licensing - Profession License Renewal, 1 Licensing Profession License Delinquent.

Community Development Forms Library Includes: standard Permits - Building, standard Permits - Trade, standard Planning - Certificate, standard Permits - Occupancy/Completion, standard Code - Violation Notice.

General Billing library includes: standard invoice, standard statement, standard general billing receipt and standard miscellaneous receipt.

In the event a self-hosted customer opts to enroll as a beneficiary under Tyler's source code escrow agreement, Tyler will provide the paperwork required for enrollment. That self-hosted customer will be billed, on an annual basis, directly by Tyler's escrow agent, and all such fees must be paid directly to that escrow agent. Rates for subsequent years are subject to change at the discretion of Tyler's escrow agent.

Your acquisition of clocks and/or clock maintenance is subject to the following terms: https://www.tylertech.com/terms/executime-clock-terms.

In the event Client acquires from Tyler any edition of Content Manager software other than Enterprise Edition, the license for Content Manager is restricted to use with Tyler applications only. If Client wishes to use Content Manager software with non-Tyler applications, Client must purchase or upgrade to Content Manager Enterprise Edition.

For the avoidance of doubt, Managed Detection & Response is a subscription service, not SaaS. Notwithstanding the foregoing language, payment of annual subscription fees for Managed Detection & Response commence on the availability of the service. Managed Detection & Response services will renew automatically for additional one (1) year terms, and subsequent subscription fees are due annually in advance on the anniversary of the availability date at our then-current rates. Pricing is based on client's current network size as defined by their entity size. Any material increases of network size may result in additional fees being assessed for the Managed Detection & Response service upon renewal. The quoted Managed Detection & Response amount does not include monitoring of student devices nor analysis of student network traffic. Tyler can quote an additional fee for these services.

Tyler's form library prices are based on the actual form quantities listed, and assume the forms will be provided according to the standard Enterprise ERP form template. Any forms in addition to the quoted amounts and types, including custom forms or forms that otherwise require custom programming, are subject to an additional fee. Please also note that use of the Tyler Forms functionality requires the use of approved printers as well. You may contact Tyler's support team for the most current list of approved printers. Any forms included in this quote are based on the standard form templates provided. Custom forms, additional forms and any custom programming are subject to additional fees not included in this quote. The additional fees would be quoted at the time of request, generally during the implementation of the forms. Please note that the form solution provided requires the use of approved printers. You may contact Tyler's support team for the most current list of approved printers.

Utility Billing CIS includes the Graphing Agent. Utility billing library includes: standard Utility bill, standard UB receipt, standard UB delinquent notice, standard door hanger and standard final utility bill.

DocuSign Envelope ID: 253EBE9E-E967-4F83-973A-E95AFF34768C

Exhibit B
Invoicing and Payment Policy

We will provide you with the software and services set forth in the Investment Summary of the Agreement. Capitalized terms not otherwise defined will have the meaning assigned to such terms in the Agreement.

Invoicing: We will invoice you for the applicable software and services in the Investment Summary as set forth below. Your rights to dispute any invoice are set forth in the Agreement.

1. SaaS Fees. SaaS Fees are invoiced on an annual basis, beginning on the commencement of the initial term as set forth in Section F (1) of this Agreement. Your annual SaaS fees for the initial term are set forth in the Investment Summary. Upon expiration of the initial term, your annual SaaS fees will be at our then-current rates.

2. Other Tyler Software and Services.

   2.1 *VPN Device*: The fee for the VPN device will be invoiced upon installation of the VPN.
   2.2 *Implementation and Other Professional Services (including training)*: Implementation and other professional services (including training) are billed and invoiced as delivered, at the rates set forth in the Investment Summary.
   2.3 *Consulting Services*: If you have purchased any Business Process Consulting services, if they have been quoted as fixed-fee services, they will be invoiced 50% upon your acceptance of the Best Practice Recommendations, by module, and 50% upon your acceptance of custom desktop procedures, by module. If you have purchased any Business Process Consulting services and they are quoted as an estimate, then we will bill you the actual services delivered on a time and materials basis.
   2.4 *Conversions*: Fixed-fee conversions are invoiced 50% upon initial delivery of the converted Data, by conversion option, and 50% upon Client acceptance to load the converted Data into Live/Production environment, by conversion option. Where conversions are quoted as estimated, we will bill you the actual services delivered on a time and materials basis.
   2.5 *Requested Modifications to the Tyler Software*: Requested modifications to the Tyler Software are invoiced 50% upon delivery of specifications and 50% upon delivery of the applicable modification. You must report any failure of the modification to conform to the specifications within thirty (30) days of delivery; otherwise, the modification will be deemed to be in compliance with the specifications after the 30-day window has passed. You may still report Defects to us as set forth in this Agreement.
   2.6 *Other Fixed Price Services*: Other fixed price services are invoiced as delivered, at the rates set forth in the Investment Summary. For the avoidance of doubt, where "Project Planning Services" are provided, payment will be due upon delivery of the Implementation Planning document.
   2.7 *Annual Services*: Unless otherwise indicated in this Exhibit B, fees for annual services are due

annually, in advance, commencing on the availability of the service. Your annual fees for the initial term are set forth in the Investment Summary. Upon expiration of the initial term, your annual fees will be at our then-current rates.

3. Third Party Products.

   3.1 *Third Party Software License Fees*: License fees for Third Party Software, if any, are invoiced when we make it available to you for downloading.
   3.2 *Third Party Software Maintenance*: The first year maintenance for the Third Party Software is invoiced when we make it available to you for downloading.
   3.3 *Third Party Hardware*: Third Party Hardware costs, if any, are invoiced upon delivery.
   3.4 *Third Party Services:* Fees for Third Party Services, if any, are invoiced as delivered, along with applicable expenses, at the rates set forth in the Investment Summary. The foregoing notwithstanding, Koa Hills Professional Services will be invoiced 50% upon commencement of the services and 50% upon completion of the services.
   3.5 *Third Party SaaS:* Third Party SaaS Services fees, if any, are invoiced annually, in advance, commencing with availability of the respective Third Party SaaS Services. Pricing for the first year of Third Party SaaS Services are indicated in the Investment Summary. Pricing for subsequent years will be at the respective third party's then-current rates.

4. Transaction Fees. Unless paid directly by an end user at the time of transaction, per transaction (call, message, etc.) fees are invoiced on a quarterly basis. Fees are indicated in Schedule A and may be increased by Tyler upon notice of no less than thirty (30) days.

5. Expenses. The service rates in the Investment Summary do not include travel expenses. Expenses for Tyler delivered services will be billed as incurred and only in accordance with our then-current Business Travel Policy, plus a 10% travel agency processing fee. Our current Business Travel Policy is attached to this Exhibit B as Schedule 1. Copies of receipts will be provided upon request; we reserve the right to charge you an administrative fee depending on the extent of your requests. Receipts for miscellaneous items less than twenty-five dollars and mileage logs are not available.

Payment. Payment for undisputed invoices is due within forty-five (45) days of the invoice date. We prefer to receive payments electronically. Our electronic payment information is available by contacting AR@tylertech.com.

DocuSign Envelope ID: 253EBE9E-E967-4F83-973A-E95AFF34768C

Exhibit B
Schedule 1
Business Travel Policy

1. Air Travel

A. Reservations & Tickets

The Travel Management Company (TMC) used by Tyler will provide an employee with a direct flight within two hours before or after the requested departure time, assuming that flight does not add more than three hours to the employee's total trip duration and the fare is within $100 (each way) of the lowest logical fare. If a net savings of $200 or more (each way) is possible through a connecting flight that is within two hours before or after the requested departure time and that does not add more than three hours to the employee's total trip duration, the connecting flight should be accepted.

Employees are encouraged to make advanced reservations to take full advantage of discount opportunities. Employees should use all reasonable efforts to make travel arrangements at least two (2) weeks in advance of commitments. A seven (7) day advance booking requirement is mandatory. When booking less than seven (7) days in advance, management approval will be required.

Except in the case of international travel where a segment of continuous air travel is six (6) or more consecutive hours in length, only economy or coach class seating is reimbursable. Employees shall not be reimbursed for "Basic Economy Fares" because these fares are non-refundable and have many restrictions that outweigh the cost-savings.

B. Baggage Fees

Reimbursement of personal baggage charges are based on trip duration as follows:

- Up to five (5) days = one (1) checked bag
- Six (6) or more days = two (2) checked bags

Baggage fees for sports equipment are not reimbursable.

2. Ground Transportation

A. Private Automobile

Mileage Allowance – Business use of an employee's private automobile will be reimbursed at the current IRS allowable rate, plus out of pocket costs for tolls and parking. Mileage will be calculated by using the employee's office as the starting and ending point, in compliance with IRS regulations. Employees who have been designated a home office should calculate miles from their home.

B. Rental Car

Employees are authorized to rent cars only in conjunction with air travel when cost, convenience, and the specific situation reasonably require their use. When renting a car for Tyler business, employees should select a "mid-size" or "intermediate" car. "Full" size cars may be rented when three or more employees are traveling together. Tyler carries leased vehicle coverage for business car rentals; except for employees traveling to Alaska and internationally (excluding Canada), additional insurance on the rental agreement should be declined.

C. Public Transportation

Taxi or airport limousine services may be considered when traveling in and around cities or to and from airports when less expensive means of transportation are unavailable or impractical. The actual fare plus a reasonable tip (15-18%) are reimbursable. In the case of a free hotel shuttle to the airport, tips are included in the per diem rates and will not be reimbursed separately.

D. Parking & Tolls

When parking at the airport, employees must use longer term parking areas that are measured in days as opposed to hours. Park and fly options located near some airports may also be used. For extended trips that would result in excessive parking charges, public transportation to/from the airport should be considered. Tolls will be reimbursed when receipts are presented.

3. Lodging

Tyler's TMC will select hotel chains that are well established, reasonable in price, and conveniently located in relation to the traveler's work assignment. Typical hotel chains include Courtyard, Fairfield Inn, Hampton Inn, and Holiday Inn Express. If the employee has a discount rate with a local hotel, the hotel reservation should note that discount and the employee should confirm the lower rate with the hotel upon arrival. Employee memberships in travel clubs such as AAA should be noted in their travel profiles so that the employee can take advantage of any lower club rates.

"No shows" or cancellation fees are not reimbursable if the employee does not comply with the hotel's cancellation policy.

Tips for maids and other hotel staff are included in the per diem rate and are not reimbursed separately.

Employees are not authorized to reserve non-traditional short-term lodging, such as Airbnb, VRBO, and HomeAway. Employees who elect to make such reservations shall not be reimbursed.

4. Meals and Incidental Expenses

Employee meals and incidental expenses while on travel status within the continental U.S. are in accordance with the federal per diem rates published by the General Services Administration. Incidental expenses include tips to maids, hotel staff, and shuttle drivers and other minor travel expenses. Per diem rates are available at www.gsa.gov/perdiem.

Per diem for Alaska, Hawaii, U.S. protectorates and international destinations are provided separately by the Department of State and will be determined as required.

A. Overnight Travel

For each full day of travel, all three meals are reimbursable. Per diems on the first and last day of a trip are governed as set forth below.

Departure Day

Depart before 12:00 noon	Lunch and dinner
Depart after 12:00 noon	Dinner

Return Day

Return before 12:00 noon	Breakfast
Return between 12:00 noon & 7:00 p.m.	Breakfast and lunch
Return after 7:00 p.m.*	Breakfast, lunch and dinner

*7:00 p.m. is defined as direct travel time and does not include time taken to stop for dinner.

The reimbursement rates for individual meals are calculated as a percentage of the full day per diem as follows:

Breakfast	15%
Lunch	25%
Dinner	60%

B. Same Day Travel

Employees traveling at least 100 miles to a site and returning in the same day are eligible to claim lunch on an expense report. Employees on same day travel status are eligible to claim dinner in the event they return home after 7:00 p.m.*

*7:00 p.m. is defined as direct travel time and does not include time taken to stop for dinner.

5. Internet Access – Hotels and Airports

   Employees who travel may need to access their e-mail at night. Many hotels provide free high speed internet access and Tyler employees are encouraged to use such hotels whenever possible. If an employee's hotel charges for internet access it is reimbursable up to $10.00 per day. Charges for internet access at airports are not reimbursable.

6. International Travel

   All international flights with the exception of flights between the U.S. and Canada should be reserved through TMC using the "lowest practical coach fare" with the exception of flights that are six (6) or more consecutive hours in length. In such event, the next available seating class above coach shall be reimbursed.

   When required to travel internationally for business, employees shall be reimbursed for photo fees, application fees, and execution fees when obtaining a new passport book, but fees related to passport renewals are not reimbursable. Visa application and legal fees, entry taxes and departure taxes are reimbursable.

   The cost of vaccinations that are either required for travel to specific countries or suggested by the U.S. Department of Health & Human Services for travel to specific countries, is reimbursable.

   Section 4, Meals & Incidental Expenses, and Section 2.b., Rental Car, shall apply to this section.

Exhibit C
Service Level Agreement

I. Agreement Overview

This SLA operates in conjunction with, and does not supersede or replace any part of, the Agreement. It outlines the information technology service levels that we will provide to you to ensure the availability of the application services that you have requested us to provide. This SLA does not apply to any Third Party SaaS Services. All other support services are documented in the Support Call Process.

II. Definitions. Except as defined below, all defined terms have the meaning set forth in the Agreement.

Actual Attainment: The percentage of time the Tyler Software is available during a calendar quarter, calculated as follows: (Service Availability – Downtime) ÷ Service Availability.

Client Error Incident: Any service unavailability resulting from your applications, content or equipment, or the acts or omissions of any of your service users or third-party providers over whom we exercise no control.

Downtime: Those minutes during Service Availability, as defined below, when all users cannot launch, login, search or save primary data in the Tyler Software. Downtime does not include those instances in which only a Defect is present.

Emergency Maintenance: (1) maintenance that is required to patch a critical security vulnerability; (2) maintenance that is required to prevent an imminent outage of Service Availability; or (3) maintenance that is mutually agreed upon in writing by Tyler and the Client.

Planned Downtime: Downtime that occurs during a Standard or Emergency Maintenance window.

Service Availability: The total number of minutes in a calendar quarter that the Tyler Software is capable of receiving, processing, and responding to requests, excluding Planned Downtime, Client Error Incidents, denial of service attacks and Force Majeure.

Standard Maintenance: Routine maintenance to the Tyler Software and infrastructure. Standard Maintenance is limited to five (5) hours per week.

III. Service Availability

a. Your Responsibilities

Whenever you experience Downtime, you must make a support call according to the procedures outlined in the Support Call Process. You will receive a support case number.

b. Our Responsibilities

When our support team receives a call from you that Downtime has occurred or is occurring, we will work with you to identify the cause of the Downtime (including whether it may be the result of Planned

Downtime, a Client Error Incident, Denial of Service attack or Force Majeure). We will also work with you to resume normal operations.

c. Client Relief

Our targeted Attainment Goal is 100%. You may be entitled to credits as indicated in the Client Relief Schedule found below. Your relief credit is calculated as a percentage of the SaaS fees paid for the calendar quarter.

In order to receive relief credits, you must submit a request through one of the channels listed in our Support Call Process within fifteen days (15) of the end of the applicable quarter. We will respond to your relief request within thirty (30) day(s) of receipt.

The total credits confirmed by us will be applied to the SaaS Fee for the next billing cycle. Issuing of such credit does not relieve us of our obligations under the Agreement to correct the problem which created the service interruption.

Client Relief Schedule	
Actual Attainment	**Client Relief**
99.99% - 99.50%	Remedial action will be taken
99.49% - 98.50%	2%
98.49% - 97.50%	4%
97.49% - 96.50%	6%
96.49% - 95.50%	8%
Below 95.50%	10%

* Notwithstanding language in the Agreement to the contrary, Recovery Point Objective is one (1) hour.

IV. Maintenance Notifications

We perform Standard Maintenance during limited windows that are historically known to be reliably low-traffic times. If and when maintenance is predicted to occur during periods of higher traffic, we will provide advance notice of those windows and will coordinate to the greatest extent possible with you.

Not all maintenance activities will cause application unavailability. However, if Tyler anticipates that activities during a Standard or Emergency Maintenance window may make the Tyler Software unavailable, we will provide advance notice, as reasonably practicable that the Tyler Software will be unavailable during the maintenance window.

Exhibit C
Schedule 1
Support Call Process

Support Channels

Tyler Technologies, Inc. provides the following channels of software support for authorized users*:

(1) On-line submission (portal) – for less urgent and functionality-based questions, users may create support incidents through the Tyler Customer Portal available at the Tyler Technologies website. A built-in Answer Panel provides users with resolutions to most "how-to" and configuration-based questions through a simplified search interface with machine learning, potentially eliminating the need to submit the support case.
(2) Email – for less urgent situations, users may submit emails directly to the software support group.
(3) Telephone – for urgent or complex questions, users receive toll-free, telephone software support.

** Channel availability may be limited for certain applications.*

Support Resources

A number of additional resources are available to provide a comprehensive and complete support experience:

(1) Tyler Website – www.tylertech.com – for accessing client tools, documentation, and other information including support contact information.
(2) Tyler Search -a knowledge based search engine that lets you search multiple sources simultaneously to find the answers you need, 24x7.
(3) Tyler Community –provides a venue for all Tyler clients with current maintenance agreements to collaborate with one another, share best practices and resources, and access documentation.
(4) Tyler University – online training courses on Tyler products.

Support Availability

Tyler Technologies support is available during the local business hours of 8 AM to 5 PM (Monday – Friday) across four US time zones (Pacific, Mountain, Central and Eastern). Tyler's holiday schedule is outlined below. There will be no support coverage on these days.

New Year's Day	Thanksgiving Day
Memorial Day	Day after Thanksgiving
Independence Day	Christmas Day
Labor Day	

For support teams that provide after-hours service, we will provide you with procedures for contacting support staff after normal business hours for reporting Priority Level 1 Defects only. Upon receipt of

such a Defect notification, we will use commercially reasonable efforts to meet the resolution targets set forth below.

We will also make commercially reasonable efforts to be available for one pre-scheduled Saturday of each month to assist your IT staff with applying patches and release upgrades, as well as consulting with them on server maintenance and configuration of the Tyler Software environment.

Incident Handling

Incident Tracking

Every support incident is logged into Tyler's Customer Relationship Management System and given a unique case number. This system tracks the history of each incident. The case number is used to track and reference open issues when clients contact support. Clients may track incidents, using the case number, through Tyler's Customer Portal or by calling software support directly.

Incident Priority

Each incident is assigned a priority level, which corresponds to the Client's needs. Tyler and the Client will reasonably set the priority of the incident per the chart below. This chart is not intended to address every type of support incident, and certain "characteristics" may or may not apply depending on whether the Tyler software has been deployed on customer infrastructure or the Tyler cloud. The goal is to help guide the Client towards clearly understanding and communicating the importance of the issue and to describe generally expected response and resolution targets in the production environment only.

References to a "confirmed support incident" mean that Tyler and the Client have successfully validated the reported Defect/support incident.

Priority Level	Characteristics of Support Incident	Resolution Targets*
1 Critical	Support incident that causes (a) complete application failure or application unavailability; (b) application failure or unavailability in one or more of the client's remote location; or (c) systemic loss of multiple essential system functions.	Tyler shall provide an initial response to Priority Level 1 incidents within one (1) business hour of receipt of the incident. Once the incident has been confirmed, Tyler shall use commercially reasonable efforts to resolve such support incidents or provide a circumvention procedure within one (1) business day. For non-hosted customers, Tyler's responsibility for lost or corrupted data is limited to assisting the Client in restoring its last available database.

DocuSign Envelope ID: 253EBE9E-E967-4F83-973A-E95AFF34768C

Priority Level	Characteristics of Support Incident	Resolution Targets*
2 High	Support incident that causes (a) repeated, consistent failure of essential functionality affecting more than one user or (b) loss or corruption of data.	Tyler shall provide an initial response to Priority Level 2 incidents within four (4) business hours of receipt of the incident. Once the incident has been confirmed, Tyler shall use commercially reasonable efforts to resolve such support incidents or provide a circumvention procedure within ten (10) business days. For non-hosted customers, Tyler's responsibility for loss or corrupted data is limited to assisting the Client in restoring its last available database.
3 Medium	Priority Level 1 incident with an existing circumvention procedure, or a Priority Level 2 incident that affects only one user or for which there is an existing circumvention procedure.	Tyler shall provide an initial response to Priority Level 3 incidents within one (1) business day of receipt of the incident. Once the incident has been confirmed, Tyler shall use commercially reasonable efforts to resolve such support incidents without the need for a circumvention procedure with the next published maintenance update or service pack, which shall occur at least quarterly. For non-hosted customers, Tyler's responsibility for lost or corrupted data is limited to assisting the Client in restoring its last available database.
4 Non-critical	Support incident that causes failure of non-essential functionality or a cosmetic or other issue that does not qualify as any other Priority Level.	Tyler shall provide an initial response to Priority Level 4 incidents within two (2) business days of receipt of the incident. Once the incident has been confirmed, Tyler shall use commercially reasonable efforts to resolve such support incidents, as well as cosmetic issues, with a future version release.

**Response and Resolution Targets may differ by product or business need*

Incident Escalation

If Tyler is unable to resolve any priority level 1 or 2 defect as listed above or the priority of an issue has elevated since initiation, you may escalate the incident to the appropriate resource, as outlined by each product support team. The corresponding resource will meet with you and any Tyler staff to establish a mutually agreeable plan for addressing the defect.

Remote Support Tool

Some support calls may require further analysis of the Client's database, processes or setup to diagnose a problem or to assist with a question. Tyler will, at its discretion, use an industry-standard remote support tool. Tyler's support team must have the ability to quickly connect to the Client's system and view the site's setup, diagnose problems, or assist with screen navigation. More information about the remote support tool Tyler uses is available upon request.

DocuSign Envelope ID: 253EBE9E-E967-4F83-973A-E95AFF34768C

Exhibit D
Third Party Terms

REMAINDER OF PAGE INTENTIONALLY LEFT BLANK

Exhibit D
Schedule 1
Hyperlinked Terms

Socrata Solution Terms. Your use of certain Tyler solutions includes Tyler's Socrata data platform . Your rights, and the rights of any of your end users, to use Tyler's Socrata SaaS Services Terms of Services, available at https://www.tylertech.com/terms/socrata-saas-services-terms-of-service. By signing a Tyler Agreement or Order Form, or accessing, installing, or using any of the Tyler solutions listed at the linked terms, you certify that you have reviewed, understand and agree to said terms.

ThinPrint Terms. Your use of Tyler Forms software and forms is subject to the End User License Agreement terms for ThinPrint Engine, ThinPrint License Server, and Connected Gateway found here: https://www.thinprint.com/en/legal-notes/eula/. By signing a Tyler Agreement or Order Form, or accessing, installing, or using Tyler Forms software or forms, you agree that you have read, understood, and agree to such terms.

Twilio Acceptable Use Policy. Your use of the Tyler solutions listed below includes functionality provided by a Third Party Developer, Twilio. Your rights, and the rights of any of your end users, to use said functionality are subject to the terms of the Twilio Acceptable Use Policy, available at http://www.twilio.com/legal/aup. By signing a Tyler Agreement or Order Form, or accessing, installing, or using any such Tyler solution, you certify that you have reviewed, understand and agree to said terms. Tyler hereby disclaims any and all liability related to your or your end user's failure to abide by the terms of the Twilio Acceptable Use Policy. Any liability for failure to abide by said terms shall rest solely with the person or entity whose conduct violated said terms.

- Electronic Warrants
- Modria
- Odyssey Notifications Add On (text notifications)
- ReadySub
- Tyler ACFR
- Tyler Notify
- Tyler Jury Manager
- Tyler Supervision
- Virtual Court

Exhibit D
Schedule 2
DocOrigin Terms

REMAINDER OF PAGE INTENTIONALLY LEFT BLANK

ATTENTION: THE SOFTWARE PROVIDED UNDER THIS AGREEMENT IS BEING LICENSED TO YOU BY **ECLIPSE CORPORATION WSL, INC. (Eclipse Corporation)** AND IS NOT BEING SOLD. THIS SOFTWARE IS PROVIDED UNDER THE FOLLOWING AGREEMENT THAT SPECIFIES WHAT YOU MAY DO WITH THE SOFTWARE AND CONTAINS IMPORTANT LIMITATIONS ON REPRESENTATIONS, WARRANTIES, CONDITIONS, REMEDIES, AND LIABILITIES.

DocOrigin

SOFTWARE LICENSE

IMPORTANT-READ CAREFULLY: This End-User License Agreement (**"Agreement"** or **"EULA"**) is a legal agreement between you (either an individual person or a single legal entity, who will be referred to in this EULA as **"You"**) and Eclipse Corporation WSL, Inc. referred to in this EULA as Eclipse Corporation, for the DocOrigin software product that accompanies this EULA, including any associated media, printed materials and electronic documentation (the **"Software"**). The Software also encompasses any software updates, add-on components, web services and/or supplements that may be provided to you or made available to you after the date you obtain the initial copy of the Software to the extent that such items are not accompanied by a separate license agreement or terms of use. If you receive the Software under separate terms from your distributor, those terms will take precedence over any conflicting terms of this EULA.

By installing, copying, downloading, accessing or otherwise using the Software, you agree to be bound by the terms of this EULA. If you do not agree to the terms of this EULA, do not install, access or use the Software; instead, you should remove the Software from all systems and receive a full refund.

IF YOU ARE AN AGENT OR EMPLOYEE OF ANOTHER ENTITY YOU REPRESENT AND WARRANT THAT (I) THE INDIVIDUAL ACCEPTING THIS AGREEMENT IS DULY AUTHORIZED TO ACCEPT THIS AGREEMENT ON SUCH ENTITY'S BEHALF AND TO BIND SUCH ENTITY, AND (II) SUCH ENTITY HAS FULL POWER, CORPORATE OR OTHERWISE, TO ENTER INTO THIS AGREEMENT AND PERFORM ITS OBLIGATIONS HEREUNDER.

1. LICENSE TERMS

1.1 In this Agreement a **"License Key"** means any license key, activation code, or similar installation, access or usage control codes, including serial numbers digitally created and or provided by Eclipse Corporation ,designed to provide unlocked access to the Software and its functionality.

1.2 **Evaluation License.** Subject to all of the terms and conditions of this Agreement, Eclipse Corporation grants You a limited, royalty-free, non-exclusive, non-transferable license to download and install a copy of the Software from www.docorigin.com on a single machine and use it on a royalty-free basis for no more than 120 days from the date of installation (the **"Evaluation Period"**). You may use the Software during the Evaluation Period solely for the purpose of testing and evaluating it to determine if You wish to obtain a commercial, production license for the Software. This evaluation license grant will automatically end on expiry of the Evaluation Period and you acknowledge and agree that Eclipse Corporation will be under no obligation to renew or extend the Evaluation Period. If you wish to continue using the Software You may, on payment of the applicable fees, upgrade to a full license (as further described in section 1.3 below) on the terms of this Agreement and will be issued with a License Key for the same. If you do not wish to continue to license the Software after expiry of the Evaluation Period, then You agree to comply with the termination obligations set out in section [7.3] of this Agreement. For greater certainty, any document generated by you under an evaluation license will have a 'spoiler' or watermark on the output document. Documents generated by DocOrigin software that has a valid license key file also installed will not have the 'spoiler' produced. You are not permitted to remove the watermark or 'spoiler' from documents generated using the software under an evaluation license.

1.3 **Development and Testing Licenses.** Development and testing licenses are available for purchase through authorized distributors and resellers of Eclipse Corporation only. Subject to all of the terms and conditions of this Agreement, Eclipse Corporation grants You a perpetual (subject to termination by Eclipse Corporation due to your breach of the terms of this Agreement), non-exclusive, non-transferable, worldwide

non-sub license able license to download and install a copy of the Software from www.docorigin.com on a single machine and use for development and testing to create collateral deployable to Your production system(s). You are not entitled to use a development and testing license for live production purposes.

1.4 **Production Licenses.** Production licenses are available for purchase through authorized distributors and resellers of Eclipse Corporation only. Subject to all of the terms and conditions of this Agreement, Eclipse Corporation grants You, a perpetual (subject to termination by Eclipse Corporation due to your breach of the terms of this Agreement), non-exclusive, non-transferable, worldwide non-sub license able license to use the Software in accordance with the license type purchased by you as set out on your purchase order as further described below. For greater certainty, unless otherwise agreed in a purchase order concluded with an approved distributor of the Software, and approved by Eclipse Corporation, the default license to the Software is a per-CPU license as described in A. below:

A. **Per-CPU.** The total number of CPUs on a computer used to operate the Software may not exceed the licensed quantity of CPUs. For purposes of this license metric: (a) CPUs may contain more than one processing core, each group of two (2) processing cores is consider one (1) CPU., and any remaining unpaired processing core, will be deemed a CPU. (b) all CPUs on a computer on which the Software is installed shall be deemed to operate the Software unless You configure that computer (using a reliable and verifiable means of hardware or software partitioning) such that the total number of CPUs that actually operate the Software is less than the total number on that computer. Virtual Machines ("VM's") are considered as a server. Installing and configuring the software on multiple VM's requires one license per VM server. An enterprise license is available upon request. Pricing varies based on the size of the company.

B. **Per-Document.** This is defined as a fee per document based on the total number of documents generated annually by merging data with a template created by the Software. The combined data and template produce documents of one or more pages. A document may contain 1 or more pages. For instance, a batch of invoices for 250 customers may contain 1,000 pages, this will be counted as 250 documents which should correspond to 250 invoices.

C. **Per-Surface.** This is defined as a fee per surface based on the total number of surfaces generated annually by merging data with a template created by the Software. The combined data and template produce documents of one or more pages, the pages may be printed one side (one surface) or duplexed (2 surfaces). The documents may be rendered to a computer file (i.e. PDF), each page placed in the file is considered a surface. A document may contain 1 or more surfaces. For instance, a batch of invoices for 250 customers may contain 500 pages duplexed, this will be counted as 1000 surfaces.

1.5 **Disaster Recovery License.** You may request a Disaster Recovery license of the Software for each production license You have purchased as a failover in the event of loss of use of the production server(s). This license is for disaster recovery purposes only and under no circumstance may the disaster recovery license be used for production simultaneously with a production license with which it is paired.

1.6 **Backup Copies.** After installation of the Software pursuant to this EULA, you may store a copy of the installation files for the Software solely for backup or archival purposes. Except as expressly provided in this EULA, you may not otherwise make copies of the Software or the printed materials accompanying the Software.

1.7 **Third-Party Software License Rights.** If a separate license agreement pertaining to an item of third-party software is: delivered to You with the Software, included in the Software download package, or referenced in any material that is provided with the Software, then such separate license agreement shall govern Your use of that item or version of Third-Party Software. Your rights in respect to any third-party software, third-party data, third-party software or other third-party content provided with the Software shall be limited to those rights necessary to operate the Software as permitted by this Agreement. No other rights in the Software or third-party software are granted to You.

2. LICENSE RESTRICTIONS

Any copies of the Software shall include all trademarks, copyright notices, restricted rights legends, proprietary markings and the like exactly as they appear on the copy of the Software originally provided to You. You may not remove or alter any copyright, trademark and/or proprietary notices marked on any part of the Software or related documentation and must reproduce all such notices on all authorized copies of the Software and related documentation. You shall not sublicense, distribute or otherwise make the Software available to any third party (including, without limitation, any contractor, franchisee, agent or dealer) without first obtaining the written agreement of (a) Eclipse Corporation to that use, and (b) such third party to comply with this Agreement. You further agree not to (i) rent, lease, sell, sublicense, assign, or otherwise transfer the Software to anyone else; (ii) directly or indirectly use the Software or any information about the Software in the development of any software that is competitive with the Software, or (iii) use the Software to operate or as a part of a time-sharing service, outsourcing service, service bureau, application service provider or managed service provider offering. You further agree not to reverse engineer, decompile, or disassemble the Software.

3. UPDATES, MAINTENANCE AND SUPPORT

3.1 During the validity period of Your License Key, You will be entitled to download the latest version of the Software from the DocOrigin website www.docorigin.com. Use of any updates provided to You shall be governed by the terms and conditions of this Agreement. Eclipse Corporation reserves the right at any time to not release or to discontinue release of any Software and to alter prices, features, specifications, capabilities, functions, licensing terms, release dates, general availability or other characteristics of the Software.

3.2 On expiry of your maintenance and support contract, you will have the right to continue using the current version(s) of the Software which you downloaded prior to the date of expiry of your License Key. However, you will need to renew maintenance and support in order to receive a new License Key that will unlock the more current version(s) of the Software. For greater certainty, if you attempt to use an expired License Key to download the latest version of the Software, the Software will revert to being a locked, evaluation copy of that version of the Software.

4 INTELLECTUAL PROPERTY RIGHTS.

This EULA does not grant you any rights in connection with any trademarks or service marks of Eclipse Corporation or DocOrigin. All title and intellectual property rights in and to the Software, the accompanying printed materials, and any copies of the Software are owned by Eclipse Corporation or its suppliers. All title and intellectual property rights in and to the content that is not contained in the Software, but may be accessed through use of the Software, is the property of the respective content owners and may be protected by applicable copyright or other intellectual property laws and treaties. This EULA grants you no rights to use such content. If this Software contains documentation that is provided only in electronic form, you may print one copy of such electronic documentation.

5. DISCLAIMER OF WARRANTIES.

TO THE GREATEST EXTENT PERMITTED BY LAW, THE LICENSED SOFTWARE AND TECHNICAL SUPPORT PROVIDED BY ECLIPSE CORPORATION HEREUNDER ARE PROVIDED ON AN "AS IS" BASIS AND THERE ARE NO WARRANTIES, REPRESENTATIONS OR CONDITIONS, EXPRESS OR IMPLIED, WRITTEN OR ORAL, ARISING BY STATUTE, OPERATION OF LAW, COURSE OF DEALING, USAGE OF TRADE OR OTHERWISE, REGARDING THEM OR ANY OTHER PRODUCT OR SERVICE PROVIDED UNDER THIS AGREEMENT OR IN CONNECTION WITH THIS AGREEMENT BY ECLIPSE CORPORATION ECLIPSE CORPORATION DISCLAIM ANY IMPLIED WARRANTIES OR CONDITIONS OF QUALITY, MERCHANTABILITY, MERCHANTABLE QUALITY, DURABILITY, FITNESS FOR A PARTICULAR PURPOSE AND NON-INFRINGEMENT. ECLIPSE CORPORATION DOES NOT REPRESENT OR WARRANT THAT THE SOFTWARE SHALL MEET ANY OR ALL OF YOUR PARTICULAR REQUIREMENTS, THAT THE SOFTWARE WILL OPERATE ERROR-FREE OR UNINTERRUPTED OR THAT ALL ERRORS OR DEFECTS IN THE SOFTWARE CAN BE FOUND OR CORRECTED.

In certain jurisdictions, some or all of the provisions in this Section may not be effective or the applicable law may mandate a more extensive warranty in which case the applicable law will prevail over this Agreement.

6. INDEMNIFICATION & LIMITATIONS OF LIABILITY.

6.1 Eclipse Corporation shall defend and/or settle at its expense, any claims, actions, allegations or proceedings against You to the extent arising out of or relating to misappropriation or infringement by the Software of any third party's proprietary or intellectual property right ("Claims"), and Eclipse Corporation shall pay all damages finally awarded by a court of competent jurisdiction to such third party against You, or any settlement amounts agreed by Eclipse Corporation; subject to the conditions that, You shall notify Eclipse Corporation promptly of any You Claims, permit Eclipse Corporation to control the defense and settlement of such Claims and assist Eclipse Corporation, at Eclipse Corporation's expense, in defending or settling such Claims. Eclipse Corporation shall not be liable for any settlement amounts entered into by You without Eclipse Corporation's prior written approval. If Eclipse Corporation has reason to believe that it would be subject to an injunction or continuing damages based on the Software, then Eclipse Corporation may (and if Eclipse Corporation or any of its customers or third party software suppliers is subject to an injunction or continuing damages based on the Software), then notwithstanding any other provision in this Agreement, Eclipse Corporation shall be entitled to either modify the Software to make it non-infringing and/or remove the misappropriated material, replace the Software or portion thereof with a service or materials that provide substantially the same functionality or information, or, if neither of the foregoing is commercially practicable, require You to cease using the Software and refund to You (a) a pro rata portion of any one (1) time fees (based on a three (3) year, straight-line depreciation schedule from the date of payment), and (b) any fees that have been pre-paid by You but are unused. The foregoing notwithstanding, Eclipse Corporation shall have no liability for a claim of infringement or misappropriation to the extent caused by (i) the combination of the Software with any other service, software, data or products not provided or approved by Eclipse Corporation; or (ii) the use of any material provided by You or any end users, (iii) any breach by You of this Agreement. THE FOREGOING IS ECLIPSE CORPORATION'S SOLE AND EXCLUSIVE LIABILITY, AND YOUR SOLE AND EXCLUSIVE REMEDY FOR ANY INFRINGEMENT OR MISAPPROPRIATION OF ANY THIRD-PARTY INTELLECTUAL PROPERTY RIGHTS.

TO THE GREATEST EXTENT PERMITTED BY APPLICABLE LAW, IN NO EVENT SHALL ECLIPSE CORPORATION BE LIABLE TO YOU OR ANY OTHER PERSON FOR ANY DIRECT, INDIRECT, INCIDENTAL, SPECIAL, PUNITIVE, EXEMPLARY OR CONSEQUENTIAL DAMAGES WHATSOEVER, INCLUDING WITHOUT LIMITATION, LEGAL EXPENSES, LOSS OF BUSINESS, LOSS OF PROFITS, LOSS OF REVENUE, LOST OR DAMAGED DATA, LOSS OF COMPUTER TIME, COST OF SUBSTITUTE GOODS OR SERVICES, OR FAILURE TO REALIZE EXPECTED SAVINGS OR ANY OTHER COMMERCIAL OR ECONOMIC LOSSES ARISING OUT OF OR IN CONNECTION WITH THIS AGREEMENT, EVEN IF ECLIPSE CORPORATION HAS BEEN ADVISED OF THE POSSIBILITY OF SUCH LOSS OR DAMAGES, OR SUCH LOSSES OR DAMAGES ARE FORESEEABLE.

6.2 THE ENTIRE LIABILITY OF ECLIPSE CORPORATION AND YOUR EXCLUSIVE REMEDY WITH RESPECT TO THE SOFTWARE AND TECHNICAL SUPPORT AND ANY OTHER PRODUCTS OR SERVICES SUPPLIED BY ECLIPSE CORPORATION IN CONNECTION WITH THIS AGREEMENT FOR DAMAGES FOR ANY CAUSE AND REGARDLESS OF THE CAUSE OF ACTION, WHETHER IN CONTRACT OR IN TORT, INCLUDING FUNDAMENTAL BREACH OR NEGLIGENCE, WILL BE LIMITED IN THE AGGREGATE TO THE AMOUNTS PAID BY YOU FOR THE SOFTWARE, TECHNICAL SUPPORT OR SERVICES GIVING RISE TO THE CLAIM.

6.3 THE DISCLAIMER OF REPRESENTATIONS, WARRANTIES AND CONDITIONS AND LIMITATION OF LIABILITY CONSTITUTE AN ESSENTIAL PART OF THIS AGREEMENT. YOU ACKNOWLEDGE THAT BUT FOR THE DISCLAIMER OF REPRESENTATIONS, WARRANTIES AND CONDITIONS AND LIMITATION OF LIABILITY, NEITHER ECLIPSE CORPORATION NOR ANY OF ITS LICENSORS OR SUPPLIERS WOULD GRANT THE RIGHTS GRANTED IN THIS AGREEMENT.

7. TERM AND TERMINATION

7.1 The term of this Agreement will begin on download of the Software and, in respect of an Evaluation License, shall continue for the Evaluation Period, and in respect of all other license types defined in Section 1, shall continue for as long as You use the Software, unless earlier terminated sooner under this section 7.

7.2 Eclipse Corporation may terminate this Agreement in the event of any breach by You if such breach has not been cured within thirty (30) days of notice to You. No termination of this Agreement will entitle You to a refund of any amounts paid by You to Eclipse Corporation or its applicable distributor or reseller or affect any obligations You may have to pay any outstanding amounts owing to Eclipse Corporation or its distributor.

7.3 Your rights to use the Software will immediately terminate upon termination or expiration of this Agreement. Within thirty (30) days of termination or expiration of this Agreement, You shall purge all Software and all copies thereof from all computer systems and storage devices on which it was stored, and certify such to Eclipse Corporation

8. GENERAL PROVISIONS

8.1 **No Waiver.** No delay or failure in exercising any right under this Agreement, or any partial or single exercise of any right, will constitute a waiver of that right or any other rights under this Agreement. No consent to a breach of any express or implied term set out in this Agreement constitutes consent to any subsequent breach, whether of the same or any other provision.

8.2 **Severability.** If any provision of this Agreement is, or becomes, unenforceable, it will be severed from this Agreement and the remainder of this Agreement will remain in full force and effect.

8.3 **Assignment.** You may not transfer or assign this Agreement (whether voluntarily, by operation of law, or otherwise) without Eclipse Corporation 's prior written consent. Eclipse Corporation may assign this Agreement at any time without notice. This Agreement is binding upon and will inure to the benefit of both parties, and their respective successors and permitted assigns.

8.4 **Governing Law and Venue if You are located in the USA.** This Agreement shall be governed by the laws of the State of Texas if You are located in the USA. No choice of laws rules of any jurisdiction shall apply to this Agreement. You consent and agree that the courts of the State of Texas shall have jurisdiction over any legal action or proceeding brought by You arising out of or relating to this Agreement, and You consent to the jurisdiction of such courts for any such action or proceeding.

8.5 **Governing Law and Venue if You are not located in the USA.** This Agreement shall be governed by the laws of the Province of Ontario in Canada if You are not located in the USA . No choice of laws rules of any jurisdiction shall apply to this Agreement. You consent and agree that the courts of the Province of Ontario in Canada shall have jurisdiction over any legal action or proceeding brought by You arising out of or relating to this Agreement, and You consent to the jurisdiction of such courts for any such action or proceeding.

8.6 **Entire Agreement.** This Agreement is the entire understanding and agreement between You and Eclipse Corporation with respect to the subject matter hereof, and it supersedes all prior negotiations, commitments and understandings, verbal or written, and purchase order issued by You. This Agreement may be amended or otherwise modified by Eclipse Corporation from time to time and the most recent version of the Agreement will be available on the Eclipse Corporation website www.docorigin.com.

Last Updated: July 22, 2017

Exhibit D
Schedule 3
Koa Hills Terms

Software as a Service AGREEMENT

This Software as a Service Agreement ("Agreement"), made as of the date of last signature below ("Effective Date"), is by and between Koa Hills Consulting, a Nevada LLC ("Supplier"), having an office for notices at P.O Box 58, Reno, NV 89504, and City of Opa Locka ("Client"), located at 3400 NW 135th Street, Opa Locka, FL 33054-4708

INTENDING to be legally bound, Supplier and Client agree that the following terms and conditions will apply to the SaaS Software and services provided under this Agreement, including the attached Statement of Work which is incorporated by reference.

1. DEFINITIONS

Whenever used in this Agreement, any schedules, exhibits, or addenda to this Agreement, the following terms shall have the meanings assigned below. Other capitalized terms used in this Agreement are defined in the context in which they are used.

1.1 ***"Agreement"*** means this Software as a Service Agreement between Supplier and Client, inclusive of all schedules, exhibits, attachments, addenda, and other documents incorporated by reference.

1.2 ***"Authorized User"*** means the employees of the Client.

1.3 ***"Confidential Information"*** means any information that a disclosing party treats in a confidential manner and that is marked "Confidential Information" prior to disclosure to the other party. Confidential Information does not include information which: (a) is public or becomes public through no breach of the confidentiality obligations herein; (b) is disclosed by the party that has received Confidential Information (the "Receiving Party") with the prior written approval of the other party; (c) was known by the Receiving Party at the time of disclosure; (d) was developed independently by the Receiving Party without use of the Confidential Information; (e) becomes known to the Receiving Party from a source other than the disclosing party through lawful means; (f) is disclosed by the disclosing party to others without confidentiality obligations; or (g) is required by law to be disclosed.

1.4 ***"Documentation"*** means, collectively: (a) all materials published or otherwise made available to Client by Supplier that relate to the functional, operational and/or performance capabilities of the Software; (b) all user, operator, system administration, technical, support and other manuals and all other materials published or otherwise made available by Supplier that describe the functional, operational and/or performance capabilities of the Software; (c) any Requests for Information and/or Responses for Proposals (or documents of similar effect) issued by Client, and the responses thereto from Supplier, and any document which purports to update or revise any of the foregoing.

1.5 ***"Enhancements"*** means any improvements, modifications, upgrades, updates, fixes, revisions and/or expansions to the Software that Supplier may develop or acquire and incorporate into its standard version of the Software or which the Supplier has elected to make generally available to its clients who are on a support and/or maintenance plan.

1.6 ***"Intellectual Property Rights"*** includes without limitation all right, title, and interest in and to all (a) Patent and all filed, pending, or potential applications for Patent, including any reissue, reexamination, division, continuation, or continuation-in-part applications throughout the world now or hereafter filed; (b) trade secret rights and equivalent rights arising under the common law, state law, federal law, and laws of foreign countries; (c) copyrights, other literary property or authors rights, whether or not protected by copyright or as a mask work, under common law, state law, federal law, and laws of foreign countries; and (d) proprietary indicia, trademarks, tradenames, symbols, logos, and/or brand names under common law, state law, federal law, and laws of foreign countries.

1.7 ***"Project Manager"*** means the individual who shall serve as each party's point of contact with the other party's personnel as provided in this Agreement. The initial Project Managers and their contact information are set forth in the Notices section below and may be changed by a party at any time upon written notice to the other party.

1.8 ***"SaaS Fees"*** means the fees for the SaaS Services identified in the SOW/Quote.

1.9 ***"SaaS Services"*** means the right to use the Historical Data Archive Software, receive maintenance and support.

1.10 ***"SOW"*** means the standard implementation plan describing what services/data will be provided to implement the Historical Data Archive software.

1.11 ***"Support and Maintenance Services"*** means the technical support, error correction services and support, and Enhancements provided by Supplier to Client to use, maintain and enhance the Software provided by Supplier to Client.

1.12 ***"Third Party"*** means persons, corporations, and entities other than Supplier, Client or any of their employees, contractors, or agents.

1.13 ***"Third Party Software"*** means any Software provided by Supplier to Client that Supplier licensed from a Third Party and is to be delivered by Supplier to Client in connection with the Software.

1.14 **"Version"** means one of a sequence of copies of a Software program, each incorporating new modifications commonly identified by a number in the form X.Y, where X is the Version number and Y is the release number. An increment in X (with Y reset to zero) signifies a substantial increase in the function of the program or a partial or total re-implementation, whereas Y increases each time the program is changed in any way and re-released.

1.15 **We, Us, Our** means Koa Hills Consulting LLC

1.16 **You** and similar terms means the Client

2. Rights Granted and Restrictions

2.1 Koa Hills Consulting LLC grants to you a non-exclusive non-assignable limited right to use to use the Historical Archive Database SaaS Services for your internal business purposes only as of the effective date. Your rights to use the Historical Archive database software are perpetual but may be revoked if you fail to comply with any material terms of this agreement and have not cured such material failure within 30 days.

2.2 SaaS fees – You agree to pay us SaaS Fees. If the annual fee is not paid when due your SaaS Service to use the software will be suspended unless and until payment is made in full.

2.3 The documentation is licensed to you and may be used and copied by your employees for internal, non-commercial reference purposes only.

2.4 Client understands and agrees that, except as permitted by this Agreement, it may not: (a) sell, assign, lease, license, sub-license or otherwise distribute the Software or Documentation, (b) use the Software for the purposes of providing commercial data processing services to Third Parties, such as commercial use in a service bureau, timesharing, remote batch, or other similar commercial operation; (c) create or attempt to create, or permit others to create or attempt to create, by reverse engineering or any other process, the Software.

2.5 We reserve all rights not expressly granted to you in this agreement. The Historical Archive Database and documentation are protected by copyright and other intellectual property laws and treaties. We own the title, copyright and other intellectual property rights in the Historical Archive Database Software and the documentation.

3. Support and Maintenance Services

3.1 The Client shall receive the general help desk Support and Maintenance Services offered by Supplier.

3.2 The Project Managers, or such persons as otherwise designated by Client and Supplier, shall serve as said parties' contacts for all communications relating to Support and Maintenance Services. Each party may change its own contact person by written notice to the other party.
3.3 Except as otherwise provided in a signed addendum to this Agreement, nothing herein shall obligate Supplier to enhance the Software in any respect or on any particular date. The decision as to whether and/or when, to enhance the Software will be within Supplier's discretion.

4. Professional Services

4.1 We will provide the implementation services outlined in the Statement of Work (SOW)
4.2 You agree to pay the professional services fees for our services in the amounts set forth in the Tyler Technologies, Inc. agreement Investment Summary and as indicated in Exhibit B of such agreement. The Client acknowledges that the fees stated for such services are good faith estimates of the time and materials required for your implementation.
4.3 Additional Professional Services. If additional work beyond the scope of contracted services is required or if the Client requests additional work outside the original SOW, then a change order will be produced with the hours required/requested at the current hourly rate.
4.4 Access and Requirements. At no cost to Koa Hills Consulting LLC, Client agrees to provide us with full and free access to your personnel and equipment and network as may be reasonably necessary to provide implementation and installation services, subject to reasonable security protocols.
4.5 Client Assistance. You acknowledge that the implementation of the Historical Archive Database software is a cooperative process requiring time and effort from your personnel. We will not be liable for failure to meet deadlines or milestones when such failure is due to Force Majeure or by failure of your personnel to provide cooperation and assistance.

5. Fees, Invoicing, Payment, and Invoice Disputes

5.1 Client agrees to pay all undisputed amounts due to Supplier in accordance with the Tyler Technologies SaaS Agreement to which these terms are an exhibit. Such fees will be payable by client and within thirty (30) calendar days of Client's receipt of Supplier's invoice or the invoice due date, whichever is later.

5.2 If an invoiced amount is disputed in good faith by the Client, then the Client shall work with the Supplier to resolve the dispute. Client may suspend the payment of all disputed amounts until the dispute is resolved. Client has 30 days from the invoice date to dispute an invoice in writing to the Supplier.

6. Term and Termination

6.1 Term. This Agreement shall be effective as of the Effective Date. The initial term of the SaaS Services is 5 years beginning with the availability of the SaaS Services and ends five (5) years later, unless earlier terminated as set forth below. Upon expiration of the initial term, and upon mutual agreement of both parties, this Agreement may renew for up to five (5) additional five (5) year renewal terms, each at our then-current SaaS Fees unless terminated in writing by either party at least sixty (60) days prior to the end of the initial term or the end of the then-current renewal term. We will provide you notice of any increase in SaaS Fees no less than ninety (90) days prior to the commencement of the renewal term. You will then have until sixty (60) days prior to the termination of the current term to agree to a renewal of this Agreement at the prices contained in our notice, or as we may otherwise agree. Your right to access or use the Historical Data Archive Software and the SaaS Services will terminate at the end of this Agreement.

6.2 This Agreement may be terminated as set forth below. In the event of termination, you will pay us for all undisputed fees and expenses related to the software, products, and/or services you have received, or we have incurred or delivered, prior to the effective date of termination. Disputed fees and expenses in all terminations other than your termination for cause must have been submitted as invoice disputes

6.3 Either party may terminate this Agreement if the other party intentionally and materially breaches this Agreement and then fails to correct such breach within thirty (30) days. Written notice of the breach will be provided to the offending party as soon as the breach is identified. In the event of an uncorrected breach this Agreement can be terminated immediately.

6.4 Failure to Pay SaaS Fees - You acknowledge that continued access to the SaaS Services is contingent upon your timely payment of SaaS Fees. If you fail to timely pay the SaaS Fees, we may discontinue the SaaS Services and deny your access to the Historical Data Archive Software. We may also terminate this Agreement if you don't cure such failure to pay within forty-five (45) days of receiving written notice of our intent to terminate.

6.5 Fees for Termination without Cause - Client hereby acknowledges that we have invested time and personnel in the development of the software being licensed to the Client. Therefore, termination of this Agreement without cause during the initial term will result in a financial hardship to us. If you terminate this Agreement during the initial term for any reason other than cause, Force Majeure, or lack of appropriations, or if we terminate this Agreement during the initial term for your failure to pay SaaS Fees, you shall pay us the following early termination fees:

a. if you terminate during the first year of the initial term, 100% of the SaaS Fees through the date of termination plus 25% of the SaaS Fees then due for the remainder of the initial term;

b. if you terminate during the second year of the initial term, 100% of the SaaS Fees through the date of termination plus 15% of the SaaS Fees then due for the remainder of the initial term; and

c. if you terminate after the second year of the initial term, 100% of the SaaS Fees through the date of termination plus 10% of the SaaS Fees then due for the remainder of the initial term.

6.6 The following Sections shall survive the expiration or termination of this Agreement: Section 6, 7, 9, 10, 11, 12, 13, 15 and 16. Any terms of this Agreement which by their nature extend beyond its termination remain in effect until fulfilled and apply to respective successors and assignees.

7. Warranty, Limitation of Liability, and Indemnification

7.1 Supplier represents and warrants that the Software provided under this Agreement shall function substantially in accordance with the Documentation and produce results substantially in accordance with the Documentation. Supplier's obligations for breach of the Software Warranty shall be limited to using its best efforts, at its own expense, to correct or replace that portion of the Software which fails to conform to such warranty, and, if Supplier is unable to correct any breach in the Software Warranty by the date which is sixty (60) days after Client provides notice of such breach, Client may, in its sole discretion, either extend the time for Supplier to cure the breach or terminate this Agreement. This will be your sole remedy should we be unable to cure the defect.

7.2 THE WARRANTIES SET FORTH ABOVE ARE IN LIEU OF ALL OTHER WARRANTIES, EXPRESS OR IMPLIED, WITH REGARD TO THE SOFTWARE PURSUANT TO THIS AGREEMENT, INCLUDING, BUT NOT LIMITED TO, ANY IMPLIED WARRANTIES OF MERCHANTABILITY AND FITNESS FOR A PARTICULAR PURPOSE.

7.3 If the Software and/or Documentation, or any part thereof, is the subject of any claim for infringement of any patent, copyright, trademark, or other proprietary right or violates any trade secret or other contractual right of any Third Party, or if it is adjudicated by a court of competent jurisdiction that the Software and/or Documentation, or any part thereof, infringes any patent, copyright, trademark, or other proprietary right or violates any trade secret or other contractual right of any Third Party, and Client's use of the Software and/or Documentation, or any part of it, is enjoined or interfered with in any manner, Supplier shall, at its sole expense and within sixty (60) calendar days of such injunction or interference, either: (a) procure for Client the right to continue using the Software and/or Documentation free of any liability for infringement or violation; (b) replace or modify the Software and/or Documentation, or parts thereof, with non-infringing Software and/or Documentation of equivalent or better functionality.

7.4 Supplier shall have no obligation to indemnify Client for a claim if: (a) Client uses the Software in a manner contrary to the provisions of this Agreement and such misuse is the cause of the infringement or misappropriation; or (b) Client's use of the Software in combination with any product, software or system not authorized, approved or recommended by Supplier and such combination is the cause of the infringement or misappropriation; or (c) altering or modifying the Historical Archive Database software including any modification by a third parties at your direction or otherwise permitted by you; or (d) willful infringement, including use of the software after we notify you to discontinue use due to such a claim.

7.5 Supplier shall defend, indemnify and hold the Client, its officers, employees, and agents harmless from and against any and all liability, loss, expense (including reasonable attorneys' fees), or claims for injury or damages arising out of the performance of this Agreement but only in proportion to and to the extent such liability, loss, expense, attorneys' fees, or claims for injury or damages caused by or resulting from the negligent or intentional acts or omissions of the Supplier, its officers, employees, or agents.
7.6 Client shall defend, indemnify and hold the Supplier, its officers, employees, and agents harmless from and against any and all liability, loss, expense (including reasonable attorneys' fees), or claims for injury or damages arising out of the performance of this Agreement but only in proportion to and to the extent such liability, loss, expense, attorneys' fees, or claims for injury or damages caused by or resulting from the negligent or intentional acts or omissions of the Client, its officers, employees, or agents.
7.7 The indemnifying party shall keep the other reasonably apprised of the continuing status of the claim, including any proceedings resulting from it, and shall permit the other party, at its expense, to participate in the defense or settlement of the claim provided that the indemnifying party has the sole right to control the defense.

7.8 LIMITATION OF LIABILITY - EXCEPT AS OTHERWISE EXPRESSLY SET FORTH IN THIS AGREEMENT, OUR LIABILITY FOR DAMAGES ARISING OUT OF THIS AGREEMENT, WHETHER BASED ON A THEORY OF CONTRACT OR TORT, INCLUDING NEGLIGENCE AND STRICT LIABILITY, SHALL BE LIMITED TO YOUR ACTUAL DIRECT DAMAGES, NOT TO EXCEED; (A) PRIOR TO FORMAL TRANSITION TO MAINTENANCE AND SUPPORT TWO TIMES (2X) THE TOTAL ONE TIME FEES SET FORTH IN THE TYLER TECHNOLOGIES, INC. SAAS AGREEMENT. ; OR (B) AFTER FORMAL TRANSITION TO MAINTENANCE AND SUPPORT, TWO TIMES (2X) THE THEN CURRENT ANNUAL MAINTENANCE AND SUPPORT FEE. THE PARTIES ACKNOWLEDGE AND AGREE THAT THE PRICES SET FORTH IN THIS AGREEMENT ARE SET IN RELIANCE UPON THIS LIMITIATION OF LIABILITY AND TO THE MAXIMUM EXTENT ALLOWED UNDER APPLICABLE LAW, THE EXCLUSION OF CERTAIN DAMAGES, AND EACH SHALL APPLY REGARDLESS OF THE FAILURE OF AN ESSENTIAL PURPOSE OF ANY REMEDY. THE FOREGOING LIMITIATION OF LIABILITY SHALL NOT APPLY TO CLAIMS THAT ARE SUBJECT TO SECTION 8.3 THROUGH 8.6.

7.9 EXCLUSION OF CERTAIN DAMAGES – TO THE MAXIMUM EXTENT PERMITTED BY APPLICABLE LAW, IN NO EVENT SHALL WE BE LIABLE OR ANY SPECIAL, INCIDENTAL, PUNITIVE, INDIRECT OR CONSEQUENTIAL DAMAGES WHATSOEVER, EVEN IF WE HAVE BEEN ADVISED OF THE POSSIBILITY OF SUCH DAMAGES.

8. Insurance

During the course of performing services under this agreement, Koa Hills Consulting LLC agrees to maintain the following levels of insurance: (a) Commercial General Liability of at least $1,000,000; (b) Automobile Liability of at least $1,000,000; (c) Professional Liability of at least $1,000,000; (d) Workers Compensation of at least $1,000,000; (e) Cyber Insurance of at least $1,000,000. We will provide a certificate of insurance upon request.

9. Confidentiality

9.1 Each party acknowledges that certain information that it shall acquire from the other is of a special and unique character and constitutes Confidential Information.
9.2 The Receiving Party agrees to exercise the same degree of care and protection with respect to the Confidential Information that it exercises with respect to its own similar Confidential Information and not to directly or indirectly provide, disclose, copy, distribute, republish, or otherwise allow any Third Party to have access to any Confidential Information without prior written permission from the disclosing party. However: (a) either party may disclose Confidential Information to its employees and authorized agents who have a need to know; (b) either party may disclose Confidential Information if so required to perform any obligations under this Agreement; and (c) either party may disclose Confidential Information if so required by law (including court order or subpoena).

10. Title/Ownership

10.1 Client acknowledges that Supplier holds all right, title and interest in any copyrights, patents, trade secrets and any other Intellectual Property Rights in the Software. Nothing in this Agreement shall be construed to convey any title or ownership rights in the Software to the Client.
10.2 All data created and/or processed by the Software is and shall remain the property of the Client and shall

in no way become attached to the Software, nor shall Supplier have any rights in or to the data of Client.
10.3 Any documents, forms, compilations and/or spreadsheets that are generated from the utilization of the functionality of the Software are not the intellectual property of the Supplier and can be used by Client in its ordinary course of business, including but not limited to Client sharing such documents with Third Parties.

11. Dispute Resolution

11.1 Designated Supplier and Client Project Managers shall meet as often as is reasonably required to review the performance of the parties under this Agreement and to resolve any disputes.

11.2 If a dispute arises and these representatives are unable to resolve the dispute within fifteen (15) business days, then the dispute will be escalated to an executive level representative of each party with the authority to resolve such matters. Supplier and Client executives must meet to resolve any disputes. To the extent provided by law, all meetings and discussions between executive level representatives will be deemed confidential settlement discussions not subject to disclosure under Federal Rule of Evidence 408 or any similar state rule. If we fail to resolve the dispute, then the parties shall participate in non-binding mediation to resolve the dispute. If the dispute remains unresolved after mediation, then either party may assert our respective rights and remedies in a court of competent jurisdiction. Nothing in this section shall prevent either party from seeking necessary injunctive relief during the dispute resolution procedures.

12. Taxes

All taxes required for the Software purchase by Client under this Agreement will be the responsibility of Client. Client is responsible for remitting all taxes to the taxing authority.

13. Joint Drafting

SUPPLIER AND CLIENT ACKNOWLEDGE THAT EACH HAS BEEN ADVISED BY THEIR RESPECTIVE ATTORNEYS REGARDING THE TERMS, EFFECTS AND CONSEQUENCES OF THE AGREEMENT. ACCORDINGLY, SUPPLIER AND CLIENT AGREE THAT THIS AGREEMENT SHALL NOT BE CONSTRUED AS HAVING BEEN DRAFTED SOLELY BY OR ON BEHALF OF EITHER PARTY.

14. Assignment

This agreement shall be binding on and shall be for the benefit of either your or our successor(s) or permitted assign(s). Neither party may assign this Agreement without prior written consent of the other party; provided, however your consent is not required for assignment by us because of a corporate reorganization, merger, acquisition, or purchase of substantially all of our assets.

15. Governing Law

This Agreement shall be governed by, and construed in accordance with, the laws of the State of Nevada, excluding its conflicts of laws provisions. Any dispute, claims, demands or actions arising out of or in relation to this Agreement, or the interpretation, making, performance, breach, or termination thereof shall be brought in and resolved by the Superior Court of the County of Washoe in Reno, Nevada.

16. No Intended Third Party Beneficiaries

This agreement is entered into solely for the benefit of Supplier and Client. No third party will be deemed a beneficiary of this agreement, and no third party will have the right to make any claim or assert any right under this agreement.

17. Client Name

Client agrees that Supplier can identify Client by name in client lists, and with prior written consent marketing presentations and promotional materials.

18. Force Majeure

Neither party shall be liable to the other for failure or delay of performance hereunder due to earthquake, flood, storm, fire, epidemics, acts of government, governmental agencies or officers, war, insurrection, riots, civil disturbances, or any other cause beyond the reasonable control of the non-performing party. The non-performing party will promptly notify the other party in writing of an event of force majeure, the expected duration of the events, and its anticipated effect on the ability of the party to perform its obligations and make reasonable effort to remedy the event of force majeure in a timely fashion.

19. Notices

19.1 All notices, requests, consents, approvals, or authorizations in connection with this Agreement (collectively, "Notices") must be given in writing, sent by personal delivery, messenger, overnight delivery service, electronic mail with delivery acknowledgement or the United States mail, postage prepaid, certified, or registered, return receipt requested, and addressed as follows:

If to Supplier:
Koa Hills Consulting LLC
P.O Box 58, Reno, NV 89504
Attention: John Schwartz

If to Client:
City of Opa Locka
3400 NW 135th Street, Opa Locka, FL 33054-4708
Attention: Information Technology Director

19.2 All Notices sent in accordance with the foregoing shall be deemed received by the intended recipient: (a) upon personal delivery; or (b) One (1) business day following deposit with an overnight courier service submitted in time for next day delivery or (c) by email acknowledgement.

20. Severability

20.1 The terms of this Agreement are severable. If any provision of this Agreement, or any portion thereof, is declared by a court of competent jurisdiction to be illegal, void, invalid or unenforceable, that provision of the Agreement will be enforced to the maximum extent permissible so as to affect the intent of the parties, and the remainder of the Agreement will continue in full force and effect for the same purpose.

20.2 In the event that any provision shall be held to be illegal, void, invalid or unenforceable, that provision shall in good faith be renegotiated to reflect as closely as possible the intent of the original provisions of this Agreement in a manner that is valid and enforceable.

21. Waiver

21.1 The waiver of any performance required under this Agreement or of any breach of any provision of this Agreement shall not operate or be construed as a waiver of any subsequent failure to perform or breach of the same or any other provision of this Agreement.

21.2 The delay or omission by either party to exercise any right or remedy under this Agreement shall not be construed to be either acquiescence or the waiver of the ability to exercise any right or remedy in the future.

22. Counterparts

This Agreement may be executed in multiple counterparts, each of which when so executed and delivered shall be deemed an original, and such counterparts together shall constitute one and the same instrument. Each party shall receive a duplicate original of the counterpart copy or copies executed by it. For purposes hereof, a facsimile or emailed copy of this Agreement, including the signature pages hereto, shall be deemed

an original, and each party agrees that it will not contest the validity of the execution of this Agreement solely based on any signature being a facsimile or electronic transmission. If this Agreement is executed in counterparts, no signatory hereto shall be bound by this Agreement until all parties have executed a counterpart of this Agreement. Each party represents to the other that the signatory set forth below is duly authorized to bind that party to this agreement.

23. Headings

The section headings in this Agreement are inserted for convenience only, are not substantive, and shall not be interpreted to define, describe, modify, or otherwise limit the interpretation or scope of the provision under the section heading or of the Agreement as a whole.

24. Entire Agreement

This Agreement, together with all the incorporated exhibits, schedules, attachments, and proposals and addenda, constitutes the entire, final, and exclusive Agreement between the parties with respect to the subject matter herein and supersedes all prior and contemporaneous agreements, understandings, negotiations, and discussions, whether oral or written, between the parties. The parties expressly disclaim the right to claim the enforceability or effectiveness of any oral modifications to this Agreement or any amendments based on course of dealing, waiver, release, estoppel, or other similar legal theory. Any amendment or modification to this Agreement shall be effective only if in writing and signed by duly authorized representatives of both Supplier and Client.

The authorized signatory from each party has read the Agreement, understands it, and is authorized to bind his/her organization. This Agreement becomes binding when signed by the authorized signatory of both parties.

IN WITNESS WHEREOF, the parties have entered into this Agreement as of the Effective Date.

Koa Hills Consulting LLC

By: John Schwartz

Print Name: John Schwartz

Title: COO

Date: 7/20/2022

City of Opa Locka, Florida

DocuSigned by:

By: Darvin Williams
C4BC07C1E8DE49Z...

Print Name: Darvin Williams

Title: City Manager

Date: 9/10/2022

DocuSign Envelope ID: 253EBE9E-E967-4F83-973A-E95AFF34768C

Historical Database Archive Scope of Work

Introduction

Koa Hills Consulting (KHC) will deliver a web-based data archival system to maintain access to historical data in addition to the data that is converted directly to Munis. This includes information that is not typically converted into Munis, such as closed purchase orders or inactive vendors, as well as additional years of historical data that the client needs. The build out of the historical data archive uses the same Munis data conversion templates and mappings created during the implementation process. Users will be able to access an intuitive web-based application which looks and feels like the Munis Central applications in order to retrieve historical information.

The historical information includes the following areas of data:

- General Ledger
- Projects
- Budgets
- Vendors
- Accounts Payable Checks
- Accounts Payable Invoices
- Purchase Orders
- Contracts
- Employee Demographics
- Employee Job/Salary
- Employee Deductions
- Payroll Check History

Application Features

The historical data archive is a web-based module which provides menu driven access to a series of screens and reports designed for user access. The web front end is very similar in nature to the inquiry options within Munis to provide users with a familiar and intuitive interface. The screens provide the ability to perform advanced searches and return data which may then be viewed and exported to Excel, if needed.

The following screens will be available within the historical archive database. Information on these screens will correlate with the Munis screens whenever possible; however, certain pieces of information which would become stale over time are omitted. All data available through the Munis Conversion programs have the opportunity for inclusion in the data archive.

Screen	Content
Accounts, Project Central	All related financial activity for a given Munis GL Organization, Object and Project including budget, actual and encumbrance data.
Vendor Central	All related financial activity for a vendor, and drill down into the detail in: Checks, Invoices, Purchase Order, Contracts.
Purchasing Central	Purchase order and line item detail with associated AP Invoices.
Contracts Central	Contract information with associated AP Invoices and Purchase Orders.
Invoice Central	AP Invoice information with associated purchase orders and payment details.
Check History	Employee payroll check history

Employee Job/Salary	Employee job and salary history
Employee Deductions	Employee payroll deductions
Employee Master	Employee tracking and general information

Deliverables

The following deliverables will be provided with the solution:

- Web based application to access historical data
- Training to use the historical data application
- KHC will assist client in converting and populating data input spreadsheets to match mapping requirements
- Data conversion templates for mapping
    - KHC will use the same mapping spreadsheets as the Munis Data Conversion Team
- Historical data will be converted into the archival database using the Munis data structure

Client Responsibilities

- Client shall provide access to fulfill the necessary requirements to historical data files, data mapping expertise and any other necessary information to facilitate the archival process
- Client shall furnish legacy system documentation for data mapping, as needed
- Client shall furnish the required hardware to run the archival system unless the client chooses the SaaS option
- Client shall provide necessary access to the client internal network for installation and configuration if needed
- Client shall provide GL Account Crosswalk mapping for any legacy accounts which are desired to maintain for all years archived with the new updated Munis format
- Client shall assist with data validation and testing by running reports comparing totals and details on legacy data between systems

Hardware Requirements

If not using the SaaS solution, the client will supply the stand-alone server with a recent version of Windows Server Operating System, SQL server, SSRS, and the Management Studio package. Though the server is a read only, Koa Hills recommends a duplicate hard drive backup to cover disasters and possible drive failures. Koa Hills will create a schema which closely matches that of Munis data migration for each sub-system.

Assumptions

- The server will be designed for administrative access only and there will be no layered user security.
- Data is consistent for all years. If the data has changed (ex. COA length changed at some point in the past and is different from the current data structure in Munis), then additional professional services may be required.
- Legacy system data will be converted from a single source. If there are multiple legacy systems, then additional professional services may be required.
- All work will be performed remotely. Travel costs are not included and will be billed as incurred if travel is required.

Exhibit D
Schedule 4
BMI Terms

End-User License Agreement (EULA) for AssetTrak ARS Desktop Computer

IMPORTANT-READ CAREFULLY: This End-User License Agreement ("EULA") is a legal agreement between you (either an individual or a single entity) and the Manufacturer (BMI Systems Group) of the application software for the desktop version of "AssetTrak ARS.

Software Product License

The "AssetTrak ARS Software Product" is protected by copyright laws and international copyright treaties, as well as other intellectual property laws and treaties. The "AssetTrak ARS Software Product" is licensed, not sold.

1. GRANT OF LICENSE. This EULA grants you the following rights:

* Software. You may install and use one copy of the "AssetTrak ARS Software Product" on (1) computer per license.

DESCRIPTION OF OTHER RIGHTS AND LIMITATIONS

*Limitations of Reverse Engineering, Decompilation and Disassembly. You may not reverse engineer, decompile, or disassemble the "AssetTrak ARS Software Product", except and only to the extent that such activity is expressly permitted by applicable law notwithstanding this limitation.

*Separation of Components. The "AssetTrak ARS Software Product" is licensed as a single product. Its component parts may not be separated for use on more than one computer.

*Single Computer. "AssetTrak ARS Software Product" is licensed with a Computer as a single product.

*Software Transfer. You may permanently transfer all of your rights under this EULA only as part of a transfer to a new computer if you transfer all of the "AssetTrak ARS Software Product" (including all component parts, the media and printed materials if applicable, the Certificate(s) or Authenticity), and the recipient agrees to the terms of this EULA. A second copy for backup only is permitted. Only (1) copy can be used at a time.

*Termination. Without prejudice to any other rights BMI System Group may terminate this EULA if you fail to comply with the terms and conditions of this EULA. In such event, you must destroy all copies of the "AssetTrak ARS Software Product" and all of its component parts.

2. COPYRIGHT. All title and copyrights in and to the "AssetTrak ARS Software Product" (including but not limited to any images, photographs, animations, video, audio, music, text, and "applets" incorporated into the" AssetTrak ARS Software Product" the accompanying printed materials, and any copies of the" AssetTrak ARS Software Product", are owned by BMI Systems Group or its suppliers. You may not copy the printed materials accompanying the "AssetTrak ARS Software Product". All rights not specifically granted under this EULA are reserved by BMI Systems Group.

4. PRODUCT SUPPORT. Product Support for the "AssetTrak ARS Software Product" is provided by BMI Systems Group or its subsidiaries. For product support, please refer to BMI's support number provided in the documentation for the software. Should you have any questions concerning this EULA, or if you desire to contact BMI Systems Group for any other reason, please refer to the address provided in the documentation for the "AssetTrak ARS Software Product".

5. U.S. GOVERNMENT RESTRICTED RIGHTS. The "AssetTrak ARS Software Product" and documentation are provided with RESTRICTED RIGHTS. Use, duplication, or disclosure by the Government is subject to restrictions as set forth in subparagraph (c)(1)(ii) of the Rights in Technical Data and Computer Software clause at DFARS 252.277-7013 or sub-paragraphs (c)(1) and (2) of the Commercial Computer Software-Restricted Rights at 48 CFR 52.227-19, as applicable. Manufacturer is BMI Systems Group, P.O. Box 6280, Chandler, AZ 85246-6280

DocuSign Envelope ID: 253EBE9E-E967-4F83-973A-E95AFF34768C

Exhibit E
Statement of Work

Statement of Work follows this page.

DocuSign Envelope ID: 253EBE9E-E967-4F83-973A-E95AFF34768C

City of Opa-Locka, FL

SOW from Tyler Technologies, Inc.

4/28/2022

Presented to:
City of Opa-Locka, FL
3400 NW 135th St.
Opa-Locka, FL 33054-4708

Contact:
Becky Terry, PMP
Email: Becky.Terry@TylerTech.com
One Tyler Drive
Yarmouth, ME 04096

DocuSign Envelope ID: 253EBE9E-E967-4F83-973A-E95AFF34768C

Table of Contents

PART 1: EXECUTIVE SUMMARY 1

1. Project Overview 1
1.1 Introduction 1
1.2 Project Goals 1
1.3 Methodology 1

PART 2: PROJECT FOUNDATION 3

2. Project Governance 3

3. Project Scope Control 4
3.1 Managing Scope and Project Change 4
3.2 Change Control 4
3.3 Change Request Management 4

4. Acceptance Process 6

5. Roles and Responsibilities 6
5.1 Tyler Roles & Responsibilities 6
5.1.1 Tyler Executive Manager 7
5.1.2 Tyler Implementation Manager 7
5.1.3 Tyler Project Manager 7
5.1.4 Tyler Implementation Consultant 8
5.1.5 Tyler Sales 8
5.1.6 Tyler Technical Services 8
5.2 City Roles & Responsibilities 9
5.2.1 City Executive Sponsor 9
5.2.2 City Steering Committee 9
5.2.3 City Project Manager 9
5.2.4 City Functional Leads 11
5.2.5 City Power Users 11
5.2.6 City End Users 12
5.2.7 City Technical Lead 12
5.2.8 City Change Management Lead 13

PART 3: PROJECT PLAN 14

6. Project Stages 14
6.1 Initiate and Plan 15
6.1.1 Initial Coordination 15
6.1.2 Project/Phase Planning 16
6.1.3 Infrastructure Planning 17

DocuSign Envelope ID: 253EBE9E-E967-4F83-973A-E95AFF34768C

6.1.4 Stakeholder Meeting 18
6.1.5 GIS Preparation 19
6.1.6 Control Point 1: Initiate & Plan Stage Acceptance 20
6.2 Assess & Define 20
6.2.1 Solution Orientation 20
6.2.2 Current & Future State Analysis 21
6.2.3 Conversion Assessment 22
6.2.4 Intentionally left blank. 23
6.2.5 Intentionally left blank. 23
6.2.6 Control Point 2: Assess & Define Stage Acceptance 23
6.3 Prepare Solution 24
6.3.1 Initial System Deployment 24
6.3.2 Configuration 25
6.3.3 Process Refinement 26
6.3.4 Conversion Delivery 27
6.3.5 Intentionally left blank. 29
6.3.6 Intentionally left blank. 29
6.3.7 Control Point 3: Prepare Solution Stage Acceptance 29
6.4 Production Readiness 30
6.4.1 Solution Validation 30
6.4.2 Go-Live Readiness 31
6.4.3 End User Training 32
6.4.4 Control Point 4: Production Readiness Stage Acceptance 33
6.5 Production 33
6.5.1 Go-Live 33
6.5.2 Transition to Client Services 35
6.5.3 Post Go-Live Activities 35
6.5.4 Control Point 5: Production Stage Acceptance 36
6.6 Close 37
6.6.1 Phase Closeout 37
6.6.2 Project Closeout 38
6.6.3 Control Point 6: Close Stage Acceptance 39

7. General Assumptions 39
7.1 Project 39
7.2 Organizational Change Management 40
7.3 Resources and Scheduling 40
7.4 Data 40
7.5 Facilities 41

8. Glossary 42

PART 4: APPENDICES 45

9. Conversion 45
9.1 Enterprise Permitting & Licensing Conversion Summary 45

DocuSign Envelope ID: 253EBE9E-E967-4F83-973A-E95AFF34768C

9.1.1 Community Development 45
9.1.2 Business Management 45
9.2 Enterprise ERP Conversion Summary 46
9.2.1 Accounting COA 46
9.2.2 Accounting - Actuals 46
9.2.3 Accounting - Budgets 46
9.2.4 Accounts Payable Master 46
9.2.5 Accounts Payable - Checks 47
9.2.6 Accounts Payable - Invoices 47
9.2.7 Capital Assets Master 47
9.2.8 General Billing CID 47
9.2.9 General Billing – Recurring Invoices 47
9.2.10 General Billing – Bills 47
9.2.11 Project Grant Accounting 47
9.2.12 Project Grant Accounting - Actuals 47
9.2.13 Project Grant Accounting – Budget 47
9.2.14 Purchase Orders 48
9.2.15 Payroll 48
9.2.16 Payroll - Deductions 48
9.2.17 Payroll – Accrual Balances 48
9.2.18 Payroll – Accumulators 48
9.2.19 Payroll – Check History 48
9.2.20 Payroll – State Retirement Tables 48

10. Additional Appendices 49
10.1 Enterprise Permitting & Licensing Definitions 49
10.1.1 "Template Business Transactions" 49
10.1.2 "Unique Business Transactions" 49
10.1.3 "Geo-Rules" 49
10.1.4 "Automation Events" 50
10.1.5 "Enterprise Permitting & Licensing SDK/API (Toolkits)" 50
10.2 Koa Hills Services 50

11. Project Timeline 54
11.1 ERP Project Timeline 54
11.2 Data & Insights Project Plan 56
11.3 My Civic Timeline 56
11.4 Intentionally left blank. 57

DocuSign Envelope ID: 253EBE9E-E967-4F83-973A-E95AFF34768C

Part 1: Executive Summary

1. Project Overview

1.1 Introduction

Tyler Technologies ("Tyler") is the largest and most established provider of integrated software and technology services focused solely on the public sector. Tyler's end-to-end solutions empower public sector entities including local, state, provincial and federal government, to operate more efficiently and connect more transparently with their constituents and with each other. By connecting data and processes across disparate systems, Tyler's solutions transform how clients gain actionable insights that solve problems in their communities.

1.2 Project Goals

This Statement of Work ("SOW") documents the methodology, implementation stages, activities, and roles and responsibilities, and project scope listed in the Investment Summary of the Agreement between Tyler and the City (collectively the "Project").

The overall goals of the project are to:

- Successfully implement the contracted scope on time and on budget
- Increase operational efficiencies and empower users to be more productive
- Improve accessibility and responsiveness to external and internal customer needs
- Overcome current challenges and meet future goals
- Eliminate redundant data entry
- Provide a user-friendly user interface to promote system use and productivity
- Streamline business processes through automation, integration, and workflows
- Provide a single, comprehensive, and integrated solution to manage business functions

1.3 Methodology

This is accomplished by the City and Tyler working as a partnership and Tyler utilizing its depth of implementation experience. While each Project is unique, all will follow Tyler's six-stage methodology. Each of the six stages is comprised of multiple work packages, and each work package includes a narrative description, objectives, tasks, inputs, outputs/deliverables, assumptions, and a responsibility matrix.

Tailored specifically for Tyler's public sector clients, the project methodology contains Stage Acceptance Control Points throughout each Phase to ensure adherence to scope, budget, timeline controls, effective communications, and quality standards. Clearly defined, the project methodology repeats consistently across Phases, and is scaled to meet the City's complexity and organizational needs.

DocuSign Envelope ID: 253EBE9E-E967-4F83-973A-E95AFF34768C

Tyler's Six Stage Project Methodology

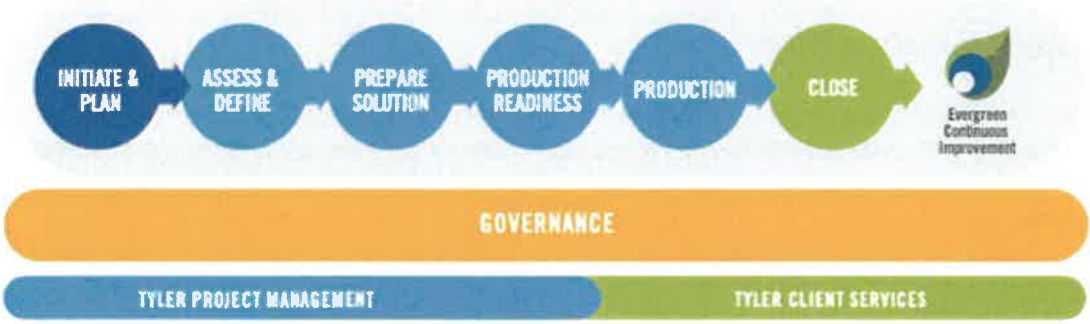

The methodology adapts to both single-phase and multiple-phase projects.

To achieve Project success, it is imperative that both the City and Tyler commit to including the necessary leadership and governance. During each stage of the Project, it is expected that the City and Tyler Project teams work collaboratively to complete tasks. An underlying principle of Tyler's Implementation process is to employ an iterative model where the City's business processes are assessed, configured, validated, and refined cyclically in line with the project budget. This approach is used in multiple stages and work packages as illustrated in the graphic below.

Iterative Project Model

The delivery approach is systematic, which reduces variability and mitigates risks to ensure Project success. As illustrated, some stages, along with work packages and tasks, are intended to be overlapping by nature to complete the Project efficiently and effectively.

Part 2: Project Foundation

2. Project Governance

Project governance is the management framework within which Project decisions are made. The role of Project governance is to provide a decision-making approach that is logical, robust, and repeatable. This allows organizations to have a structured approach for conducting its daily business in addition to project related activities.

This section outlines the resources required to meet the business needs, objectives, and priorities for the Project, communicate the goals to other Project participants, and provide support and guidance to accomplish these goals. Project governance defines the structure for escalation of issues and risks, Change Control review and authority, and Organizational Change Management activities. Throughout the Statement of Work Tyler has provided RACI Matrices for activities to be completed throughout the implementation which will further outline responsibilities of different roles in each stage. Further refinement of the governance structure, related processes, and specific roles and responsibilities occurs during the Initiate & Plan Stage.

The chart below illustrates an overall team perspective where Tyler and the City collaborate to resolve Project challenges according to defined escalation paths. If project managers do not possess authority to determine a solution, resolve an issue, or mitigate a risk, Tyler implementation management and the City Steering Committee become the escalation points to triage responses prior to escalation to the City and Tyler executive sponsors. As part of the escalation process, each Project governance tier presents recommendations and supporting information to facilitate knowledge transfer and issue resolution. The City and Tyler executive sponsors serve as the final escalation point.

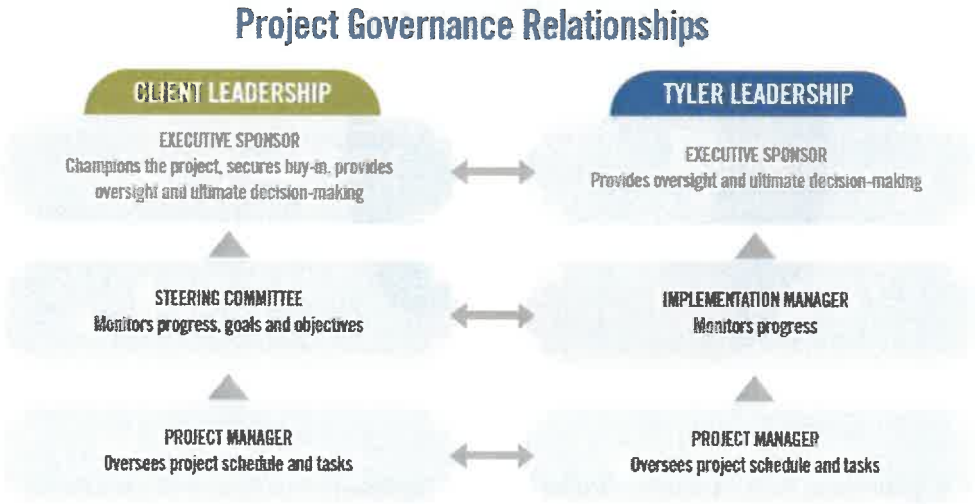

3. Project Scope Control

3.1 Managing Scope and Project Change

Project Management governance principles contend that there are three connected constraints on a Project: budget, timeline, and scope. These constraints, known as the "triple constraints" or project management triangle, define budget in terms of financial cost, labor costs, and other resource costs. Scope is defined as the work performed to deliver a product, service or result with the specified features and functions, while time is simply defined as the schedule. The Triple Constraint theory states that if you change one side of the triangle, the other two sides must be correspondingly adjusted. For example, if the scope of the Project is increased, cost and time to complete will also need to increase. The Project and executive teams will need to remain cognizant of these constraints when making impactful decisions to the Project. A simple illustration of this triangle is included here, showing the connection of each item and their relational impact to the overall Scope.

A pillar of any successful project is the ability to properly manage scope while allowing the appropriate level of flexibility to incorporate approved changes. Scope and changes within the project will be managed using the change control process outlined in the following section.

3.2 Change Control

It may become necessary to change the scope of this Project due to unforeseeable circumstances (e.g., new constraints or opportunities are discovered). This Project is being undertaken with the understanding that Project scope, schedule, and/or cost may need to change to produce optimal results for stakeholders. Changes to contractual requirements will follow the change control process specified in the final contract, and as described below.

3.3 Change Request Management

Should the need for a change to Project scope, schedule, and/or cost be identified during the Project, the change will be brought to the attention of the Steering Committee and an assessment of the change will occur. While such changes may result in additional costs and delays relative to the schedule, some changes may result in less cost to the City; for example, the City may decide it no longer needs a deliverable originally defined in the Project. The Change Request will include the following information:

- The nature of the change.
- A good faith estimate of the additional cost or associated savings to the City, if any.
- The timetable for implementing the change.
- The effect on and/or risk to the schedule, resource needs or resource responsibilities.

The City will use its good faith efforts to either approve or disapprove any Change Request within ten (10) Business Days (or other period as mutually agreeable between Tyler and the City). Any changes to the Project scope, budget, or timeline must be documented and approved in writing using a Change Request form. These changes constitute a formal amendment to the Statement of Work and will supersede any conflicting term in the Statement of Work.

Change Request Process

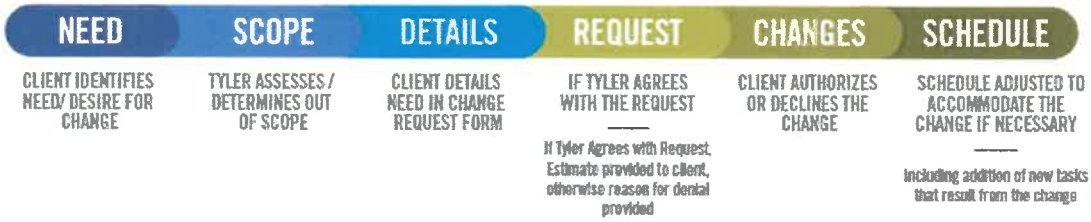

DocuSign Envelope ID: 253EBE9E-E967-4F83-973A-E95AFF34768C

4. Acceptance Process

The implementation of a Project involves many decisions to be made throughout its lifecycle. Decisions will vary from higher level strategy decisions to smaller, detailed Project level decisions. It is critical to the success of the Project that each City office or department designates specific individuals for making decisions on behalf of their offices or departments.

Both Tyler and the City will identify representative project managers. These individuals will represent the interests of all stakeholders and serve as the primary contacts between the two organizations.

The coordination of gaining City feedback and approval on Project deliverables will be critical to the success of the Project. The City project manager will strive to gain deliverable and decision approvals from all authorized City representatives. Given that the designated decision-maker for each department may not always be available, there must be a designated proxy for each decision point in the Project. Assignment of each proxy will be the responsibility of the leadership from each City department. The proxies will be named individuals that have the authorization to make decisions on behalf of their department.

The following process will be used for accepting Deliverables and Control Points:

- The City shall have five (5) business days from the date of delivery, or as otherwise mutually agreed upon by the parties in writing, to accept each Deliverable or Control Point. If the City does not provide acceptance or acknowledgement within five (5) business days, or the otherwise agreed upon timeframe, not to be unreasonably withheld, Tyler deems the Deliverable or Control Point as accepted.
- If the City does not agree the Deliverable or Control Point meets requirements, the City shall notify Tyler project manager(s), in writing, with reasoning within five (5) business days, or the otherwise agreed-upon timeframe, not to be unreasonably withheld, of receipt of the Deliverable.
- Tyler shall address any deficiencies and redeliver the Deliverable or Control Point. The City shall then have two (2) business days from receipt of the redelivered Deliverable or Control Point to accept or again submit written notification of reasons for rejecting the milestone. If the City does not provide acceptance within two (2) business days, or the otherwise agreed upon timeframe, not to be unreasonably withheld, Tyler deems the Deliverable or Control Point as accepted.

5. Roles and Responsibilities

The following defines the roles and responsibilities of each Project resource for the City and Tyler. Roles and responsibilities may not follow the organizational chart or position descriptions at the City, but are roles defined within the Project. It is common for individual resources on both the Tyler and City project teams to fill multiple roles. Similarly, it is common for some roles to be filled by multiple people.

5.1 Tyler Roles & Responsibilities

Tyler assigns a project manager prior to the start of each Phase of the Project (some Projects may only be one Phase in duration). Additional Tyler resources are assigned as the schedule develops and as needs arise.

5.1.1 Tyler Executive Manager

Tyler executive management has indirect involvement with the Project and is part of the Tyler escalation process. This team member offers additional support to the Project team and collaborates with other Tyler department managers as needed to escalate and facilitate implementation Project tasks and decisions.

- Provides clear direction for Tyler staff on executing on the Project Deliverables to align with satisfying the City 's overall organizational strategy.
- Authorizes required Project resources.
- Resolves all decisions and/or issues not resolved at the implementation management level as part of the escalation process.
- Acts as the counterpart to the City 's executive sponsor.

5.1.2 Tyler Implementation Manager

- Tyler implementation management has indirect involvement with the Project and is part of the Tyler escalation process. The Tyler project managers consult implementation management on issues and outstanding decisions critical to the Project. Implementation management works toward a solution with the Tyler Project Manager or with City management as appropriate. Tyler executive management is the escalation point for any issues not resolved at this level.
- Assigns Tyler Project personnel.
- Provides support for the Project team.
- Provides management support for the Project to ensure it is staffed appropriately and staff have necessary resources.
- Monitors Project progress including progress towards agreed upon goals and objectives.

5.1.3 Tyler Project Manager

- The Tyler project manager(s) provides oversight of the Project, coordination of Tyler resources between departments, management of the Project budget and schedule, effective risk, and issue management, and is the primary point of contact for all Project related items. As requested by the City, the Tyler Project Manager provides regular updates to the City Steering Committee and other Tyler governance members. Tyler Project Manager's role includes responsibilities in the following areas:

5.1.3.1 Contract Management

- Validates contract compliance throughout the Project.
- Ensures Deliverables meet contract requirements.
- Acts as primary point of contact for all contract and invoicing questions.
- Prepares and presents contract milestone signoffs for acceptance by the City project manager(s).
- Coordinates Change Requests, if needed, to ensure proper Scope and budgetary compliance.

5.1.3.2 Planning

- Delivers project planning documents.
- Defines Project tasks and resource requirements.
- Develops initial Project schedule and Project Management Plan.
- Collaborates with the City project manager(s) to plan and schedule Project timelines to achieve on-time implementation.

5.1.3.3 Implementation Management

- Tightly manages Scope and budget of Project to ensure Scope changes and budget planned versus actual are transparent and handled effectively and efficiently.
- Establishes and manages a schedule and Tyler resources that properly support the Project Schedule and are also in balance with Scope/budget.
- Establishes risk/issue tracking/reporting process between the City and Tyler and takes all necessary steps to proactively mitigate these items or communicate with transparency to the City any items that may impact the outcomes of the Project.
- Collaborates with the City 's project manager(s) to establish key business drivers and success indicators that will help to govern Project activities and key decisions to ensure a quality outcome of the project.
- Collaborates with the City 's project manager(s) to set a routine communication plan that will aide all Project team members, of both the City and Tyler, in understanding the goals, objectives, status, and health of the Project.

5.1.3.4 Resource Management

- Acts as liaison between Project team and Tyler manager(s).
- Identifies and coordinates all Tyler resources across all applications, Phases, and activities including development, forms, installation, reports, implementation, and billing.
- Provides direction and support to Project team.
- Manages the appropriate assignment and timely completion of tasks as defined in the Project Schedule, task list, and Go-Live Checklist.
- Assesses team performance and adjusts as necessary.
- Consulted on in Scope 3rd party providers to align activities with ongoing Project tasks.

5.1.4 Tyler Implementation Consultant

- Completes tasks as assigned by the Tyler project manager(s).
- Documents activities for services performed by Tyler.
- Guides the City through software validation process following configuration.
- Assists during Go-Live process and provides support until the City transitions to Client Services.
- Facilitates training sessions and discussions with the City and Tyler staff to ensure adequate discussion of the appropriate agenda topics during the allotted time.
- May provide conversion review and error resolution assistance.

5.1.5 Tyler Sales

- Supports Sales to Implementation knowledge transfer during Initiate & Plan.
- Provides historical information, as needed, throughout implementation.
- Participates in pricing activities if additional licensing and/or services are needed.

5.1.6 Tyler Technical Services

- Maintains Tyler infrastructure requirements and design document(s).
- Involved in system infrastructure planning/review(s).
- Provides first installation of licensed software with initial database on servers.
- Supports and assists the project team with technical/environmental issues/needs.
- Deploys Tyler products.

DocuSign Envelope ID: 253EBE9E-E967-4F83-973A-E95AFF34768C

- Conducts GIS Planning.
- Reviews GIS data and provides feedback to the City.
- Loads City provided GIS data into the system.

5.2 City Roles & Responsibilities

City resources will be assigned prior to the start of each Phase of the Project. One person may be assigned to multiple Project roles.

5.2.1 City Executive Sponsor

The City executive sponsor provides support to the Project by providing strategic direction and communicating key issues about the Project and its overall importance to the organization. When called upon, the executive sponsor also acts as the final authority on all escalated Project issues. The executive sponsor engages in the Project, as needed, to provide necessary support, oversight, guidance, and escalation, but does not participate in day-to-day Project activities. The executive sponsor empowers the City steering committee, project manager(s), and functional leads to make critical business decisions for the City.

- Champions the project at the executive level to secure buy-in.
- Authorizes required project resources.
- Actively participates in organizational change communications.

5.2.2 City Steering Committee

The City steering committee understands and supports the cultural change necessary for the Project and fosters an appreciation for the Project's value throughout the organization. The steering committee oversees the City project manager and Project through participation in regular internal meetings. The City steering committee remains updated on all Project progress, Project decisions, and achievement of Project milestones. The City steering committee also serves as primary level of issue resolution for the Project.

- Works to resolve all decisions and/or issues not resolved at the project manager level as part of the escalation process.
- Attends all scheduled steering committee meetings.
- Provides support for the project team.
- Assists with communicating key project messages throughout the organization.
- Prioritizes the project within the organization.
- Ensures the project staffed appropriately and that staff have necessary resources.
- Monitors project progress including progress towards agreed upon goals and objectives.
- Has the authority to approve or deny changes impacting the following areas:
    - Cost
    - Scope
    - Schedule
    - Project Goals
    - City Policies
    - Needs of other client projects

5.2.3 City Project Manager

The City shall assign project manager(s) prior to the start of this project with overall responsibility and authority to make decisions related to Project Scope, scheduling, and task assignment. The City Project

DocuSign Envelope ID: 253EBE9E-E967-4F83-973A-E95AFF34768C

Manager should communicate decisions and commitments to the Tyler project manager(s) in a timely and efficient manner. When the City project manager(s) do not have the knowledge or authority to make decisions, he or she engages the necessary resources to participate in discussions and make decisions in a timely fashion to avoid Project delays. The City project manager(s) are responsible for reporting to the City steering committee and determining appropriate escalation points.

5.2.3.1 Contract Management

- Validates contract compliance throughout the project.
- Ensures that invoicing and Deliverables meet contract requirements.
- Acts as primary point of contact for all contract and invoicing questions. Collaborates on and approves Change Requests, if needed, to ensure proper scope and budgetary compliance.

5.2.3.2 Planning

- Reviews and accepts project planning documents.
- Defines project tasks and resource requirements for the City project team.
- Collaborates in the development and approval of the project schedule.
- Collaborates with Tyler project manager(s) to plan and schedule project timelines to achieve on-time implementation.

5.2.3.3 Implementation Management

- Tightly manages project budget and scope.
- Collaborates with Tyler project manager(s) to establish a process and approval matrix to ensure that scope changes and budget (planned versus actual) are transparent and handled effectively and efficiently.
- Collaborates with Tyler project manager to establish and manage a schedule and resource plan that properly supports the project schedule as a whole and is also in balance with scope and budget.
- Collaborates with Tyler project manager(s) to establish risk and issue tracking and reporting process between the City and Tyler and takes all necessary steps to proactively mitigate these items or communicate with transparency to Tyler any items that may impact the outcomes of the project.
- Collaborates with Tyler project manager(s) to establish key business drivers and success indicators that will help to govern project activities and key decisions to ensure a quality outcome of the project.
- Routinely communicates with both the City staff and Tyler, aiding in the understanding of goals, objectives, current status, and health of the project by all team members.
- Manages the requirements gathering process and ensure timely and quality business requirements are being provided to Tyler.

5.2.3.4 Resource Management

- Acts as liaison between project team and stakeholders.
- Identifies and coordinates all City resources across all modules, phases, and activities including data conversions, forms design, hardware and software installation, reports building, and satisfying invoices.
- Provides direction and support to project team.
- Builds partnerships among the various stakeholders, negotiating authority to move the project forward.
- Manages the appropriate assignment and timely completion of tasks as defined.
- Assesses team performance and takes corrective action, if needed.

- Provides guidance to City technical teams to ensure appropriate response and collaboration with Tyler Technical Support Teams to ensure timely response and appropriate resolution.
- Owns the relationship with in-Scope 3rd party providers and aligns activities with ongoing project tasks.
- Ensures that users have appropriate access to Tyler project toolsets as required.
- Conducts training on proper use of toolsets.
- Validates completion of required assignments using toolsets.

5.2.4 City Functional Leads

- Makes business process change decisions under time sensitive conditions.
- Communicates existing business processes and procedures to Tyler consultants.
- Assists in identifying business process changes that may require escalation.
- Contributes business process expertise for Current & Future State Analysis.
- Identifies and includes additional subject matter experts to participate in Current & Future State Analysis.
- Validates that necessary skills have been retained by end users.
- Provides End Users with dedicated time to complete required homework tasks.
- Acts as an ambassador/champion of change for the new process and provide business process change support.
- Identifies and communicates any additional training needs or scheduling conflicts to the City project manager.
- Actively participates in all aspects of the implementation, including, but not limited to, the following key activities:
    - Task completion
    - Stakeholder Meeting
    - Project Management Plan development
    - Schedule development
    - Maintenance and monitoring of risk register
    - Escalation of issues
    - Communication with Tyler project team
    - Coordination of City resources
    - Attendance at scheduled sessions
    - Change management activities
    - Modification specification, demonstrations, testing and approval assistance
    - Data analysis assistance
    - Decentralized end user training
    - Process testing
    - Solution Validation

5.2.5 City Power Users

- Participate in project activities as required by the project team and project manager(s).
- Provide subject matter expertise on the City business processes and requirements.
- Act as subject matter experts and attend Current & Future State Analysis sessions as needed.
- Attend all scheduled training sessions.
- Participate in all required post-training processes as needed throughout project.
- Test all application configuration to ensure it satisfies business process requirements.
- Become application experts.
- Participate in Solution Validation.

- Adopt and support changed procedures.
- Complete all deliverables by the due dates defined in the project schedule.
- Demonstrate competency with Tyler products processing prior to Go-live.
- Provide knowledge transfer to the City staff during and after implementation.
- Participate in conversion review and validation.

5.2.6 City End Users

- Attend all scheduled training sessions.
- Become proficient in application functions related to job duties.
- Adopt and utilize changed procedures.
- Complete all deliverables by the due dates defined in the project schedule.
- Utilize software to perform job functions at and beyond Go-live.

5.2.7 City Technical Lead

- Coordinates updates and releases with Tyler as needed.
- Coordinates the copying of source databases to training/testing databases as needed for training days.
- Coordinates and adds new users, printers and other peripherals as needed.
- Validates that all users understand log-on process and have necessary permission for all training sessions.
- Coordinates interface development for City third party interfaces.
- Develops or assists in creating reports as needed.
- Ensures on-site system meets specifications provided by Tyler.
- Assists with software installation as needed.
- Extracts and transmits conversion data and control reports from the City's legacy system per the conversion schedule set forth in the project schedule.

5.2.7.1 City GIS

- Participates in GIS planning activities.
- Responsible for management and maintenance of City GIS infrastructure and data.
- Ensures GIS data/service endpoints are in alignment with Tyler software requirements.
- Provides Tyler implementation team with GIS data/service access information.

5.2.7.2 City Upgrade Coordination

- Becomes familiar with the software upgrade process and required steps.
- Becomes familiar with Tyler's releases and updates.
- Utilizes Tyler resources to stay abreast of the latest Tyler releases and updates, as well as the latest helpful tools to manage the City's software upgrade process.
- Assists with the software upgrade process during implementation.
- Manages software upgrade activities post-implementation.
- Manages software upgrade plan activities.
- Coordinates software upgrade plan activities with City and Tyler resources.
- Communicates changes affecting users and department stakeholders.
- Obtains department stakeholder acceptance to upgrade production environment.

DocuSign Envelope ID: 253EBE9E-E967-4F83-973A-E95AFF34768C

5.2.8 City Change Management Lead

- Validates that users receive timely and thorough communication regarding process changes.
- Provides coaching to supervisors to prepare them to support users through the project changes.
- Identifies the impact areas resulting from project activities and develops a plan to address them proactively.
- Identifies areas of resistance and develops a plan to reinforce the change.
- Monitors post-production performance and new process adherence.

Part 3: Project Plan

6. Project Stages

Work Breakdown Structure

The Work Breakdown Structure (WBS) is a hierarchical representation of a Project or Phase broken down into smaller, more manageable components. The top-level components are called "Stages" and the second level components are called "Work Packages". The work packages, shown below each stage, contain the high-level work to be done. The detailed Project Schedule, developed during Project/Phase Planning and finalized during subsequent stages, lists the tasks to be completed within each work package. Each stage ends with a "Control Point", confirming the work performed during that stage of the Project has been accepted by the City.

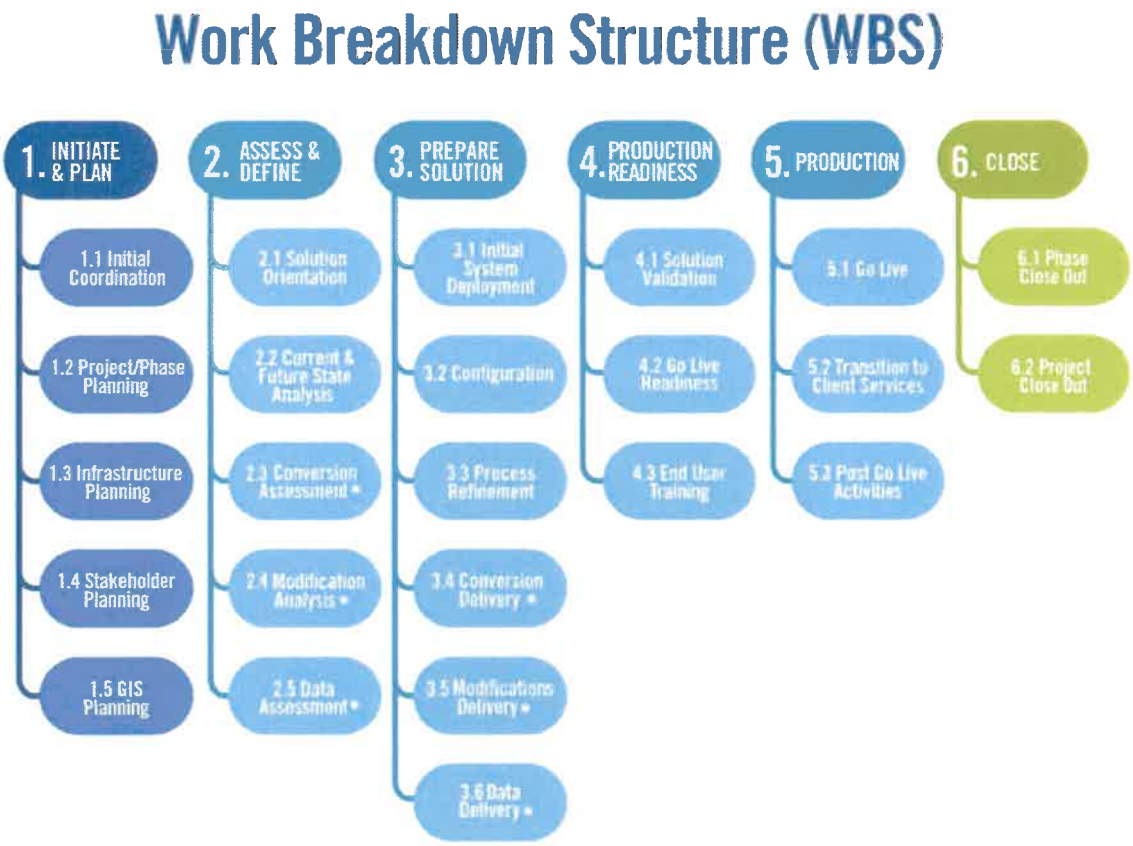

Items noted with an asterisk in the graphic above relate to specific products and services. If those products and services are not included in the scope of the contract, these specific work packages will be noted as "Intentionally Left Blank" in Section 6 of the Statement of Work.

6.1 Initiate and Plan

The Initiate and Plan stage involves Project initiation, infrastructure, and planning. This stage creates a foundation for the Project by identifying and establishing sequence and timing for each Phase as well as verifying scope for the Project. This stage will be conducted at the onset of the Project, with a few unique items being repeated for the additional Phases as needed.

6.1.1 Initial Coordination

Prior to Project commencement, Tyler management assigns project manager(s). Additional Project resources will be assigned later in the Project as a Project schedule is developed. Tyler provides the City with initial Project documents used to gather names of key personnel, their functional role as it pertains to the Project, as well as any blackout dates to consider for future planning. the City gathers the information requested by the provided deadline ensuring preliminary planning and scheduling can be conducted moving the Project forward in a timely fashion. Internally, the Tyler Project Manager(s) coordinate with sales to ensure transfer of vital information from the sales process prior to scheduling a Project Planning Meeting with the City's team. During this step, Tyler will work with the City to establish the date(s) for the Project and Phase Planning session.

Objectives:

- Formally launch the project.
- Establish project governance.
- Define and communicate governance for Tyler.
- Identify City project team.

STAGE 1	Initial Coordination																	
	Tyler								City									
RACI MATRIX KEY: R = Responsible A = Accountable C = Consulted I = Informed	Executive Manager	Implementation Manager	Project Manager	Implementation Consultant	Data Experts	Modification Services	Technical Services	Client Services	Executive Sponsor	Steering Committee	Project Manager	Functional Leads	Change Management Leads	Subject Matter Experts (Power	Department Heads	End Users	Technical Leads
Tyler project team is assigned	A	R	C	I	I	I	I		I		I						
City project team is assigned									A	I	R	I	I	I			
Provide initial project documents to the City		A	R	C			C		I		I						
Gather preliminary information requested			I						A		R	C		C		C	C
Sales to implementation knowledge transfer		A	R	I	I	I	I				I						
Create Project Portal to store project artifacts and facilitate communication		A	R								I						

Inputs	Contract documents
	Statement of Work

Outputs/Deliverables	Completed initial project documents
	Project portal

Work package assumptions:

- Project activities begin after the agreement has been fully executed.

6.1.2 Project/Phase Planning

Project and Phase planning provides an opportunity to review the contract, software, data conversions and services purchased, identify applications to implement in each Phase (if applicable), and discuss implementation timeframes.

During this work package Tyler will work with the City to coordinate and plan a formal Project planning meeting(s). This meeting signifies the start of the Project and should be attended by all City Project team members and the Tyler Project Manager. The meeting provides an opportunity for Tyler to introduce its implementation methodology, terminology, and Project management best practices to the City's Project Team. This will also present an opportunity for project managers and Project sponsors to begin to discuss Project communication, metrics, status reporting and tools to be used to measure Project progress and manage change.

Tyler will work with the City Project Team to prepare and deliver the Project Management Plan as an output of the planning meeting. This plan will continue to evolve and grow as the Project progresses and will describe how the project will be executed, monitored, and controlled.

During project planning, Tyler will introduce the tools that will be used throughout the implementation. Tyler will familiarize the City with these tools during project planning and make them available for review and maintenance as applicable throughout the project. Some examples are Solution validation plan, issue log, and go-live checklist.

STAGE 1	Project/Phase Planning																	
	Tyler								City									
RACI MATRIX KEY: R = Responsible A = Accountable C = Consulted I = Informed	Executive Manager	Implementation Manager	Project Manager	Implementation Consultant	Data Experts	Modification Services	Technical Services	Client Services	Executive Sponsor	Steering Committee	Project Manager	Functional Leads	Change Management Leads	Subject Matter Experts (Power	Department Heads	End Users	Technical Leads
Schedule and conduct planning session(s)		A	R						I		C	C	I				

Develop Project Management Plan		A	R						I		C	C	I			
Develop initial project schedule		A	R	I	I	I	I		I	I	C	C	I	I	C		I

Inputs	Contract documents
	Statement of Work
	Guide to Starting Your Project

Outputs / Deliverables		Acceptance Criteria [only] for Deliverables
	Project Management Plan	Delivery of document
	Project Operational Plan	Delivery of document
	Initial Project Schedule	City provides acceptance of schedule based on resource availability, project budget, and goals.

Work package assumptions:

- City has reviewed and completed the Guide to Starting Your Project document.

6.1.3 Infrastructure Planning

Procuring required hardware and setting it up properly is a critical part of a successful implementation. This task is especially important for Tyler-hosted/SaaS deployment models. Tyler will be responsible for building the environments for a hosted/SaaS deployment, unless otherwise identified in the Agreement. Tyler will install Licensed Software on application server(s) or train the City to install License Software. The City is responsible for the installation and setup of all peripheral devices.

Objectives:

- Ensure the City's infrastructure meets Tyler's application requirements.
- Ensure the City's infrastructure is scheduled to be in place and available for use on time.

STAGE 1	Infrastructure Planning																
	Tyler								City								
RACI MATRIX KEY: R = Responsible A = Accountable C = Consulted I = Informed	Executive Manager	Implementation Manager	Project Manager	Implementation Consultant	Data Experts	Modification Services	Technical Services	Client Services	Executive Sponsor	Steering Committee	Project Manager	Functional Leads	Change Management Leads	Subject Matter Experts	Department Heads	End Users	Technical Leads
Provide Infrastructure Requirements and Design Document		A	R		C		C				I						I
Initial Infrastructure Meeting		A	R		C		C				C						C

*Schedule SaaS Environment Availability		A	R				C				I					
*Schedule Hardware to be Available for Installation			I				I		A		R					C
Schedule Installation of All Licensed Software		A	R				C				I					I
Infrastructure Audit		A	R				C				I					C

Inputs	1. Initial Infrastructure Requirements and Design Document

Outputs / Deliverables		Acceptance Criteria [only] for Deliverables
	1. Completed Infrastructure Requirements and Design Document	Delivery of Document
	2. Infrastructure Audit	System Passes Audit Criteria

6.1.4 Stakeholder Meeting

Communication of the Project planning outcomes to the City Project team, executives and other key stakeholders is vital to Project success. The Stakeholder meeting is a strategic activity to inform, engage, gain commitment, and instill confidence in the City team. During the meeting, the goals and objectives of the Project will be reviewed along with detail on Project scope, implementation methodology, roles and responsibilities, Project timeline and schedule, and keys to Project success.

Objectives:

- Formally present and communicate the project activities and timeline.
- Communicate project expectations.

STAGE 1	**Stakeholder Meeting**																
	Tyler								City								
RACI MATRIX KEY: R = Responsible A = Accountable C = Consulted I = Informed	Executive Manager	Implementation Manager	Project Manager	Implementation Consultant	Data Experts	Modification Services	Technical Services	Client Services	Executive Sponsor	Steering Committee	Project Manager	Functional Leads	Change Management Leads	Subject Matter Experts (Power	Department Heads	End Users	Technical Leads
Create Stakeholder Meeting Presentation	I	A	R	I	I				I	I	C		I				
Review Stakeholder Meeting Presentation		I	C						A		R		C				
Perform Stakeholder Meeting Presentation	I	A	R	I	I				I	I	C	I	I	I	I	I	I

Inputs	Agreement
	SOW
	Project Management Plan

Outputs / Deliverables		Acceptance Criteria [only] for Deliverables
	Stakeholder Meeting Presentation	

Work package assumptions:

- None

6.1.5 GIS Preparation

GIS data is a core part of many Tyler applications. Other City offices/products may also use this data and have different GIS requirements. A key focus of this preparation will be the process for developing the GIS data for use with Tyler applications. This can be an iterative process, so it is important to begin preparation early.

Objectives:

- Identify all City GIS data sources and formats.
- Tyler to understand the City's GIS needs and practices.
- Ensure the City's GIS data meets Tyler product requirements.

STAGE 1	GIS Preparation																
	Tyler								City								
RACI MATRIX KEY: R = Responsible A = Accountable C = Consulted I = Informed	Executive Manager	Implementation Manager	Project Manager	Implementation Consultant	Data Experts	Modification Services	Technical Services	Client Services	Executive Sponsor	Steering Committee	Project Manager	Functional Leads	Change Management Leads	Subject Matter Experts (Power	Department Heads	End Users	Technical Leads
Initial GIS Planning Meeting		A	R				C				C						C
Determine all GIS Data Sources			I				I		A		R						C
Provide Source GIS Data			I				I		A		R						C
Review GIS Data and Provide Feedback		A	R				C				I						C

Inputs	GIS Requirements Document

Outputs / Deliverables		Acceptance Criteria [only] for Deliverables
	Production Ready Map Data	Meets Tyler GIS Requirements.

Work package assumptions:

- GIS data provided to Tyler is accurate and complete.
- GIS data provided to Tyler is current.
- City is responsible for maintaining the GIS data.

6.1.6 Control Point 1: Initiate & Plan Stage Acceptance

Acceptance criteria for this stage includes completion of all criteria listed below.

Note: Advancement to the Assess & Define stage is not dependent upon Tyler's receipt of this stage acceptance.

Initiate & Plan Stage Deliverables:

- Project Management Plan
- Initial Project Schedule

Initiate & Plan stage acceptance criteria:

- All stage deliverables accepted based on acceptance criteria previously defined
- Project governance defined
- Project portal made available to the City
- Stakeholder meeting complete
- GIS Data Production Ready
- Completed Infrastructure Requirements and Design Document
- System Passes Infrastructure Audit (as applicable)

6.2 Assess & Define

The Assess & Define stage will provide an opportunity to gather information related to current City business processes. This information will be used to identify and define business processes utilized with Tyler software. The City collaborates with Tyler providing complete and accurate information to Tyler staff and assisting in analysis, understanding current workflows and business processes.

6.2.1 Solution Orientation

The Solution Orientation provides the Project stakeholders a high-level understanding of the solution functionality prior to beginning the current and future state analysis. The primary goal is to establish a foundation for upcoming conversations regarding the design and configuration of the solution.

Tyler utilizes a variety of tools for the Solution Orientation, focusing on City team knowledge transfer such as: eLearning, documentation, or walkthroughs. The City team will gain a better understanding of the major processes and focus on data flow, the connection between configuration options and outcome, integration, and terminology that may be unique to Tyler's solution.

Objectives:

- Provide a basic understanding of system functionality.
- Prepare the City for current and future state analysis.

STAGE 2	Solution Orientation																	
	Tyler								City									
RACI MATRIX KEY: R = Responsible A = Accountable C = Consulted I = Informed	Executive Manager	Implementation Manager	Project Manager	Implementation Consultant	Data Experts	Modification Services	Technical Services	Client Services	Executive Sponsor	Steering Committee	Project Manager	Functional Leads	Change Management Leads	Subject Matter Experts (Power	Department Heads	End Users	Technical Leads
Provide pre-requisites			A	R							I	I		I	I		I
Complete pre-requisites											A	R		C			C
Conduct orientation			A	R							I	I		I	I		I

Inputs	Solution orientation materials
	Training Plan

6.2.2 Current & Future State Analysis

The Current & Future State Analysis provides the Project stakeholders and Tyler an understanding of process changes that will be achieved with the new system.

The City and Tyler will evaluate current state processes, options within the new software, pros and cons of each based on current or desired state and make decisions about the future state configuration and processing. This may occur before or within the same timeframe as the configuration work package. The options within the new software will be limited to the scope of this implementation and will make use of standard Tyler functionality.

The City will adopt the existing Tyler solution wherever possible to avoid project schedule and quality risk from over customization of Tyler products. It is the City's responsibility to verify that in-scope requirements are being met throughout the implementation if functional requirements are defined as part of the contract. The following guidelines will be followed when evaluating if a modification to the product is required:

- A reasonable business process change is available.
- Functionality exists which satisfies the requirement.
- Configuration of the application satisfies the requirement.
- An in-scope modification satisfies the requirement.

Requirements that are not met will follow the agreed upon change control process and can have impacts on the project schedule, scope, budget, and resource availability.

STAGE 2	Current & Future State Analysis	
	Tyler	City

DocuSign Envelope ID: 253EBE9E-E967-4F83-973A-E95AFF34768C

RACI MATRIX KEY: R = Responsible A = Accountable C = Consulted I = Informed	Executive Manager	Implementation Manager	Project Manager	Implementation Consultant	Data Experts	Modification Services	Technical Services	Client Services	Executive Sponsor	Steering Committee	Project Manager	Functional Leads	Change Management Leads	Subject Matter Experts (Power	Department Heads	End Users	Technical Leads
Current State process review			A	R	I	I	I				C	C	C	C			C
Discuss future-state options			A	R	C	C	C				C	C	C	C			C
Make future-state decisions (non-COTS)			C	C	C	C	C				A	R	I	C			C
Document anticipated configuration options required to support future state			A	R	C	C	C				I	I	I	I			I

Inputs	City current state documentation
	Solution Orientation completion

Outputs / Deliverables		Acceptance Criteria [only] for Deliverables
	Documentation that describes future-state decisions and configuration options to support future-state decisions.	Delivery of document

Work package assumptions:

- City attendees possess sufficient knowledge and authority to make future state decisions.
- The City is responsible for any documentation of current state business processes.
- The City can effectively communicate current state processes.

6.2.3 Conversion Assessment

Data Conversions are a major effort in any software implementation. Tyler's conversion tools facilitate the predictable, repeatable conversion process that is necessary to support a successful transition to the Tyler system. The first step in this process is to perform an assessment of the existing ("legacy") system(s), to better understand the source data, risks, and options available. Once the data has been analyzed, the plan for data conversion is completed and communicated to the appropriate stakeholders.

Objectives:

- Communicate a common understanding of the project goals with respect to data.
- Ensure complete and accurate source data is available for review/transfer.
- Map the data from the source to the Tyler system.
- Document the data conversion/loading approach.

STAGE 2	Data Conversion Assessment															
	Tyler								City							
RACI MATRIX KEY: R = Responsible A = Accountable C = Consulted I = Informed	Executive Manager	Implementation Manager	Project Manager	Implementation Consultant	Data Experts	Modification Services	Technical Services	Client Services	Executive Sponsor	Steering Committee	Project Manager	Functional Leads	Change Management Leads	Subject Matter Experts (Power	Department Heads	End Users	Technical Leads
Extract Data from Source Systems			I		C						A						R
Review and Scrub Source Data			I	I	I						A	R		C			I
Build/Update Data Conversion Plan			R	C	C						C	I	I	I			I

Inputs	City Source data
	City Source data Documentation (if available)

Outputs / Deliverables		Acceptance Criteria [only] for Deliverables
	Data Conversion Plan built/updated	City Acceptance of Data Conversion Plan, if Applicable

Work package assumptions:

- Tyler will be provided with data from the Legacy system(s) in a mutually agreed upon format.
- Tyler will work with the City representatives to identify business rules before writing the conversion.
- City subject matter experts and resources most familiar with the current data will be involved in the data conversion planning effort.

6.2.4 Intentionally left blank.

6.2.5 Intentionally left blank.

6.2.6 Control Point 2: Assess & Define Stage Acceptance

Acceptance criteria for this Stage includes completion of all criteria listed below.

Note: Advancement to the Prepare Solution Stage is dependent upon Tyler's receipt of the Stage Acceptance.

Assess & Define Stage Deliverables:

- Documentation of future state decisions and configuration options to support future state decisions.
- Modification specification document.

- Assess & Define Stage Acceptance Criteria:
- All stage deliverables accepted based on criteria previously defined.
- Solution Orientation is delivered.
- Conversion data extracts are received by Tyler.
- Data conversion plan built.

6.3 Prepare Solution

During the Prepare Solution stage, information gathered during the Initiate & Plan and Assess & Define stages will be used to install and configure the Tyler software solution. Software configuration will be validated by the City against future state decisions defined in previous stages and processes refined as needed to ensure business requirements are met.

6.3.1 Initial System Deployment

The timely availability of the Tyler Solution is important to a successful Project implementation. The success and timeliness of subsequent work packages are contingent upon the initial system deployment of Tyler Licensed Software on an approved network and infrastructure. Delays in executing this work package can affect the project schedule.

Objectives:

- All licensed software is installed and operational.
- The City can access the software.

STAGE 3	Initial System Deployment (Hosted/SaaS)*																
	Tyler								City								
RACI MATRIX KEY: R = Responsible A = Accountable C = Consulted I = Informed	Executive Manager	Implementation Manager	Project Manager	Implementation Consultant	Data Experts	Modification Services	Technical Services	Client Services	Executive Sponsor	Steering Committee	Project Manager	Functional Leads	Change Management Leads	Subject Matter Experts (Power	Department Heads	End Users	Technical Leads
Prepare hosted environment			A				R				I						C
Install Licensed Software with Initial Database on Server(s) for Included Environments			A				R				I						C
Install Licensed Software on City Devices (if applicable)			I				C				A						R

Tyler System Administration Training (if applicable)			A				R				I					C

Outputs / Deliverables		Acceptance Criteria [only] for Deliverables
	Licensed Software is Installed on the Server(s)	Software is accessible
	Licensed Software is Installed on City Devices (if applicable)	Software is accessible
	Installation Checklist/System Document	System Passes
	Infrastructure Design Document (C&J – If Applicable)	

Work package assumptions:

- The most current available version of the Tyler Licensed Software will be installed.
- The City will provide network access for Tyler modules, printers, and Internet access to all applicable City and Tyler Project staff.

6.3.2 Configuration

The purpose of Configuration is to prepare the software product for validation.

Tyler staff collaborates with the City to complete software configuration based on the outputs of the future state analysis performed during the Assess and Define Stage. The City collaborates with Tyler staff iteratively to validate software configuration.

Objectives:

- Software is ready for validation.
- Educate the City Power User how to configure and maintain software.
- Prepare standard interfaces for process validation (if applicable).

STAGE 3	Configuration																	
	Tyler								City									
RACI MATRIX KEY: R = Responsible A = Accountable C = Consulted I = Informed	Executive Manager	Implementation Manager	Project Manager	Implementation Consultant	Data Experts	Modification Services	Technical Services	Client Services	Executive Sponsor	Steering Committee	Project Manager	Functional Leads	Change Management Leads	Subject Matter Experts (Power	Department Heads	End Users	Technical Leads	
Conduct configuration training			A	R							I	C		C				

Complete Tyler configuration tasks (where applicable)			A	R							I	I		I			
Complete City configuration tasks (where applicable)			I	C							A	R		C			
Standard interfaces configuration and training (if applicable)			A	R			C				I	C		C			C
Updates to Solution Validation testing plan			C	C							A	R		C			C

Inputs	Documentation that describes future state decisions and configuration options to support future state decisions.

Outputs / Deliverables		Acceptance Criteria [only] for Deliverables
	Configured System	N/A

Work package assumptions:

- Tyler provides guidance for configuration options available within the Tyler software. The City is responsible for making decisions when multiple options are available.

6.3.3 Process Refinement

Tyler will educate the City users on how to execute processes in the system to prepare them for the validation of the software. The City collaborates with Tyler staff iteratively to validate software configuration options to support future state.

Objectives:

- Ensure that the City understands future state processes and how to execute the processes in the software.
- Refine each process to meet the business requirements.
- Validate standard interfaces, where applicable.
- Validate forms and reports, where applicable.

STAGE 3	Process Refinement																
	Tyler								City								
RACI MATRIX KEY: R = Responsible A = Accountable C = Consulted I = Informed	Executive Manager	Implementation Manager	Project Manager	Implementation Consultant	Data Experts	Modification Services	Technical Services	Client Services	Executive Sponsor	Steering Committee	Project Manager	Functional Leads	Change Management Leads	Subject Matter Experts (Power	Department Heads	End Users	Technical Leads

Conduct process training			A	R							I	C	I	C				
Confirm process decisions			I	C						A	R	C	I	C				
Test configuration			I	C							A	R		C				
Refine configuration (City Responsible)			I	C							A	R		C				
Refine configuration (Tyler Responsible)			A	R							I	I		I				
Validate interface process and results			I	C			C				A	R		C			C	
Update City-specific process documentation (if applicable)			I	C							A	R		C				
Updates to Solution Validation testing plan			C	C							A	R		C			C	

Inputs	Initial Configuration
	Documentation that describes future state decisions and configuration options to support future state decisions.
	Solution validation test plan

Outputs / Deliverables		Acceptance Criteria [only] for Deliverables
	Updated solution validation test plan	
	Completed City-specific process documentation (completed by City)	

Work package assumptions:

- None

6.3.4 Conversion Delivery

The purpose of this task is to transition the City's data from their source ("legacy") system(s) to the Tyler system(s). The data will need to be mapped from the legacy system into the new Tyler system format. A well-executed data conversion is key to a successful cutover to the new system(s).

With guidance from Tyler, the City will review specific data elements within the system and identify / report discrepancies. Iteratively, Tyler will collaborate with the City to address conversion discrepancies. This process will allow for clean, reconciled data to transfer from the source system(s) to the Tyler system(s). Reference Conversion Appendix for additional detail.

Objectives:

- Data is ready for production (Conversion).

STAGE 3	Data Delivery & Conversion																
	Tyler								City								
RACI MATRIX KEY: R = Responsible A = Accountable C = Consulted I = Informed	Executive Manager	Implementation Manager	Project Manager	Implementation Consultant	Data Experts	Modification Services	Technical Services	Client Services	Executive Sponsor	Steering Committee	Project Manager	Functional Leads	Change Management Leads	Subject Matter Experts (Power	Department Heads	End Users	Technical Leads
Provide data crosswalks/code mapping tool			A	C	R						I	I		I			
Populate data crosswalks/code mapping tool			I	C	C						A	R		C			
Iterations: Conversion Development			A	C	R						I						I
Iterations: Deliver converted data			A		R		I				I						I
Iterations: Proof/Review data and			C	C	C						A	R		C			C

reconcile to source system	

Inputs	
	Data Conversion Plan
	Configuration

Outputs / Deliverables		Acceptance Criteria [only] for Deliverables
	Code Mapping Complete / Validated	N/A
	Conversion Iterations / Reviews Complete	Conversion complete, verified, and ready for final pass

Work package assumptions:

- The City will provide a single file layout per source system as identified in the investment summary.
- The City subject matter experts and resources most familiar with the current data will be involved in the data conversion effort.
- The City project team will be responsible for completing the code mapping activity, with assistance from Tyler.

6.3.5 Intentionally left blank.

6.3.6 Intentionally left blank.

6.3.7 Control Point 3: Prepare Solution Stage Acceptance

Acceptance criteria for this Stage includes all criteria listed below in each Work Package.

Note: Advancement to the Production Readiness Stage is dependent upon Tyler's receipt of the Stage Acceptance.

Prepare Solution Stage Deliverables:

- Licensed software is installed.
- Installation checklist/system document.
- Updated solution design document (Data & Insights only).
- Prioritized data sets for review in Tyler system (Data & Insights only).
- Conversion iterations and reviews complete.

Prepare Solution Stage Acceptance Criteria:

- All stage deliverables accepted based on criteria previously defined.
- Software is configured.
- Solution validation test plan has been reviewed and updated if needed.

6.4 Production Readiness

Activities in the Production Readiness stage will prepare the City team for go-live through solution validation, the development of a detailed go-live plan and end user training. A readiness assessment will be conducted with the City to review the status of the project and the organizations readiness for go-live.

6.4.1 Solution Validation

Solution Validation is the end-to-end software testing activity to ensure that the City verifies all aspects of the Project (hardware, configuration, business processes, etc.) are functioning properly, and validates that all features and functions per the contract have been deployed for system use.

Objectives:

- Validate that the solution performs as indicated in the solution validation plan.
- Ensure the City organization is ready to move forward with go-live and training (if applicable).

STAGE 4	Solution Validation																
	Tyler								City								
RACI MATRIX KEY: R = Responsible A = Accountable C = Consulted I = Informed	Executive Manager	Implementation Manager	Project Manager	Implementation Consultant	Data Experts	Modification Services	Technical Services	Client Services	Executive Sponsor	Steering Committee	Project Manager	Functional Leads	Change Management Leads	Subject Matter Experts (Power	Department Heads	End Users	Technical Leads
Update Solution Validation plan			A	R	C						C	C		C			
Update test scripts (as applicable)			C	C	C						A	R		C			
Perform testing			C	C	C						A	R		C			
Document issues from testing			C	C	C						A	R		C			
Perform required follow-up on issues			A	R	C						C	C		C			

Inputs	Solution Validation plan
	Completed work product from prior stages (configuration, business process, etc.)

Outputs / Deliverables		Acceptance Criteria [only] for Deliverables
	Solution Validation Report	City updates report with testing results

Work package assumptions:

- Designated testing environment has been established.

- Testing includes current phase activities or deliverables only.

6.4.2 Go-Live Readiness

Tyler and the City will ensure that all requirements defined in Project planning have been completed and the Go-Live event can occur, as planned. A go-live readiness assessment will be completed identifying risks or actions items to be addressed to ensure the City has considered its ability to successfully Go-Live. Issues and concerns will be discussed, and mitigation options documented. Tyler and the City will jointly agree to move forward with transition to production. Expectations for final preparation and critical dates for the weeks leading into and during the Go-Live week will be planned in detail and communicated to Project teams.

Objectives:

- Action plan for go-live established.
- Assess go-live readiness.
- Stakeholders informed of go-live activities.

STAGE 4	Go-Live Readiness																
	Tyler								City								
RACI MATRIX KEY: R = Responsible A = Accountable C = Consulted I = Informed	Executive Manager	Implementation Manager	Project Manager	Implementation Consultant	Data Experts	Modification Services	Technical Services	Client Services	Executive Sponsor	Steering Committee	Project Manager	Functional Leads	Change Management Leads	Subject Matter Experts (Power	Department Heads	End Users	Technical Leads
Perform Readiness Assessment	I	A	R	C	C	I	C	I	I	I	I		I				I
Conduct Go-Live planning session		A	R	C							C	C	C	C	C		C
Order peripheral hardware (if applicable)			I							A	R						C
Confirm procedures for Go-Live issue reporting & resolution		A	R	I	I	I	I				C	C	I	I	I	I	I
Develop Go-Live checklist		A	R	C	C						C	C	I	C			C
Final system infrastructure review (where applicable)			A				R				C						C

Inputs	Future state decisions
	Go-live checklist

Outputs / Deliverables		Acceptance Criteria [only] for Deliverables
	Updated go-live checklist	Updated Action plan and Checklist for go-live delivered to the City

Work package assumptions:

- None

6.4.3 End User Training

End User Training is a critical part of any successful software implementation. Using a training plan previously reviewed and approved, the Project team will organize and initiate the training activities.

Train the Trainer: Tyler provides one occurrence of each scheduled training or implementation topic. City users who attended the Tyler sessions may train additional users. Additional Tyler led sessions may be contracted at the applicable rates for training.

Tyler will provide standard application documentation for the general use of the software. It is not Tyler's responsibility to develop City specific business process documentation. City-led training labs using City specific business process documentation if created by the City can be added to the regular training curriculum, enhancing the training experiences of the end users.

Objectives:

- End users are trained on how to use the software prior to go-live.
- The City is prepared for on-going training and support of the application.

STAGE 4	End User Training																
	Tyler								City								
RACI MATRIX KEY: R = Responsible A = Accountable C = Consulted I = Informed	Executive Manager	Implementation Manager	Project Manager	Implementation Consultant	Data Experts	Modification Services	Technical Services	Client Services	Executive Sponsor	Steering Committee	Project Manager	Functional Leads	Change Management Leads	Subject Matter Experts (Power	Department Heads	End Users	Technical Leads
Update training plan		A	R	C							C		I		C		
End User training (Tyler-led)		A	R	C							C	C	I	C	C	C	
Train-the-trainer		A	R	C							C	C	I	C			
End User training (City-led)			C	C							A	R	I	C	C	C	

Inputs	Training Plan
	List of End Users and their Roles / Job Duties
	Configured Tyler System

Outputs / Deliverables		Acceptance Criteria [only] for Deliverables
	End User Training	City signoff that training was delivered

Work package assumptions:

- The City project team will work with Tyler to jointly develop a training curriculum that identifies the size, makeup, and subject-area of each of the training classes.
- Tyler will work with the City as much as possible to provide end-user training in a manner that minimizes the impact to the daily operations of City departments.
- The City will be responsible for training new users after go-live (exception—previously planned or regular training offerings by Tyler).

6.4.4 Control Point 4: Production Readiness Stage Acceptance

Acceptance criteria for this stage includes all criteria listed below. Advancement to the Production stage is dependent upon Tyler's receipt of the stage acceptance.

Production Readiness stage deliverables:

- Solution Validation Report.
- Update go-live action plan and checklist.
- End user training.

Production Readiness stage acceptance criteria:

- All stage deliverables accepted based on criteria previously defined.
- Go-Live planning session conducted.

6.5 Production

Following end user training the production system will be fully enabled and made ready for daily operational use as of the scheduled date. Tyler and the City will follow the comprehensive action plan laid out during Go-Live Readiness to support go-live activities and minimize risk to the Project during go-live. Following go-live, Tyler will work with the City to verify that implementation work is concluded, post go-live activities are scheduled, and the transition to Client Services is complete for long-term operations and maintenance of the Tyler software.

6.5.1 Go-Live

Following the action plan for Go-Live, defined in the Production Readiness stage, the City and Tyler will complete work assigned to prepare for Go-Live.

The City provides final data extract and Reports from the Legacy System for data conversion and Tyler executes final conversion iteration, if applicable. If defined in the action plan, the City manually enters any data added to the Legacy System after final data extract into the Tyler system.

Tyler staff collaborates with the City during Go-Live activities. The City transitions to Tyler software for day-to day business processing.

Some training topics are better addressed following Go-Live when additional data is available in the system or based on timing of applicable business processes and will be scheduled following Go-Live per the Project Schedule.

Objectives:

- Execute day to day processing in Tyler software.

- City data available in Production environment.

STAGE 5	Go-Live																
	Tyler								City								
RACI MATRIX KEY: R = Responsible A = Accountable C = Consulted I = Informed	Executive Manager	Implementation Manager	Project Manager	Implementation Consultant	Data Experts	Modification Services	Technical Services	Client Services	Executive Sponsor	Steering Committee	Project Manager	Functional Leads	Change Management Leads	Subject Matter Experts (Power	Department Heads	End Users	Technical Leads
Provide final source data extract, if applicable			C		C						A						R
Final source data pushed into production environment, if applicable			A	C	R						I	C		C			C
Proof final converted data, if applicable			C	C	C						A	R		C			
Complete Go-Live activities as defined in the Go-Live action plan			C	C	C					A	R	C	I	C			
Provide Go-Live assistance			A	R	C	C		I			C	C	I	C		I	C

Inputs	Comprehensive Action Plan for Go-Live
	Final source data (if applicable)

Outputs / Deliverables		Acceptance Criteria [only] for Deliverables
	Data is available in production environment	City confirms data is available in production environment

Work package assumptions:

- The City will complete activities documented in the action plan for Go-Live as scheduled.
- External stakeholders will be available to assist in supporting the interfaces associated with the Go-Live live process.
- The City business processes required for Go-Live are fully documented and tested.
- The City Project team and subject matter experts are the primary point of contact for the end users when reporting issues during Go-Live.
- The City Project Team and Power User's provide business process context to the end users during Go-Live.
- The Tyler Go-Live support team is available to consult with the City teams as necessary.
- The Tyler Go-Live support team provides standard functionality responses, which may not be tailored to the local business processes.

6.5.2 Transition to Client Services

This work package signals the conclusion of implementation activities for the Phase or Project with the exception of agreed-upon post Go-Live activities. The Tyler project manager(s) schedules a formal transition of the City onto the Tyler Client Services team, who provides the City with assistance following Go-Live, officially transitioning the City to operations and maintenance.

Objectives:

- Ensure no critical issues remain for the project teams to resolve.
- Confirm proper knowledge transfer to the City teams for key processes and subject areas.

STAGE 5	Transition to Client Services																
	Tyler								City								
RACI MATRIX KEY: R = Responsible A = Accountable C = Consulted I = Informed	Executive Manager	Implementation Manager	Project Manager	Implementation Consultant	Data Experts	Modification Services	Technical Services	Client Services	Executive Sponsor	Steering Committee	Project Manager	Functional Leads	Change Management Leads	Subject Matter Experts (Power	Department Heads	End Users	Technical Leads
Transfer City to Client Services and review issue reporting and resolution processes	I	I	A	I	I			R	I	I	C	C		C			
Review long term maintenance and continuous improvement			A					R			C	C		C			

Inputs	Open item/issues List

Outputs / Deliverables		Acceptance Criteria [only] for Deliverables
	Client Services Support Document	

Work package assumptions:

- No material project issues remain without assignment and plan.

6.5.3 Post Go-Live Activities

Some implementation activities are provided post-production due to the timing of business processes, the requirement of actual production data to complete the activities, or the requirement of the system being used in a live production state.

Objectives:

- Schedule activities that are planned for after Go-Live.
- Ensure issues have been resolved or are planned for resolution before phase or project close.

STAGE 5	Post Go-Live Activities															
	Tyler								City							
RACI MATRIX KEY: R = Responsible A = Accountable C = Consulted I = Informed	Executive Manager	Implementation Manager	Project Manager	Implementation Consultant	Data Experts	Modification Services	Technical Services	Client Services	Executive Sponsor	Steering Committee	Project Manager	Functional Leads	Change Management Leads	Subject Matter Experts (Power	Department Heads	End Users	Technical Leads
Schedule contracted activities that are planned for delivery after go-live		A	R	C	C	C	C	I			C	C	I	C			C
Determine resolution plan in preparation for phase or project close out		A	R	C	C	C		I			C	C	I	C			

Inputs	List of post Go-Live activities

Outputs / Deliverables		Acceptance Criteria [only] for Deliverables
	Updated issues log	

Work package assumptions:

- System is being used in a live production state.

6.5.4 Control Point 5: Production Stage Acceptance

Acceptance criteria for this Stage includes completion of all criteria listed below:

- Advancement to the Close stage is not dependent upon Tyler's receipt of this Stage Acceptance.
- Converted data is available in production environment.

Production Stage Acceptance Criteria:

- All stage deliverables accepted based on criteria previously defined.
- Go-Live activities defined in the Go-Live action plan completed.
- Client services support document is provided.

6.6 Close

The Close stage signifies full implementation of all products purchased and encompassed in the Phase or Project. The City transitions to the next cycle of their relationship with Tyler (next Phase of implementation or long-term relationship with Tyler Client Services).

6.6.1 Phase Closeout

This work package represents Phase completion and signals the conclusion of implementation activities for the Phase. The Tyler Client Services team will assume ongoing support of the City for systems implemented in the Phase.

Objectives:

- Agreement from Tyler and the City teams that activities within this phase are complete.

STAGE 6	Phase Close Out																
	Tyler								City								
RACI MATRIX KEY: R = Responsible A = Accountable C = Consulted I = Informed	Executive Manager	Implementation Manager	Project Manager	Implementation Consultant	Data Experts	Modification Services	Technical Services	Client Services	Executive Sponsor	Steering Committee	Project Manager	Functional Leads	Change Management Leads	Subject Matter Experts (Power	Department Heads	End Users	Technical Leads
Reconcile project budget and status of contract Deliverables	I	A	R						I	I	C						
Hold post phase review meeting		A	R	C	C	C	C				C	C	C	C			C
Release phase-dependent Tyler project resources	A	R	I								I						

Participants	Tyler	City
	Project Leadership	Project Manager
	Project Manager	Project Sponsor(s)
	Implementation Consultants	Functional Leads, Power Users, Technical Leads
	Technical Consultants (Conversion, Deployment, Development)	
	Client Services	

Inputs	Contract
	Statement of Work
	Project artifacts

Outputs / Deliverables		Acceptance Criteria [only] for Deliverables
	Final action plan (for outstanding items)	
	Reconciliation Report	
	Post Phase Review	

Work package assumptions:

- Tyler deliverables for the phase have been completed.

6.6.2 Project Closeout

Completion of this work package signifies final acceptance and formal closing of the Project.

At this time the City may choose to begin working with Client Services to look at continuous improvement Projects, building on the completed solution.

Objectives:

- Confirm no critical issues remain for the project teams to resolve.
- Determine proper knowledge transfer to the City teams for key processes and subject areas has occurred.
- Verify all deliverables included in the Agreement are delivered.

STAGE 6	Project Close Out																
	Tyler								City								
RACI MATRIX KEY: R = Responsible A = Accountable C = Consulted I = Informed	Executive Manager	Implementation Manager	Project Manager	Implementation Consultant	Data Experts	Modification Services	Technical Services	Client Services	Executive Sponsor	Steering Committee	Project Manager	Functional Leads	Change Management Leads	Subject Matter Experts (Power	Department Heads	End Users	Technical Leads
Conduct post project review		A	R	C	C	C	C				C	C	C	C			C
Deliver post project report to City and Tyler leadership	I	A	R						I	I	C						
Release Tyler project resources	A	R	I								I						

Inputs	Contract
	Statement of Work

Outputs / Deliverables		Acceptance Criteria [only] for Deliverables

	Post Project Report	City acceptance: Completed report indicating all project Deliverables and milestones have been completed

Work package assumptions:

- All project implementation activities have been completed and approved.
- No critical project issues remain that have not been documented and assigned.
- Final project budget has been reconciled and invoiced.
- All Tyler deliverables have been completed.

6.6.3 Control Point 6: Close Stage Acceptance

Acceptance criteria for this Stage includes completion of all criteria listed below.

Close Stage Deliverables:

- Post Project Report.

Close Stage Acceptance Criteria:

- Completed report indicating all Project deliverables and milestones have been completed.

7. General Assumptions

Tyler and the City will use this SOW as a guide for managing the implementation of the Tyler Project as provided and described in the Agreement. There are a few assumptions which, when acknowledged and adhered to, will support a successful implementation. Assumptions related to specific work packages are documented throughout the SOW. Included here are general assumptions which should be considered throughout the overall implementation process.

7.1 Project

- Project activities will begin after the Agreement has been fully executed.
- The City Project Team will complete their necessary assignments in a mutually agreed upon timeframe to meet the scheduled go-live date, as outlined in the Project Schedule.
- Sessions will be scheduled and conducted at a mutually agreeable time.
- Additional services, software modules and modifications not described in the SOW or Agreement will be considered a change to this Project and will require a Change Request Form as previously referenced in the definition of the Change Control Process.
- Tyler will provide a written agenda and notice of any prerequisites to the City project manager(s) ten (10) business days or as otherwise mutually agreed upon time frame prior to any scheduled on-site or remote sessions, as applicable.
- Tyler will provide guidance for configuration and processing options available within the Tyler software. If multiple options are presented by Tyler, the City is responsible for making decisions based on the options available.
- Implementation of new software may require changes to existing processes, both business and technical, requiring the City to make process changes.

DocuSign Envelope ID: 253EBE9E-E967-4F83-973A-E95AFF34768C

- The City is responsible for defining, documenting, and implementing their policies that result from any business process changes.

7.2 Organizational Change Management

Unless otherwise contracted by Tyler, City is responsible for managing Organizational Change. Impacted City resources will need consistent coaching and reassurance from their leadership team to embrace and accept the changes being imposed by the move to new software. An important part of change is ensuring that impacted City resources understand the value of the change, and why they are being asked to change.

7.3 Resources and Scheduling

- City resources will participate in scheduled activities as assigned in the Project Schedule.
- The City team will complete prerequisites prior to applicable scheduled activities. Failure to do so may affect the schedule.
- Tyler and the City will provide resources to support the efforts to complete the Project as scheduled and within the constraints of the Project budget.
- Abbreviated timelines and overlapped Phases require sufficient resources to complete all required work as scheduled.
- Changes to the Project Schedule, availability of resources or changes in Scope will be requested through a Change Request. Impacts to the triple constraints (scope, budget, and schedule) will be assessed and documented as part of the change control process.
- The City will ensure assigned resources will follow the change control process and possess the required business knowledge to complete their assigned tasks successfully. Should there be a change in resources, the replacement resource should have a comparable level of availability, change control process buy-in, and knowledge.
- The City makes timely Project related decisions to achieve scheduled due dates on tasks and prepare for subsequent training sessions. Failure to do so may affect the schedule, as each analysis and implementation session is dependent on the decisions made in prior sessions.
- The City will respond to information requests in a comprehensive and timely manner, in accordance with the Project Schedule.
- The City will provide adequate meeting space or facilities, including appropriate system connectivity, to the project teams including Tyler team members.
- For on-site visits, Tyler will identify a travel schedule that balances the needs of the project and the employee.

7.4 Data

- Data will be converted as provided and Tyler will not create data that does not exist.
- The City is responsible for the quality of legacy data and for cleaning or scrubbing erroneous legacy data.
- Tyler will work closely with the City representatives to identify business rules before writing the conversion. The City must confirm that all known data mapping from source to target have been identified and documented before Tyler writes the conversion.
- All in-scope source data is in data extract(s).
- Each legacy system data file submitted for conversion includes all associated records in a single approved file layout.

- The City will provide the legacy system data extract in the same format for each iteration unless changes are mutually agreed upon in advance. If not, negative impacts to the schedule, budget and resource availability may occur and/or data in the new system may be incorrect.
- The City Project Team is responsible for reviewing the converted data and reporting issues during each iteration, with assistance from Tyler.
- The City is responsible for providing or entering test data (e.g., data for training, testing interfaces, etc.)

7.5 Facilities

- The City will provide dedicated space for Tyler staff to work with City resources for both on-site and remote sessions. If Phases overlap, City will provide multiple training facilities to allow for independent sessions scheduling without conflict.
- The City will provide staff with a location to practice what they have learned without distraction.

DocuSign Envelope ID: 253EBE9E-E967-4F83-973A-E95AFF34768C

8. Glossary

Word or Term	Definition
Acceptance	Confirming that the output or deliverable is suitable and conforms to the agreed upon criteria.
Accountable	The one who ultimately ensures a task or deliverable is completed; the one who ensures the prerequisites of the task are met and who delegates the work to those responsible. [Also see RACI]
Application	A computer program designed to perform a group of coordinated functions, tasks, or activities for the benefit of the user.
Application Programming Interface (API)	A defined set of tools/methods to pass data to and received data from Tyler software products
Agreement	This executed legal contract that defines the products and services to be implemented or performed.
Business Process	The practices, policy, procedure, guidelines, or functionality that the client uses to complete a specific job function.
Business Requirements Document	A specification document used to describe Client requirements for contracted software modifications.
Change Request	A form used as part of the Change Control process whereby changes in the scope of work, timeline, resources, and/or budget are documented and agreed upon by participating parties.
Change Management	Guides how we prepare, equip and support individuals to successfully adopt change in order to drive organizational success & outcomes
Code Mapping [where applicable]	An activity that occurs during the data conversion process whereby users equate data (field level) values from the old system to the values available in the new system. These may be one to one or many to one. Example: Old System [Field = eye color] [values = BL, Blu, Blue] maps to New Tyler System [Field = Eye Color] [value = Blue].
Consulted	Those whose opinions are sought, typically subject matter experts, and with whom there is two-way communication. [Also see RACI]
Control Point	This activity occurs at the end of each stage and serves as a formal and intentional opportunity to review stage deliverables and required acceptance criteria for the stage have been met.
Data Mapping [where applicable]	The activity determining and documenting where data from the legacy system will be placed in the new system; this typically involves prior data analysis to understand how the data is currently used in the legacy system and how it will be used in the new system.
Deliverable	A verifiable document or service produced as part of the Project, as defined in the work packages.
Go-Live	The point in time when the Client is using the Tyler software to conduct daily operations in Production.
Informed	Those who are kept up to date on progress, often only on completion of the task or deliverable, and with whom there is just one-way communication. [Also see RACI]

Infrastructure	The composite hardware, network resources and services required for the existence, operation, and management of the Tyler software.
Interface	A connection to and potential exchange of data with an external system or application. Interfaces may be one way, with data leaving the Tyler system to another system or data entering Tyler from another system, or they may be bi-directional with data both leaving and entering Tyler and another system.
Integration	A standard exchange or sharing of common data within the Tyler system or between Tyler applications
Legacy System	The software from which a client is converting.
Modification	Custom enhancement of Tyler's existing software to provide features or functions to meet individual client requirements documented within the scope of the Agreement.
On-site	Indicates the work location is at one or more of the client's physical office or work environments.
Organizational Change	The process of changing an organization's strategies, processes, procedures, technologies, and culture, as well as the effect of such changes on the organization.
Output	A product, result or service generated by a process.
Peripheral devices	An auxiliary device that connects to and works with the computer in some way. Some examples: scanner, digital camera, printer.
Phase	A portion of the Project in which specific set of related applications are typically implemented. Phases each have an independent start, Go-Live and closure dates but use the same Implementation Plans as other Phases of the Project. Phases may overlap or be sequential and may have different Tyler resources assigned.
Project	The delivery of the software and services per the agreement and the Statement of Work. A Project may be broken down into multiple Phases.
RACI	A matrix describing the level of participation by various roles in completing tasks or Deliverables for a Project or process. Individuals or groups are assigned one and only one of the following roles for a given task: Responsible (R), Accountable (A), Consulted (C), or Informed (I).
Remote	Indicates the work location is at one or more of Tyler's physical offices or work environments.
Responsible	Those who ensure a task is completed, either by themselves or delegating to another resource. [Also see RACI]
Scope	Products and services that are included in the Agreement.

DocuSign Envelope ID: 253EBE9E-E967-4F83-973A-E95AFF34768C

Solution	The implementation of the contracted software product(s) resulting in the connected system allowing users to meet Project goals and gain anticipated efficiencies.
Stage	The top-level components of the WBS. Each Stage is repeated for individual Phases of the Project.
Standard	Software functionality that is included in the base software (off-the-shelf) package; is not customized or modified.
Statement of Work (SOW)	Document which will provide supporting detail to the Agreement defining Project-specific activities, services, and Deliverables.
System	The collective group of software and hardware that is used by the organization to conduct business.
Test Scripts	The steps or sequence of steps that will be used to validate or confirm a piece of functionality, configuration, enhancement, or Use Case Scenario.
Training Plan	Document(s) that indicate how and when users of the system will be trained relevant to their role in the implementation or use of the system.
Validation (or to validate)	The process of testing and approving that a specific Deliverable, process, program, or product is working as expected.
Work Breakdown Structure (WBS)	A hierarchical representation of a Project or Phase broken down into smaller, more manageable components.
Work Package	A group of related tasks within a project.

DocuSign Envelope ID: 253EBE9E-E967-4F83-973A-E95AFF34768C

Part 4: Appendices

9. Conversion

9.1 Enterprise Permitting & Licensing Conversion Summary

9.1.1 Community Development

- Permit Master basic information
- Plan Master basic information
- Plan & Permit Contacts
- Unique (keyed) contacts converted to global contacts
- Non-keyed contacts converted to a Memo Custom Field or standard note
- Sub-permit Associations – Visible in Workflow and Attached Records
- Reviews and Approvals
- Projects
- Permit Renewals
- Bonds and Escrow
- Contractors
- Workflow based on configured Enterprise Permitting & Licensing template customized only by inclusion/exclusion based on status, type or class of the associated permit, plan, etc.
- Inspections and Inspection Cases
- Meetings and Hearings
- Activities and Actions
- Conditions
- Fees
- Holds
- Notes
- Parcels and Addresses
- Payments and Fee History
- Zones
- Code Case Master basic information
- Code Requests
- Code Case Contacts and Properties
- Unique (keyed) contacts converted to global contacts
- Non-keyed contacts converted to a Memo Custom Field or standard note
- Violations
- Fees
- Payments
- Notes

9.1.2 Business Management

- Business Entity (Only for Business Licensing)
- License Master basic information
- License Contacts
- Unique (keyed) contacts converted to global contacts

DocuSign Envelope ID: 253EBE9E-E967-4F83-973A-E95AFF34768C

- Non-keyed contacts converted to a Memo Custom Field or standard note
- Reviews and Approvals – Converted to Activity
- Fees
- Bonds and Escrow
- Activities and Actions
- Conditions
- Notes
- Holds
- Workflow based on configured Enterprise Permitting & Licensing template customized only by inclusion/exclusion based on status, type or class of the associated license, code case, etc.
- Contractors
- Business Types and NAICS Codes
- Payment and Fee History
- Code Case Master basic information
- Code Requests
- Code Case Contacts and Properties
- Unique (keyed) contacts converted to global contacts
- Non-keyed contacts converted to a Memo Custom Field or standard note
- Parcels and Addresses
- Meetings and Hearings
- Violations
- Fees
- Payments
- Notes

9.2 Enterprise ERP Conversion Summary

9.2.1 Accounting COA

- Chart of Accounts segments, objects, character codes, project codes (if applicable), organization codes (if applicable), control accounts budget rollups, fund attributes, due to/due from accounts
- Requires the use of a Tyler provided spreadsheet for design and entry of the data to be converted

9.2.2 Accounting - Actuals

- Summary account balances
- Up to 3 years

9.2.3 Accounting - Budgets

- Original budget, budget adjustments, revised budget summaries for accounts
- Up to 3 years

9.2.4 Accounts Payable Master

- Vendor Master file including names, addresses, SSN/FID, contacts, phone numbers
- Multiple remittance addresses
- Year-to-date 1099 amounts

9.2.5 Accounts Payable - Checks

- Check header data including vendor, warrant, check number, check date, overall check amount, GL cash account and clearing information
- Check detail data including related document and invoice numbers for each check
- Up to 5 years

9.2.6 Accounts Payable - Invoices

- Invoice header data containing general information for the invoice
- Invoice detail data containing line-specific information for the invoice
- Up to 5 years

9.2.7 Capital Assets Master

- Asset description, status, acquisition quantity, date and amount, codes for asset class, subclass, department, custodian, flags for capitalization and depreciation, estimated life, serial number, model, model year, depreciation method, life-to-date depreciation amount, last depreciation date, disposal information (if any), purchase information, if any (vendor, PO, Invoice)

9.2.8 General Billing CID

- Customer information

9.2.9 General Billing – Recurring Invoices

- General Billing Invoices that are sent on a regular basis
- Header records with general information about the invoice
- Detail records with line-specific information

9.2.10 General Billing – Bills

- 5 years of open and closed invoices
- General Ledger information so open invoices can be processed in Enterprise ERP

9.2.11 Project Grant Accounting

- Segments, account strings and fund string allocation table
- Requires the use of a Tyler provided (Chart of Accounts) spreadsheet for design and entry of the data to be converted

9.2.12 Project Grant Accounting - Actuals

- Summary project ledger string balances. If linking to GL, must be converted at the same time.
- Up to 3 years

9.2.13 Project Grant Accounting – Budget

- Original project ledger budget amounts. If linking to GL, must be converted at the same time.
- Up to 3 years

DocuSign Envelope ID: 253EBE9E-E967-4F83-973A-E95AFF34768C

9.2.14 Purchase Orders

- Open purchase orders header data including vendor, buyer, date, accounting information, etc.
- Open purchase orders detail data including line-item descriptions, quantities, amounts, etc.

9.2.15 Payroll

- Payroll Employee Master data including data such as name, address, SSN, legacy employee ID, date of birth, hire date, activity status (such as active/inactive), leave/termination code and date, phone(s), e-address, marital status, gender, race, personnel status (such as full-time, part-time, etc.), highest degree, advice-delivery (print/email/both) and check location, plus primary group, job, location, and account information

9.2.16 Payroll - Deductions

- Employee Deductions - including employee ID, deduction codes, tax information, and direct deposit information

9.2.17 Payroll – Accrual Balances

- Employee Accrual Balances including Vacation, Holiday, and other Leave balances
- Start of year balance, earned to date, used to date

9.2.18 Payroll – Accumulators

- YTD, QTD, MTD amounts for employee pay and deductions
- Needed for mid-calendar-year go-live
- May not be needed if converting earnings/deductions history
- Up to 5 years

9.2.19 Payroll – Check History

- Up to 5 years, additional years must be quoted. We convert amounts for earnings and deductions in employee check history, check number and date.

9.2.20 Payroll – State Retirement Tables

- Specific state-required data, plus related service years information, when appropriate
- Needed for some states

10. Additional Appendices

10.1 Enterprise Permitting & Licensing Definitions

10.1.1 "Template Business Transactions"

- A pre-defined and pre-configured Enterprise Permitting & Licensing business process from Enterprise Permitting & Licensing's "Best Management Template".
- The following modifications to Template Business Transactions are considered within scope:
  - Any changes to required inspections within the workflow
  - Any changes to the required plan reviews within the workflow
  - Adding up to 2 additional actions to the workflow
  - Configuration of fees, allowing creation of up to 3 new fees to accommodate
  - Any changes to custom field layouts that are directly related to fees or included reports
- Customization/Configuration of any of these parameters beyond the scope listed above will require the respective business process to be considered a "Unique Business Transaction", as described below.

Note: All transaction counts are quantified in the comments of the Investment Summary.

10.1.2 "Unique Business Transactions"

- Unique configuration of workflow or business process steps & actions, including output actions
- Unique Fee configuration
- Unique Custom field configuration

10.1.3 "Geo-Rules"

- An automation event that references GIS data. Current geo-rule action types are:

Alert	Displays a pop-up with a custom message to the user, notifying them of certain spatial data (i.e., noise abatement zones; flood zones; etc.).
Block	Places a block on the case and prevents any progress or updates from occurring on the record (i.e., no status changes can be completed, no fees can be paid, the workflow cannot be managed, etc.)
Block with Override	Places a block on the case and prevents any progress or updates from occurring on the record (i.e., no status changes can be completed, no fees can be paid, the workflow cannot be managed, etc.) However, the block can be overridden by end-users who have been given the proper securities.
Fee Date	Populates the CPI vesting date on the record if vesting maps are used by the jurisdiction.
Field Mapping	A custom field or any field inherent in the Enterprise Permitting & Licensing application can automatically populate with information based on spatial data.
Required Action	A workflow action can automatically populate in the workflow details for the particular record (i.e., plan, permit, code case, etc.) that requires the action based on certain spatial data related to the case.
Required Step	A workflow step can automatically populate in the workflow details for the particular record (i.e., plan, permit, code case, etc.) that requires the step based on certain spatial data related to the case.
Zone Mapping	The zone(s) automatically populate on the "Zones" tab of the record (i.e., plan, permit, code case, etc.).

10.1.4 "Automation Events"

10.1.4.1 "Intelligent Objects (IO)"

- Key components for automatically and reactively triggering geo-rules, computing fees, and generating emails, alerts, and other notifications.

10.1.4.2 "Intelligent Automation Agents (IAA)"

- A tool designed to automate task in a proactive manner by setting values and generating emails and other tasks. On a nightly basis, a Windows service sweeps the Enterprise Permitting & Licensing system looking for IAA tasks that need to be run, then the associated actions are performed. The IAA does not generate alerts or errors. Custom SQL queries are not Tyler deliverables.

10.1.5 "Enterprise Permitting & Licensing SDK/API (Toolkits)"

- APIs developed by Tyler Technologies for extending the Enterprise Permitting & Licensing Framework and functionality to external agencies and systems. Full documentation is available for each toolkit upon request.

Note: The Enterprise Permitting & Licensing toolkits and related documentation are simply tools that allow clients to create applications and integrations. The purchase of a toolkit/API does not imply any development related services from Tyler Technologies. The City is responsible for working with their IT staff and VARs to develop any necessary applications and integrations except as otherwise noted in the Investment Summary or for any "in-scope" integrations.

10.2 Koa Hills Services

Historical Archive Database Scope of Work

Introduction

Koa Hills Consulting (KHC) will deliver a web-based data archival system to maintain access to historical data in addition to the data that is converted directly to Munis. This includes information that is not typically converted into Munis, such as closed purchase orders or inactive vendors, as well as additional years of historical data that the client needs. The build out of the historical archive database uses the same Munis data conversion templates and mappings created during the implementation process. Users will be able to access an intuitive web-based application which looks and feels like the Munis Central applications in order to retrieve historical information.

The historical information includes the following areas of data:

- General Ledger
- Projects
- Budgets
- Vendors
- Accounts Payable Checks

- Accounts Payable Invoices
- Purchase Orders
- Contracts

Application Features

The historical archive database is a web-based module which provides menu driven access to a series of screens and reports designed for user access. The web front end is very similar in nature to the inquiry options within Munis to provide users with a familiar and intuitive interface. The screens provide the ability to perform advanced searches and return data which may then be viewed and exported to Excel, if needed.

The following screens will be available within the historical archive database. Information on these screens will correlate with the Munis screens whenever possible; however, certain pieces of information which would become stale over time are omitted. All data available through the Munis Conversion programs have the opportunity for inclusion in the historical archive database.

Screen	Description
Account Central	All related financial activity for a given Munis GL
Journal Entries	
Project Central	All related financial activity for a given Munis GL Organization, Object and Project including budget, actual and encumbrance data.
Budget Central	
Invoice Central	AP Invoice information with associated purchase orders and payment details.
Checks Central	
Purchase Orders	Purchase order and line-item detail with associated AP Invoices.
Contracts Central	Contract information with associated AP Invoices and Purchase Orders.
Vendor Central	All related financial activity for a vendor, and drill down into the detail in: Checks, Invoices, Purchase Order, Contracts.
Finance Codes	
Finance Reports	

The following reports will be available within the historical archive database. Information on these reports will correlate with the Munis screens whenever possible; however, certain pieces of information which would become stale over time are omitted. All data available through the Munis Conversion programs have the opportunity for inclusion in the historical archive database.

Report	Description
Accounts, Project Central	All related financial activity for a given Munis GL Organization, Object and Project including budget, actual and encumbrance data.
Vendor Central	All related financial activity for a vendor, and drill down into the detail in: Checks, Invoices, Purchase Order, Contracts.
Purchasing Central	Purchase order and line-item detail with associated AP Invoices.
Contracts Central	Contract information with associated AP Invoices and Purchase Orders.
Invoice Central	AP Invoice information with associated purchase orders and payment details.

- Reports will be provided in SSRS
- Customer can develop additional reports in SSRS
- KHC can develop additional reports for the client by request and for an additional cost

Deliverables

The following deliverables will be provided with the solution:

- Web based application to access historical data
- Training to use the historical data application
- KHC will assist client in converting and populating data input spreadsheets to match mapping requirements
- Data conversion templates for mapping
  - KHC will use the same mapping spreadsheets as the Munis Data Conversion Team
- Historical data will be converted into the database using the Munis data structure

Client Responsibilities

- Client shall provide access to fulfill the necessary requirements to historical data files, data mapping expertise and any other necessary information to facilitate the archival process
- Client shall furnish legacy system documentation for data mapping, as needed
- Client shall furnish the required hardware to run the archival system unless the client chooses the SaaS option
- Client shall provide necessary access to the client internal network for installation and configuration if needed
- Client shall provide GL Account Crosswalk mapping for any legacy accounts which are desired to maintain for all years archived with the new updated Munis format
- Client shall assist with data validation and testing by running reports comparing totals and details on legacy data between systems

Hardware Requirements

If not using the KHC SaaS solution, the client will supply the stand-alone server with a recent version of Windows Server Operating System, SQL server, SSRS, and the Management Studio package. Though the

server is read only, Koa Hills recommends a duplicate hard drive backup to cover disasters and possible drive failures. Koa Hills will create a schema which closely matches that of Munis data migration for each sub-system.

Assumptions

- The server will be designed for administrative access only and there will be no layered user security.
- Data is consistent for all years. If the data has changed (ex. COA length changed at some point in the past and is different from the current data structure in Munis), then additional professional services may be required.
- Legacy system data will be converted from a single source. If there are multiple legacy systems, then additional professional services may be required.
- All work will be performed remotely. Travel costs are not included and will be billed as incurred if travel is required.

DocuSign Envelope ID: 253EBE9E-E967-4F83-973A-E95AFF34768C

11. Project Timeline

11.1 ERP Project Timeline

The Project Timeline establishes a target start and end date for each Phase of the Project. The timeline needs to account for resource availability, business goals, size and complexity of the Project, and task duration requirements. These will be reviewed and adjusted, if needed, during the Initiate and Plan Stage. Refer to the Project Stages section of this SOW for information on work packages associated with each stage of the implementation.

The following dates may be revised based on the date the Agreement is signed and further refined during the course of the project. Tyler requires up to forty-five (45) days to move from Agreement signing to the Initiate & Plan Stage.

PROJECT TIMELINE

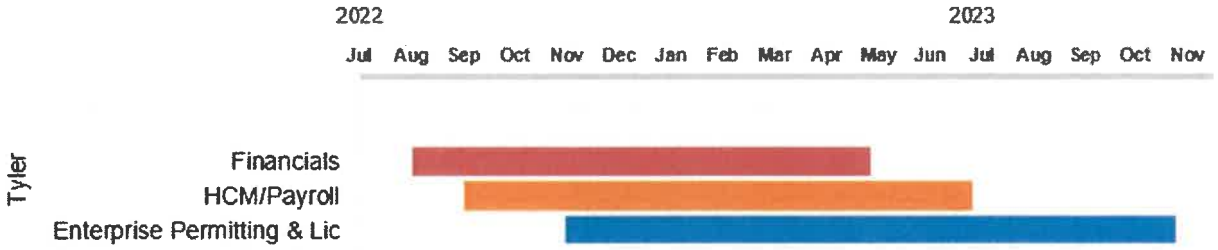

**If phase overlap is a concern for resource availability, some modules listed in the Financials phase can be postponed until a later time. Allowing the core financial elements to be implemented first will increase the success of the overall ERP project.

Phase	Functional Area(s)	Modules	Start Date	Go-Live Date
1	**Financials**	• Accounting/General Ledger • Accounts Payable • BMI Asset Track Interface • Budgeting • Capital Assets • Cash Management • Contract Management • eProcurement • General Billing • Purchasing • Project & Grant Accounting • Accounts Receivable • Cashiering • General Billing	Aug 2022 or as defined in the Project Plan and mutually agreed upon	May 2023 or as defined in the Project Plan and mutually agreed upon
2	**Human Capital Management**	• Payroll w/ ESS • Human Resources & Talent Management • Recruiting • Risk Management	Sept 2022 or as defined in the Project Plan and mutually agreed upon	July 2023 or as defined in the Project Plan and mutually agreed upon
	System Wide	• Enterprise Analytics & Reporting • Enterprise Forms Processing • Content Manager Core • Executive Insights[1]		
3	**Enterprise Permitting and Licensing**	• Business Management Suite • Community Development Suite • Civic Access-Bus Mgt • Civic Access-Comm Dev • E-reviews • Enterprise Permitting & Licensing • Enterprise Service Requests • My Civic • Report Toolkit • Workforce Mobile • GIS	Nov 2022 or as defined in the Project Plan and mutually agreed upon	Nov 2023 or as defined in the Project Plan and mutually agreed upon

[1] Executive Insights will be implemented as product suites go live and have data available for reporting.

DocuSign Envelope ID: 253EBE9E-E967-4F83-973A-E95AFF34768C

11.2 Data & Insights Project Plan

Data & Insights Project Plan												
	Week											
	1	2	3	4	5	6	7	8	9	10	11	12
Initiate and Plan												
Assess and Define												
Prepare Solution												
Production Readiness												
Production												
Close												

11.3 My Civic Timeline

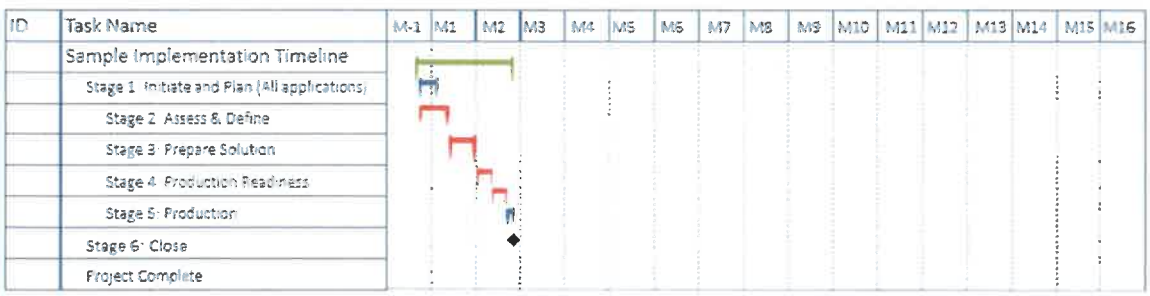

example

This timeline is an example. Please use it as a general guide...ONLY. Its purpose is to demonstrate the order in which various products are typically implemented and the potential overlap of stages for each phase. The exact timing of each deliverable depends on many factors including but not limited to, the client's ability to commit resources to the project client blackout dates and the alignment of client business practices with Tyler implementation methodology. Tyler makes no guarantees that implementation schedules will align with this example.

DocuSign Envelope ID: 253EBE9E-E967-4F83-973A-E95AFF34768C

11.4 Intentionally left blank.

Sponsored by: City Manager

RESOLUTION NO. 22-014

A RESOLUTION OF THE CITY COMMISSION OF THE CITY OF OPA-LOCKA, FLORIDA, AUTHORIZING THE INTERIM CITY MANAGER TO PIGGYBACK THE SOURCEWELL SERVICE AGREEMENT WITH TYLER TECHNOLOGIES, INC. FOR PUBLIC SECTOR AND EDUCATION ADMINISTRATION SOFTWARE SOLUTIONS WITH RELATED SERVICES AND ENTER INTO AN AGREEMENT WITH TYLER TECHNOLOGIES, INC. FOR THE INSTALLATION AND SUPPORT OF THE FIRM'S ENTERPRISE RESOURCE PLANNING (ERP) SYSTEM, IN AN AMOUNT NOT TO EXCEED ONE MILLION, FOUR HUNDRED THIRTY THOUSAND, TWO HUNDRED DOLLARS ($1,430,200.00); PROVIDING FOR INCORPORATION OF RECITALS; PROVIDING FOR AN EFFECTIVE DATE.

WHEREAS, the City of the Opa-Locka's central financial and ancillary functions Information Technology ("IT") system is more than twenty years old and is severely limited in its capability to ensure smooth operations for a Twenty-First Century organization. Modern organizations utilize Enterprise Resource Planning (ERP) Systems that integrate nearly all of an organization's operations into a single seamless IT environment which ensures that any transaction initiated by any department is transmitted throughout the ERP to be available to any other department that has need to make use of the information; and

WHEREAS, the City desires to upgrade its ERP Systems; and

WHEREAS, The Interim City Manager has considered various ERP software developer products and has determined that the Tyler Technologies, Inc. ERP, which has a very significant presence in this technology space, is the system that best meets the City's requirements; and

WHEREAS, on July 16, 2020, Sourcewell issued Request for Proposals 090320 for Public Sector and Education Administration Software Solutions with Related Services to result in a contracting solution for use by its Participating Entities, and subsequently entered into a service agreement with Tyler Technologies, Inc. The contract expires on November 2, 2024; and

WHEREAS, the Interim City Manager recommends the City Commission authorize entering into a five-year contract with Tyler Technologies, Inc. for One Million, Four Hundred Thirty Thousand, Two Hundred Dollars ($1,430,200.00) for the installation and support of Enterprise Resource Planning (ERP) System; and

WHEREAS, the first year will cost $706,200.00, of which $181,000.00 is the annual license and the remainder, $525,200.00, is a one-time installation expense. This latter amount could be reduced somewhat if not all of the support hours included in the contract are required; and

WHEREAS, the City Commission finds that it is in the best interest of the City to piggyback the Sourcewell Agreement with Tyler Technologies, Inc. so the City can benefit from already negotiated rates and enter into the Agreement for the installation and support of Tyler Technologies, Inc.'s Enterprise Resource Planning (ERP) System in an amount of One Million, Four Hundred Thirty Thousand, Two Hundred Dollars ($1,430,200.00) and consistent with Exhibit "A" hereto.

NOW THEREFORE BE IT RESOLVED BY THE CITY COMMISSION OF THE CITY OF OPA LOCKA, FLORIDA:

Section 1. The recitals to the preamble herein are incorporated by reference.

Section 2. The City Commission of the City of Opa-Locka hereby authorizes the City Manager to piggyback the Sourcewell Service Agreement with Tyler Technologies, Inc. for Public Sector and Education Administration Software Solutions with Related Services and enter into an agreement with Tyler Technologies, Inc. for the installation and support of the Enterprise Resource Planning (ERP) System, in an amount not to exceed One Million, Four Hundred Thirty Thousand, Two Hundred Dollars ($1,430,200.00) and consistent with the scope of services to be provided as attached Composite Exhibit "A" hereto.

Section 3. This Resolution shall take effect immediately upon adoption, and is subject to the review of the State of Florida Financial Emergency Oversight Board.

PASSED and **ADOPTED** this 27th day of July, 2022.

Veronica Williams, Mayor

ATTEST:

Joanna Flores, City Clerk

APPROVED AS TO FORM AND LEGAL SUFFICIENCY:

Burnadette Norris-Weeks, P.A.
City Attorney

Moved by: Vice Mayor Taylor

Seconded by: Commissioner Bass

VOTE:	5-0
Commissioner Dominguez	YES
Commissioner Bass	YES
Commissioner Davis	YES
Vice Mayor Taylor	YES
Mayor Williams	YES

City of Opa-locka
Agenda Cover Memo

Department Director:	Lubotes Dauphin			**Department Director Signature:**			
City Manager:	Darvin Williams			**CM Signature:**			
Commission Meeting Date:	*07/27/2022*		**Item Type:** *(Enter X in box)*	**Resolution**	**Ordinance**		**Other**
				X			
Fiscal Impact: *(Enter X in box)*	**Yes**	**No**	**Ordinance Reading:** *(Enter X in box)*		**1st Reading**		**2nd Reading**
	X		**Public Hearing:** *(Enter X in box)*		**Yes**	**No**	**Yes**	**No**
						X		X
Funding Source: *Account#* **:**	*(Enter Fund & Dept.)* Ex: See Financial Impact Section		**Advertising Requirement:** *(Enter X in box)*		**Yes**		**No**
							X
Contract/P.O. Required: *(Enter X in box)*	**Yes**	**No**	**RFP/RFQ/Bid#:**				
	X						
Strategic Plan Related *(Enter X in box)*	**Yes**	**No**	**Strategic Plan Priority Area:**		**Strategic Plan Obj./Strategy:** *(list the specific objective/strategy this item will address)*		
	X		**Enhance Organizational** ■ **Bus. & Economic Dev** ☐ **Public Safety** ☐ **Quality of Education** ☐ **Qual. of Life & City Image** ☐ **Communication** ☐				
Sponsor Name	City Manager		**Department:** Information Technology		City Manager		

Short Title:

ACQUISITION OF AN ENTERPRISE RESOURCE PLANNING (ERP) SYSTEM FROM TYLER TECHNOLOGIES, Inc.

Staff Summary:

The City's central financial and ancillary functions IT system is more than twenty years old and is severely limited in many capabilities a twenty-first century organization utilizes to ensure smooth operations. These organizations utilize Enterprise Resource Planning (ERP) Systems that integrate nearly all of an organization's operations into a single seamless IT environment which ensures that any transaction initiated by any department is transmitted throughout the ERP to be available to any other department that has need to make use of the information.

Staff has considered various ERP software developer products and has determined that the Tyler Technologies, Inc. ERP, which has a very significant presence in this technology space, is the system that best meets the City's requirements.

This contract is based on piggybacking a competitively bid contract awarded by Sourcewell, a governmental national purchasing cooperative.

Financial Impact

This is a five-year contract. The first year will cost $706,200 of which $181,000 is the annual license and the remainder, $525,200, is one-time installation expense. This latter amount could be reduced somewhat if not all of the support hours included in the contract are required. The City will initially receive an invoice for the annual license fee ($181,000) which will either be a FY 22 or FY 23 expense depending on how quickly the project gets underway. The FY 22 IT software budget has $444,250 available if this initial invoice is a FY 22 expense. The installation expense will be billed as incurred and little, if any, of this expense is anticipated to be FY 22 expense. The FY 23 budget will reflect the installation expense and the FY 23 annual license. The contract will cost $1,430,200 over the five-year life of the contract, excluding any minor reductions which might occur from requiring fewer installation support hours.

Proposed Action:

Staff recommends the City Commission authorize the City Manager to enter into a five-year contract with Tyler Technologies, Inc. for $1,430,200 for the installation and support of that firm's Enterprise Resource Planning (ERP) System.

Attachment:

1. Agenda
2. Scope of Work (SOW) from Tyler Technologies, Inc.
3. Tyler Technologies, Inc.– Software as a Service Agreement
4. Awarded Contract #090320-TTI with Sourcewell Cover Page.
5. Tyler Technologies, Inc. Quote for Opa-locka

Sourcewell

Solicitation Number: RFP #090320

CONTRACT

This Contract is between Sourcewell, 202 12th Street Northeast, P.O. Box 219, Staples, MN 56479 (Sourcewell) and Tyler Technologies, 5101 Tennyson Pkwy., Plano, TX 75024 (Vendor).

Sourcewell is a State of Minnesota local government agency and service cooperative created under the laws of the State of Minnesota (Minnesota Statutes Section 123A.21) that offers cooperative procurement solutions to government entities. Participation is open to federal, state/province, and municipal governmental entities, higher education, K-12 education, nonprofit, tribal government, and other public entities located in the United States and Canada.

Vendor desires to contract with Sourcewell to provide equipment, products, or services to Sourcewell and the entities that access Sourcewell's cooperative purchasing contracts (Participating Entities).

1. TERM OF CONTRACT

A. EFFECTIVE DATE. This Contract is effective upon the date of the final signature below.

B. EXPIRATION DATE AND EXTENSION. This Contract expires November 2, 2024, unless it is cancelled sooner pursuant to Article 24. This Contract may be extended up to one additional one-year period upon request of Sourcewell and with written agreement by Vendor.

C. SURVIVAL OF TERMS. Articles 11 through 16 survive the expiration or cancellation of this Contract.

2. EQUIPMENT, PRODUCTS, OR SERVICES

A. EQUIPMENT, PRODUCTS, OR SERVICES. Vendor will provide the Equipment, Products, or Services as stated in its Proposal submitted under the Solicitation Number listed above. Vendor's Equipment, Products, or Services Proposal (Proposal) is attached and incorporated into this Contract.

All Equipment and Products provided under this Contract must be new/current model. Vendor may offer close-out or refurbished Equipment or Products if they are clearly indicated in

Vendor's product and pricing list. Unless agreed to by the Participating Entities in advance, Equipment or Products must be delivered as operational to the Participating Entity's site.

This Contract offers an indefinite quantity of sales, and while substantial volume is anticipated, sales and sales volume are not guaranteed.

B. WARRANTIES. During the term of a current Maintenance or SaaS Agreement, Vendor makes the following warranties:

1. Tyler Software Warranty - Vendor's software will substantially conform to the functional descriptions of the Vendor software contained in Vendor's Proposal or their functional equivalent. Future functionality may be updated, modified, or otherwise enhanced through Vendor's maintenance and support services and the governing functional descriptions for such future functionality will be set forth in Vendor's then-current documentation.
2. Tyler Services Warranty - Vendor warrants that it will perform services in a professional, workmanlike manner, consistent with industry standards. In the event Vendor provides services that do not conform to this warranty, Vendor will re-perform the services at no additional cost.
3. Third Party Warranties – Unless otherwise indicated, Vendor does not warrant the condition of any third party products or services resold through Vendor's reseller agreement. Vendor will pass through any 3rd party warranties it receives for such items and will reasonably cooperate and coordinate for access to warranty service for 3rd party items Vendor resells.

C. DEALERS, DISTRIBUTORS, AND/OR RESELLERS. Upon Contract execution, Vendor will make available to Sourcewell a means to validate or authenticate Vendor's authorized dealers, distributors, and/or resellers relative to the Equipment, Products, and Services related to this Contract. This list may be updated from time-to-time and is incorporated into this Contract by reference. It is the Vendor's responsibility to ensure Sourcewell receives the most current version of this list.

3. PRICING

All Equipment, Products, or Services under this Contract will be priced as stated in Vendor's Proposal.

When providing pricing quotes to Participating Entities, all pricing quoted must reflect a Participating Entity's total cost of acquisition. This means that the quoted cost is for delivered Equipment, Products, and Services that are operational for their intended purpose, and includes all costs to the Participating Entity's requested delivery location.

Regardless of the payment method chosen by the Participating Entity, the total cost associated with any purchase option of the Equipment, Products, or Services must always be disclosed in the pricing quote to the applicable Participating Entity at the time of purchase.

A. SHIPPING AND SHIPPING COSTS. All delivered Equipment and Products must be properly packaged. Damaged Equipment and Products may be rejected. If the damage is not readily apparent at the time of delivery, Vendor must permit the Equipment and Products to be returned within a reasonable time at no cost to Sourcewell or its Participating Entities. Participating Entities reserve the right to inspect the Equipment and Products at a reasonable time after delivery where circumstances or conditions prevent effective inspection of the Equipment and Products at the time of delivery.

Vendor must arrange for and pay for the return shipment on Equipment and Products that arrive in a defective or inoperable condition.

Sourcewell may declare the Vendor in breach of this Contract if the Vendor intentionally delivers substandard or inferior Equipment or Products. In the event of the delivery of nonconforming Equipment and Products, the Participating Entity will notify the Vendor as soon as possible and the Vendor will replace nonconforming Equipment and Products with conforming Equipment and Products.

B. SALES TAX. Each Participating Entity is responsible for supplying the Vendor with valid tax-exemption certification(s). When ordering, a Participating Entity must indicate if it is a tax-exempt entity.

C. HOT LIST PRICING. At any time during this Contract, Vendor may offer a specific selection of Equipment, Products, or Services at discounts greater than those listed in the Contract. When Vendor determines it will offer Hot List Pricing, it must be submitted electronically to Sourcewell in a line-item format. Equipment, Products, or Services may be added or removed from the Hot List at any time through a Sourcewell Price and Product Change Form as defined in Article 4 below.

Hot List program and pricing may also be used to discount and liquidate close-out and discontinued Equipment and Products as long as those close-out and discontinued items are clearly identified as such. Current ordering process and administrative fees apply. Hot List Pricing must be published and made available to all Participating Entities.

4. PRODUCT AND PRICING CHANGE REQUESTS

Vendor may request Equipment, Product, or Service changes, additions, or deletions at any time. All requests must be made in writing by submitting a signed Sourcewell Price and Product Change Request Form to the assigned Sourcewell Contract Administrator. This form is available from the assigned Sourcewell Contract Administrator. At a minimum, the request must:

- Identify the applicable Sourcewell contract number;
- Clearly specify the requested change;
- Provide sufficient detail to justify the requested change;
- Individually list all Equipment, Products, or Services affected by the requested change, along with the requested change (e.g., addition, deletion, price change); and
- Include a complete restatement of pricing documentation in Microsoft Excel with the effective date of the modified pricing, or product addition or deletion. The new pricing restatement must include all Equipment, Products, and Services offered, even for those items where pricing remains unchanged.

A fully executed Sourcewell Price and Product Request Form will be become an amendment to this Contract and be incorporated by reference.

5. PARTICIPATION, CONTRACT ACCESS, AND PARTICIPATING ENTITY REQUIREMENTS

A. PARTICIPATION. Sourcewell's cooperative contracts are available and open to public and nonprofit entities across the United States and Canada; such as federal, state/province, municipal, K-12 and higher education, tribal government, and other public entities.

The benefits of this Contract should be available to all Participating Entities that can legally access the Equipment, Products, or Services under this Contract. A Participating Entity's authority to access this Contract is determined through its cooperative purchasing, interlocal, or joint powers laws. Any entity accessing benefits of this Contract will be considered a Service Member of Sourcewell during such time of access. Vendor understands that a Participating Entity's use of this Contract is at the Participating Entity's sole convenience and Participating Entities reserve the right to obtain like Equipment, Products, or Services from any other source.

Vendor is responsible for familiarizing its sales and service forces with Sourcewell contract use eligibility requirements and documentation and will encourage potential members to join Sourcewell. Sourcewell reserves the right to add and remove Participating Entities to its roster during the term of this Contract.

B. PUBLIC FACILITIES. Vendor's employees may be required to perform work at government-owned facilities, including schools. Vendor's employees and agents must conduct themselves in a professional manner while on the premises, and in accordance with Participating Entity policies and procedures, and all applicable laws.

6. PARTICIPATING ENTITY USE AND PURCHASING

A. ORDERS AND PAYMENT. To access the contracted Equipment, Products, or Services under this Contract, a Participating Entity must clearly indicate to Vendor that it intends to access this

Contract; however, order flow and procedure will be developed jointly between Sourcewell and Vendor. Typically, a Participating Entity will issue an order directly to Vendor. If a Participating Entity issues a purchase order, it may use its own forms, but the purchase order should clearly note the applicable Sourcewell contract number. All Participating Entity orders under this Contract must be issued prior to expiration of this Contract; however, Vendor performance, Participating Entity payment, and any applicable warranty periods or other Vendor or Participating Entity obligations may extend beyond the term of this Contract.

Vendor's acceptable forms of payment are included in Attachment A. Participating Entities will be solely responsible for payment and Sourcewell will have no liability for any unpaid invoice of any Participating Entity.

B. ADDITIONAL TERMS AND CONDITIONS/PARTICIPATING ADDENDUM. Additional terms and conditions to a purchase order may be negotiated between a Participating Entity and Vendor, such as job or industry-specific requirements, legal requirements (e.g., affirmative action or immigration status requirements), or specific local policy requirements. Some Participating Entitles may require the use of a Participating Addendum; the terms of which will be worked out directly between the Participating Entity and the Vendor. Any negotiated additional terms and conditions must never be less favorable to the Participating Entity than what is contained in this Contract. The foreging notwithstanding Vendor may require (i) execution of a software and services agreement in a form substantially similar to the one included with Vendor's proposal and/or (ii) require agreement to terms required by 3rd party product providers.

C. PERFORMANCE BOND. If requested by a Participating Entity, Vendor will provide a performance bond that meets the requirements set forth in the Participating Entity's order subject to Vendor's approval, not to be unreasonably withheld and payment by Participating Entity of the fee for the performance bond.

D. SPECIALIZED SERVICE REQUIREMENTS. In the event that the Participating Entity requires service or specialized performance requirements (such as e-commerce specifications, specialized delivery requirements, or other specifications and requirements) not addressed in this Contract, the Participating Entity and the Vendor may enter into a separate, standalone agreement, apart from this Contract. Sourcewell, including its agents and employees, will not be made a party to a claim for breach of such agreement.

E. TERMINATION OF ORDERS. Participating Entities may terminate an order, in whole or in part, immediately upon notice to Vendor in the event of any of the following events:

1. The Participating Entity fails to receive funding or appropriation from its governing body at levels sufficient to pay for the goods to be purchased;
2. Federal, state, or provincial laws or regulations prohibit the purchase or change the Participating Entity's requirements; or

3. Vendor commits any material breach of this Contract or the additional terms agreed to between the Vendor and a Participating Entity, subject to the terms of an executed software and services agreement between the Vendor and the Participating Entity.

F. GOVERNING LAW AND VENUE. The governing law and venue for any action related to a Participating Entity's order will be determined by the Participating Entity making the purchase.

7. CUSTOMER SERVICE

A. PRIMARY ACCOUNT REPRESENTATIVE. Vendor will assign an Account Representative to Sourcewell for this Contract and must provide prompt notice to Sourcewell if that person is changed. The Account Representative will be responsible for:

- Maintenance and management of this Contract;
- Timely response to all Sourcewell and Participating Entity inquiries; and
- Business reviews to Sourcewell and Participating Entities, if applicable.

B. BUSINESS REVIEWS. Vendor must perform a minimum of one business review with Sourcewell per contract year. The business review will cover sales to Participating Entities, pricing and contract terms, administrative fees, supply issues, customer issues, and any other necessary information.

8. REPORT ON CONTRACT SALES ACTIVITY AND ADMINISTRATIVE FEE PAYMENT

A. CONTRACT SALES ACTIVITY REPORT. Each calendar quarter, Vendor must provide a contract sales activity report (Report) to the Sourcewell Contract Administrator assigned to this Contract. A Report must be provided regardless of the number or amount of sales during that quarter (i.e., if there are no sales, Vendor must submit a report indicating no sales were made).

The Report must contain the following fields:

- Customer Name (e.g., City of Staples Highway Department);
- Customer Physical Street Address;
- Customer City;
- Customer State/Province;
- Customer Zip Code;
- Customer Contact Name;
- Customer Contact Email Address;
- Customer Contact Telephone Number;
- Sourcewell Assigned Entity/Participating Entity Number;
- Item Purchased Description;
- Item Purchased Price;

- Sourcewell Administrative Fee Applied; and
- Date Purchase was invoiced/sale was recognized as revenue by Vendor.

B. ADMINISTRATIVE FEE. In consideration for the support and services provided by Sourcewell, the Vendor will pay an administrative fee to Sourcewell on all Equipment, Products, and Services provided to Participating Entities. The Administrative Fee must be included in, and not added to, the pricing. Vendor may not charge Participating Entities more than the contracted price to offset the Administrative Fee.

The Vendor will submit a check payable to Sourcewell for the percentage of administrative fee stated in the Proposal multiplied by the total sales of all Equipment, Products, and Services purchased by Participating Entities under this Contract during each calendar quarter. Payments should note the Sourcewell-assigned contract number in the memo and must be mailed to the address above "Attn: Accounts Receivable." Payments must be received no later than 45 calendar days after the end of each calendar quarter.

Vendor agrees to cooperate with Sourcewell in auditing transactions under this Contract to ensure that the administrative fee is paid on all items purchased under this Contract.

In the event the Vendor is delinquent in any undisputed administrative fees, Sourcewell reserves the right to cancel this Contract and reject any proposal submitted by the Vendor in any subsequent solicitation. In the event this Contract is cancelled by either party prior to the Contract's expiration date, the administrative fee payment will be due no more than 30 days from the cancellation date.

9. AUTHORIZED REPRESENTATIVE

Sourcewell's Authorized Representative is its Chief Procurement Officer.

Vendor's Authorized Representative is the person named in the Vendor's Proposal. If Vendor's Authorized Representative changes at any time during this Contract, Vendor must promptly notify Sourcewell in writing.

10. ASSIGNMENT, AMENDMENTS, WAIVER, AND CONTRACT COMPLETE

A. ASSIGNMENT. Neither the Vendor nor Sourcewell may assign or transfer any rights or obligations under this Contract without the prior consent of the parties and a fully executed assignment agreement. Such consent will not be unreasonably withheld.

B. AMENDMENTS. Any amendment to this Contract must be in writing and will not be effective until it has been fully executed by the parties.

C. WAIVER. If either party fails to enforce any provision of this Contract, that failure does not waive the provision or the right to enforce it.

D. CONTRACT COMPLETE. This Contract contains all negotiations and agreements between Sourcewell and Vendor. No other understanding regarding this Contract, whether written or oral, may be used to bind either party.

E. RELATIONSHIP OF THE PARTIES. The relationship of the parties is one of independent contractors, each free to exercise judgment and discretion with regard to the conduct of their respective businesses. This Contract does not create a partnership, joint venture, or any other relationship such as master-servant, or principal-agent.

11. LIABILITY

Vendor must indemnify, save, and hold Sourcewell and its Participating Entities, including their agents and employees, harmless from any claims or causes of action, including attorneys' fees, arising out of the performance of this Contract by the Vendor or its agents or employees; this indemnification includes injury or death to person(s) or property alleged to have been caused by some defect in the Equipment, Products, or Services under this Contract to the extent the Equipment, Product, or Service has been used according to its specifications.

12. AUDITS

Sourcewell reserves the right to review the books, records, documents, and accounting procedures and practices of the Vendor relevant to this Contract for a minimum of 6 years from the end of this Contract. This clause extends to Participating Entities as it relates to business conducted by that Participating Entity under this Contract.

13. GOVERNMENT DATA PRACTICES

Vendor and Sourcewell must comply with the Minnesota Government Data Practices Act, Minnesota Statutes Chapter 13, as it applies to all data provided by or provided to Sourcewell under this Contract and as it applies to all data created, collected, received, stored, used, maintained, or disseminated by the Vendor under this Contract. Sourcewell and Vendor acknowledge that compliance with the Minnesota Government Data Practices Act extends only to that data to which the Act applies.

If the Vendor receives a request to release the data referred to in this article, the Vendor must comply with the Minnesota Government Data Practices Act, including any appropriate notice to Sourcewell. In such event, Sourcewell will assist with how the Vendor should respond to the request.

14. INDEMNIFICATION

Vendor will defend, indemnify, and hold harmless Sourcewell and/or a Participating Entity from third-party claims that the Vendor's software and/or documentation infringes that third party's patent, copyright, or trademark, or misappropriates its trade secrets and will pay the amount of any resulting adverse final judgment (or settlement to which Vendor consents). Sourcewell or a Participating Entity must notify Vendor promptly in writing of the claim and give Vendor sole control over its defense or settlement. Sourcewell or a Participating Entity agree to provide reasonable assistance, cooperation, and information in defending the claim at Vendor's expense. If an infringement or misappropriation claim is fully litigated and Sourcewell or a Participating Entity's use of Vendor's Software is enjoined by a court of competent jurisdiction, in addition to paying any adverse final judgment (or settlement to which Vendor consents) Vendor will, at Vendor's option either: (a) procure the right to continue its use; (b) modify it to make it non-infringing; or (c) replace it with a functional equivalent.

15. INTELLECTUAL PROPERTY, PUBLICITY, MARKETING, AND ENDORSEMENT

A. INTELLECTUAL PROPERTY

1. *Grant of License.* During the term of this Contract:

   a. Sourcewell grants to Vendor a royalty-free, worldwide, non-exclusive right and license to use theTrademark(s) provided to Vendor by Sourcewell in advertising and promotional materials for the purpose of marketing Sourcewell's relationship with Vendor.

   b. Vendor grants to Sourcewell a royalty-free, worldwide, non-exclusive right and license to use Vendor's Trademarks in advertising and promotional materials for the purpose of marketing Vendor's relationship with Sourcewell.

2. *Limited Right of Sublicense*. The right and license granted herein includes a limited right of each party to grant sublicenses to its and their respective distributors, marketing representatives, and agents (collectively "Permitted Sublicensees") in advertising and promotional materials for the purpose of marketing the Parties' relationship to Participating Entities. Any sublicense granted will be subject to the terms and conditions of this Article. Each party will be responsible for any breach of this Article by any of their respective sublicensees.

3. *Use; Quality Control.*

   a. Sourcewell must not alter Vendor's Trademarks from the form provided by Vendor and must comply with Vendor's removal requests as to specific uses of its trademarks or logos.

   b. Vendor must not alter Sourcewell's Trademarks from the form provided by Sourcewell and must comply with Sourcewell's removal requests as to specific uses of its trademarks or logos.

   c. Each party agrees to use, and to cause its Permitted Sublicensees to use, the other party's Trademarks only in good faith and in a dignified manner consistent with such party's use of the Trademarks. Upon written notice to the breaching party,

the breaching party has 30 days of the date of the written notice to cure the breach or the license will be terminated.

4. *Termination*. Upon the termination of this Contract for any reason, each party, including Permitted Sublicensees, will have 30 days to remove all Trademarks from signage, websites, and the like bearing the other party's name or logo (excepting Sourcewell's pre-printed catalog of vendors which may be used until the next printing). Vendor must return all marketing and promotional materials, including signage, provided by Sourcewell, or dispose of it according to Sourcewell's written directions.

B. PUBLICITY. Any publicity regarding the subject matter of this Contract must not be released without prior written approval from the Authorized Representatives. Publicity includes notices, informational pamphlets, press releases, research, reports, signs, and similar public notices prepared by or for the Vendor individually or jointly with others, or any subcontractors, with respect to the program, publications, or services provided resulting from this Contract.

C. MARKETING. Any direct advertising, marketing, or offers with Participating Entities must be approved by Sourcewell. Materials should be sent to the Sourcewell Contract Administrator assigned to this Contract.

D. ENDORSEMENT. The Vendor must not claim that Sourcewell endorses its Equipment, Products, or Services.

16. GOVERNING LAW, JURISDICTION, AND VENUE

Minnesota law governs this Contract. Venue for all legal proceedings out of this Contract, or its breach, must be in the appropriate state court in Todd County or federal court in Fergus Falls, Minnesota.

17. FORCE MAJEURE

Neither party to this Contract will be held responsible for delay or default caused by acts of God or other conditions that are beyond that party's reasonable control. A party defaulting under this provision must provide the other party prompt written notice of the default.

18. SEVERABILITY

If any provision of this Contract is found to be illegal, unenforceable, or void then both Sourcewell and Vendor will be relieved of all obligations arising under such provisions. If the remainder of this Contract is capable of performance, it will not be affected by such declaration or finding and must be fully performed.

19. PERFORMANCE, DEFAULT, AND REMEDIES

A. PERFORMANCE. During the term of this Contract, the parties will monitor performance and address unresolved contract issues as follows:

1. *Notification.* The parties must promptly notify each other of any known dispute and work in good faith to resolve such dispute within a reasonable period of time. If necessary, Sourcewell and the Vendor will jointly develop a short briefing document that describes the issue(s), relevant impact, and positions of both parties.
2. *Escalation.* If parties are unable to resolve the issue in a timely manner, as specified above, either Sourcewell or Vendor may escalate the resolution of the issue to a higher level of management. The Vendor will have 30 calendar days to cure an outstanding issue.
3. *Performance while Dispute is Pending*. Notwithstanding the existence of a dispute, the Vendor must continue without delay to carry out all of its responsibilities under the Contract that are not affected by the dispute.

B. DEFAULT AND REMEDIES. Either of the following constitutes cause to declare this Contract, or any Participating Entity order under this Contract, in default:

1. Nonperformance of contractual requirements, or
2. A material breach of any term or condition of this Contract.

Written notice of default and a reasonable opportunity to cure must be issued by the party claiming default. Time allowed for cure will not diminish or eliminate any liability for liquidated or other damages. If the default remains after the opportunity for cure, the non-defaulting party may:

- Exercise any remedy provided by law or equity, or
- Terminate the Contract or any portion thereof, including any orders issued against the Contract.

20. INSURANCE

A. REQUIREMENTS. At its own expense, Vendor must maintain insurance policy(ies) in effect at all times during the performance of this Contract with insurance company(ies) licensed or authorized to do business in the State of Minnesota having an "AM BEST" rating of A- or better, with coverage and limits of insurance not less than the following:

1. *Workers' Compensation and Employer's Liability.*

Workers' Compensation: As required by any applicable law or regulation.

Employer's Liability Insurance: must be provided in amounts not less than listed below:

Minimum limits:

$500,000 each accident for bodily injury by accident

$500,000 policy limit for bodily injury by disease
$500,000 each employee for bodily injury by disease

2. *Commercial General Liability Insurance.* Vendor will maintain insurance covering its operations, with coverage on an occurrence basis, and must be subject to terms no less broad than the Insurance Services Office ("ISO") Commercial General Liability Form CG0001 (2001 or newer edition), or equivalent. At a minimum, coverage must include liability arising from premises, operations, bodily injury and property damage, independent contractors, products-completed operations including construction defect, contractual liability, blanket contractual liability, and personal injury and advertising injury. All required limits, terms and conditions of coverage must be maintained during the term of this Contract.

Minimum Limits:
$1,000,000 each occurrence Bodily Injury and Property Damage
$1,000,000 Personal and Advertising Injury
$2,000,000 aggregate for Products-Completed operations
$2,000,000 general aggregate

3. *Commercial Automobile Liability Insurance.* During the term of this Contract, Vendor will maintain insurance covering all owned, hired, and non-owned automobiles in limits of liability not less than indicated below. The coverage must be subject to terms no less broad than ISO Business Auto Coverage Form CA 0001 (2010 edition or newer), or equivalent.

Minimum Limits:
$1,000,000 each accident, combined single limit

4. *Umbrella Insurance*. During the term of this Contract, Vendor will maintain umbrella coverage over Workers' Compensation, Commercial General Liability, and Commercial Automobile.

Minimum Limits:
$2,000,000

5. *Professional/Technical, Errors and Omissions, and/or Miscellaneous Professional Liability*. During the term of this Contract, Vendor will maintain coverage for all claims the Vendor may become legally obligated to pay resulting from any actual or alleged negligent act, error, or omission related to Vendor's professional services required under this Contract.

Minimum Limits:
$2,000,000 per claim or event
$2,000,000 – annual aggregate

6. *Network Security and Privacy Liability Insurance*. During the term of this Contract, Vendor will maintain coverage for network security and privacy liability. The

coverage may be endorsed on another form of liability coverage or written on a standalone policy. The insurance must cover claims which may arise from failure of Vendor's security resulting in, but not limited to, computer attacks, unauthorized access, disclosure of not public data – including but not limited to, confidential or private information, transmission of a computer virus, or denial of service.

Minimum limits:
$2,000,000 per occurrence
$2,000,000 annual aggregate

Failure of Vendor to maintain the required insurance will constitute a material breach entitling Sourcewell to immediately terminate this Contract for default.

B. CERTIFICATES OF INSURANCE. Prior to commencing under this Contract, Vendor must furnish to Sourcewell a certificate of insurance, as evidence of the insurance required under this Contract. Prior to expiration of the policy(ies), renewal certificates must be mailed to Sourcewell, 202 12th Street Northeast, P.O. Box 219, Staples, MN 56479 or sent to the Sourcewell Contract Administrator assigned to this Contract. The certificates must be signed by a person authorized by the insurer(s) to bind coverage on their behalf. Vendor must provide 30 days notice of any change in insurance coverage at variance with the contract requirements and promptly remedy any such variance.

Failure to request certificates of insurance by Sourcewell, or failure of Vendor to provide certificates of insurance, in no way limits or relieves Vendor of its duties and responsibilities in this Contract.

C. ADDITIONAL INSURED ENDORSEMENT AND PRIMARY AND NON-CONTRIBUTORY INSURANCE CLAUSE. Vendor agrees to list Sourcewell and its Participating Entities, including their officers, agents, and employees, as an additional insured under the Vendor's commercial general liability insurance policy with respect to liability arising out of activities, "operations," or "work" performed by or on behalf of Vendor, and products and completed operations of Vendor. The policy provision(s) or endorsement(s) must further provide that coverage is primary and not excess over or contributory with any other valid, applicable, and collectible insurance or self-insurance in force for the additional insureds.

D. WAIVER OF SUBROGATION. Vendor waives and must require (by endorsement or otherwise) all its insurers to waive subrogation rights against Sourcewell and other additional insureds for losses paid under the insurance policies required by this Contract or other insurance applicable to the Vendor or its subcontractors. The waiver must apply to all deductibles and/or self-insured retentions applicable to the required or any other insurance maintained by the Vendor or its subcontractors. Where permitted by law, Vendor must require similar written express waivers of subrogation and insurance clauses from each of its subcontractors.

E. UMBRELLA/EXCESS LIABILITY. The limits required by this Contract can be met by either providing a primary policy or in combination with umbrella/excess liability policy(ies), or self-insured retention.

21. COMPLIANCE

A. LAWS AND REGULATIONS. All Equipment, Products, or Services provided under this Contract must comply fully with applicable federal laws and regulations, and with the laws in the states and provinces in which the Equipment, Products, or Services are sold.

B. LICENSES. Vendor must maintain a valid and current status on all required federal, state/provincial, and local licenses, bonds, and permits required for the operation of the business that the Vendor conducts with Sourcewell and Participating Entities.

22. BANKRUPTCY, DEBARMENT, OR SUSPENSION CERTIFICATION

Vendor certifies and warrants that it is not in bankruptcy or that it has previously disclosed in writing certain information to Sourcewell related to bankruptcy actions. If at any time during this Contract Vendor declares bankruptcy, Vendor must immediately notify Sourcewell in writing.

Vendor certifies and warrants that neither it nor its principals are presently debarred, suspended, proposed for debarment, declared ineligible, or voluntarily excluded from programs operated by the State of Minnesota; the United States federal government or the Canadian government, as applicable; or any Participating Entity. Vendor certifies and warrants that neither it nor its principals have been convicted of a criminal offense related to the subject matter of this Contract. Vendor further warrants that it will provide immediate written notice to Sourcewell if this certification changes at any time.

23. PROVISIONS FOR NON-UNITED STATES FEDERAL ENTITY PROCUREMENTS UNDER UNITED STATES FEDERAL AWARDS OR OTHER AWARDS

Participating Entities that use United States federal grant or FEMA funds to purchase goods or services from this Contract may be subject to additional requirements including the procurement standards of the Uniform Administrative Requirements, Cost Principles and Audit Requirements for Federal Awards, 2 C.F.R. § 200. Participating Entities may also require additional requirements based on specific funding specifications. Within this Article, all references to "federal" should be interpreted to mean the United States federal government. The following list only applies when a Participating Entity accesses Vendor's Equipment, Products, or Services with United States federal funds.

A. EQUAL EMPLOYMENT OPPORTUNITY. Except as otherwise provided under 41 C.F.R. § 60, all contracts that meet the definition of "federally assisted construction contract" in 41 C.F.R. § 60-

DocuSign Envelope ID: 53B16E1A-E395-497E-80EE-1B2CAC17DC0E

1.3 must include the equal opportunity clause provided under 41 C.F.R. §60-1.4(b), in accordance with Executive Order 11246, "Equal Employment Opportunity" (30 FR 12319, 12935, 3 C.F.R. §, 1964-1965 Comp., p. 339), as amended by Executive Order 11375, "Amending Executive Order 11246 Relating to Equal Employment Opportunity," and implementing regulations at 41 C.F.R. § 60, "Office of Federal Contract Compliance Programs, Equal Employment Opportunity, Department of Labor." The equal opportunity clause is incorporated herein by reference.

B. DAVIS-BACON ACT, AS AMENDED (40 U.S.C. § 3141-3148). When required by federal program legislation, all prime construction contracts in excess of $2,000 awarded by non-federal entities must include a provision for compliance with the Davis-Bacon Act (40 U.S.C. § 3141-3144, and 3146-3148) as supplemented by Department of Labor regulations (29 C.F.R. § 5, "Labor Standards Provisions Applicable to Contracts Covering Federally Financed and Assisted Construction"). In accordance with the statute, contractors must be required to pay wages to laborers and mechanics at a rate not less than the prevailing wages specified in a wage determination made by the Secretary of Labor. In addition, contractors must be required to pay wages not less than once a week. The non-federal entity must place a copy of the current prevailing wage determination issued by the Department of Labor in each solicitation. The decision to award a contract or subcontract must be conditioned upon the acceptance of the wage determination. The non-federal entity must report all suspected or reported violations to the federal awarding agency. The contracts must also include a provision for compliance with the Copeland "Anti-Kickback" Act (40 U.S.C. § 3145), as supplemented by Department of Labor regulations (29 C.F.R. § 3, "Contractors and Subcontractors on Public Building or Public Work Financed in Whole or in Part by Loans or Grants from the United States"). The Act provides that each contractor or subrecipient must be prohibited from inducing, by any means, any person employed in the construction, completion, or repair of public work, to give up any part of the compensation to which he or she is otherwise entitled. The non-federal entity must report all suspected or reported violations to the federal awarding agency. Vendor must be in compliance with all applicable Davis-Bacon Act provisions.

C. CONTRACT WORK HOURS AND SAFETY STANDARDS ACT (40 U.S.C. § 3701-3708). Where applicable, all contracts awarded by the non-federal entity in excess of $100,000 that involve the employment of mechanics or laborers must include a provision for compliance with 40 U.S.C. §§ 3702 and 3704, as supplemented by Department of Labor regulations (29 C.F.R. § 5). Under 40 U.S.C. § 3702 of the Act, each contractor must be required to compute the wages of every mechanic and laborer on the basis of a standard work week of 40 hours. Work in excess of the standard work week is permissible provided that the worker is compensated at a rate of not less than one and a half times the basic rate of pay for all hours worked in excess of 40 hours in the work week. The requirements of 40 U.S.C. § 3704 are applicable to construction work and provide that no laborer or mechanic must be required to work in surroundings or under working conditions which are unsanitary, hazardous or dangerous. These requirements do not apply to the purchases of supplies or materials or articles ordinarily available on the open market, or contracts for transportation or transmission of intelligence. This provision is

hereby incorporated by reference into this Contract. Vendor certifies that during the term of an award for all contracts by Sourcewell resulting from this procurement process, Vendor must comply with applicable requirements as referenced above.

D. RIGHTS TO INVENTIONS MADE UNDER A CONTRACT OR AGREEMENT. If the federal award meets the definition of "funding agreement" under 37 C.F.R. § 401.2(a) and the recipient or subrecipient wishes to enter into a contract with a small business firm or nonprofit organization regarding the substitution of parties, assignment or performance of experimental, developmental, or research work under that "funding agreement," the recipient or subrecipient must comply with the requirements of 37 C.F.R. § 401, "Rights to Inventions Made by Nonprofit Organizations and Small Business Firms Under Government Grants, Contracts and Cooperative Agreements," and any implementing regulations issued by the awarding agency. Vendor certifies that during the term of an award for all contracts by Sourcewell resulting from this procurement process, Vendor must comply with applicable requirements as referenced above.

E. CLEAN AIR ACT (42 U.S.C. § 7401-7671Q.) AND THE FEDERAL WATER POLLUTION CONTROL ACT (33 U.S.C. § 1251-1387). Contracts and subgrants of amounts in excess of $150,000 require the non-federal award to agree to comply with all applicable standards, orders or regulations issued pursuant to the Clean Air Act (42 U.S.C. § 7401- 7671q) and the Federal Water Pollution Control Act as amended (33 U.S.C. § 1251- 1387). Violations must be reported to the Federal awarding agency and the Regional Office of the Environmental Protection Agency (EPA). Vendor certifies that during the term of this Contract will comply with applicable requirements as referenced above.

F. DEBARMENT AND SUSPENSION (EXECUTIVE ORDERS 12549 AND 12689). A contract award (see 2 C.F.R. § 180.220) must not be made to parties listed on the government wide exclusions in the System for Award Management (SAM), in accordance with the OMB guidelines at 2 C.F.R. §180 that implement Executive Orders 12549 (3 C.F.R. § 1986 Comp., p. 189) and 12689 (3 C.F.R. § 1989 Comp., p. 235), "Debarment and Suspension." SAM Exclusions contains the names of parties debarred, suspended, or otherwise excluded by agencies, as well as parties declared ineligible under statutory or regulatory authority other than Executive Order 12549. Vendor certifies that neither it nor its principals are presently debarred, suspended, proposed for debarment, declared ineligible, or voluntarily excluded from participation by any federal department or agency.

G. BYRD ANTI-LOBBYING AMENDMENT, AS AMENDED (31 U.S.C. § 1352). Vendors must file any required certifications. Vendors must not have used federal appropriated funds to pay any person or organization for influencing or attempting to influence an officer or employee of any agency, a member of Congress, officer or employee of Congress, or an employee of a member of Congress in connection with obtaining any federal contract, grant, or any other award covered by 31 U.S.C. § 1352. Vendors must disclose any lobbying with non-federal funds that takes place in connection with obtaining any federal award. Such disclosures are forwarded from tier to tier up to the non-federal award. Vendors must file all certifications and disclosures

required by, and otherwise comply with, the Byrd Anti-Lobbying Amendment (31 U.S.C. § 1352).

H. RECORD RETENTION REQUIREMENTS. To the extent applicable, Vendor must comply with the record retention requirements detailed in 2 C.F.R. § 200.333. The Vendor further certifies that it will retain all records as required by 2 C.F.R. § 200.333 for a period of 3 years after grantees or subgrantees submit final expenditure reports or quarterly or annual financial reports, as applicable, and all other pending matters are closed.

I. ENERGY POLICY AND CONSERVATION ACT COMPLIANCE. To the extent applicable, Vendor must comply with the mandatory standards and policies relating to energy efficiency which are contained in the state energy conservation plan issued in compliance with the Energy Policy and Conservation Act.

J. BUY AMERICAN PROVISIONS COMPLIANCE. To the extent applicable, Vendor must comply with all applicable provisions of the Buy American Act. Purchases made in accordance with the Buy American Act must follow the applicable procurement rules calling for free and open competition.

K. ACCESS TO RECORDS (2 C.F.R. § 200.336). Vendor agrees that duly authorized representatives of a federal agency must have access to any books, documents, papers and records of Vendor that are directly pertinent to Vendor's discharge of its obligations under this Contract for the purpose of making audits, examinations, excerpts, and transcriptions. The right also includes timely and reasonable access to Vendor's personnel for the purpose of interview and discussion relating to such documents.

L. PROCUREMENT OF RECOVERED MATERIALS (2 C.F.R. § 200.322). A non-federal entity that is a state agency or agency of a political subdivision of a state and its contractors must comply with Section 6002 of the Solid Waste Disposal Act, as amended by the Resource Conservation and Recovery Act. The requirements of Section 6002 include procuring only items designated in guidelines of the Environmental Protection Agency (EPA) at 40 C.F.R. § 247 that contain the highest percentage of recovered materials practicable, consistent with maintaining a satisfactory level of competition, where the purchase price of the item exceeds $10,000 or the value of the quantity acquired during the preceding fiscal year exceeded $10,000; procuring solid waste management services in a manner that maximizes energy and resource recovery; and establishing an affirmative procurement program for procurement of recovered materials identified in the EPA guidelines.

24. CANCELLATION

Sourcewell or Vendor may cancel this Contract at any time, with or without cause, upon 60 days' written notice to the other party. However, Sourcewell may cancel this Contract immediately upon discovery of a material defect in any certification made in Vendor's Proposal.

Cancellation of this Contract does not relieve either party of financial, product, or service obligations incurred or accrued prior to cancellation.

Sourcewell

DocuSigned by:
Jeremy Schwartz
C0FD2A139D06489...

By: _____
Jeremy Schwartz
Title: Director of Operations & Procurement/CPO
12/10/2020 | 9:55 AM CST
Date: _____

Tyler Technologies

DocuSigned by:
Andrea Fravert
F9BA6001D8B34DA...

By: _____
Andrea Fravert
Title: Director of Legal Affairs
12/15/2020 | 8:49 AM PST
Date: _____

Approved:

DocuSigned by:
Chad Coauette
7E42B8F817A64CC...

By: _____
Chad Coauette
Title: Executive Director/CEO
12/15/2020 | 11:07 AM CST
Date: _____

RFP 090320 - Public Sector and Education Administration Software Solutions with Related Services

Vendor Details

Company Name:	Tyler Technologies
Does your company conduct business under any other name? If yes, please state:	Maine
Address:	1 Tyler Drive Yarmouth, Maine 04096
Contact:	Ehren Morse
Email:	ehren.morse@tylertech.com
Phone:	800-772-2260 4662
Fax:	207-712-6025
HST#:	75-2303920

Submission Details

Created On:	Thursday July 16, 2020 08:36:29
Submitted On:	Thursday September 03, 2020 16:18:31
Submitted By:	Ehren Morse
Email:	ehren.morse@tylertech.com
Transaction #:	2a2dd418-38ed-4881-94f8-bc0bd29d824c
Submitter's IP Address:	207.182.208.2

Specifications

Table 1: Proposer Identity & Authorized Representatives

General Instructions (applies to all Tables) Sourcewell prefers a brief but thorough response to each question. Please do not merely attach additional documents to your response without also providing a substantive response. Do not leave answers blank; mark "NA" if the question does not apply to you (preferably with an explanation).

Line Item	Question	Response *	
1	Proposer Legal Name (and applicable d/b/a, if any):	Tyler Technologies	*
2	Proposer Address:	5101 Tennyson Pkwy, Plano, TX 75024	*
3	Proposer website address:	www.tylertech.com	*
4	Proposer's Authorized Representative (name, title, address, email address & phone) (The representative must have authority to sign the "Proposer's Assurance of Compliance" on behalf of the Proposer and, in the event of award, will be expected to execute the resulting contract):	Andrea Fravert Director of Legal Affairs 1 Tyler Drive Yarmouth, Maine 04096 1-800-772-2260 Andrea.Fravert@tylertech.com	*
5	Proposer's primary contact for this proposal (name, title, address, email address & phone):	Ehren Morse Sales Operations Manager 1 Tyler Drive Yarmouth, Maine 04096 Ehren.Morse@tylertech.com 1-800-772-2260 ext. 4662	*
6	Proposer's other contacts for this proposal, if any (name, title, address, email address & phone):	Peter Rickett VP Sales Enablement 1 Tyler Drive Yarmouth, Maine 04096 Peter.Rickett@tylertech.com 1-800-772-2260	

Table 2: Company Information and Financial Strength

Line Item	Question	Response *
7	Provide a brief history of your company, including your company's core values, business philosophy, and industry longevity related to the requested equipment, products or services.	Partnering with government and schools to deliver the best technology solutions is our passion at Tyler. We have decades of experience providing software and services – beginning our exclusive focus on the public sector in 1997 – no one in the market has the breadth or the experience we have. Public sector software is not just what we do, it's all we do. At Tyler, we imagine a world where all city, county, and regional government services are connected within a healthy digital infrastructure. Connecting data, processes, and people makes communities safer, smarter, and more responsive to the needs of residents. When technology works seamlessly, citizens connect to their communities and are more engaged, and government and schools can efficiently serve their constituents. What are our values? Purpose – we are purpose driven. Tyler has built its brand by delivering value for clients, creating a strong workplace culture, ensuring transparency in our operations, and empowering strong, vibrant communities. We take great pride in the Tyler brand and what it stands for. Respect – we respect our resources. Respect for the environment is more than a mindset; it requires real investment and focus. In 2019, we continued to make meaningful changes to our operations,

infrastructure, and product offerings to better conserve natural resources and address environmental concerns at global and local levels.

Community – we are committed to building community.

A spirit of community is a common thread that runs through every interaction, inside and outside our organization.For our communities, this means generous giving through the Tyler Foundation, our endowment for charitable giving. It also means continuing our unique relationship with Both Ends Believing, Tyler's nonprofit partner benefiting children in institutional care around the world.

For our company, this means support for the wellness and fulfilment of our employees, as well as for a wide range of causes they care about. In 2019, our commitment to employee engagement earned us inclusion in Forbes' America's Best Midsize Employers for the second straight year.

For our clients and shareholders, this means providing peace of mind by investing in security, compliance, and privacy initiatives that meet or exceed software industry standards. We publish specific guidance on these programs on the Compliance page of our website.

Integrity – we refuse to compromise on integrity.

Every aspect of our business begins and ends with integrity. In adhering to corporate governance standards, integrity is our guiding principle and our number one requirement for success — with our team members, our clients, our shareholders, and even with our competitors. We consider integrity to be at the heart of our success and uphold it on a daily basis through careful listening, thoughtful analysis, and responsible decision making.

Company Background

Tyler Technologies is the largest and most established provider of integrated software and technology services focused on the public sector. Tyler's end-to-end solutions empower local, state, and federal government entities to operate more efficiently and connect more transparently with their constituents and with each other. By connecting data and processes across disparate systems, Tyler's solutions are transforming how clients gain actionable insights that solve problems in their communities.

Tyler empowers government and schools to create safer, smarter, and more vibrant communities through integrated solutions ranging from Appraisal & Tax, Civic Services, Courts & Justice, Data & Insights, ERP, Land & Official Records to Public Safety and K-12 Education, and has been exclusively focused on the public sector since 1997.
Tyler was founded in 1966, incorporated in Delaware in November 1989 and is a publicly traded corporation on the NYSE (TYL) and is headquartered in Plano, TX, with 28 office locations across the U.S. and Canada.

With a client retention rate of 98%, Tyler has more than 21,000 successful installations across 10,000 sites, with clients in all 50 states, Canada, the Caribbean, Australia, and other international locations. Tyler offers scalable products with the smallest jurisdiction (Loving County, TX with a Population of 82) to the largest (Los Angeles County, CA with a population of 10.1M), and reinvests annually into research and development ($64M in 2019).

Our Products

With decades of exclusive public sector experience, Tyler is the market leader providing integrated software and services. Subject matter experts and in-depth products result in a sustainable client partnership that delivers the industry's most comprehensive solution. We provide the industry's broadest line of software products and offer clients a single source for all their information technology needs in several major areas: Appraisal & Tax, ERP, Civic Services, Land & Official Records, Courts & Justice, Public Safety, Data & Insights, and K-12 Education. We are known for long-standing client relationships, functional and feature-rich products, and the latest technology. In addition to software products, Tyler provides related professional services including installation, data conversion, consulting, training, customization, support, disaster recovery, and application and data hosting.

Public Sector Focus

Tyler's business units have provided software and services to customers for more than fifty years and have long-standing reputations in the local government market for quality products and customer service. Tyler is the largest company in the United States focused solely on providing software solutions to the public sector. While many of our competitors compete in multiple vertical markets, Tyler is singularly focused on

		the public sector. It's 100 percent of our business. Tyler recognizes that the public sector is generally stable, risk averse, and craves community accessibility, security, and transparency. That is why local government and school entities seek reliable and efficient software and services from Tyler—a vendor who is professional, reputable, dedicated, and achieves results. Tyler has the experience to understand the unique requirements of the public sector, the necessary resources to invest in its products, and the ability to deliver quality services. Our Experience Tyler Technologies' solutions offer the widest breadth of products in the industry, the latest technology available, and an integrated system that can operate in diverse offices throughout a jurisdiction. More importantly, Tyler's vision and skill in executing that vision is what ultimately leads to a successful implementation and long-term solution for our customers. Our experienced team consists of industry leaders that keep our team moving and making sure we can give you the tools to succeed.	
8	What are your company's expectations in the event of an award?	Tyler is invested in continuing to promote and foster usage of the contract. Tyler has been able to market the benefits of our existing contract internally and externally so sales staff are empowered with knowledge to promote its use and prospective clients are aware of its availability and benefit to their agency.	*
9	Demonstrate your financial strength and stability with meaningful data. This could include such items as financial statements, SEC filings, credit and bond ratings, letters of credit, and detailed reference letters. Upload supporting documents (as applicable) in the document upload section of your response.	Tyler consistently maintains a solid balance sheet and strong cash flow and low debt, experiencing consistent revenue growth with 29 consecutive quarters of profitability, and a total revenue for 2019 of $1.08 billion. While experiencing significant growth opportunities from an increase in staff and expanding territories, we anticipate additional product offerings and new technology will accelerate this growth substantially in the future. We believe a debt-free balance sheet, substantial cash reserves, and a committed customer base put Tyler in a great position in our industry to weather any unexpected turbulence in the economy. For additional revenue information please visit www.tylertech.com. Tyler's continued success validates our strategy of a singular focus of serving mission-critical needs of the public sector, backed by a strong balance sheet and strategic investments that bolster our market leadership. This singular focus is executed though multiple dimensions of products and services. In June of this year, Tyler was named to the S&P 500® index. This is a major achievement and milestone for Tyler reflecting Tyler's consistent growth and expanding market capitalization over the last two decades. Tyler's commitment to providing essential software and services to support the public sector remains stronger than ever. Please visit tylertech.irpass.com/Annual_Report_Financials to view our current annual report.	*
10	What is your US market share for the solutions that you are proposing?	Gartner estimates the total market for state/local government and education (excluding higher education) to be approximately $21B. Tyler currently estimates our addressable market in the US to be $9 billion, of which our current market share is around 13%.	*
11	What is your Canadian market share for the solutions that you are proposing?	Tyler has an established presence in Canada with an increasing footprint and pipeline for new business. More than a third of our business units have existing clients in Canada and a strategic focus on increasing market share.	*
12	Has your business ever petitioned for bankruptcy protection? If so, explain in detail.	Tyler has never petitioned for bankruptcy protection and as described above is very proud of it's financial strength with consistent long term revenue growth, a strong cash position and no current debt.	*
13	How is your organization best described: is it a manufacturer, a distributor/dealer/reseller, or a service provider? Answer whichever question (either a) or b) just below) best applies to your organization. a) If your company is best described as a distributor/dealer/reseller (or similar entity), provide your written authorization to act as a distributor/dealer/reseller for the manufacturer of the products proposed in this RFP. If applicable, is your dealer network independent or company owned? b) If your company is best described as a manufacturer or service provider, describe your relationship with your sales and service force and with your dealer network in delivering the products and services proposed in this RFP. Are these individuals your employees, or the employees of a third party?	Tyler is best described as a manufacturer and service provider. A great benefit to Sourcewell members as Tyler not only develops and supports our software in house, we also have an impressive implementation team that works directly with our clients to ensure a smooth implementation. These internal teams work together seamlessly to ensure that all our products and services offered provide the best solutions to the public sector's evolving needs. Tyler offers a variety of solutions designed specifically for the public sector. From ERP and community development to public safety and school transportation, we provide solutions for all the public sector's needs. For Sourcewell members, that means one partner – one company to work with and solutions that were designed to work together.	*

14	If applicable, provide a detailed explanation outlining the licenses and certifications that are both required to be held, and actually held, by your organization (including third parties and subcontractors that you use) in pursuit of the business contemplated by this RFP.	The scope of services provided by Tyler do not include required licenses or certifications. Our proposal otherwise includes information related to certifications held by some of our personnel.	*
15	Provide all "Suspension or Debarment" information that has applied to your organization during the past ten years.	Tyler is not, and has not been over the last ten years, suspended or debarred from procurements in its various markets.	*

Table 3: Industry Recognition & Marketplace Success

Line Item	Question	Response *	
16	Describe any relevant industry awards or recognition that your company has received in the past five years	Tyler strives to provide the best client services in the industry. Our products undergo testing by trained quality assurance and certified usability analysts; therefore our clients benefit from products that work logically based upon user experience and input. We also focus our implementation and support professionals on specific groups of applications so they can offer more specialized services. Our commitment at Tyler is to ensure the highest level of client satisfaction through the efforts of Tyler's most valued resource: its people. We challenge our employees to pursue new initiatives aggressively and become industry leaders in their respective fields. Tyler employs over 5,500+ individuals, many of whom are seasoned professionals with unique and proprietary skills and years of industry experience. In fact, our employee turnover rate is very low—in recent years, about half of the industry average. Company Recognition Tyler Technologies has earned the reputation as an industry leader based on our products and commitment to our clients. These factors, along with our financial strength and industry partnerships, have resulted in numerous accolades. Tyler has been named to the following prestigious lists alongside some of the most innovative and influential companies in the United States. Innovative and Strong: - Included in the S&P 500 (2020) - Government Technology Magazine's "GovTech Top 100 List" (2020) - ORBIE's "CIO of the Year" award (2020) - D Magazine's "CEO Financial Executives" award (2020) - Dallas Business Journal ranked Tyler's Plano office #8 in its "North Texas Fastest-Growing Public Companies" list (2017) - Forbes' "Most Innovative Growth Companies" list (2016, 2017) - Forbes' "America's Best Small Companies" list (nine times) - Barron's 400 Index ranking, a measure of the most promising companies in America (six times) - Software Magazine's "Software 500" ranking of the world's largest software and service suppliers (seven times) - Audit Integrity's "America's Most Trustworthy Companies" list (2007) Employer of Choice: - Forbes' "Best Employers for Diversity" (2019, 2020) - Forbes' "Best Employers for Women" list (2018) - Forbes' "Best Midsize Employers" list (2018) - Tyler's three Maine offices recognized as "Best Places to Work in Maine" (nine times since 2007) - The Atlanta Journal Constitution's "Top Workplaces" list (2020) - The Washington Post's "Top Workplaces" List (2020) - Dallas Morning News' "Best in DFW: Top Workplaces" recognized Tyler's Plano, Texas, office (five times) - Dayton Daily News' "Top Workplaces in the Dayton Metro Area" recognized Tyler's Moraine, Ohio, office - Tyler's Lubbock, Texas, office named to the "Best of Lubbock" list by the Lubbock Avalanche-Journal (2016 and 2017) - Detroit Free Press named Tyler's Troy, Michigan, office a top workplace (2017) - Phoenix Business Journal named Tyler's Tempe, AZ, office on Best Places to Work list (2017)	*
17	What percentage of your sales are to the governmental sector in the past three years	87% or Tyler's sales have been focused on the governmental sector in the past three years.	*
18	What percentage of your sales are to the education sector in the past three years	11+% of Tyler sales focused on the education sector in the past three years. More than 37% of all of Tyler's clients are education sector related organizations.	*
19	List any state, provincial, or cooperative purchasing contracts that you hold. What is the annual sales volume for each of these contracts over the past three years?	Tyler is associated with CES, TIPS, TX DIR, MESC. OECM, TX Buyboard, NASPO (via Carahsoft). Additional state contracts include: Massachusetts ITS42, Missouri, New Jersey, Rhode Island, Virginia.	*
20	List any GSA contracts or Standing Offers and Supply Arrangements (SOSA) that you hold. What is the annual sales volume for each of these contracts over the past three years?	Our federal division leverages GSA IT-70 which markets Tyler's Micropact solutions and our Data & Insights division has GSA Schedule 70 GS-35F-0119Y which markets Tyler's Socrata solutions.	*

Table 4: References/Testimonials

Line Item 21. Supply reference information from three customers who are eligible to be Sourcewell participating entities.

Entity Name *	Contact Name *	Phone Number *	
Brevard County Sheriff's Ofice, FL	Bob Urie - Information Technology Manager	321.607.2697	*
North Carolina Judicial Branch	Bob Fowler -Chief Business Officer	919-890-1223	*
City of Hartford, CT	Mary Pippin - ERP Manager	860-757-9430	*

Table 5: Top Five Government or Education Customers

Line Item 22. Provide a list of your top five government, education, or non-profit customers (entity name is optional), including entity type, the state or province the entity is located in, scope of the project(s), size of transaction(s), and dollar volumes from the past three years.

Entity Name	Entity Type *	State / Province *	Scope of Work *	Size of Transactions *	Dollar Volume Past Three Years *	
State of North Carolina	Government	North Carolina - NC	eCitations, eWarrants, Online Court Management System, eFiling	26 line items under 3 Suites	$30,209,174	*
State of South Carolina	Education	South Carolina - SC	Transportation – Routing and Planning, GPS, Mobile Data Terminal, Business Intelligence Dashboard	1 Suite	$14,500,000	*
Bexar County, TX	Government	Texas - TX	Online Court Management System, Civil Process Software, Probation Software, Jury Software, Corrections Software	24 line items under 5 Suites	$10,995,593	*
Dallas County, TX	Government	Texas - TX	Civil Process Software, Jury Software, Court Management System	46 line items under 3 Suites	$10,008,902	*
Franklin County, OH	Government	Ohio - OH	Appraisal Services, ePayments, ERP, Court Management Systems	4 suites	$9,415,143	*

Table 6: Ability to Sell and Deliver Service

Describe your company's capability to meet the needs of Sourcewell participating entities across the US and Canada, as applicable. Your response should address in detail at least the following areas: locations of your network of sales and service providers, the number of workers (full-time equivalents) involved in each sector, whether these workers are your direct employees (or employees of a third party), and any overlap between the sales and service functions.

Line Item	Question	Response *	

23	Sales force.	Tyler's organization is broken down into specific business units with focused and tenured sales teams successfully supporting each business unit. Sales departments are strategically structured with ample resources that focus on Tyler's existing clients and staff that focus exclusively on prospective new clients. Tyler is very proud of and benefits from its sales force being healthily tenured. This meaningfully supports the effectiveness of our sales organization, our consultative approach to selling and our clients' satisfaction when conducting business with Tyler. This undoubtedly helps to drive Tyler's client retention rate of 98%. In Tyler's largest division the average tenure of our sales team is 14 years and on average across the organization sales resources have spent 9+ working at Tyler and many have had careers with applicable experience doing business with the public sector. Additionally, one out of three of Tyler's employees has worked in the public sector. Our sales organization consists of nearly 400 resources who help to successfully operate Tyler's sales functions and support our growing customer base with knowledgeable and focus on each and every product that is purchased by our customers. Tyler product divisions are divided into seven distinct areas: Appraisal & Tax, Courts & Justice, Data & Insights, ERP, Federal, Local Government & Public Safety and five focused solution groups: Courts & Justice, Health & Human Services, K-12 Education, Public Administration and Transformative Technology. Tyler has offices across the United States to accommodate our growing employee & customer base and provide exceptional regional support for our existing clients. Tyler is headquartered in Plano, Texas. We have offices throughout the U.S., two in Canada, and one in the Philippines. With Sourcewell more recent expansion into Canada, Tyler looks to continue to build on this partnership and leverage this contract and Sourcewell's partnerships to expand business in Canada going forward. Tyler has a growing number of clients in Canada. Internal and external sales employees are cognizant of the effectiveness and purchasing vehicles and are specifically trained on the process for utilizing Sourcewell so they can provide information efficiently and effectively to our client and prospective clients. Tyler's clients have utilized the Tyler/Sourcewell contract more than any other means of cooperative purchasing, and Tyler looks to continue to grow the partnership and the volume of business that leverages this procurement method.	*
24	Dealer network or other distribution methods.	Tyler does not leverage a dealer network. We have proven success with selling direct to our customers and seamlessly integrating additional departments into each and every client relationship as customers continue their partnership with Tyler.	*
25	Service force.	Tyler actively seeks the best talent to help us implement our solutions for our clients. Our staff consists of seasoned professionals with unique and proprietary skills, and years of industry experience, who are focused on specific products and in dedicated regions. Assembling a quality project team that suits for project needs is important. Upon award of contract, Tyler assigns a project manager and quality project team to ensure your implementation success. Tyler staff perform services in a professional, workman-like manner, consistent with industry standards.	*

26	Describe in detail the process and procedure of your customer service program, if applicable. Include your response-time capabilities and commitments, as well as any incentives that help your providers meet your stated service goals or promises.	Customer satisfaction is of the utmost importance to Tyler. That's why we've designed our customer support model to ensure that issues that arise are resolved within a timely manner. Tyler provides online and continuing education resources on its support website at www.tylertech.com/client-support. Support Organization Tyler technical support is organized by business process. Our product-specific teams allow support staff to focus on a distinct group of products and services by business process so they can handle calls quickly and accurately. The support product manager is responsible for the day- to-day operations of the team and ensures delivery of exceptional technical support to our clients. The team analysts and leads are responsible for assisting the team with client issues and providing ongoing team training. Technical support specialists are responsible for diagnosing and resolving client issues in a timely and courteous manner. Contacting Us to Make a Support Request The most efficient way to reach us is to log a support request online through Tyler's online support incidents at www.tylertech.com/client-support. You can log a case for support anytime. All data is available in real-time. Your existing contact information defaults when you create a new support case. You provide: Description, Priority, Product suite, group, and module. Best practice is to enter as the product suite and to start with the application module for all issues – the application support team will collaborate with other groups as needed for resolution. The case create-form provides unlimited space for you to describe the question or problem in detail, and you can attach files or screen capture that may be helpful to support. Use the My View screen capture tool to record the issue and attach it to the support case. As you enter your request, potential solutions are offered in the Answer Panel to the right of the case entry form. If you do not find an answer while entering your request, continue with the submit. The case is routed to the team with the experts best matched to your request. Once submitted, you will receive an automated email that includes the case number for reference. A Focus on Client Success Our mission is to deliver superior service by providing a timely response, issue resolution, and operational support, resulting in a high-level of client satisfaction. Unlike some companies who outsource their application support to a third party, Tyler offers a complete solution of customer support services provided by our in-house experts. When you contact technical support, your request is responded to by a technical support specialist who begins working on the request at first contact. Every contact from you is logged into our customer relationship management system. This system tracks the history of each case, including the time of first contact, priority of the issue, description of the request, support recommendations, client feedback, and resolution. A list of cases is available in real time on Tyler's support website. Case Priorities To best assist clients, we triage and monitor cases by priority. The case priority is based on your needs and deadlines. Priority identifies the impact of the issue and sets expectations for support and for you. You are responsible for communicating the priority of the case and must contact support if the priority of an issue changes. Support resources are available 8:00 AM to 5:00 PM across four standard time zones (EST, CST, MST, and PST). Tyler has established escalation paths and severity levels that range from Critical to Non-Critical. Critical priority means an issue is severe and requires immediate resolution. A critical issue is one where there is a complete work stoppage, or a loss of multiple essential system functions for all users. Tyler aims for resolution in 1 day or less. High priority issues are ones where there is a repeated, consistent failure of essential functionality affecting more than one user, or the loss or corruption of data; your system is operational, but an essential piece of functionality is not working. Tyler aims for resolution in 10 days or less. Medium priority issues are non-severe issues that Tyler aims to resolve in 30 days or less. Non-Critical priority issues are a lower priority and you will work with Support as time permits. Tyler aims for resolution in 60 days or less. Critical Issues If you are experiencing a severe work stoppage that requires immediate resolution, you can log a critical case through the portal, or you can call Tyler's toll-free number (800.772.2260). If all technicians are on the line assisting other clients, you can press "0" to be redirected to the operator to page the team. Following-up on Open Cases You can monitor the status of an open issue in Tyler's online support incidents. In the portal, you can review support's last action on the case and enter new information to share with support. You can request an update by entering a note on the case in the portal, or by calling support and speaking with the assigned technician. Escalating a Support Case If your situation or issue priority has changed, or if you feel you are not receiving the service you need, please contact the appropriate support product manager to escalate. The manager will follow up on your open issue and determine the necessary action.

27	Identify your ability and willingness to provide your products and services to Sourcewell participating entities in the United States.	Since 1997, Tyler Technologies' singular focus has been providing software and technology services to the public sector, While this remains our focus, 2019 was a year that highlighted and amplified the multiple dimensions of our growing company. We serve multiple levels of public sector clients from local to national. The 2019 acquisition of Micropact added federal clients such as NASA and the Department of Justice to our extensive roster of municipalities, counties, state and other government entities. We engage with multiple levels of technology, from back-office systems of record that feed, access and aggregate data, to process integration with workflows across systems, to the applications that provide better access to government for community residents. We provide end-to-end software and services options designed to accommodate each client's unique situation, whether they're moving from manual processes or already engaged in advanced digital workflow. We deliver solutions in multiple ways. From locally installed, client-hosted systems to secure reliable cloud-based offerings, we facilitate hosting environments that work best for our clients. We envision a dynamic future. Our visions of helping our clients create connected communities – where data, processes, and people work together to make communities safer, smarter, and more responsive – is multilayered, with a long-term roadmap for connecting data between departments and agencies and across jurisdictions and geographical boundaries. We are accountable to multiple stakeholders, including public servants, community residents, our employees, and our shareholders, and we take our responsibilities to each of these groups very seriously. We empower the people who serve the public in multiple ways every day. Tyler's 5,500+ employees work hard every day to support our 26,000+ installations in 10,000 locations. We have public sector clients in all 50 states plus Canada, the Caribeean, Australia, Europe, and other international locations. Moreover, Tyler offers the widest range of solutions for the public sector, including: Appraisal & Tax, Civic Services, Corrections, Courts & Justing, Cybersecurity, Data & Insights, ERP Financial, Health and Human Services, Land & Official Records, Public Safety, Regulatory, School Financial, Student Information & Student Transportation. Tyler is willing and able to sell our best of breed products across the United States. We provide solutions to support all sizes of entities in the public sector and pride ourselves on providing unparalleled support to each and every customer with a growing array of support services to ensure that our clients' needs are met expeditiously and resolved quickly. This is appreciated by our clients and supports our client retention rate of 98%.
28	Identify your ability and willingness to provide your products and services to Sourcewell participating entities in Canada.	Tyler's EnerGov, MyCivic, Socrata, Versatrans, Odyssey and iasWorld products are all sold in Canada with dedicated sales resources focusing on this market and continuing to build market share. Specific to Tyler's A&T division , Tyler's experience is both deep and broad in terms of its footprint within Canada. We have been providing property assessment solutions to the Canadian market since 1992, starting with the Province of Nova Scotia. The Province of Newfoundland initially installed the Tyler solution in 1998. Along with these longtime clients, Tyler is currently in the process of implementing the iasWorld CAMA solution for British Columbia Assessment (BCA). BCA is widely regarded as one of the most advanced assessment agencies in the world, assessing nearly two million properties with a total assessed value nearing $1.3 trillion. BCA selected Tyler's iasWorld after a competitive review process to help improve assessment quality, reduce operational and overhead costs, enhance data flow between agencies and improve employee productivity. In addition, Tyler is currently implementing the iasWorld solution in the City of Calgary. The City chose Tyler's iasWorld solution due to our experience in Canada, our appraisal expertise, the overall financial strength of the company, and our singular focus on the public section. Tyler is supporting the City of Calgary's vision of becoming a leading annual market value assessment jurisdiction.
29	Identify any geographic areas of the United States or Canada that you will NOT be fully serving through the proposed contract.	Tyler is intent on marketing it's software & service solutions across all states in the US and across Canada.
30	Identify any Sourcewell participating entity sectors (i.e., government, education, not-for-profit) that you will NOT be fully serving through the proposed contract. Explain in detail. For example, does your company have only a regional presence, or do other cooperative purchasing contracts limit your ability to promote another contract?	Tyler provides solutions predominantly to Schools, Cities, Counties, Special Districts, States and Federal Organizations and is intent on maketing its solutions to these organizations across all of Sourcewell's applicable entity sectors.

31	Define any specific contract requirements or restrictions that would apply to our participating entities in Hawaii and Alaska and in US Territories.	There are no restrictions on Tyler's ability to conduct business in Hawaii, Alaska, or other US territories.	*

Table 7: Marketing Plan

Line Item	Question	Response *	
32	Describe your marketing strategy for promoting this contract opportunity. Upload representative samples of your marketing materials (if applicable) in the document upload section of your response.	As a proud Sourcewell partner, Tyler Technologies actively embraces and promotes this partnership to our clients and prospects. Tyler's broad portfolio of solutions empowers the public sector to deliver quality and efficient service to their constituency — through software that provides greater transparency and accessibility, sustainable office practices, and secure data that is easy to manage and maintain. Through our Sourcewell partnership, we can deliver on this mission one step further by helping the public sector make critical software procurement decisions while reducing stress and allowing them to find a solution at the most competitive price point. To drive awareness of the Sourcewell agreement, we have strategically integrated the partnership into our corporate marketing strategy in several ways, including the following: • Tyler has developed multiple collateral resources that speak to the advantages of using Sourcewell as a procurement tool. Our Tyler Technologies Sourcewell Flyer lives in our customer-facing resource center on Tylertech.com. We've also created a brochure titled "Making the Right Long-Term Decision: A Six-Step Approach to Purchasing New Technology" which discusses the various ways agencies begin the procurement process, which speaks to utilizing a purchasing agent like Sourcewell to help save significant time, paperwork, administration fees, and legal costs. Our Munis ERP Case Study directly references the benefits of using a Sourcewell contract in the words of Tyler's client the city of Redding, California. All these resources are available on our website Tylertech.com, but are also Google indexed, making them accessible to anyone looking for resources on these subjects or active keywords. • Our Tyler Technologies Sourcewell Flyer is also available in our sales enablement platform which enables our marketing and sales organization to send important decision-making assets to prospects and clients. • Tyler promotes Sourcewell at hundreds of trade shows nationwide every year, including industry-leading events like GFOA, where our Sourcewell banner is placed proudly in our Tyler-branded booth. Because the Sourcewell brand is so highly regarded within the public sector, this helps strengthen the brand identity of both Sourcewell and Tyler in the eyes of public sector decision makers and allows them to feel confident in the value they are receiving in the partnership. • Tyler's annual Connect client user conference draws over 6,000 government officials and decision makers in attendance. Tyler offers Sourcewell access to our Connect conference, a valuable opportunity to interact with and promote to Tyler's client base. In continuing the partnership, Tyler is open and willing to explore further opportunities where the brand missions align, including: • Upon award of contract, Tyler will produce and distribute a press release to all pertinent media outlets, and the news will be amplified via our social media channels. • Once a year, Tyler will create a thought leadership piece on the significance, benefits, and value of cooperative procurement agreements. This piece will be stored in the resource center on Tylertech.com and will be amplified via social media channels. • Tyler will continue to integrate mentions of the Sourcewell partnership into existing collateral and presentations, further promoting the partnership to both clients and prospects during webinars or in product collateral. • Tyler will incorporate Sourcewell branding into our virtual trade show exhibitor booth at various events throughout the year. When we can attend events in-person, we will incorporate the Sourcewell banner into our booth design where applicable.	*
33	Describe your use of technology and digital data (e.g., social media, metadata usage) to enhance marketing effectiveness.	As part of our corporate marketing strategy, Tyler Technologies is active on social media platforms including Twitter, LinkedIn, Facebook, and Instagram. We strategically use each platform to amplify key corporate messages through mediums like blog posts, press releases, and downloadable assets as links with UTMs. Digital marketing is a priority at Tyler Technologies, and we continue to grow our influencer network to include key partners and influential voices within our industry and verticals. Tyler is consistently featured prominently in industry and mainstream publications that reach decision makers in target markets. Tyler Technologies and Sourcewell, in this partnership, can leverage and amplify each other's industry expertise on social media, in print, and on digital platforms to hit all prospective audiences.	*

34	In your view, what is Sourcewell's role in promoting contracts arising out of this RFP? How will you integrate a Sourcewell-awarded contract into your sales process?	With a continued partnership, Tyler will look to Sourcewell to continuously market the value of their program and the applicability of cooperative procurement to their customer base. Sourcewell should continue to elevate their image in the marketplace, attracting valuable prospects for both brands, through opportunities like trade shows and events. Tyler reps propose usage of the Sourcewell contract when clients are intent on purchasing from cooperative vehicles for procurement of their software and services. Usage volume of the Sourcewell contract exceeds that of all other contracts and our clients appreciate the expeditious process and ease of use of the contract.	*
35	Are your products or services available through an e-procurement ordering process? If so, describe your e-procurement system and how governmental and educational customers have used it.	Tyler provides e-procurement solutions to its clients. Tyler's eProcurement solutions increase efficiency by streamlining the purchasing process, resulting in shorter processing times. The easy flow of information and the ability to customize processes ensures purchasing requirements and needs are met while improving the organization's purchasing power. Tyler has provided an eprocurement punch-out to vendor-hosted websites in Tyler's Munis Purchasing and Requisition applications. This makes Munis eProcurement even more useful. Vendor punch-out allows for online shopping on a vendor's website which can be accessed and launched directly from the Munis Requisition application. When accessed, Munis users can shop the vendor's website, creating a virtual shopping cart of items. For example, a Munis user shops on the Staples.com website and builds a shopping cart of items. Once shopping is complete, the virtual shopping cart of items is instantly transferred to Munis and automatically populates a Munis requisition. Once the virtual shopping cart has been transferred to a Munis requisition, the regular Munis requisition process will be enforced. This includes allocating the requisition line items to GL accounts, checking and enforcing available budgets, following Munis requisition workflow and eventually converting to a purchase order. Once a purchase order has been created, sites have the optional functionality to electronically submit the created purchase order to the vendor. Currently, Tyler's own products currently are not offered via an e-procurement ordering process but Tyler is continually looking for ways to improve processes and methods for purchasing Tyler's products. The purchase of Tyler's software and service solutions is a consultative process which involves working with our customers to determine their needs and determining how best they can utilize Tyler's solutions to optimize business at their organization's operations. Tyler has a long history partnering with Sourcewell to improve procurement timelines to provide best in class software and services to the Public Sector.	*

Table 8: Value-Added Attributes

Line Item	Question	Response *	
36	Describe any product, equipment, maintenance, or operator training programs that you offer to Sourcewell participating entities. Include details, such as whether training is standard or optional, who provides training, and any costs that apply.	Everyone's learning style is different. That's why Tyler offers several training formats to accommodate our diverse clients' needs. Training by Tyler staff provides hands-on learning in your own labs. Your resources receive consultative knowledge transfer sessions that are a combination of lecture and hands-on education, using your organization's own data. Tyler believes in a train-the-trainer approach to implementation. This approach allows your resources (i.e. power users and functional leads) to be involved in the initial training and software configuration while limiting the amount of time that end users are involved in the project. The power users and functional leads are then involved in training the end user community after all configuration is complete, which helps to increase adoption, solidify knowledge transfer, and lessen resistance to training and process changes. A mutually developed education plan lays out the process of transferring knowledge between you and Tyler. The purpose of the education plan is to: • Communicate the process to stakeholders and functional leaders • Answer specific questions (where classrooms will be established, what database environment will be utilized, etc.) • Establish action items and link project personnel as owners • Define measurement criteria to ensure the plan has been successfully followed Your organization is set up for success with Tyler's train the trainer approach to training and education plan developed over years of industry experience. Additionally, we do offer Tyler-led end user training for circumstances where the train the trainer approach is not feasible. You may contact us at any time for training on future functionality, train new users, or refresh knowledge; However, your team will have access to the tools and services designed to support your internal training leads - TylerU, Tyler Community, client support, state user groups, annual user conference, KnowledgeBase and online help. More information on these resources is provided below. Tyler has a longstanding track record delivering virtual implementation services. With our strong virtual capabilities, Tyler has adjusted to the current Covid-19 climate. Tyler plans to continue to deliver all training virtually, including Go Lives, until health and travel conditions stabilize. Please visit our Virtual Munis Implementations homepage for additional information regarding our proven success delivering this model. At this time local, state, and federal governments within the United States (US) are limiting travel within our borders and abroad. When the local and state governments start lifting restrictions, we will evaluate each project and determine which, if any, sessions cannot be delivered effectively and efficiently through virtual consultation, and only those sessions will be	

		considered for travel. Tyler's standard approach, under normal circumstances, is to conduct roughly 25% of all project days on-site in your facilities. A typical day of training is from 9:00 to 4:30 (or 8:30 to 4:00), allowing for a break for lunch and short breaks in the morning and afternoon as needed. We've found that allowing users time to return to their daily responsibilities before and after classes or sessions allows for more productivity during the session. It also allows the Tyler Implementation staff time to prepare upon arrival and follow-up afterward. The start and stop times for the training will be discussed and agreed upon by Project Management during the planning portion of the project and will be published as standard session times throughout the project. Class size should be limited to twelve (12) users in attendance to the training is critical to gain hands-on experience with the system. Both teams collaborate on all aspects of training, discussed, and documented during the planning stage of the project. The expectation is for Tyler to provide one or more occurrence of each scheduled training. You will be responsible for the logistics of the training by completing such tasks as scheduling resources and ensuring facilities are available. These sessions are to be attended by your key staff members (i.e. functional leads and power users) so that they can then disseminate the information they learn to others in your organization if or when necessary. Our mission is to deliver superior service by providing a timely response, issue resolution and operational support, resulting in a high-level of client satisfaction. Unlike some companies who outsource their application support to a third party, Tyler offers a complete solution of customer support services provided by our in-house experts. Transparency is important, that's why every support incident is logged into Tyler's Customer Relationship Management System and given a unique incident number. This system tracks the history of each incident and each incident is assigned a priority number, which corresponds to your needs and deadlines. Clients can track the progress of these incidents online using Tyler's support portal. Tyler provides online and continuing education resources for our clients, including but not limited to the following resources. • Tyler Search – an online query tool that provides answers for your questions by culling through all Tyler's online resources using Knowledge Centered Service • Tyler Knowledgebase- a documentation library in a single, easily accessible location • Tyler Community – Tyler's online forum available 24/7 • Tyler University- Tyler's e-learning solution to enhance support and training of your employees using your data • Tyler Release Management Console- Shows all release version information, with a summary of each release and associated enhancements, open, closed and non-critical issues • Online Help- context sensitive field help and procedural information to assist your team in completing program tasks • Answer Panel- As you begin entering your case details, Tyler Search presents results in the panel that matches your question. Answers provided are the most relevant to your question, regardless of the source of the information. • MyView- MyView is a screen capture tool to give Support more information to assist clients with a case. The recording is linked to the case and visible in the Online Support Incidents portal. • Online Support Portal- log or manage incidents and attach documentation and screenshots • GoToAssist & Bomgar- remote assistance from Support used to connect to your desktop • Phone- Tyler provides a dedicated 800 number that places no limits on who from your team may contact Support, or the number of calls placed • State User Groups – forums organized by Tyler staff and attended by existing clients to get the latest information on Tyler products • Annual Conference – Tyler Connect features online courses taught by Tyler subject matter experts hosted in a different city each year
37	Describe any technological advances that your proposed products or services offer.	Tyler is committed to providing the best software and services to the public sector. Tyler separates our research and core development groups to ensure that Tyler remains focused on the needs of existing customers while also envisioning and executing on what our prospects will expect from our products and services in the future. Our evergreen philosophy ensures we continually provide returns on our clients' investment by refreshing the features and their underlying technology in a planned and non-disruptive approach. Our ultimate goal is for our software to be the last software license you purchase or lease. Tyler is the industry leader in this space and all efforts are geared towards increasing that leadership position. One question codifies our position, "If our clients were to re-enter the market looking for a replacement solution would the most likely outcome by them purchasing our product?" Our 98% retention rate and market leading selection rate are the metrics we use to measure the answer to this question. Providing ever increasing value for your maintenance dollars is the goal. Tyler values the importance of choices to our clients and is the only pure public sector provider that provides deployment options spanning on-premises, virtualized our hosted in our private cloud. Tyler also supports your right to choose the timing your upgrade so it makes sense operationally and provides tools such as Managed Internet Updater, Tyler Upgrade Assistant, Tyler University eLearning, Release/Defect Transparency Tool, Tyler Community, and Tyler Client Portal to help you not only make this decision but also prepare for it. AREAS OF FOCUS

Evergreen Philosophy

As we continuously refresh our features and their underlying technology in a planned and non-disruptive approach, we provide our product upgrades free with an annual maintenance agreement. This ensures that our clients always have the latest technology.

Consumer grade User Experience

Tyler's products are designed and developed by industry experts solely focused on the public sector. This includes a conscious focus and direction that ranges from usability studies and design by our in-house experts certified by Human Factors International, to User Group and client feedback. We've reached a tipping point, for the first time in decades Baby Boomers are outnumbered in the workforce by Generation X and Millennials. Community and School Leaders of tomorrow will never remember a time when technology was not a part of their everyday lives. These generations think definitely and expect to be able to pick new systems up and make them work much like downloading a new app on their phone. Our experts understand this and are working on solutions that meet these expectations.
Getting the Technology to where the work happens
Too often today technology is used as a "back-office" system of record than an enabling tool that improves efficiency. Tyler understands this and is the only sole-focused public-sector/education solution that is predominantly based on HTML5. This allows access to the application on any device that can interpret HTML5. We also understand that workers can no longer be tied to their desk in order to work with the system. They go to meetings, conferences and other work related travel where they need system access in order to keep up with their work. Tyler delivers this through responsive solutions that are optimized for mobile form factors like tablets and phones eliminating the need for something to "wait until I get back to my desk."

RECENT ADVANCEMENTS / PRODUCT PLANS

Business Intelligence

Both Microsoft and Tyler understand business intelligence (BI). What's more, we understand that the public sector needs sound reporting options from their ERP system, and a viable means to display different views of their data quickly and easily. Together, and through the use of the widely-familiar Microsoft Excel, Tyler applications offer versatile BI and reporting solutions. Using Microsoft Services, users can use the available, pre-developed application-specific "cubes" to report on key applications areas. These cubes then let users to easily select, slice, drill into, organize, and report on exactly the data they need, in meaningful spreadsheet, chart, and graph formats.

SaaS

The SaaS model is unique and powerful in its ability to meet a variety of end-user needs. Tyler's SaaS solution allows organizations to utilize software that is hosted and administered by Tyler Technologies at a remote data center—over an Internet connection via a dedicated Virtual Private Network (VPN). With SaaS users receive built-in disaster recovery services including backup and storage of all system, data and image files in a secure off site location. This reduces their concerns about potential hardware failure, a failed or forgotten backup, or damaged and/or lost data due to a natural disaster.

Technology

Technology evolves along with our clients' needs. We continually research and test our technology delivery processing and storage methods to ensure our clients have the right tools to do their jobs quickly and efficiently. We do this by adding or enhancing hardware and software to streamline processes and provide a richer, deeper experience. Tyler will continue to provide our clients with the proper tools that meet their unique needs for each solution -- looking to customer feedback to create and enhance our solutions to better fit the needs of the public sector.

HTML5

Many of Tyler's web based solutions have been to HTML5, enabling a consistent and versatile deployment on computers and mobile devices alike.

Security

We continually work toward embracing the latest industry and cloud standards in order to ensure a reliable set of practices and controls are in place to protect your proprietary data.

Working with Geospatial Data

Tyler applications are designed to help you meet your ultimate goals of guiding orderly growth, promoting safety and livability, fostering economic vitality and encouraging community

		collaboration. The future direction for Tyler software leverages the latest web technologies, spatial capabilities and industry standards while remaining focused on your goals to help you attain the success you require. Long Term Considerations We've built our reputation by successfully serving thousands of clients for decades, providing industry knowledge with a professional team of experts, and committing to long-term investments that focus on our products and services. Guided by our vision to create solutions that are productive, integrated, flexible and efficient, our direction is clear: we will invest in remarkable applications, greater user experiences, and leading technology for robust, efficient management and delivery of our solutions. Going forward we will remain true to our mission statement of empowering people who serve the public, in order to make ongoing strategic investments	
38	Describe any "green" initiatives that relate to your company or to your products or services, and include a list of the certifying agency for each.	Tyler has built its brand by delivering value for clients, creating a strong workplace culture, ensuring transparency in our operations, and empowering strong, vibrant communities. We take great pride in the Tyler brand and what it stands for. Respect for the environment is more than a mindset; it requires real investment and focus. In 2019, we continued to make meaningful changes to our operations, infrastructure, and product offerings to better conserve natural resources and address environmental concerns at global and local levels. With approximately 5,350 team members in 2019 spread across 35 office locations, we appreciate the significance of our footprint. Our office locations represent cities and towns from coast to coast, as well as international locations. In addition, our products are in use at more than 10,000 client sites across the public sector, greatly extending the reach of Tyler's environmental impact. Our software is designed to increase efficiency throughout our clients' organizations, with many of our electronic solutions producing a dramatic reduction in fuel use and paper waste. In 2019, our electronic filing solution helped our clients save nearly 2.3 million pounds of paper, the equivalent of more than 25,000 trees. Through the use of document management tools with embedded workflow to reduce paper usage, we have helped save approximately 35,000 pounds of wood, 95,000 gallons of water, 80,000 pounds of carbon dioxide, and 5,000 pounds of waste. Environmental programs and policies in place across Tyler's major offices include: • Installation of motion sensors and energy-efficient lighting for interior and exterior spaces • Use of building automation systems (BAS) to manage power usage • High-efficiency heating and air conditioning systems • Installation of low-flow plumbing fixtures • Commercial recycling programs • Extensive use of document management tools with embedded workflow to reduce paper usage Additional environmental programs at select Tyler office locations include: • Installation of solar panels, energy-efficient windows, and additional insulation • Incorporation of LEED standards into building improvements and new construction • Office green teams • Use of recycled and compostable paper products in cafeterias and breakrooms • Use of natural aquifers for corporate campus irrigation • Fuel-delivery service with carbon-neutral fleet to reduce carbon dioxide emissions and groundwater contamination	*
39	Identify any third-party issued eco-labels, ratings or certifications that your company has received for the equipment or products included in your Proposal related to energy efficiency or conservation, life-cycle design (cradle-to-cradle), or other green/sustainability factors.	Tyler products assist their clients with amassing date, formulating decisions and validating results in areas of results. One major focus area of conservation in the reduction of printed paper usage. With Tyler's content management, data & insights solution, online workflow and mobile solutions, there is significantly less reliance on the necessity for printed content which saves money and provides measurable efficiencies.	*
40	Describe any Women or Minority Business Entity (WMBE), Small Business Entity (SBE), or veteran owned business certifications that your company or hub partners have obtained. Upload documentation of certification (as applicable) in the document upload section of your response.	Tyler has previously worked with these type organizations to meet agency needs and requirements and successfully complete awarded projects. Tyler would not be applicable for these certifications.	*

41	What unique attributes does your company, your products, or your services offer to Sourcewell participating entities? What makes your proposed solutions unique in your industry as it applies to Sourcewell participating entities?	We imagine that many of the solution providers evaluated by Sourcewell will have overlapping product and service offerings, but how many can say that they are solely focused on the public sector? Just one. Tyler – It's all we do. Our expertise in this area allows us to provide quality products and customer service that are in line with most needs in public sector software. Not to mention, many of our employees came directly from public sector roles – meaning our products are designed and supported by the people who know what the public sector needs. Solution areas: - Appraisal & Tax - Civic Services - Corrections - Courts & Justice - Cybersecurity - Data & Insights - Disability & Benefits - ERP - Land & Official Records - Productivity Tools - Public Safety - Regulatory - School ERP - Student Information - Student Transportation When you purchase software solutions from Tyler, you aren't just getting the latest software as of the date you sign your contract. You are also getting the benefit of perpetual upgrades as they happen. We deliver this without additional license fees. Both on-premises and SaaS clients receive new releases and upgrades for the life of their maintenance or subscription agreements. Our products are continually enhanced through a process of perpetual upgrades. This steady stream of significant yet manageable changes is deployed with minimal disruption to your operations. Our evergreen philosophy is a commitment to our clients. • Your investment in our products is long term. • Your product will continue to evolve and remain a market leader. • We are continuously enhancing our products with underlying technology. • We are constantly adding new features, adding value and increasing efficiency in the public sector workplace. One of our core values is community, that's why we've created many spaces, digitally and in-person, to better connect our client base with each other. Resources like our online Tyler Community platform, annual Tyler Connect user conference, and product specific state user groups meetings allow clients and staff to gather, learn, and collaborate on a variety of topics and initiatives. Each year thousands of clients come to learn about Tyler, our products, and to connect with peers and staff. This premier event helps clients get the maximum use of their Tyler software. You learn more about existing or proposed functionality through dozens of classes over several days. Development product managers attend the event to share their plans for the next upgrade and to solicit feedback from clients. Our clients' input from past conferences continues to significantly impact the direction of software enhancements and changes. Client attendance each year ensures that appropriate needs are reflected in product development strategies. Connect is held in different locations every year to accommodate our geographically diverse client base and to provide fresh and exciting activities for our clients outside of the classes and labs. Tyler is proud of the tenure of our employees. Many employees have come directly from the public sector or have worked in roles at Tyler like implementation and support that provides them with firsthand experience and knowledge of what the public sector needs. This experience paired with the extensive hands on training provided makes our in-house experts excellent resources for our clients to rely on during implementation and beyond.

Table 9: Warranty

Describe in detail your manufacturer warranty program, including conditions and requirements to qualify, claims procedure, and overall structure. You may upload representative samples of your warranty materials (if applicable) in the document upload section of your response in addition to responding to the questions below.

Line Item	Question	Response *	
42	Do your warranties cover all products, parts, and labor?	Tyler warrants its software and services as indicated in the software and services agreements included with our proposal. With few exceptions, Tyler does not warrant hardware or other 3rd party products but passes through those warranties to Participating Entities.	*
43	Do your warranties impose usage restrictions or other limitations that adversely affect coverage?	Our software warranty requires clients have an active Maintenance or SaaS agreement.	*
44	Do your warranties cover the expense of technicians' travel time and mileage to perform warranty repairs?	Tyler software warranty support is provided remotely If we need to travel to a client site for warranty support, it will be at no charge to the client unless the onsite trip is caused by the client's failures to perform under the agreement. Warranty coverage for third party products and services is subject to the suppliers' terms.	*
45	Are there any geographic regions of the United States or Canada (as applicable) for which you cannot provide a certified technician to perform warranty repairs? How will Sourcewell participating entities in these regions be provided service for warranty repair?	We can provide warranty service for our software and services throughout the United States and Canada. As noted above, warranty coverage for third party products and services is subject to the suppliers' terms	*
46	Will you cover warranty service for items made by other manufacturers that are part of your proposal, or are these warranties issues typically passed on to the original equipment manufacturer?	With very few exceptions, we do not offer warranties for third party software, hardware, or services.	*
47	What are your proposed exchange and return programs and policies?	Tyler Software: So long as the client has an active software maintenance or SaaS agreement, Tyler will cure Defects in its software, as defined in the applicable agreement, in accord with the applicable support call process. Tyler Services: In the event Tyler provides services not in accordance with appliable industry standards, Tyler will reperform those services at no additional cost to the client. 3rd Party Products: Warranty and exchange policies are determined by the applicable supplier and/or manufacturer. Tyler will reasonably coordinate support and warranty claims for 3rd party products resold by Tyler.	*
48	Describe any service contract options for the items included in your proposal.	Tyler does not warrant hardware or other 3rd party products but passes through those warranties to Participating Entities. Extended warranties can the leverage through 3rd Party providers.	*

Table 10: Payment Terms and Financing Options

Line Item	Question	Response *	
49	What are your payment terms (e.g., net 10, net 30)?	45 days following invoice date.	*
50	Do you provide leasing or financing options, especially those options that schools and governmental entities may need to use in order to make certain acquisitions?	While we do not offer leasing or financing options directly, Tyler has occasionally coordinated client requests in order to obtain funding for their procurements. Additionally, Tyler will reasonably cooperate with clients who have exigent financial restraints in order to structure payment terms that allocate the total cost of ownership over the term of the agreement.	*
51	Briefly describe your proposed order process. Include enough detail to support your ability to report quarterly sales to Sourcewell as described in the Contract template. For example, indicate whether your dealer network is included in your response and whether each dealer (or some other entity) will process the Sourcewell participating entities' purchase orders.	Tyler sales are logged into a CRM system with . appropriate fields denoting Sourcewell related sales, that track deal progression and specifics. This database store data on all sales details and pertinent information. Reports can be generated from this system to produce the report format requested by Sourcewell.	*
52	Do you accept the P-card procurement and payment process? If so, is there any additional cost to Sourcewell participating entities for using this process?	Yes, Tyler accepts Visa/Mastercard. Charges can be five thousand dollars or less.	*

Table 11: Pricing and Delivery

Provide detailed pricing information in the questions that follow below. Keep in mind that reasonable price and product adjustments can

be made during the term of an awarded Contract as desribed in the RFP, the template Contract, and the Sourcewell Price and Product Change Request Form.

Line Item	Question	Response *	
53	Describe your pricing model (e.g., line-item discounts or product-category discounts). Provide detailed pricing data (including standard or list pricing and the Sourcewell discounted price) on all of the items that you want Sourcewell to consider as part of your RFP response. If applicable, provide a SKU for each item in your proposal. Upload your pricing materials (if applicable) in the document upload section of your response.	Tyler is providing a broad range of best in class software solutions with comprehensive service offerings to the support the successful implementation of our products and continued optimization of our solutions at client sites so that they truly benefit and empower the users, their organization and their constituencies. Tyler's remains committed to meeting the software needs of our clients and provides both on-premise and SaaS based software offerings to support their varied needs. Our subscription based software offerings made up the majority of our new contracts in 2019 and this trend will continue upwards. Tyler's subscription based pricing lowers the cost of entry by eliminating large up-front fees and spreading costs over time. Tyler can help our clients compare all software deployment options to determine what the best investment is for their particular organization. Tyler provides comprehensive enterprise software that is configured specifically for each client's unique needs. The individual line items and MSRP prices are derived from a series of proprietary calculations. All pricing proposals offered to Sourcewell members will clearly show the MSRP and the applicable Sourcewell discount. This discount is limited to Tyler Software Licenses and Tyler Software License Subscriptions (SaaS) portions of the proposal and do not apply to services, annual maintenance, custom programming, third party products and services and other components of the clients proposal that are not listed as Tyler Software Licenses or Tyler Software Subscription. Tyler has provided a pricing summary to Sourcewell that conveys the overall discount structure and pricing examples for the offerings that Tyler will be providing on the contract. Determining the needs of our customers and the software that will be suit their organization to optimize processes is a consultative process and pricing formulation is multi-factored and involves both software and service offerings. Tyler strives to work closely with all of its prospects and clients to best understand their needs and propose services and solutions to appropriately serve their needs. Tyler's quotes to our customers will clearly present the actual list price and proposed discounts that have been expressed in Tyler's proposal.	*
54	Quantify the pricing discount represented by the pricing proposal in this response. For example, if the pricing in your response represents a percentage discount from MSRP or list, state the percentage or percentage range.	Tyler will discount then-current pricing by 10% for software licenses and SaaS fees for the initial term. Tyler's Socrata SaaS product offering fees will be discounted by 5% for the initial term. This discount does not extend to services pricing, (implementation focused training, project management, product development services, service subscriptions) software maintenance, or hardware.	*
55	Describe any quantity or volume discounts or rebate programs that you offer.	Much of Tyler's pricing is based on a volume discount pricing construct. With increase in the purchase amounts of licenses or users in our subscription based pricing, the cost per license/user decreases. Client may also choose to purchase a site license for many of our subscription arrangements which allows an innumerable amounts of users access to Tyler's solution and is a appropriate and cost-savings approach for many of Tyler's clients.	*
56	Propose a method of facilitating "sourced" products or related services, which may be referred to as "open market" items or "nonstandard options". For example, you may supply such items "at cost" or "at cost plus a percentage," or you may supply a quote for each such request.	Not applicable to the products and services offered by Tyler.	*
57	Identify any element of the total cost of acquisition that is NOT included in the pricing submitted with your response. This includes all additional charges associated with a purchase that are not directly identified as freight or shipping charges. For example, list costs for items like pre-delivery inspection, installation, set up, mandatory training, or initial inspection. Identify any parties that impose such costs and their relationship to the Proposer.	Elements associated with cost of acquisition will be detailed on the quote and further supported by commentary on the quote and within the contract.	*

58	If freight, delivery, or shipping is an additional cost to the Sourcewell participating entity, describe in detail the complete freight, shipping, and delivery program.	Freight, delivery or shipping are additional costs and not covered by the Sourcewell agreement. All associated costs will be detailed in the clients proposal	*
59	Specifically describe freight, shipping, and delivery terms or programs available for Alaska, Hawaii, Canada, or any offshore delivery.	Freight, delivery or shipping are additional costs and not covered by the Sourcewell agreement. All associated costs will be detailed in the clients proposal	*
60	Describe any unique distribution and/or delivery methods or options offered in your proposal.	N/A	*

Table 12: Pricing Offered

Line Item	The Pricing Offered in this Proposal is: *	Comments
61	c. better than the Proposer typically offers to GPOs, cooperative procurement organizations, or state purchasing departments.	

Table 13: Audit and Administrative Fee

Line Item	Question	Response *	
62	Specifically describe any self-audit process or program that you plan to employ to verify compliance with your proposed Contract with Sourcewell. This process includes ensuring that Sourcewell participating entities obtain the proper pricing, that the Vendor reports all sales under the Contract each quarter, and that the Vendor remits the proper administrative fee to Sourcewell.	Tyler has a quoting tool that has been programmed to factor in automated discount minimums when sales resources are generating quotes associated with Sourcewell. There tool appropriate generates quotes that are then automatically posted in Tyler's CRM database. There is full transparency as to what was quoted for each client and quotes can easily accessed and reviewed for compliancy. In CRM all quote components can be reported and a report can be generated to pull all previous quarter activity to be reviewed and analyzed for compliancy by sales, finance and legal resources.	*
63	Identify a proposed administrative fee that you will pay to Sourcewell for facilitating, managing, and promoting the Sourcewell Contract in the event that you are awarded a Contract. This fee is typically calculated as a percentage of Vendor's sales under the Contract or as a per-unit fee; it is not a line-item addition to the Member's cost of goods. (See the RFP and template Contract for additional details.)	Tyler is proposing a 2% admin fee on contracted on-premise software licenses costs and software related SaaS fees. Tyler additionally proposes a reduction in the admin fee when contracted on-premise software licenses and software related SaaS fees exceed 500K per contract.	*

Table 14A: Depth and Breadth of Offered Equipment Products and Services

Line Item	Question	Response *
64	Provide a detailed description of the equipment, products, and services that you are offering in your proposal.	Tyler's broad solutions and product offering empowers you to deliver better and faster assistance to the public with greater transparency and accessibility, sustainable office practices, and secure data that's easy to manage and maintain. Tyler Technologies is committed to providing the best and broadest array of software and services to the public sector. Dedicated research and core development groups ensure Tyler remains focused on the needs of existing customers while also envisioning and executing on what prospects will expect from products and services in the future. Tyler's Evergreen Philosophy continually provides returns on our clients' investment by refreshing the features and underlying technology in a planned and non-disruptive approach. Tyler is please to provide to Sourcewell members a broad and comprehensive offering of Software, Services and hardware that is necessary to operate Tyler's software solutions. Our Software offerings are broken down into distinct solution groups: Appraisal & Tax: CAMA - Our CAMA software helps you manage all property data and every phase of the property appraisal process, including assessment administration, property maintenance, and valuation and appeals. Tyler additionally offers Comprehensive Tax Billing & Collection Software Product Solutions - iasWorld, Eagle Appraiser & Assessor, Eagle Treasurer, Incode

Property Tax Management, Munis Tax Billing & Collection

Civic Services

Tyler provides comprehensive business management, community development, community health, enterprise asset management, parks & recreation & Utility CIS solutions to thoroughly satisfy the needs of the public sector

Product Solutions – DHD, EnerGov, Incode Utility Billing, Munis Utility Billing CIS, Tyler 311, Tyler EAM, Tyler Parks & Rec, Tyler Notify

Courts & Justice

Tyler offers a comprehensive suite of software and services focused on Corrections and Courts & Justice

Product Solutions – Odyssey, Modria, Softcode, Tyler Supervision, Tyler Corrections, Incode Court

Cybersecurity

Tyler provides managed threat detection and complementary services to confront rising security risks in the public sector.

Product Solutions – Tyler Detect and additional services

Data & Insights

The Data & Insights division of Tyler provides the Socrata software-as-a-service (SaaS) platform, which is powered by the industry-leading Amazon Web Services (AWS) Cloud infrastructure. We also provide outstanding experience and solutions across planning, implementing, and executing Data and Performance management initiatives with international, federal, provincial, and local initiatives.

Product Solution - Socrata

ERP

Tyler provides Financial Management for Simplified Accounting Operations, Human Capital Management and Revenue Management solutions to facilitate community engagement and easy payment processing.

Product Solutions – ExecuTime, Incode, Munis, New World ERP, Infinite Visions, Tyler CAFR, Tyler Cashiering, Tyler HUB, Tyler Meeting Manger

Land & Official Records

Tyler provides robust county records management software and self-service applications for increased transparency and accessibility

Product Solutions – Eagle, Tyler Content Management

Public Safety

Tyler's Public Safety Solutions focus on Citation Management, Computer Aided Dispatch, Fire & EMS, Mobile Public Safety & Records

Product Solutions – Brazos, Incode Public Safety, MobileEyes, New World Public Safety

K-12 Education

Focused on schools, Tyler provides comprehensive ERP solutions targeted specifically at K-12 as well as robust SIS and Student Transportation solutions.

Product Solutions – Tyler SIS, Versatrans, Traversa, Munis, Infinite Visions, Incode

Transformative Technology

Tyler solutions provide a continuous spectrum of case management and business management solutions giving organizations the flexibility to commence application development initiatives from a variety of starting points.

Product Solutions - entellitrak

65	Within this RFP category there may be subcategories of solutions. List subcategory titles that best describe your products and services.	Tyler has a comprehensive offering of product solutions to service the public sector's needs. These solution are broken down into the following areas : Appraisal & Tax, Civic Services, Courts & Justice, Cybersecurity, Data & Insights, ERP, Land & Official Records, Public Safety, K-12 Education & Transformative Technology.	*

Table 14B: Depth and Breadth of Offered Equipment Products and Services

Indicate below if the listed types or classes of equipment, products, and services are offered within your proposal. Provide additional comments in the text box provided, as necessary.

Line Item	Category or Type	Offered *	Comments	
66	Enterprise resource planning (ERP) solutions	(•) Yes ( ) No	Tyler provides broad, varied and comprehensive ERP solutions for the public sector	*
67	Human resource information systems (HRIS)	(•) Yes ( ) No	Tyler provides broad, varied and comprehensive HRIS solutions for the public sector	*
68	Financial management systems	(•) Yes ( ) No	Tyler provides broad, varied and comprehensive Financial solutions for the public sector	*
69	Enterprise content management (ECM) solutions	(•) Yes ( ) No	Tyler provides broad and comprehensive ECM solutions for the public sector	*
70	Student information systems (SIS)	(•) Yes ( ) No	Tyler provides broad and comprehensive SIS solutions for the public sector	*
71	Facility management software (FMS)	(•) Yes ( ) No	Tyler provides broad and comprehensive CMMS and FMS solutions for the public sector	*
72	Court, corrections, law enforcement, or justice system software solutions	(•) Yes ( ) No	Tyler provides broad and comprehensive Courts and Justice and Public Safety related software solutions.	*
73	Municipal services, inspections, and permitting management solutions	(•) Yes ( ) No	Tyler provides broad and comprehensive solutions to satisfy the Civic Service needs of the public sector	*
74	Equipment and accessories related to the offering of systems or solutions described above.	(•) Yes ( ) No	Hardware is provided that is necessary to operate Tyler's solutions	*
75	Services related to the offering of systems or solutions described above.	(•) Yes ( ) No	Tyler offers comprehensive service offerings to support product development and implementation services to successfully implement our products	*

Table 15: Industry Specific Questions

Line Item	Question	Response *	

76	If you are awarded a contract, provide a few examples of internal metrics that will be tracked to measure whether you are having success with the contract.	Tyler has been a long time partner of Sourcewell and past benchmarks will immediately inform current contract success. As stated earlier in contract the mix of divisional usage is broadening and Tyler will continue to work to broaden divisional usage. From a operational perspective, Tyler is incredibly focused on detailed metrics that relate to our customer's satisfaction and our engagement level of support with each and every customer. Tyler conducts a number of surveys to compile and analyze data and shape ongoing improvements to it's support model. Annual Customer Satisfaction Survey –every client who has contacted us at least once in the past year receives an on-line, anonymous survey. Results are published to senior management and also reviewed at the annual user conference with clients. Remote support survey – each time we connect with a client using our remote support access tool, we ask for feedback regarding our responsiveness and knowledge for that issue. Incident Survey – We have a 3rd party survey organization who takes a sample of our daily incidents and surveys clients. They measure Courtesy, Knowledge, Timeliness Quality, and overall satisfaction. Each month we take our average monthly customer satisfaction scores and compare them to the industry average. This report gets reviewed by senior management.
77	Describe connectivity and integration capabilities between your offered solution(s) and other software systems.	Tyler solutions offer a variety of methods of interfacing with external third-party systems, including file-based import and exports and real-time web service integration through plug-and-play App Connectors, and API Toolkits and Connectors. Full Integrated Solutions When evaluating a new ERP system, it is very common clients are looking to replace several disparate systems with a single, integrated ERP solution. Since Tyler solutions are integrated with one another, many existing interfaces are commonly eliminated when moving from several disparate systems. File-based integration Multiple file-based interfaces are included, and all are integrated as part of the application, designed for end users. Unlike systems that require a database administrator to import or export data with their system, users can easily import or export data through point-and-click user interface. User-defined templates specify the data layout for a specific system, so users can quickly choose the appropriate template at the time of import/export. Templates for commonly used third-party systems are also included out of the box. File-based interfaces can be scheduled for one-time or recurring, automated processing. Many imports can be configured with Workflow to send automated notifications or approval requests before the data updates a record. Workflow business rules can be set on a variety of data conditions specific to the imported data. Only after all workflow rules are been approved does the import update production data. Depending on the process, imports can also be rejected at the item or file level; rejected imports can be resubmitted at any time. Microsoft Office Integration Tyler applications are designed to easily integrate with the Microsoft Office suite. Data can be exported to Microsoft Word directly from many Tyler applications. Some applications also leverage Word's mail merge functionality allowing users to easily create and maintain form templates for completely customized presentation of application data. Word Mail Merge exports can also be automatically archived to Tyler Content Manager for quick retrieval at any time. Applications include a variety of integrations with Microsoft Excel. Users can easily export application data directly to Microsoft Excel from most applications. Excel exports are not just raw data dumps; exported data maintains the same formatting as the application including dates and currency. Many exports include a link back to the corresponding record in application. Microsoft Excel is also one of many formats supported for bulk data exports and imports, which can be scheduled for automated processing. Finally, many Tyler applications include integration with Microsoft Exchange calendars for appointments and meetings. Email notifications and alerts can be sent using most email servers, including Microsoft Exchange . 'Plug-and-Play' Application Support Tyler solutions include plug-and-play integrations for a variety of third-party applications

		through pre-packaged web services. Tyler develops and maintains these integrations, requiring no development expertise from the client to configure. API Toolkits and API Connectors API (Application Programming Interface) Toolkits and API Connectors add value to your organization by enabling you to create your own integrations to share data between Tyler and non-Tyler applications. API Toolkits contain all exposed resources (or endpoints) available in a specific Tyler application module. API Connectors contain a subset or cross-section of API Toolkit resources with the purpose of facilitating a specific type of integration such as third-party cashiering, IVR, or applicant tracking systems. Tyler's API Developer Portal serves as a powerful RESTful API gateway that makes accessing Tyler application data and processes through Toolkits and Connectors easy and intuitive. The Portal conforms to OpenAPI 3.0 and is secured with OAuth 2.0 through Tyler Identity. API resources include example calls and produce properly formatted commands, allowing you to easily exercise them against your data. The API Developer Portal features include: • Simplified, structured API documentation • Industry standard OpenAPI 3.0 interface • OAuth 2.0 API authentication through Tyler Identity • Data models and examples for each resource • Produces HTTP URI and CURL commands to exercise resources from within the documentation and return data • Real-time validation • Standard HTTP status codes • Documentation to aid in identifying and understanding normal resources used to complete a given integration.		

78	Describe your migration, customization, and upgrade processes.	The data conversion process can be the most time-critical element of your project plan. Tyler develops crucial steps in our implementation process to support a successful data conversions plan. Our resources conduct hundreds of data conversions every year mapping legacy data through custom written programs. Your Tyler implementation team guides you through the process, starting with conversion analysis and mapping, followed by interactive data conversions and validations, and ending with final testing and loading into your production environment. Within three implementation stages, critical data conversion work packages outline the steps needed. Client technical lead(s) are responsible for exporting data from your legacy system. They present this export in the required format to Tyler's data expert(s). Tyler's data experts use custom written programs to convert your legacy data into conversion packages. Conversion passes are sent back to client conversion lead(s) for proofing, validation, and balancing. Client technical lead(s) may be re-engaged by client conversion lead(s) where necessary to modify legacy data in your current system. Once the final conversion pass is approved and signed off, it is ready to be loaded into production for processing. Data Conversion Standards & Responsibilities While Tyler's data conversions team has extensive experience with data mining, conversion, and migration, it is your responsibility to provide Tyler with readable conversion data and to review the converted data for accuracy and completeness. Tyler recommends that you conduct due diligence to ensure that your team delivers clean data, to make data validation efforts seamless resulting in a high-quality migration. Customization Client feedback is essential to Tyler and we value our clients time and effort to documenting suggestions. Every year the Munis product incorporates more than 1,000 specific functional enhancements. Your suggestions are the driving force behind these changes. While some modifications are determined and scheduled at the time of contract signing, more commonly, additional ideas and needs may become evident as users utilize the software during implementation and beyond. Tyler offers two options for clients to voice their product feedback: (a) client product suggestions, and (b) requests for quotes. Upgrades Upgrades occur periodically and are initiated by the client at any time via the Internet through a process called Live Update, making the process as convenient as possible for our clients. Patches and fixes are provided to the client through Live Update as well. Our evergreen development philosophy has been a strong differentiator that separates us from our competitors and provides a significant cost savings to our family of clients. Through evergreen, our clients receive the latest technology developments, releases, and updates without paying additional license fees – for the life of their Tyler product. While this has provided our clients with a return on investment that is unrivaled in our industry, the frequency and complexity of software releases can sometimes create a consumption gap for our clients. The gap exists when new features are released and, over time, users don't learn and apply these features to their work environments. EverGuide® is a Tyler-wide continuous improvement initiative to address the consumption gap. With EverGuide, our goal is to help our clients continue to grow and evolve their use of the functionality and enhancements of their Tyler product over time. Through our EverGuide initiative, we will: • Help clients better leverage product enhancements • Provide a workflow "maturity model" for clients to follow • Offer strategic planning services and training resources • Offer a client executive program to help clients build and implement a continuous • improvement plan • Provide domain expertise, with defined integration points and common support methodology
79	Describe your data integrity and protection standards, data backup, recovery and secure storage solutions.	Tyler applications use a combination of database constraints and robust application level business logic to ensure data integrity. Due to the integrated nature of Tyler applications, single "master records" are shared across multiple products. This ensures one data record is maintained across multiple applications, eliminating the need to "sync" or manually entering duplicate data in multiple areas. Most data entry involved choosing records from pre-defined tables maintained by application administrators rather than entering data free form. Tyler applications follow best practice database rules for transaction rollbacks. Any in-flight transactions that are interrupted between a begin work and commit work, will roll back to the previous commit.

Tyler Security Controls

Tyler employs a full-time application security team dedicated to continuously reviewing and enhancing the security posture of Tyler's products. Tyler uses enterprise level dynamic and static security scanning tools as part of our software development life cycle. In addition to scanning tools, Tyler's application security team executes manual assessments on all products using a testing methodology based upon the OWASP Testing Framework.

Application Security Controls

In-transit application data is encrypted over HTTPS and at-rest data encrypted through storage array level encryption.
Tyler applications require end-user authentication through Active Directory or application accounts, and employ a comprehensive Role Based Access Control (RBAC) security model. Integrated RBAC controls facilitate the management of application access through groups of permissions - roles - and assigning those roles to any number of users. This allows administrators to maintain access for multiple users who may share common responsibilities simultaneously rather than on an individual, user basis.
Roles can be created and customized to offer an extremely flexible level of access control within each application suite. This includes product, module and menu item access (i.e. what programs can users open), functional access (i.e. what processes can users perform) and finally, record-based and, where available, field level access (i.e. what data can users see). Role permissions can also span multiple modules within each application providing easy administration for those individuals who may "wear multiple hats". If overlapping or conflicting permissions are applied to a user, the highest priority / least restrictive access is granted to that user.
Once application roles are created, user accounts are added to the system, either manually or imported from Active Directory and roles are then assigned to a user, providing access to the system. All of this is done using easy-to-use, integrated applications, requiring very little technical expertise.

Administrative Security Controls

Tyler's Human Resource department follows standard recruitment, hiring, and termination processes. Every employee is subject to a background check prior to hire. Upon hire, all employees are required to sign an employee handbook acknowledgement, which includes security policies, and sign a confidentiality/non-disclosure agreement. All employees must complete and acknowledge corporate security awareness training annually.
Tyler implements a role-based access control methodology to ensure only authorized people with a need for access are given it. To the extent Tyler users have access, Tyler employs a least-privileged access strategy, meaning that individuals are given and use only the least administrative rights possible to do the task at hand. Tyler compliments these strategies with controls and monitoring to ensure only those authorized users can access the systems allowed.

Tyler SaaS Hosting Security Controls

Tyler SaaS Hosting Operations employ best practice security controls and are subject to annual assurance audits. Audits include SOX-404 Financial and IT General Control conducted by an independent CPA firm, SOC 1 Type 2 and SOC 2 Type 2 conducted by an independent AICPA firm, and PCI Security Council PA-DSS and PCI-DSS validation for Tyler's payment and payment gateway applications.

Physical Security Controls

Using proximity key card entry systems and cameras, access to Tyler SaaS data centers is restricted to authorized personnel only. Data center entry attempts audited regularly by internal staff and external auditors. Tyler hosting services also include a dedicated Network Operations Center (NOC) for 24x7 monitoring of system utilization and network activity.

Technical Security Controls

Tyler SaaS employs a variety of industry-standard solutions for monitoring and intrusion detection and prevention. Firewalls include Intrusion Protection System (IPS) modules to detect and prevent intrusions. A variety of routine scans are performed regularly including vulnerability scans, anti-malware monitoring, external penetration tests, and static and dynamic security scanning. Tyler also leverages a third-party service for DDoS detection and mitigation.

On-premises Hosting

Tyler applications are based on industry standard technologies, supported in a variety

		of deployments. Tyler recommends any industry standard third-party backup solution to manage on-premises backups. Backup procedures can be customized to the clients' expectations of recovery and down time in the event of a disaster. Tyler Disaster Recovery Services for On-premises Hosting Tyler Disaster Recovery Services is an optional disaster recovery (DR) service for on-premises hosted clients provided by Tyler Technologies. This service ensures continued access to client hosted Tyler product data in the event of a natural or man-made disaster. Tyler Disaster Recovery Services takes nightly backups of your organization's Tyler product data and, in the event of a disaster declaration, works in conjunction with Tyler Hosting Services to create a temporary hosted environment that can be accessed remotely throughout the disaster event, minimizing lost operating time. Tyler SaaS Tyler maintains two primary datacenters for hosted customers. One is owned by Tyler, located in Yarmouth, ME, and the other is a colocation facility, DataBank, located in Dallas, TX in the old Federal Reserve Building, originally built to withstand a nuclear disaster. Tyler SaaS data centers are built around enterprise compute systems running virtualized Windows Server and SQL Server environments. Three Tiers of storage are utilized providing varying levels of performance resiliency. Firewalls, routers, and storage are all setup in a highly available configuration. Tyler data centers are serviced by multiple power providers and include backup power in the event of power loss from all power providers. Multiple internet service providers are employed across multiple hub sources bandwidth is drawn from different hub locations and to mitigate the risk of a data center Internet outage. Data center servers, HVAC units, and smart devices on cabinet power strips all have the capabilities of notifying appropriate personnel of events such as power outages, server over-heating, humidity, and room temperature abnormalities. Full server snapshots are performed daily after normal business hours. Through the Tyler SaaS Cloud Admin Portal, clients can also create on-demand application database backups at any time. Clients can request data restored from backups as defined through application-specific retention policies. Data is replicated between each data center nightly using an enterprise backup solution through virtual infrastructure snapshots. Tyler employs a documented Disaster Recovery Plan which is tested annually, and backup restore tests are performed weekly. Guaranteed recovery point objective (RPO) and recovery time objective (RTO) are 24 hours with standard services. Business continuity options with lower RTO and RPO are available for an additional fee.	
80	Describe your strategy related to implementation, integration and use of installation partners.	Tyler utilizes its depth of implementation experience, working in tandem with our clients to put our methodology into practice. While each Project is unique, all will follow Tyler's six-stage methodology: Initiate and Plan, Assess and Define, Prepare Solution, Production Readiness, Production, and Close. Each of the six stages is comprised of multiple work packages, and each work package includes a narrative description, objectives, tasks, inputs, outputs/deliverables, assumptions, and a responsibility matrix. Tailored specifically for Tyler's public sector clients, the project methodology contains Stage Acceptance Control Points throughout each Phase to ensure adherence to scope, budget, timeline controls, effective communications, and quality standards. Clearly defined, the project methodology repeats consistently across Phases, and is scaled to meet the Client's complexity and organizational needs. The methodology adapts to both single-phase and multiple-phase projects. To achieve Project success, it is imperative that both Client and Tyler commit to including the necessary leadership and governance. During each stage of the Project, it is expected that Client and Tyler Project teams work collaboratively to complete tasks. An underlying principle of Tyler's Implementation process is to employ an iterative model where Client's business processes are assessed, configured, validated, and refined cyclically in line with the project budget. The delivery approach is systematic, which reduces variability and mitigates risks to ensure Project success. As illustrated, some stages, along with work packages and tasks, are intended to be overlapping by nature to, efficiently and effectively complete the Project. Tyler has vetted third parties we partner with to enhance our client experience. Unless otherwise stated all installation and services are provided by Tyler staff.	*

81	Identify any mobile applications available for your offered solutions, if applicable.	Tyler provides web-based platform agnostic solutions, offering end-users with on-the-go access from virtually anywhere. Responsive web applications automatically orient screen layout for optimal user experience, whether accessed from a desktop monitor or mobile device. Tyler also offers a variety of native mobile apps to better leverage device resources such as GPS or camera and integrated store-and-forward functionality allow using apps without a data connection and automatically syncs when back online.	*

Exceptions to Terms, Conditions, or Specifications Form

Only those Proposer Exceptions to Terms, Conditions, or Specifications that have been accepted by Sourcewell have been incorporated into the contract text.

Documents

Ensure your submission document(s) conforms to the following:

1. Documents in PDF format are preferred. Documents in Word, Excel, or compatible formats may also be provided.

2. Documents should NOT have a security password, as Sourcewell may not be able to open the file. It is your sole responsibility to ensure that the uploaded document(s) are not either defective, corrupted or blank and that the documents can be opened and viewed by Sourcewell.

3. Sourcewell may reject any response where any document(s) cannot be opened and viewed by Sourcewell.

4. If you need to upload more than one (1) document for a single item, you should combine the documents into one zipped file. If the zipped file contains more than one (1) document, ensure each document is named, in relation to the submission format item responding to. For example, if responding to the Marketing Plan category save the document as "Marketing Plan."

- Financial Strength and Stability - Tyler Technologies - 2019 Annual Report.pdf - Thursday September 03, 2020 13:58:23
- Marketing Plan/Samples - Tyler Technologies Product Brochures.pdf - Thursday September 03, 2020 15:09:07
- WMBE/MBE/SBE or Related Certificates - Enterprise_Group_Form_Contract_-_3Q19.pdf - Thursday September 03, 2020 15:21:18
- Warranty Information - Enterprise_Group_Form_Contract_-_SAAS_-_4Q19.pdf - Thursday September 03, 2020 15:21:25
- Pricing - Tyler Technologies _Sourcewell Pricing_Discount Summary.pdf - Thursday September 03, 2020 15:10:41
- Additional Document - 2020 NWPS Pricebook Revision 1 081720.pdf - Thursday September 03, 2020 15:12:07

Proposer's Affidavit

PROPOSER AFFIDAVIT AND ASSURANCE OF COMPLIANCE

I certify that I am the authorized representative of the Proposer submitting the foregoing Proposal with the legal authority to bind the Proposer to this Affidavit and Assurance of Compliance:

1. The Proposer is submitting this Proposal under its full and complete legal name, and the Proposer legally exists in good standing in the jurisdiction of its residence.

2. The Proposer warrants that the information provided in this Proposal is true, correct, and reliable for purposes of evaluation for contract award.

3. The Proposer, including any person assisting with the creation of this Proposal, has arrived at this Proposal independently and the Proposal has been created without colluding with any other person, company, or parties that have or will submit a proposal under this solicitation; and the Proposal has in all respects been created fairly without any fraud or dishonesty. The Proposer has not directly or indirectly entered into any agreement or arrangement with any person or business in an effort to influence any part of this solicitation or operations of a resulting contract; and the Proposer has not taken any action in restraint of free trade or competitiveness in connection with this solicitation. Additionally, if Proposer has worked with a consultant on the Proposal, the consultant (an individual or a company) has not assisted any other entity that has submitted or will submit a proposal for this solicitation.

4. To the best of its knowledge and belief, and except as otherwise disclosed in the Proposal, there are no relevant facts or circumstances which could give rise to an organizational conflict of interest. An organizational conflict of interest exists when a vendor has an unfair competitive advantage or the vendor's objectivity in performing the contract is, or might be, impaired.

5. The contents of the Proposal have not been communicated by the Proposer or its employees or agents to any person not an employee or legally authorized agent of the Proposer and will not be communicated to any such persons prior to Due Date of this solicitation.

6. If awarded a contract, the Proposer will provide to Sourcewell Participating Entities the equipment, products, and services in accordance with the terms, conditions, and scope of a resulting contract.

7. The Proposer possesses, or will possess before delivering any equipment, products, or services, all applicable licenses or certifications necessary to deliver such equipment, products, or services under any resulting contract.

8. The Proposer agrees to deliver equipment, products, and services through valid contracts, purchase orders, or means that are acceptable to Sourcewell Members. Unless otherwise agreed to, the Proposer must provide only new and first-quality products and related services to Sourcewell Members under an awarded Contract.

9. The Proposer will comply with all applicable provisions of federal, state, and local laws, regulations, rules, and orders.

10. The Proposer understands that Sourcewell will reject RFP proposals that are marked "confidential" (or "nonpublic," etc.), either substantially or in their entirety. Under Minnesota Statutes Section 13.591, subdivision 4, all proposals are considered nonpublic data until the evaluation is complete and a Contract is awarded. At that point, proposals become public data. Minnesota Statutes Section 13.37 permits only certain narrowly defined data to be considered a "trade secret," and thus nonpublic data under Minnesota's Data Practices Act.

11. Proposer its employees, agents, and subcontractors are not:

    a. Included on the "Specially Designated Nationals and Blocked Persons" list maintained by the Office of Foreign Assets Control of the United States Department of the Treasury found at: https://www.treasury.gov/ofac/downloads/sdnlist.pdf;

    b. Included on the government-wide exclusions lists in the United States System for Award Management found at: https://www.sam.gov/portal/3; or

    c. Presently debarred, suspended, proposed for debarment, declared ineligible, or voluntarily excluded from programs operated

by the State of Minnesota; the United States federal government or the Canadian government, as applicable; or any Participating Entity. Vendor certifies and warrants that neither it nor its principals have been convicted of a criminal offense related to the subject matter of this solicitation.

☑ By checking this box I acknowledge that I am bound by the terms of the Proposer's Affidavit, have the legal authority to submit this Proposal on behalf of the Proposer, and that this electronic acknowledgment has the same legal effect, validity, and enforceability as if I had hand signed the Proposal. This signature will not be denied such legal effect, validity, or enforceability solely because an electronic signature or electronic record was used in its formation. - Andrea Fravert, Director of Legal Affairs, Tyler Technologies

The Proposer declares that there is an actual or potential Conflict of Interest relating to the preparation of its submission, and/or the Proposer foresees an actual or potential Conflict of Interest in performing the contractual obligations contemplated in the bid.

○ **Yes** ◉ **No**

The Bidder acknowledges and agrees that the addendum/addenda below form part of the Bid Document.

Check the box in the column "**I have reviewed this addendum**" below to acknowledge each of the addenda.

File Name	I have reviewed the below addendum and attachments (if applicable)	Pages
Addendum_7_Public_Sector_Admin_Software_RFP_090320 Thu August 20 2020 03:52 PM	☑	4
Addendum_6_Public_Sector_Admin_Software_RFP_090320 Mon August 17 2020 07:56 AM	☑	2
Addendum_5_Public_Sector_Admin_Software_RFP_090320 Mon August 10 2020 02:35 PM	☑	1
Addendum_4_Public_Sector_Admin_Software_RFP_090320 Thu August 6 2020 10:34 AM	☑	2
Addendum_3_Public_Sector_Admin_Software_RFP_090320 Thu July 30 2020 03:38 PM	☑	3
Addendum_2_Public_Sector_Admin_Software_RFP_090320 Thu July 23 2020 12:34 PM	☑	1
Addendum_1_Public_Sector_Admin_Software_RFP_090320 Fri July 17 2020 09:18 AM	☑	1

City of Opa-Locka, FL

SOW from Tyler Technologies, Inc.

4/28/2022

Presented to:
City of Opa-Locka, FL
3400 NW 135th St.
Opa-Locka, FL 33054-4708

Contact:
Becky Terry, PMP
Email: Becky.Terry@TylerTech.com
One Tyler Drive
Yarmouth, ME 04096

Table of Contents

PART 1: EXECUTIVE SUMMARY 1

1. Project Overview 1
1.1 Introduction 1
1.2 Project Goals 1
1.3 Methodology 1

PART 2: PROJECT FOUNDATION 3

2. Project Governance 3

3. Project Scope Control 4
3.1 Managing Scope and Project Change 4
3.2 Change Control 4
3.3 Change Request Management 4

4. Acceptance Process 6

5. Roles and Responsibilities 6
5.1 Tyler Roles & Responsibilities 6
5.1.1 Tyler Executive Manager 7
5.1.2 Tyler Implementation Manager 7
5.1.3 Tyler Project Manager 7
5.1.4 Tyler Implementation Consultant 8
5.1.5 Tyler Sales 8
5.1.6 Tyler Technical Services 8
5.2 City Roles & Responsibilities 9
5.2.1 City Executive Sponsor 9
5.2.2 City Steering Committee 9
5.2.3 City Project Manager 9
5.2.4 City Functional Leads 11
5.2.5 City Power Users 11
5.2.6 City End Users 12
5.2.7 City Technical Lead 12
5.2.8 City Change Management Lead 13

PART 3: PROJECT PLAN 14

6. Project Stages 14
6.1 Initiate and Plan 15
6.1.1 Initial Coordination 15
6.1.2 Project/Phase Planning 16
6.1.3 Infrastructure Planning 17

6.1.4 Stakeholder Meeting 18
6.1.5 GIS Preparation 19
6.1.6 Control Point 1: Initiate & Plan Stage Acceptance 20
6.2 Assess & Define 20
6.2.1 Solution Orientation 20
6.2.2 Current & Future State Analysis 21
6.2.3 Conversion Assessment 22
6.2.4 Intentionally left blank. 23
6.2.5 Intentionally left blank. 23
6.2.6 Control Point 2: Assess & Define Stage Acceptance 23
6.3 Prepare Solution 24
6.3.1 Initial System Deployment 24
6.3.2 Configuration 25
6.3.3 Process Refinement 26
6.3.4 Conversion Delivery 27
6.3.5 Intentionally left blank. 29
6.3.6 Intentionally left blank. 29
6.3.7 Control Point 3: Prepare Solution Stage Acceptance 29
6.4 Production Readiness 30
6.4.1 Solution Validation 30
6.4.2 Go-Live Readiness 31
6.4.3 End User Training 32
6.4.4 Control Point 4: Production Readiness Stage Acceptance 33
6.5 Production 33
6.5.1 Go-Live 33
6.5.2 Transition to Client Services 35
6.5.3 Post Go-Live Activities 35
6.5.4 Control Point 5: Production Stage Acceptance 36
6.6 Close 37
6.6.1 Phase Closeout 37
6.6.2 Project Closeout 38
6.6.3 Control Point 6: Close Stage Acceptance 39

7. General Assumptions 39
7.1 Project 39
7.2 Organizational Change Management 40
7.3 Resources and Scheduling 40
7.4 Data 40
7.5 Facilities 41

8. Glossary 42

PART 4: APPENDICES 45

9. Conversion 45
9.1 Enterprise Permitting & Licensing Conversion Summary 45

9.1.1 Community Development 45
9.1.2 Business Management 45
9.2 Enterprise ERP Conversion Summary 46
9.2.1 Accounting COA 46
9.2.2 Accounting - Actuals 46
9.2.3 Accounting - Budgets 46
9.2.4 Accounts Payable Master 46
9.2.5 Accounts Payable - Checks 47
9.2.6 Accounts Payable - Invoices 47
9.2.7 Capital Assets Master 47
9.2.8 General Billing CID 47
9.2.9 General Billing – Recurring Invoices 47
9.2.10 General Billing – Bills 47
9.2.11 Project Grant Accounting 47
9.2.12 Project Grant Accounting - Actuals 47
9.2.13 Project Grant Accounting – Budget 47
9.2.14 Purchase Orders 48
9.2.15 Payroll 48
9.2.16 Payroll - Deductions 48
9.2.17 Payroll – Accrual Balances 48
9.2.18 Payroll – Accumulators 48
9.2.19 Payroll – Check History 48
9.2.20 Payroll – State Retirement Tables 48

10. Additional Appendices 49
10.1 Enterprise Permitting & Licensing Definitions 49
10.1.1 "Template Business Transactions" 49
10.1.2 "Unique Business Transactions" 49
10.1.3 "Geo-Rules" 49
10.1.4 "Automation Events" 50
10.1.5 "Enterprise Permitting & Licensing SDK/API (Toolkits)" 50
10.2 Koa Hills Services 50

11. Project Timeline 54
11.1 ERP Project Timeline 54
11.2 Data & Insights Project Plan 56
11.3 My Civic Timeline 56
11.4 Intentionally left blank. 57

Part 1: Executive Summary

1. Project Overview

1.1 Introduction

Tyler Technologies ("Tyler") is the largest and most established provider of integrated software and technology services focused solely on the public sector. Tyler's end-to-end solutions empower public sector entities including local, state, provincial and federal government, to operate more efficiently and connect more transparently with their constituents and with each other. By connecting data and processes across disparate systems, Tyler's solutions transform how clients gain actionable insights that solve problems in their communities.

1.2 Project Goals

This Statement of Work ("SOW") documents the methodology, implementation stages, activities, and roles and responsibilities, and project scope listed in the Investment Summary of the Agreement between Tyler and the City (collectively the "Project").

The overall goals of the project are to:

- Successfully implement the contracted scope on time and on budget
- Increase operational efficiencies and empower users to be more productive
- Improve accessibility and responsiveness to external and internal customer needs
- Overcome current challenges and meet future goals
- Eliminate redundant data entry
- Provide a user-friendly user interface to promote system use and productivity
- Streamline business processes through automation, integration, and workflows
- Provide a single, comprehensive, and integrated solution to manage business functions

1.3 Methodology

This is accomplished by the City and Tyler working as a partnership and Tyler utilizing its depth of implementation experience. While each Project is unique, all will follow Tyler's six-stage methodology. Each of the six stages is comprised of multiple work packages, and each work package includes a narrative description, objectives, tasks, inputs, outputs/deliverables, assumptions, and a responsibility matrix.

Tailored specifically for Tyler's public sector clients, the project methodology contains Stage Acceptance Control Points throughout each Phase to ensure adherence to scope, budget, timeline controls, effective communications, and quality standards. Clearly defined, the project methodology repeats consistently across Phases, and is scaled to meet the City's complexity and organizational needs.

Tyler's Six Stage Project Methodology

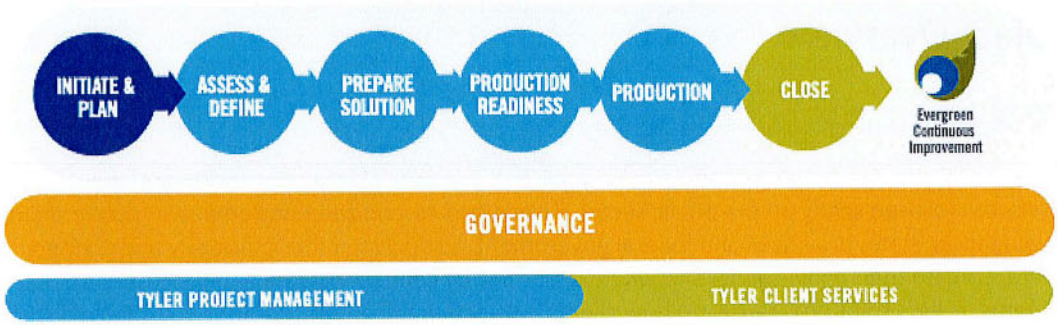

The methodology adapts to both single-phase and multiple-phase projects.

To achieve Project success, it is imperative that both the City and Tyler commit to including the necessary leadership and governance. During each stage of the Project, it is expected that the City and Tyler Project teams work collaboratively to complete tasks. An underlying principle of Tyler's Implementation process is to employ an iterative model where the City's business processes are assessed, configured, validated, and refined cyclically in line with the project budget. This approach is used in multiple stages and work packages as illustrated in the graphic below.

Iterative Project Model

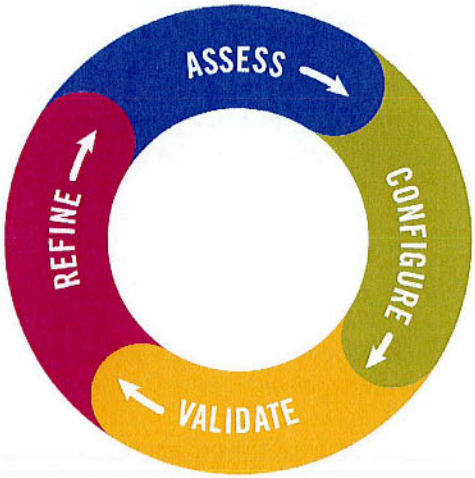

The delivery approach is systematic, which reduces variability and mitigates risks to ensure Project success. As illustrated, some stages, along with work packages and tasks, are intended to be overlapping by nature to complete the Project efficiently and effectively.

Part 2: Project Foundation

2. Project Governance

Project governance is the management framework within which Project decisions are made. The role of Project governance is to provide a decision-making approach that is logical, robust, and repeatable. This allows organizations to have a structured approach for conducting its daily business in addition to project related activities.

This section outlines the resources required to meet the business needs, objectives, and priorities for the Project, communicate the goals to other Project participants, and provide support and guidance to accomplish these goals. Project governance defines the structure for escalation of issues and risks, Change Control review and authority, and Organizational Change Management activities. Throughout the Statement of Work Tyler has provided RACI Matrices for activities to be completed throughout the implementation which will further outline responsibilities of different roles in each stage. Further refinement of the governance structure, related processes, and specific roles and responsibilities occurs during the Initiate & Plan Stage.

The chart below illustrates an overall team perspective where Tyler and the City collaborate to resolve Project challenges according to defined escalation paths. If project managers do not possess authority to determine a solution, resolve an issue, or mitigate a risk, Tyler implementation management and the City Steering Committee become the escalation points to triage responses prior to escalation to the City and Tyler executive sponsors. As part of the escalation process, each Project governance tier presents recommendations and supporting information to facilitate knowledge transfer and issue resolution. The City and Tyler executive sponsors serve as the final escalation point.

Project Governance Relationships

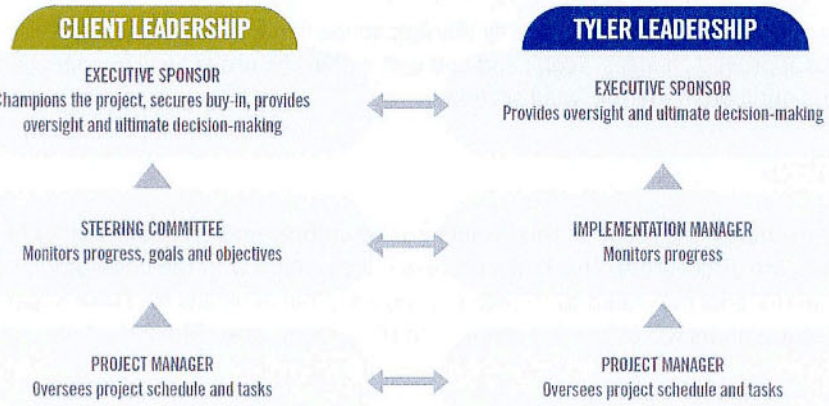

3. Project Scope Control

3.1 Managing Scope and Project Change

Project Management governance principles contend that there are three connected constraints on a Project: budget, timeline, and scope. These constraints, known as the "triple constraints" or project management triangle, define budget in terms of financial cost, labor costs, and other resource costs. Scope is defined as the work performed to deliver a product, service or result with the specified features and functions, while time is simply defined as the schedule. The Triple Constraint theory states that if you change one side of the triangle, the other two sides must be correspondingly adjusted. For example, if the scope of the Project is increased, cost and time to complete will also need to increase. The Project and executive teams will need to remain cognizant of these constraints when making impactful decisions to the Project. A simple illustration of this triangle is included here, showing the connection of each item and their relational impact to the overall Scope.

A pillar of any successful project is the ability to properly manage scope while allowing the appropriate level of flexibility to incorporate approved changes. Scope and changes within the project will be managed using the change control process outlined in the following section.

3.2 Change Control

It may become necessary to change the scope of this Project due to unforeseeable circumstances (e.g., new constraints or opportunities are discovered). This Project is being undertaken with the understanding that Project scope, schedule, and/or cost may need to change to produce optimal results for stakeholders. Changes to contractual requirements will follow the change control process specified in the final contract, and as described below.

3.3 Change Request Management

Should the need for a change to Project scope, schedule, and/or cost be identified during the Project, the change will be brought to the attention of the Steering Committee and an assessment of the change will occur. While such changes may result in additional costs and delays relative to the schedule, some changes may result in less cost to the City; for example, the City may decide it no longer needs a deliverable originally defined in the Project. The Change Request will include the following information:

- The nature of the change.
- A good faith estimate of the additional cost or associated savings to the City, if any.
- The timetable for implementing the change.
- The effect on and/or risk to the schedule, resource needs or resource responsibilities.

The City will use its good faith efforts to either approve or disapprove any Change Request within ten (10) Business Days (or other period as mutually agreeable between Tyler and the City). Any changes to the Project scope, budget, or timeline must be documented and approved in writing using a Change Request form. These changes constitute a formal amendment to the Statement of Work and will supersede any conflicting term in the Statement of Work.

Change Request Process

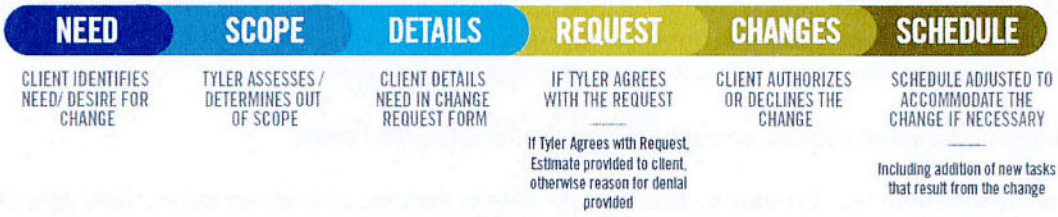

4. Acceptance Process

The implementation of a Project involves many decisions to be made throughout its lifecycle. Decisions will vary from higher level strategy decisions to smaller, detailed Project level decisions. It is critical to the success of the Project that each City office or department designates specific individuals for making decisions on behalf of their offices or departments.

Both Tyler and the City will identify representative project managers. These individuals will represent the interests of all stakeholders and serve as the primary contacts between the two organizations.

The coordination of gaining City feedback and approval on Project deliverables will be critical to the success of the Project. The City project manager will strive to gain deliverable and decision approvals from all authorized City representatives. Given that the designated decision-maker for each department may not always be available, there must be a designated proxy for each decision point in the Project. Assignment of each proxy will be the responsibility of the leadership from each City department. The proxies will be named individuals that have the authorization to make decisions on behalf of their department.

The following process will be used for accepting Deliverables and Control Points:

- The City shall have five (5) business days from the date of delivery, or as otherwise mutually agreed upon by the parties in writing, to accept each Deliverable or Control Point. If the City does not provide acceptance or acknowledgement within five (5) business days, or the otherwise agreed upon timeframe, not to be unreasonably withheld, Tyler deems the Deliverable or Control Point as accepted.
- If the City does not agree the Deliverable or Control Point meets requirements, the City shall notify Tyler project manager(s), in writing, with reasoning within five (5) business days, or the otherwise agreed-upon timeframe, not to be unreasonably withheld, of receipt of the Deliverable.
- Tyler shall address any deficiencies and redeliver the Deliverable or Control Point. The City shall then have two (2) business days from receipt of the redelivered Deliverable or Control Point to accept or again submit written notification of reasons for rejecting the milestone. If the City does not provide acceptance within two (2) business days, or the otherwise agreed upon timeframe, not to be unreasonably withheld, Tyler deems the Deliverable or Control Point as accepted.

5. Roles and Responsibilities

The following defines the roles and responsibilities of each Project resource for the City and Tyler. Roles and responsibilities may not follow the organizational chart or position descriptions at the City, but are roles defined within the Project. It is common for individual resources on both the Tyler and City project teams to fill multiple roles. Similarly, it is common for some roles to be filled by multiple people.

5.1 Tyler Roles & Responsibilities

Tyler assigns a project manager prior to the start of each Phase of the Project (some Projects may only be one Phase in duration). Additional Tyler resources are assigned as the schedule develops and as needs arise.

5.1.1 Tyler Executive Manager

Tyler executive management has indirect involvement with the Project and is part of the Tyler escalation process. This team member offers additional support to the Project team and collaborates with other Tyler department managers as needed to escalate and facilitate implementation Project tasks and decisions.

- Provides clear direction for Tyler staff on executing on the Project Deliverables to align with satisfying the City 's overall organizational strategy.
- Authorizes required Project resources.
- Resolves all decisions and/or issues not resolved at the implementation management level as part of the escalation process.
- Acts as the counterpart to the City 's executive sponsor.

5.1.2 Tyler Implementation Manager

- Tyler implementation management has indirect involvement with the Project and is part of the Tyler escalation process. The Tyler project managers consult implementation management on issues and outstanding decisions critical to the Project. Implementation management works toward a solution with the Tyler Project Manager or with City management as appropriate. Tyler executive management is the escalation point for any issues not resolved at this level.
- Assigns Tyler Project personnel.
- Provides support for the Project team.
- Provides management support for the Project to ensure it is staffed appropriately and staff have necessary resources.
- Monitors Project progress including progress towards agreed upon goals and objectives.

5.1.3 Tyler Project Manager

- The Tyler project manager(s) provides oversight of the Project, coordination of Tyler resources between departments, management of the Project budget and schedule, effective risk, and issue management, and is the primary point of contact for all Project related items. As requested by the City, the Tyler Project Manager provides regular updates to the City Steering Committee and other Tyler governance members. Tyler Project Manager's role includes responsibilities in the following areas:

5.1.3.1 Contract Management

- Validates contract compliance throughout the Project.
- Ensures Deliverables meet contract requirements.
- Acts as primary point of contact for all contract and invoicing questions.
- Prepares and presents contract milestone signoffs for acceptance by the City project manager(s).
- Coordinates Change Requests, if needed, to ensure proper Scope and budgetary compliance.

5.1.3.2 Planning

- Delivers project planning documents.
- Defines Project tasks and resource requirements.
- Develops initial Project schedule and Project Management Plan.
- Collaborates with the City project manager(s) to plan and schedule Project timelines to achieve on-time implementation.

5.1.3.3 Implementation Management

- Tightly manages Scope and budget of Project to ensure Scope changes and budget planned versus actual are transparent and handled effectively and efficiently.
- Establishes and manages a schedule and Tyler resources that properly support the Project Schedule and are also in balance with Scope/budget.
- Establishes risk/issue tracking/reporting process between the City and Tyler and takes all necessary steps to proactively mitigate these items or communicate with transparency to the City any items that may impact the outcomes of the Project.
- Collaborates with the City 's project manager(s) to establish key business drivers and success indicators that will help to govern Project activities and key decisions to ensure a quality outcome of the project.
- Collaborates with the City 's project manager(s) to set a routine communication plan that will aide all Project team members, of both the City and Tyler, in understanding the goals, objectives, status, and health of the Project.

5.1.3.4 Resource Management

- Acts as liaison between Project team and Tyler manager(s).
- Identifies and coordinates all Tyler resources across all applications, Phases, and activities including development, forms, installation, reports, implementation, and billing.
- Provides direction and support to Project team.
- Manages the appropriate assignment and timely completion of tasks as defined in the Project Schedule, task list, and Go-Live Checklist.
- Assesses team performance and adjusts as necessary.
- Consulted on in Scope 3rd party providers to align activities with ongoing Project tasks.

5.1.4 Tyler Implementation Consultant

- Completes tasks as assigned by the Tyler project manager(s).
- Documents activities for services performed by Tyler.
- Guides the City through software validation process following configuration.
- Assists during Go-Live process and provides support until the City transitions to Client Services.
- Facilitates training sessions and discussions with the City and Tyler staff to ensure adequate discussion of the appropriate agenda topics during the allotted time.
- May provide conversion review and error resolution assistance.

5.1.5 Tyler Sales

- Supports Sales to Implementation knowledge transfer during Initiate & Plan.
- Provides historical information, as needed, throughout implementation.
- Participates in pricing activities if additional licensing and/or services are needed.

5.1.6 Tyler Technical Services

- Maintains Tyler infrastructure requirements and design document(s).
- Involved in system infrastructure planning/review(s).
- Provides first installation of licensed software with initial database on servers.
- Supports and assists the project team with technical/environmental issues/needs.
- Deploys Tyler products.

- Conducts GIS Planning.
- Reviews GIS data and provides feedback to the City.
- Loads City provided GIS data into the system.

5.2 City Roles & Responsibilities

City resources will be assigned prior to the start of each Phase of the Project. One person may be assigned to multiple Project roles.

5.2.1 City Executive Sponsor

The City executive sponsor provides support to the Project by providing strategic direction and communicating key issues about the Project and its overall importance to the organization. When called upon, the executive sponsor also acts as the final authority on all escalated Project issues. The executive sponsor engages in the Project, as needed, to provide necessary support, oversight, guidance, and escalation, but does not participate in day-to-day Project activities. The executive sponsor empowers the City steering committee, project manager(s), and functional leads to make critical business decisions for the City.

- Champions the project at the executive level to secure buy-in.
- Authorizes required project resources.
- Actively participates in organizational change communications.

5.2.2 City Steering Committee

The City steering committee understands and supports the cultural change necessary for the Project and fosters an appreciation for the Project's value throughout the organization. The steering committee oversees the City project manager and Project through participation in regular internal meetings. The City steering committee remains updated on all Project progress, Project decisions, and achievement of Project milestones. The City steering committee also serves as primary level of issue resolution for the Project.

- Works to resolve all decisions and/or issues not resolved at the project manager level as part of the escalation process.
- Attends all scheduled steering committee meetings.
- Provides support for the project team.
- Assists with communicating key project messages throughout the organization.
- Prioritizes the project within the organization.
- Ensures the project staffed appropriately and that staff have necessary resources.
- Monitors project progress including progress towards agreed upon goals and objectives.
- Has the authority to approve or deny changes impacting the following areas:
    - Cost
    - Scope
    - Schedule
    - Project Goals
    - City Policies
    - Needs of other client projects

5.2.3 City Project Manager

The City shall assign project manager(s) prior to the start of this project with overall responsibility and authority to make decisions related to Project Scope, scheduling, and task assignment. The City Project

Manager should communicate decisions and commitments to the Tyler project manager(s) in a timely and efficient manner. When the City project manager(s) do not have the knowledge or authority to make decisions, he or she engages the necessary resources to participate in discussions and make decisions in a timely fashion to avoid Project delays. The City project manager(s) are responsible for reporting to the City steering committee and determining appropriate escalation points.

5.2.3.1 Contract Management

- Validates contract compliance throughout the project.
- Ensures that invoicing and Deliverables meet contract requirements.
- Acts as primary point of contact for all contract and invoicing questions. Collaborates on and approves Change Requests, if needed, to ensure proper scope and budgetary compliance.

5.2.3.2 Planning

- Reviews and accepts project planning documents.
- Defines project tasks and resource requirements for the City project team.
- Collaborates in the development and approval of the project schedule.
- Collaborates with Tyler project manager(s) to plan and schedule project timelines to achieve on-time implementation.

5.2.3.3 Implementation Management

- Tightly manages project budget and scope.
- Collaborates with Tyler project manager(s) to establish a process and approval matrix to ensure that scope changes and budget (planned versus actual) are transparent and handled effectively and efficiently.
- Collaborates with Tyler project manager to establish and manage a schedule and resource plan that properly supports the project schedule as a whole and is also in balance with scope and budget.
- Collaborates with Tyler project manager(s) to establish risk and issue tracking and reporting process between the City and Tyler and takes all necessary steps to proactively mitigate these items or communicate with transparency to Tyler any items that may impact the outcomes of the project.
- Collaborates with Tyler project manager(s) to establish key business drivers and success indicators that will help to govern project activities and key decisions to ensure a quality outcome of the project.
- Routinely communicates with both the City staff and Tyler, aiding in the understanding of goals, objectives, current status, and health of the project by all team members.
- Manages the requirements gathering process and ensure timely and quality business requirements are being provided to Tyler.

5.2.3.4 Resource Management

- Acts as liaison between project team and stakeholders.
- Identifies and coordinates all City resources across all modules, phases, and activities including data conversions, forms design, hardware and software installation, reports building, and satisfying invoices.
- Provides direction and support to project team.
- Builds partnerships among the various stakeholders, negotiating authority to move the project forward.
- Manages the appropriate assignment and timely completion of tasks as defined.
- Assesses team performance and takes corrective action, if needed.

- Provides guidance to City technical teams to ensure appropriate response and collaboration with Tyler Technical Support Teams to ensure timely response and appropriate resolution.
- Owns the relationship with in-Scope 3rd party providers and aligns activities with ongoing project tasks.
- Ensures that users have appropriate access to Tyler project toolsets as required.
- Conducts training on proper use of toolsets.
- Validates completion of required assignments using toolsets.

5.2.4 City Functional Leads

- Makes business process change decisions under time sensitive conditions.
- Communicates existing business processes and procedures to Tyler consultants.
- Assists in identifying business process changes that may require escalation.
- Contributes business process expertise for Current & Future State Analysis.
- Identifies and includes additional subject matter experts to participate in Current & Future State Analysis.
- Validates that necessary skills have been retained by end users.
- Provides End Users with dedicated time to complete required homework tasks.
- Acts as an ambassador/champion of change for the new process and provide business process change support.
- Identifies and communicates any additional training needs or scheduling conflicts to the City project manager.
- Actively participates in all aspects of the implementation, including, but not limited to, the following key activities:
    - Task completion
    - Stakeholder Meeting
    - Project Management Plan development
    - Schedule development
    - Maintenance and monitoring of risk register
    - Escalation of issues
    - Communication with Tyler project team
    - Coordination of City resources
    - Attendance at scheduled sessions
    - Change management activities
    - Modification specification, demonstrations, testing and approval assistance
    - Data analysis assistance
    - Decentralized end user training
    - Process testing
    - Solution Validation

5.2.5 City Power Users

- Participate in project activities as required by the project team and project manager(s).
- Provide subject matter expertise on the City business processes and requirements.
- Act as subject matter experts and attend Current & Future State Analysis sessions as needed.
- Attend all scheduled training sessions.
- Participate in all required post-training processes as needed throughout project.
- Test all application configuration to ensure it satisfies business process requirements.
- Become application experts.
- Participate in Solution Validation.

- Adopt and support changed procedures.
- Complete all deliverables by the due dates defined in the project schedule.
- Demonstrate competency with Tyler products processing prior to Go-live.
- Provide knowledge transfer to the City staff during and after implementation.
- Participate in conversion review and validation.

5.2.6 City End Users

- Attend all scheduled training sessions.
- Become proficient in application functions related to job duties.
- Adopt and utilize changed procedures.
- Complete all deliverables by the due dates defined in the project schedule.
- Utilize software to perform job functions at and beyond Go-live.

5.2.7 City Technical Lead

- Coordinates updates and releases with Tyler as needed.
- Coordinates the copying of source databases to training/testing databases as needed for training days.
- Coordinates and adds new users, printers and other peripherals as needed.
- Validates that all users understand log-on process and have necessary permission for all training sessions.
- Coordinates interface development for City third party interfaces.
- Develops or assists in creating reports as needed.
- Ensures on-site system meets specifications provided by Tyler.
- Assists with software installation as needed.
- Extracts and transmits conversion data and control reports from the City's legacy system per the conversion schedule set forth in the project schedule.

5.2.7.1 City GIS

- Participates in GIS planning activities.
- Responsible for management and maintenance of City GIS infrastructure and data.
- Ensures GIS data/service endpoints are in alignment with Tyler software requirements.
- Provides Tyler implementation team with GIS data/service access information.

5.2.7.2 City Upgrade Coordination

- Becomes familiar with the software upgrade process and required steps.
- Becomes familiar with Tyler's releases and updates.
- Utilizes Tyler resources to stay abreast of the latest Tyler releases and updates, as well as the latest helpful tools to manage the City's software upgrade process.
- Assists with the software upgrade process during implementation.
- Manages software upgrade activities post-implementation.
- Manages software upgrade plan activities.
- Coordinates software upgrade plan activities with City and Tyler resources.
- Communicates changes affecting users and department stakeholders.
- Obtains department stakeholder acceptance to upgrade production environment.

5.2.8 City Change Management Lead

- Validates that users receive timely and thorough communication regarding process changes.
- Provides coaching to supervisors to prepare them to support users through the project changes.
- Identifies the impact areas resulting from project activities and develops a plan to address them proactively.
- Identifies areas of resistance and develops a plan to reinforce the change.
- Monitors post-production performance and new process adherence.

Part 3: Project Plan

6. Project Stages

Work Breakdown Structure

The Work Breakdown Structure (WBS) is a hierarchical representation of a Project or Phase broken down into smaller, more manageable components. The top-level components are called "Stages" and the second level components are called "Work Packages". The work packages, shown below each stage, contain the high-level work to be done. The detailed Project Schedule, developed during Project/Phase Planning and finalized during subsequent stages, lists the tasks to be completed within each work package. Each stage ends with a "Control Point", confirming the work performed during that stage of the Project has been accepted by the City.

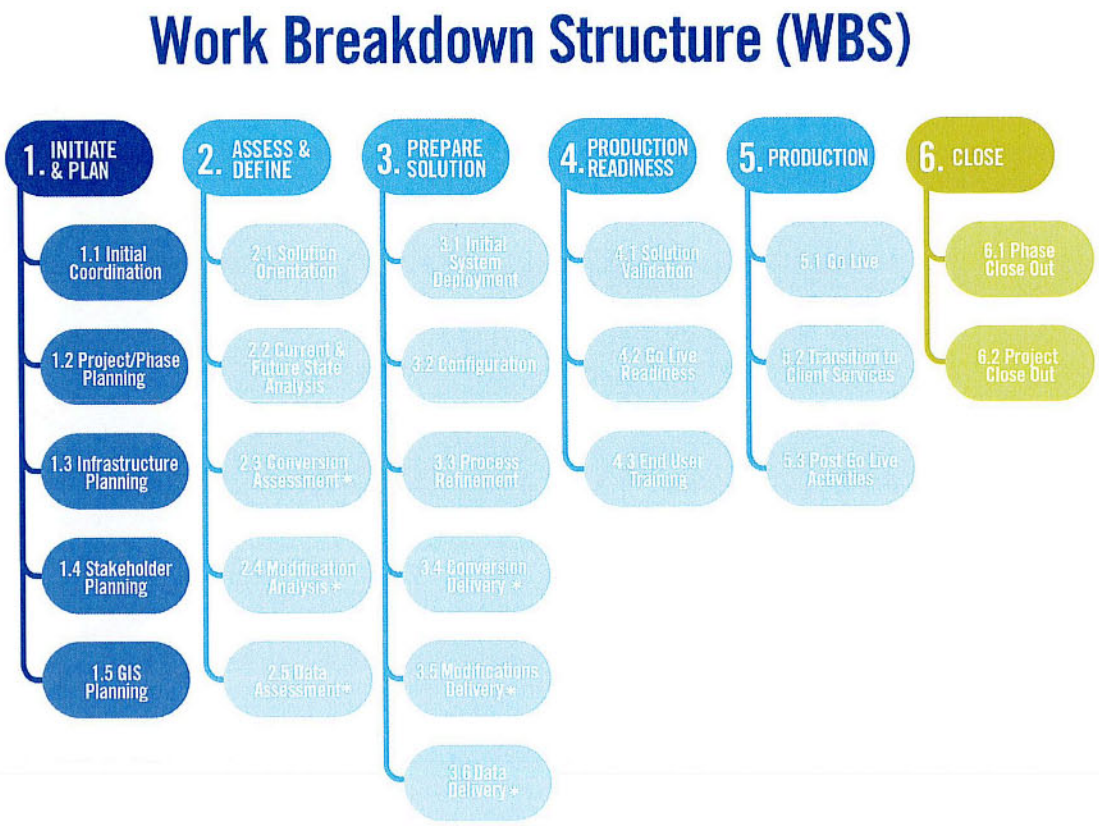

**Items noted with an asterisk in the graphic above relate to specific products and services. If those products and services are not included in the scope of the contract, these specific work packages will be noted as "Intentionally Left Blank" in Section 6 of the Statement of Work.*

6.1 Initiate and Plan

The Initiate and Plan stage involves Project initiation, infrastructure, and planning. This stage creates a foundation for the Project by identifying and establishing sequence and timing for each Phase as well as verifying scope for the Project. This stage will be conducted at the onset of the Project, with a few unique items being repeated for the additional Phases as needed.

6.1.1 Initial Coordination

Prior to Project commencement, Tyler management assigns project manager(s). Additional Project resources will be assigned later in the Project as a Project schedule is developed. Tyler provides the City with initial Project documents used to gather names of key personnel, their functional role as it pertains to the Project, as well as any blackout dates to consider for future planning. the City gathers the information requested by the provided deadline ensuring preliminary planning and scheduling can be conducted moving the Project forward in a timely fashion. Internally, the Tyler Project Manager(s) coordinate with sales to ensure transfer of vital information from the sales process prior to scheduling a Project Planning Meeting with the City's team. During this step, Tyler will work with the City to establish the date(s) for the Project and Phase Planning session.

Objectives:

- Formally launch the project.
- Establish project governance.
- Define and communicate governance for Tyler.
- Identify City project team.

STAGE 1	Initial Coordination																
	Tyler								City								
RACI MATRIX KEY: R = Responsible A = Accountable C = Consulted I = Informed	Executive Manager	Implementation Manager	Project Manager	Implementation Consultant	Data Experts	Modification Services	Technical Services	Client Services	Executive Sponsor	Steering Committee	Project Manager	Functional Leads	Change Management Leads	Subject Matter Experts (Power	Department Heads	End Users	Technical Leads
Tyler project team is assigned	A	R	C	I	I	I	I		I		I						
City project team is assigned									A	I	R	I	I	I			
Provide initial project documents to the City		A	R	C			C		I		I						
Gather preliminary information requested			I						A		R	C		C		C	C
Sales to implementation knowledge transfer		A	R	I	I	I	I				I						
Create Project Portal to store project artifacts and facilitate communication		A	R								I						

Inputs	Contract documents
	Statement of Work

Outputs/Deliverables	Completed initial project documents
	Project portal

Work package assumptions:

- Project activities begin after the agreement has been fully executed.

6.1.2 Project/Phase Planning

Project and Phase planning provides an opportunity to review the contract, software, data conversions and services purchased, identify applications to implement in each Phase (if applicable), and discuss implementation timeframes.

During this work package Tyler will work with the City to coordinate and plan a formal Project planning meeting(s). This meeting signifies the start of the Project and should be attended by all City Project team members and the Tyler Project Manager. The meeting provides an opportunity for Tyler to introduce its implementation methodology, terminology, and Project management best practices to the City's Project Team. This will also present an opportunity for project managers and Project sponsors to begin to discuss Project communication, metrics, status reporting and tools to be used to measure Project progress and manage change.

Tyler will work with the City Project Team to prepare and deliver the Project Management Plan as an output of the planning meeting. This plan will continue to evolve and grow as the Project progresses and will describe how the project will be executed, monitored, and controlled.

During project planning, Tyler will introduce the tools that will be used throughout the implementation. Tyler will familiarize the City with these tools during project planning and make them available for review and maintenance as applicable throughout the project. Some examples are Solution validation plan, issue log, and go-live checklist.

STAGE 1	Project/Phase Planning																	
	Tyler								City									
RACI MATRIX KEY: R = Responsible A = Accountable C = Consulted I = Informed	Executive Manager	Implementation Manager	Project Manager	Implementation Consultant	Data Experts	Modification Services	Technical Services	Client Services	Executive Sponsor	Steering Committee	Project Manager	Functional Leads	Change Management Leads	Subject Matter Experts (Power	Department Heads	End Users	Technical Leads	
Schedule and conduct planning session(s)		A	R						I		C	C	I					

Develop Project Management Plan		A	R						I		C	C	I					
Develop initial project schedule		A	R	I	I	I	I		I	I	C	C	I	I	C		I	

Inputs	Contract documents
	Statement of Work
	Guide to Starting Your Project

Outputs / Deliverables		Acceptance Criteria [only] for Deliverables
	Project Management Plan	Delivery of document
	Project Operational Plan	Delivery of document
	Initial Project Schedule	City provides acceptance of schedule based on resource availability, project budget, and goals.

Work package assumptions:

- City has reviewed and completed the Guide to Starting Your Project document.

6.1.3 Infrastructure Planning

Procuring required hardware and setting it up properly is a critical part of a successful implementation. This task is especially important for Tyler-hosted/SaaS deployment models. Tyler will be responsible for building the environments for a hosted/SaaS deployment, unless otherwise identified in the Agreement. Tyler will install Licensed Software on application server(s) or train the City to install License Software. The City is responsible for the installation and setup of all peripheral devices.

Objectives:

- Ensure the City's infrastructure meets Tyler's application requirements.
- Ensure the City's infrastructure is scheduled to be in place and available for use on time.

STAGE 1	Infrastructure Planning																	
	Tyler								City									
RACI MATRIX KEY: R = Responsible A = Accountable C = Consulted I = Informed	Executive Manager	Implementation Manager	Project Manager	Implementation Consultant	Data Experts	Modification Services	Technical Services	Client Services	Executive Sponsor	Steering Committee	Project Manager	Functional Leads	Change Management Leads	Subject Matter Experts	Department Heads	End Users	Technical Leads	
Provide Infrastructure Requirements and Design Document		A	R		C		C				I						I	
Initial Infrastructure Meeting		A	R		C		C				C						C	

*Schedule SaaS Environment Availability		A	R				C				I					
*Schedule Hardware to be Available for Installation			I				I		A		R					C
Schedule Installation of All Licensed Software		A	R				C				I					I
Infrastructure Audit		A	R				C				I					C

Inputs	1. Initial Infrastructure Requirements and Design Document

Outputs / Deliverables		Acceptance Criteria [only] for Deliverables
	1. Completed Infrastructure Requirements and Design Document	Delivery of Document
	2. Infrastructure Audit	System Passes Audit Criteria

6.1.4 Stakeholder Meeting

Communication of the Project planning outcomes to the City Project team, executives and other key stakeholders is vital to Project success. The Stakeholder meeting is a strategic activity to inform, engage, gain commitment, and instill confidence in the City team. During the meeting, the goals and objectives of the Project will be reviewed along with detail on Project scope, implementation methodology, roles and responsibilities, Project timeline and schedule, and keys to Project success.

Objectives:

- Formally present and communicate the project activities and timeline.
- Communicate project expectations.

STAGE 1	Stakeholder Meeting																
	Tyler								City								
RACI MATRIX KEY: R = Responsible A = Accountable C = Consulted I = Informed	Executive Manager	Implementation Manager	Project Manager	Implementation Consultant	Data Experts	Modification Services	Technical Services	Client Services	Executive Sponsor	Steering Committee	Project Manager	Functional Leads	Change Management Leads	Subject Matter Experts (Power	Department Heads	End Users	Technical Leads
Create Stakeholder Meeting Presentation	I	A	R	I	I				I	I	C		I				
Review Stakeholder Meeting Presentation		I	C						A		R		C				
Perform Stakeholder Meeting Presentation	I	A	R	I	I				I	I	C	I	I	I	I	I	I

Inputs	Agreement
	SOW
	Project Management Plan

Outputs / Deliverables		Acceptance Criteria [only] for Deliverables
	Stakeholder Meeting Presentation	

Work package assumptions:

- None

6.1.5 GIS Preparation

GIS data is a core part of many Tyler applications. Other City offices/products may also use this data and have different GIS requirements. A key focus of this preparation will be the process for developing the GIS data for use with Tyler applications. This can be an iterative process, so it is important to begin preparation early.

Objectives:

- Identify all City GIS data sources and formats.
- Tyler to understand the City's GIS needs and practices.
- Ensure the City's GIS data meets Tyler product requirements.

STAGE 1	GIS Preparation																
	Tyler								City								
RACI MATRIX KEY: R = Responsible A = Accountable C = Consulted I = Informed	Executive Manager	Implementation Manager	Project Manager	Implementation Consultant	Data Experts	Modification Services	Technical Services	Client Services	Executive Sponsor	Steering Committee	Project Manager	Functional Leads	Change Management Leads	Subject Matter Experts (Power	Department Heads	End Users	Technical Leads
Initial GIS Planning Meeting		A	R				C				C						C
Determine all GIS Data Sources			I				I		A		R						C
Provide Source GIS Data			I				I		A		R						C
Review GIS Data and Provide Feedback		A	R				C				I						C

Inputs	GIS Requirements Document

Outputs / Deliverables		Acceptance Criteria [only] for Deliverables
	Production Ready Map Data	Meets Tyler GIS Requirements.

Work package assumptions:

- GIS data provided to Tyler is accurate and complete.
- GIS data provided to Tyler is current.
- City is responsible for maintaining the GIS data.

6.1.6 Control Point 1: Initiate & Plan Stage Acceptance

Acceptance criteria for this stage includes completion of all criteria listed below.

Note: Advancement to the Assess & Define stage is not dependent upon Tyler's receipt of this stage acceptance.

Initiate & Plan Stage Deliverables:

- Project Management Plan
- Initial Project Schedule

Initiate & Plan stage acceptance criteria:

- All stage deliverables accepted based on acceptance criteria previously defined
- Project governance defined
- Project portal made available to the City
- Stakeholder meeting complete
- GIS Data Production Ready
- Completed Infrastructure Requirements and Design Document
- System Passes Infrastructure Audit (as applicable)

6.2 Assess & Define

The Assess & Define stage will provide an opportunity to gather information related to current City business processes. This information will be used to identify and define business processes utilized with Tyler software. The City collaborates with Tyler providing complete and accurate information to Tyler staff and assisting in analysis, understanding current workflows and business processes.

6.2.1 Solution Orientation

The Solution Orientation provides the Project stakeholders a high-level understanding of the solution functionality prior to beginning the current and future state analysis. The primary goal is to establish a foundation for upcoming conversations regarding the design and configuration of the solution.

Tyler utilizes a variety of tools for the Solution Orientation, focusing on City team knowledge transfer such as: eLearning, documentation, or walkthroughs. The City team will gain a better understanding of the major processes and focus on data flow, the connection between configuration options and outcome, integration, and terminology that may be unique to Tyler's solution.

Objectives:

- Provide a basic understanding of system functionality.
- Prepare the City for current and future state analysis.

STAGE 2	Solution Orientation																	
	Tyler								City									
RACI MATRIX KEY: R = Responsible A = Accountable C = Consulted I = Informed	Executive Manager	Implementation Manager	Project Manager	Implementation Consultant	Data Experts	Modification Services	Technical Services	Client Services	Executive Sponsor	Steering Committee	Project Manager	Functional Leads	Change Management Leads	Subject Matter Experts (Power	Department Heads	End Users	Technical Leads
Provide pre-requisites			A	R							I	I		I	I		I
Complete pre-requisites											A	R		C			C
Conduct orientation			A	R							I	I		I	I		I

Inputs	Solution orientation materials
	Training Plan

6.2.2 Current & Future State Analysis

The Current & Future State Analysis provides the Project stakeholders and Tyler an understanding of process changes that will be achieved with the new system.

The City and Tyler will evaluate current state processes, options within the new software, pros and cons of each based on current or desired state and make decisions about the future state configuration and processing. This may occur before or within the same timeframe as the configuration work package. The options within the new software will be limited to the scope of this implementation and will make use of standard Tyler functionality.

The City will adopt the existing Tyler solution wherever possible to avoid project schedule and quality risk from over customization of Tyler products. It is the City's responsibility to verify that in-scope requirements are being met throughout the implementation if functional requirements are defined as part of the contract. The following guidelines will be followed when evaluating if a modification to the product is required:

- A reasonable business process change is available.
- Functionality exists which satisfies the requirement.
- Configuration of the application satisfies the requirement.
- An in-scope modification satisfies the requirement.

Requirements that are not met will follow the agreed upon change control process and can have impacts on the project schedule, scope, budget, and resource availability.

STAGE 2	Current & Future State Analysis	
	Tyler	City

RACI MATRIX KEY: R = Responsible A = Accountable C = Consulted I = Informed	Executive Manager	Implementation Manager	Project Manager	Implementation Consultant	Data Experts	Modification Services	Technical Services	Client Services	Executive Sponsor	Steering Committee	Project Manager	Functional Leads	Change Management Leads	Subject Matter Experts (Power	Department Heads	End Users	Technical Leads
Current State process review			A	R	I	I	I				C	C	C	C			C
Discuss future-state options			A	R	C	C	C				C	C	C	C			C
Make future-state decisions (non-COTS)			C	C	C	C	C				A	R	I	C			C
Document anticipated configuration options required to support future state			A	R	C	C	C				I	I	I	I			I

Inputs	City current state documentation
	Solution Orientation completion

Outputs / Deliverables		Acceptance Criteria [only] for Deliverables
	Documentation that describes future-state decisions and configuration options to support future-state decisions.	Delivery of document

Work package assumptions:

- City attendees possess sufficient knowledge and authority to make future state decisions.
- The City is responsible for any documentation of current state business processes.
- The City can effectively communicate current state processes.

6.2.3 Conversion Assessment

Data Conversions are a major effort in any software implementation. Tyler's conversion tools facilitate the predictable, repeatable conversion process that is necessary to support a successful transition to the Tyler system. The first step in this process is to perform an assessment of the existing ("legacy") system(s), to better understand the source data, risks, and options available. Once the data has been analyzed, the plan for data conversion is completed and communicated to the appropriate stakeholders.

Objectives:

- Communicate a common understanding of the project goals with respect to data.
- Ensure complete and accurate source data is available for review/transfer.
- Map the data from the source to the Tyler system.
- Document the data conversion/loading approach.

STAGE 2	Data Conversion Assessment																
	Tyler								City								
RACI MATRIX KEY: R = Responsible A = Accountable C = Consulted I = Informed	Executive Manager	Implementation Manager	Project Manager	Implementation Consultant	Data Experts	Modification Services	Technical Services	Client Services	Executive Sponsor	Steering Committee	Project Manager	Functional Leads	Change Management Leads	Subject Matter Experts (Power	Department Heads	End Users	Technical Leads
Extract Data from Source Systems			I		C						A						R
Review and Scrub Source Data			I	I	I						A	R		C			I
Build/Update Data Conversion Plan			R	C	C						C	I	I	I			I

Inputs	City Source data
	City Source data Documentation (if available)

Outputs / Deliverables		Acceptance Criteria [only] for Deliverables
	Data Conversion Plan built/updated	City Acceptance of Data Conversion Plan, if Applicable

Work package assumptions:

- Tyler will be provided with data from the Legacy system(s) in a mutually agreed upon format.
- Tyler will work with the City representatives to identify business rules before writing the conversion.
- City subject matter experts and resources most familiar with the current data will be involved in the data conversion planning effort.

6.2.4 Intentionally left blank.

6.2.5 Intentionally left blank.

6.2.6 Control Point 2: Assess & Define Stage Acceptance

Acceptance criteria for this Stage includes completion of all criteria listed below.

Note: Advancement to the Prepare Solution Stage is dependent upon Tyler's receipt of the Stage Acceptance.

Assess & Define Stage Deliverables:

- Documentation of future state decisions and configuration options to support future state decisions.
- Modification specification document.

- Assess & Define Stage Acceptance Criteria:
- All stage deliverables accepted based on criteria previously defined.
- Solution Orientation is delivered.
- Conversion data extracts are received by Tyler.
- Data conversion plan built.

6.3 Prepare Solution

During the Prepare Solution stage, information gathered during the Initiate & Plan and Assess & Define stages will be used to install and configure the Tyler software solution. Software configuration will be validated by the City against future state decisions defined in previous stages and processes refined as needed to ensure business requirements are met.

6.3.1 Initial System Deployment

The timely availability of the Tyler Solution is important to a successful Project implementation. The success and timeliness of subsequent work packages are contingent upon the initial system deployment of Tyler Licensed Software on an approved network and infrastructure. Delays in executing this work package can affect the project schedule.

Objectives:

- All licensed software is installed and operational.
- The City can access the software.

STAGE 3	Initial System Deployment (Hosted/SaaS)*																
	Tyler								City								
RACI MATRIX KEY: R = Responsible A = Accountable C = Consulted I = Informed	Executive Manager	Implementation Manager	Project Manager	Implementation Consultant	Data Experts	Modification Services	Technical Services	Client Services	Executive Sponsor	Steering Committee	Project Manager	Functional Leads	Change Management Leads	Subject Matter Experts (Power	Department Heads	End Users	Technical Leads
Prepare hosted environment			A				R				I						C
Install Licensed Software with Initial Database on Server(s) for Included Environments			A				R				I						C
Install Licensed Software on City Devices (if applicable)			I				C				A						R

Tyler System Administration Training (if applicable)			A				R				I						C

Outputs / Deliverables		Acceptance Criteria [only] for Deliverables
	Licensed Software is Installed on the Server(s)	Software is accessible
	Licensed Software is Installed on City Devices (if applicable)	Software is accessible
	Installation Checklist/System Document	System Passes
	Infrastructure Design Document (C&J – If Applicable)	

Work package assumptions:

- The most current available version of the Tyler Licensed Software will be installed.
- The City will provide network access for Tyler modules, printers, and Internet access to all applicable City and Tyler Project staff.

6.3.2 Configuration

The purpose of Configuration is to prepare the software product for validation.

Tyler staff collaborates with the City to complete software configuration based on the outputs of the future state analysis performed during the Assess and Define Stage. The City collaborates with Tyler staff iteratively to validate software configuration.

Objectives:

- Software is ready for validation.
- Educate the City Power User how to configure and maintain software.
- Prepare standard interfaces for process validation (if applicable).

STAGE 3	Configuration																
	Tyler								City								
RACI MATRIX KEY: R = Responsible A = Accountable C = Consulted I = Informed	Executive Manager	Implementation Manager	Project Manager	Implementation Consultant	Data Experts	Modification Services	Technical Services	Client Services	Executive Sponsor	Steering Committee	Project Manager	Functional Leads	Change Management Leads	Subject Matter Experts (Power	Department Heads	End Users	Technical Leads
Conduct configuration training			A	R							I	C		C			

Complete Tyler configuration tasks (where applicable)			A	R							I	I		I			
Complete City configuration tasks (where applicable)			I	C							A	R		C			
Standard interfaces configuration and training (if applicable)			A	R			C				I	C		C			C
Updates to Solution Validation testing plan			C	C							A	R		C			C

Inputs	Documentation that describes future state decisions and configuration options to support future state decisions.

Outputs / Deliverables		Acceptance Criteria [only] for Deliverables
	Configured System	N/A

Work package assumptions:

- Tyler provides guidance for configuration options available within the Tyler software. The City is responsible for making decisions when multiple options are available.

6.3.3 Process Refinement

Tyler will educate the City users on how to execute processes in the system to prepare them for the validation of the software. The City collaborates with Tyler staff iteratively to validate software configuration options to support future state.

Objectives:

- Ensure that the City understands future state processes and how to execute the processes in the software.
- Refine each process to meet the business requirements.
- Validate standard interfaces, where applicable.
- Validate forms and reports, where applicable.

STAGE 3	Process Refinement																
	Tyler								City								
RACI MATRIX KEY: R = Responsible A = Accountable C = Consulted I = Informed	Executive Manager	Implementation Manager	Project Manager	Implementation Consultant	Data Experts	Modification Services	Technical Services	Client Services	Executive Sponsor	Steering Committee	Project Manager	Functional Leads	Change Management Leads	Subject Matter Experts (Power	Department Heads	End Users	Technical Leads

Conduct process training			A	R							I	C	I	C			
Confirm process decisions			I	C						A	R	C	I	C			
Test configuration			I	C							A	R		C			
Refine configuration (City Responsible)			I	C							A	R		C			
Refine configuration (Tyler Responsible)			A	R							I	I		I			
Validate interface process and results			I	C			C				A	R		C			C
Update City-specific process documentation (if applicable)			I	C							A	R		C			
Updates to Solution Validation testing plan			C	C							A	R		C			C

Inputs	Initial Configuration
	Documentation that describes future state decisions and configuration options to support future state decisions.
	Solution validation test plan

Outputs / Deliverables		Acceptance Criteria [only] for Deliverables
	Updated solution validation test plan	
	Completed City-specific process documentation (completed by City)	

Work package assumptions:

- None

6.3.4 Conversion Delivery

The purpose of this task is to transition the City's data from their source ("legacy") system(s) to the Tyler system(s). The data will need to be mapped from the legacy system into the new Tyler system format. A well-executed data conversion is key to a successful cutover to the new system(s).

With guidance from Tyler, the City will review specific data elements within the system and identify / report discrepancies. Iteratively, Tyler will collaborate with the City to address conversion discrepancies. This process will allow for clean, reconciled data to transfer from the source system(s) to the Tyler system(s). Reference Conversion Appendix for additional detail.

Objectives:

- Data is ready for production (Conversion).

STAGE 3	Data Delivery & Conversion																
	Tyler								City								
RACI MATRIX KEY: R = Responsible A = Accountable C = Consulted I = Informed	Executive Manager	Implementation Manager	Project Manager	Implementation Consultant	Data Experts	Modification Services	Technical Services	Client Services	Executive Sponsor	Steering Committee	Project Manager	Functional Leads	Change Management Leads	Subject Matter Experts (Power	Department Heads	End Users	Technical Leads
Provide data crosswalks/code mapping tool			A	C	R						I	I		I			
Populate data crosswalks/code mapping tool			I	C	C						A	R		C			
Iterations: Conversion Development			A	C	R						I						I
Iterations: Deliver converted data			A		R		I				I						I
Iterations: Proof/Review data and			C	C	C						A	R		C			C

reconcile to source system	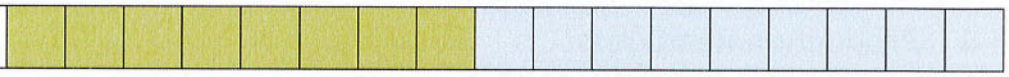

Inputs	
	Data Conversion Plan
	Configuration

Outputs / Deliverables		Acceptance Criteria [only] for Deliverables
	Code Mapping Complete / Validated	N/A
	Conversion Iterations / Reviews Complete	Conversion complete, verified, and ready for final pass

Work package assumptions:

- The City will provide a single file layout per source system as identified in the investment summary.
- The City subject matter experts and resources most familiar with the current data will be involved in the data conversion effort.
- The City project team will be responsible for completing the code mapping activity, with assistance from Tyler.

6.3.5 Intentionally left blank.

6.3.6 Intentionally left blank.

6.3.7 Control Point 3: Prepare Solution Stage Acceptance

Acceptance criteria for this Stage includes all criteria listed below in each Work Package.

Note: Advancement to the Production Readiness Stage is dependent upon Tyler's receipt of the Stage Acceptance.

Prepare Solution Stage Deliverables:

- Licensed software is installed.
- Installation checklist/system document.
- Updated solution design document (Data & Insights only).
- Prioritized data sets for review in Tyler system (Data & Insights only).
- Conversion iterations and reviews complete.

Prepare Solution Stage Acceptance Criteria:

- All stage deliverables accepted based on criteria previously defined.
- Software is configured.
- Solution validation test plan has been reviewed and updated if needed.

6.4 Production Readiness

Activities in the Production Readiness stage will prepare the City team for go-live through solution validation, the development of a detailed go-live plan and end user training. A readiness assessment will be conducted with the City to review the status of the project and the organizations readiness for go-live.

6.4.1 Solution Validation

Solution Validation is the end-to-end software testing activity to ensure that the City verifies all aspects of the Project (hardware, configuration, business processes, etc.) are functioning properly, and validates that all features and functions per the contract have been deployed for system use.

Objectives:

- Validate that the solution performs as indicated in the solution validation plan.
- Ensure the City organization is ready to move forward with go-live and training (if applicable).

STAGE 4	Solution Validation																	
	Tyler								City									
RACI MATRIX KEY: R = Responsible A = Accountable C = Consulted I = Informed	Executive Manager	Implementation Manager	Project Manager	Implementation Consultant	Data Experts	Modification Services	Technical Services	Client Services	Executive Sponsor	Steering Committee	Project Manager	Functional Leads	Change Management Leads	Subject Matter Experts (Power	Department Heads	End Users	Technical Leads
Update Solution Validation plan			A	R	C						C	C		C			
Update test scripts (as applicable)			C	C	C						A	R		C			
Perform testing			C	C	C						A	R		C			
Document issues from testing			C	C	C						A	R		C			
Perform required follow-up on issues			A	R	C						C	C		C			

Inputs	Solution Validation plan
	Completed work product from prior stages (configuration, business process, etc.)

Outputs / Deliverables		Acceptance Criteria [only] for Deliverables
	Solution Validation Report	City updates report with testing results

Work package assumptions:

- Designated testing environment has been established.

- Testing includes current phase activities or deliverables only.

6.4.2 Go-Live Readiness

Tyler and the City will ensure that all requirements defined in Project planning have been completed and the Go-Live event can occur, as planned. A go-live readiness assessment will be completed identifying risks or actions items to be addressed to ensure the City has considered its ability to successfully Go-Live. Issues and concerns will be discussed, and mitigation options documented. Tyler and the City will jointly agree to move forward with transition to production. Expectations for final preparation and critical dates for the weeks leading into and during the Go-Live week will be planned in detail and communicated to Project teams.

Objectives:

- Action plan for go-live established.
- Assess go-live readiness.
- Stakeholders informed of go-live activities.

STAGE 4	Go-Live Readiness																
	Tyler								City								
RACI MATRIX KEY: R = Responsible A = Accountable C = Consulted I = Informed	Executive Manager	Implementation Manager	Project Manager	Implementation Consultant	Data Experts	Modification Services	Technical Services	Client Services	Executive Sponsor	Steering Committee	Project Manager	Functional Leads	Change Management Leads	Subject Matter Experts (Power	Department Heads	End Users	Technical Leads
Perform Readiness Assessment	I	A	R	C	C	I	C	I	I	I	I		I				I
Conduct Go-Live planning session		A	R	C							C	C	C	C	C		C
Order peripheral hardware (if applicable)			I							A	R						C
Confirm procedures for Go-Live issue reporting & resolution		A	R	I	I	I	I				C	C	I	I	I	I	I
Develop Go-Live checklist		A	R	C	C						C	C	I	C			C
Final system infrastructure review (where applicable)			A				R				C						C

Inputs	Future state decisions
	Go-live checklist

Outputs / Deliverables		Acceptance Criteria [only] for Deliverables
	Updated go-live checklist	Updated Action plan and Checklist for go-live delivered to the City

Work package assumptions:

- None

6.4.3 End User Training

End User Training is a critical part of any successful software implementation. Using a training plan previously reviewed and approved, the Project team will organize and initiate the training activities.

Train the Trainer: Tyler provides one occurrence of each scheduled training or implementation topic. City users who attended the Tyler sessions may train additional users. Additional Tyler led sessions may be contracted at the applicable rates for training.

Tyler will provide standard application documentation for the general use of the software. It is not Tyler's responsibility to develop City specific business process documentation. City-led training labs using City specific business process documentation if created by the City can be added to the regular training curriculum, enhancing the training experiences of the end users.

Objectives:

- End users are trained on how to use the software prior to go-live.
- The City is prepared for on-going training and support of the application.

STAGE 4	End User Training																
	Tyler								City								
RACI MATRIX KEY: R = Responsible A = Accountable C = Consulted I = Informed	Executive Manager	Implementation Manager	Project Manager	Implementation Consultant	Data Experts	Modification Services	Technical Services	Client Services	Executive Sponsor	Steering Committee	Project Manager	Functional Leads	Change Management Leads	Subject Matter Experts (Power	Department Heads	End Users	Technical Leads
Update training plan		A	R	C							C		I		C		
End User training (Tyler-led)		A	R	C							C	C	I	C	C	C	
Train-the-trainer		A	R	C							C	C	I	C			
End User training (City-led)			C	C							A	R	I	C	C	C	

Inputs	Training Plan
	List of End Users and their Roles / Job Duties
	Configured Tyler System

Outputs / Deliverables		Acceptance Criteria [only] for Deliverables
	End User Training	City signoff that training was delivered

Work package assumptions:

- The City project team will work with Tyler to jointly develop a training curriculum that identifies the size, makeup, and subject-area of each of the training classes.
- Tyler will work with the City as much as possible to provide end-user training in a manner that minimizes the impact to the daily operations of City departments.
- The City will be responsible for training new users after go-live (exception—previously planned or regular training offerings by Tyler).

6.4.4 Control Point 4: Production Readiness Stage Acceptance

Acceptance criteria for this stage includes all criteria listed below. Advancement to the Production stage is dependent upon Tyler's receipt of the stage acceptance.

Production Readiness stage deliverables:

- Solution Validation Report.
- Update go-live action plan and checklist.
- End user training.

Production Readiness stage acceptance criteria:

- All stage deliverables accepted based on criteria previously defined.
- Go-Live planning session conducted.

6.5 Production

Following end user training the production system will be fully enabled and made ready for daily operational use as of the scheduled date. Tyler and the City will follow the comprehensive action plan laid out during Go-Live Readiness to support go-live activities and minimize risk to the Project during go-live. Following go-live, Tyler will work with the City to verify that implementation work is concluded, post go-live activities are scheduled, and the transition to Client Services is complete for long-term operations and maintenance of the Tyler software.

6.5.1 Go-Live

Following the action plan for Go-Live, defined in the Production Readiness stage, the City and Tyler will complete work assigned to prepare for Go-Live.

The City provides final data extract and Reports from the Legacy System for data conversion and Tyler executes final conversion iteration, if applicable. If defined in the action plan, the City manually enters any data added to the Legacy System after final data extract into the Tyler system.

Tyler staff collaborates with the City during Go-Live activities. The City transitions to Tyler software for day-to day business processing.

Some training topics are better addressed following Go-Live when additional data is available in the system or based on timing of applicable business processes and will be scheduled following Go-Live per the Project Schedule.

Objectives:

- Execute day to day processing in Tyler software.

- City data available in Production environment.

STAGE 5	Go-Live																
	Tyler								City								
RACI MATRIX KEY: R = Responsible A = Accountable C = Consulted I = Informed	Executive Manager	Implementation Manager	Project Manager	Implementation Consultant	Data Experts	Modification Services	Technical Services	Client Services	Executive Sponsor	Steering Committee	Project Manager	Functional Leads	Change Management Leads	Subject Matter Experts (Power	Department Heads	End Users	Technical Leads
Provide final source data extract, if applicable			C		C						A						R
Final source data pushed into production environment, if applicable			A	C	R						I	C		C			C
Proof final converted data, if applicable			C	C	C						A	R		C			
Complete Go-Live activities as defined in the Go-Live action plan			C	C	C					A	R	C	I	C			
Provide Go-Live assistance			A	R	C	C		I			C	C	I	C		I	C

Inputs	Comprehensive Action Plan for Go-Live
	Final source data (if applicable)

Outputs / Deliverables		Acceptance Criteria [only] for Deliverables
	Data is available in production environment	City confirms data is available in production environment

Work package assumptions:

- The City will complete activities documented in the action plan for Go-Live as scheduled.
- External stakeholders will be available to assist in supporting the interfaces associated with the Go-Live live process.
- The City business processes required for Go-Live are fully documented and tested.
- The City Project team and subject matter experts are the primary point of contact for the end users when reporting issues during Go-Live.
- The City Project Team and Power User's provide business process context to the end users during Go-Live.
- The Tyler Go-Live support team is available to consult with the City teams as necessary.
- The Tyler Go-Live support team provides standard functionality responses, which may not be tailored to the local business processes.

6.5.2 Transition to Client Services

This work package signals the conclusion of implementation activities for the Phase or Project with the exception of agreed-upon post Go-Live activities. The Tyler project manager(s) schedules a formal transition of the City onto the Tyler Client Services team, who provides the City with assistance following Go-Live, officially transitioning the City to operations and maintenance.

Objectives:

- Ensure no critical issues remain for the project teams to resolve.
- Confirm proper knowledge transfer to the City teams for key processes and subject areas.

STAGE 5	Transition to Client Services																
	Tyler								City								
RACI MATRIX KEY: R = Responsible A = Accountable C = Consulted I = Informed	Executive Manager	Implementation Manager	Project Manager	Implementation Consultant	Data Experts	Modification Services	Technical Services	Client Services	Executive Sponsor	Steering Committee	Project Manager	Functional Leads	Change Management Leads	Subject Matter Experts (Power	Department Heads	End Users	Technical Leads
Transfer City to Client Services and review issue reporting and resolution processes	I	I	A	I	I			R	I	I	C	C		C			
Review long term maintenance and continuous improvement			A					R			C	C		C			

Inputs	Open item/issues List

Outputs / Deliverables		Acceptance Criteria [only] for Deliverables
	Client Services Support Document	

Work package assumptions:

- No material project issues remain without assignment and plan.

6.5.3 Post Go-Live Activities

Some implementation activities are provided post-production due to the timing of business processes, the requirement of actual production data to complete the activities, or the requirement of the system being used in a live production state.

Objectives:

- Schedule activities that are planned for after Go-Live.
- Ensure issues have been resolved or are planned for resolution before phase or project close.

STAGE 5	Post Go-Live Activities																
	Tyler								City								
RACI MATRIX KEY: R = Responsible A = Accountable C = Consulted I = Informed	Executive Manager	Implementation Manager	Project Manager	Implementation Consultant	Data Experts	Modification Services	Technical Services	Client Services	Executive Sponsor	Steering Committee	Project Manager	Functional Leads	Change Management Leads	Subject Matter Experts (Power	Department Heads	End Users	Technical Leads
Schedule contracted activities that are planned for delivery after go-live		A	R	C	C	C	C	I			C	C	I	C			C
Determine resolution plan in preparation for phase or project close out		A	R	C	C	C		I			C	C	I	C			

Inputs	List of post Go-Live activities

Outputs / Deliverables		Acceptance Criteria [only] for Deliverables
	Updated issues log	

Work package assumptions:

- System is being used in a live production state.

6.5.4 Control Point 5: Production Stage Acceptance

Acceptance criteria for this Stage includes completion of all criteria listed below:

- Advancement to the Close stage is not dependent upon Tyler's receipt of this Stage Acceptance.
- Converted data is available in production environment.

Production Stage Acceptance Criteria:

- All stage deliverables accepted based on criteria previously defined.
- Go-Live activities defined in the Go-Live action plan completed.
- Client services support document is provided.

6.6 Close

The Close stage signifies full implementation of all products purchased and encompassed in the Phase or Project. The City transitions to the next cycle of their relationship with Tyler (next Phase of implementation or long-term relationship with Tyler Client Services).

6.6.1 Phase Closeout

This work package represents Phase completion and signals the conclusion of implementation activities for the Phase. The Tyler Client Services team will assume ongoing support of the City for systems implemented in the Phase.

Objectives:

- Agreement from Tyler and the City teams that activities within this phase are complete.

STAGE 6	Phase Close Out																
	Tyler								City								
RACI MATRIX KEY: R = Responsible A = Accountable C = Consulted I = Informed	Executive Manager	Implementation Manager	Project Manager	Implementation Consultant	Data Experts	Modification Services	Technical Services	Client Services	Executive Sponsor	Steering Committee	Project Manager	Functional Leads	Change Management Leads	Subject Matter Experts (Power	Department Heads	End Users	Technical Leads
Reconcile project budget and status of contract Deliverables	I	A	R						I	I	C						
Hold post phase review meeting		A	R	C	C	C	C				C	C	C	C			C
Release phase-dependent Tyler project resources	A	R	I								I						

Participants	Tyler	City
	Project Leadership	Project Manager
	Project Manager	Project Sponsor(s)
	Implementation Consultants	Functional Leads, Power Users, Technical Leads
	Technical Consultants (Conversion, Deployment, Development)	
	Client Services	

Inputs	Contract
	Statement of Work
	Project artifacts

Outputs / Deliverables		Acceptance Criteria [only] for Deliverables
	Final action plan (for outstanding items)	
	Reconciliation Report	
	Post Phase Review	

Work package assumptions:

- Tyler deliverables for the phase have been completed.

6.6.2 Project Closeout

Completion of this work package signifies final acceptance and formal closing of the Project.

At this time the City may choose to begin working with Client Services to look at continuous improvement Projects, building on the completed solution.

Objectives:

- Confirm no critical issues remain for the project teams to resolve.
- Determine proper knowledge transfer to the City teams for key processes and subject areas has occurred.
- Verify all deliverables included in the Agreement are delivered.

STAGE 6	Project Close Out																
	Tyler								City								
RACI MATRIX KEY: R = Responsible A = Accountable C = Consulted I = Informed	Executive Manager	Implementation Manager	Project Manager	Implementation Consultant	Data Experts	Modification Services	Technical Services	Client Services	Executive Sponsor	Steering Committee	Project Manager	Functional Leads	Change Management Leads	Subject Matter Experts (Power	Department Heads	End Users	Technical Leads
Conduct post project review		A	R	C	C	C	C				C	C	C	C			C
Deliver post project report to City and Tyler leadership	I	A	R						I	I	C						
Release Tyler project resources	A	R	I								I						

Inputs	Contract
	Statement of Work

Outputs / Deliverables		Acceptance Criteria [only] for Deliverables

	Post Project Report	City acceptance: Completed report indicating all project Deliverables and milestones have been completed

Work package assumptions:

- All project implementation activities have been completed and approved.
- No critical project issues remain that have not been documented and assigned.
- Final project budget has been reconciled and invoiced.
- All Tyler deliverables have been completed.

6.6.3 Control Point 6: Close Stage Acceptance

Acceptance criteria for this Stage includes completion of all criteria listed below.

Close Stage Deliverables:

- Post Project Report.

Close Stage Acceptance Criteria:

- Completed report indicating all Project deliverables and milestones have been completed.

7. General Assumptions

Tyler and the City will use this SOW as a guide for managing the implementation of the Tyler Project as provided and described in the Agreement. There are a few assumptions which, when acknowledged and adhered to, will support a successful implementation. Assumptions related to specific work packages are documented throughout the SOW. Included here are general assumptions which should be considered throughout the overall implementation process.

7.1 Project

- Project activities will begin after the Agreement has been fully executed.
- The City Project Team will complete their necessary assignments in a mutually agreed upon timeframe to meet the scheduled go-live date, as outlined in the Project Schedule.
- Sessions will be scheduled and conducted at a mutually agreeable time.
- Additional services, software modules and modifications not described in the SOW or Agreement will be considered a change to this Project and will require a Change Request Form as previously referenced in the definition of the Change Control Process.
- Tyler will provide a written agenda and notice of any prerequisites to the City project manager(s) ten (10) business days or as otherwise mutually agreed upon time frame prior to any scheduled on-site or remote sessions, as applicable.
- Tyler will provide guidance for configuration and processing options available within the Tyler software. If multiple options are presented by Tyler, the City is responsible for making decisions based on the options available.
- Implementation of new software may require changes to existing processes, both business and technical, requiring the City to make process changes.

- The City is responsible for defining, documenting, and implementing their policies that result from any business process changes.

7.2 Organizational Change Management

Unless otherwise contracted by Tyler, City is responsible for managing Organizational Change. Impacted City resources will need consistent coaching and reassurance from their leadership team to embrace and accept the changes being imposed by the move to new software. An important part of change is ensuring that impacted City resources understand the value of the change, and why they are being asked to change.

7.3 Resources and Scheduling

- City resources will participate in scheduled activities as assigned in the Project Schedule.
- The City team will complete prerequisites prior to applicable scheduled activities. Failure to do so may affect the schedule.
- Tyler and the City will provide resources to support the efforts to complete the Project as scheduled and within the constraints of the Project budget.
- Abbreviated timelines and overlapped Phases require sufficient resources to complete all required work as scheduled.
- Changes to the Project Schedule, availability of resources or changes in Scope will be requested through a Change Request. Impacts to the triple constraints (scope, budget, and schedule) will be assessed and documented as part of the change control process.
- The City will ensure assigned resources will follow the change control process and possess the required business knowledge to complete their assigned tasks successfully. Should there be a change in resources, the replacement resource should have a comparable level of availability, change control process buy-in, and knowledge.
- The City makes timely Project related decisions to achieve scheduled due dates on tasks and prepare for subsequent training sessions. Failure to do so may affect the schedule, as each analysis and implementation session is dependent on the decisions made in prior sessions.
- The City will respond to information requests in a comprehensive and timely manner, in accordance with the Project Schedule.
- The City will provide adequate meeting space or facilities, including appropriate system connectivity, to the project teams including Tyler team members.
- For on-site visits, Tyler will identify a travel schedule that balances the needs of the project and the employee.

7.4 Data

- Data will be converted as provided and Tyler will not create data that does not exist.
- The City is responsible for the quality of legacy data and for cleaning or scrubbing erroneous legacy data.
- Tyler will work closely with the City representatives to identify business rules before writing the conversion. The City must confirm that all known data mapping from source to target have been identified and documented before Tyler writes the conversion.
- All in-scope source data is in data extract(s).
- Each legacy system data file submitted for conversion includes all associated records in a single approved file layout.

- The City will provide the legacy system data extract in the same format for each iteration unless changes are mutually agreed upon in advance. If not, negative impacts to the schedule, budget and resource availability may occur and/or data in the new system may be incorrect.
- The City Project Team is responsible for reviewing the converted data and reporting issues during each iteration, with assistance from Tyler.
- The City is responsible for providing or entering test data (e.g., data for training, testing interfaces, etc.)

7.5 Facilities

- The City will provide dedicated space for Tyler staff to work with City resources for both on-site and remote sessions. If Phases overlap, City will provide multiple training facilities to allow for independent sessions scheduling without conflict.
- The City will provide staff with a location to practice what they have learned without distraction.

8. Glossary

Word or Term	Definition
Acceptance	Confirming that the output or deliverable is suitable and conforms to the agreed upon criteria.
Accountable	The one who ultimately ensures a task or deliverable is completed; the one who ensures the prerequisites of the task are met and who delegates the work to those responsible. [Also see RACI]
Application	A computer program designed to perform a group of coordinated functions, tasks, or activities for the benefit of the user.
Application Programming Interface (API)	A defined set of tools/methods to pass data to and received data from Tyler software products
Agreement	This executed legal contract that defines the products and services to be implemented or performed.
Business Process	The practices, policy, procedure, guidelines, or functionality that the client uses to complete a specific job function.
Business Requirements Document	A specification document used to describe Client requirements for contracted software modifications.
Change Request	A form used as part of the Change Control process whereby changes in the scope of work, timeline, resources, and/or budget are documented and agreed upon by participating parties.
Change Management	Guides how we prepare, equip and support individuals to successfully adopt change in order to drive organizational success & outcomes
Code Mapping [where applicable]	An activity that occurs during the data conversion process whereby users equate data (field level) values from the old system to the values available in the new system. These may be one to one or many to one. Example: Old System [Field = eye color] [values = BL, Blu, Blue] maps to New Tyler System [Field = Eye Color] [value = Blue].
Consulted	Those whose opinions are sought, typically subject matter experts, and with whom there is two-way communication. [Also see RACI]
Control Point	This activity occurs at the end of each stage and serves as a formal and intentional opportunity to review stage deliverables and required acceptance criteria for the stage have been met.
Data Mapping [where applicable]	The activity determining and documenting where data from the legacy system will be placed in the new system; this typically involves prior data analysis to understand how the data is currently used in the legacy system and how it will be used in the new system.
Deliverable	A verifiable document or service produced as part of the Project, as defined in the work packages.
Go-Live	The point in time when the Client is using the Tyler software to conduct daily operations in Production.
Informed	Those who are kept up to date on progress, often only on completion of the task or deliverable, and with whom there is just one-way communication. [Also see RACI]

Infrastructure	The composite hardware, network resources and services required for the existence, operation, and management of the Tyler software.
Interface	A connection to and potential exchange of data with an external system or application. Interfaces may be one way, with data leaving the Tyler system to another system or data entering Tyler from another system, or they may be bi-directional with data both leaving and entering Tyler and another system.
Integration	A standard exchange or sharing of common data within the Tyler system or between Tyler applications
Legacy System	The software from which a client is converting.
Modification	Custom enhancement of Tyler's existing software to provide features or functions to meet individual client requirements documented within the scope of the Agreement.
On-site	Indicates the work location is at one or more of the client's physical office or work environments.
Organizational Change	The process of changing an organization's strategies, processes, procedures, technologies, and culture, as well as the effect of such changes on the organization.
Output	A product, result or service generated by a process.
Peripheral devices	An auxiliary device that connects to and works with the computer in some way. Some examples: scanner, digital camera, printer.
Phase	A portion of the Project in which specific set of related applications are typically implemented. Phases each have an independent start, Go-Live and closure dates but use the same Implementation Plans as other Phases of the Project. Phases may overlap or be sequential and may have different Tyler resources assigned.
Project	The delivery of the software and services per the agreement and the Statement of Work. A Project may be broken down into multiple Phases.
RACI	A matrix describing the level of participation by various roles in completing tasks or Deliverables for a Project or process. Individuals or groups are assigned one and only one of the following roles for a given task: Responsible (R), Accountable (A), Consulted (C), or Informed (I).
Remote	Indicates the work location is at one or more of Tyler's physical offices or work environments.
Responsible	Those who ensure a task is completed, either by themselves or delegating to another resource. [Also see RACI]
Scope	Products and services that are included in the Agreement.

Solution	The implementation of the contracted software product(s) resulting in the connected system allowing users to meet Project goals and gain anticipated efficiencies.
Stage	The top-level components of the WBS. Each Stage is repeated for individual Phases of the Project.
Standard	Software functionality that is included in the base software (off-the-shelf) package; is not customized or modified.
Statement of Work (SOW)	Document which will provide supporting detail to the Agreement defining Project-specific activities, services, and Deliverables.
System	The collective group of software and hardware that is used by the organization to conduct business.
Test Scripts	The steps or sequence of steps that will be used to validate or confirm a piece of functionality, configuration, enhancement, or Use Case Scenario.
Training Plan	Document(s) that indicate how and when users of the system will be trained relevant to their role in the implementation or use of the system.
Validation (or to validate)	The process of testing and approving that a specific Deliverable, process, program, or product is working as expected.
Work Breakdown Structure (WBS)	A hierarchical representation of a Project or Phase broken down into smaller, more manageable components.
Work Package	A group of related tasks within a project.

Part 4: Appendices

9. Conversion

9.1 Enterprise Permitting & Licensing Conversion Summary

9.1.1 Community Development

- Permit Master basic information
- Plan Master basic information
- Plan & Permit Contacts
- Unique (keyed) contacts converted to global contacts
- Non-keyed contacts converted to a Memo Custom Field or standard note
- Sub-permit Associations – Visible in Workflow and Attached Records
- Reviews and Approvals
- Projects
- Permit Renewals
- Bonds and Escrow
- Contractors
- Workflow based on configured Enterprise Permitting & Licensing template customized only by inclusion/exclusion based on status, type or class of the associated permit, plan, etc.
- Inspections and Inspection Cases
- Meetings and Hearings
- Activities and Actions
- Conditions
- Fees
- Holds
- Notes
- Parcels and Addresses
- Payments and Fee History
- Zones
- Code Case Master basic information
- Code Requests
- Code Case Contacts and Properties
- Unique (keyed) contacts converted to global contacts
- Non-keyed contacts converted to a Memo Custom Field or standard note
- Violations
- Fees
- Payments
- Notes

9.1.2 Business Management

- Business Entity (Only for Business Licensing)
- License Master basic information
- License Contacts
- Unique (keyed) contacts converted to global contacts

- Non-keyed contacts converted to a Memo Custom Field or standard note
- Reviews and Approvals – Converted to Activity
- Fees
- Bonds and Escrow
- Activities and Actions
- Conditions
- Notes
- Holds
- Workflow based on configured Enterprise Permitting & Licensing template customized only by inclusion/exclusion based on status, type or class of the associated license, code case, etc.
- Contractors
- Business Types and NAICS Codes
- Payment and Fee History
- Code Case Master basic information
- Code Requests
- Code Case Contacts and Properties
- Unique (keyed) contacts converted to global contacts
- Non-keyed contacts converted to a Memo Custom Field or standard note
- Parcels and Addresses
- Meetings and Hearings
- Violations
- Fees
- Payments
- Notes

9.2 Enterprise ERP Conversion Summary

9.2.1 Accounting COA

- Chart of Accounts segments, objects, character codes, project codes (if applicable), organization codes (if applicable), control accounts budget rollups, fund attributes, due to/due from accounts
- Requires the use of a Tyler provided spreadsheet for design and entry of the data to be converted

9.2.2 Accounting - Actuals

- Summary account balances
- Up to 3 years

9.2.3 Accounting - Budgets

- Original budget, budget adjustments, revised budget summaries for accounts
- Up to 3 years

9.2.4 Accounts Payable Master

- Vendor Master file including names, addresses, SSN/FID, contacts, phone numbers
- Multiple remittance addresses
- Year-to-date 1099 amounts

9.2.5 Accounts Payable - Checks

- Check header data including vendor, warrant, check number, check date, overall check amount, GL cash account and clearing information
- Check detail data including related document and invoice numbers for each check
- Up to 5 years

9.2.6 Accounts Payable - Invoices

- Invoice header data containing general information for the invoice
- Invoice detail data containing line-specific information for the invoice
- Up to 5 years

9.2.7 Capital Assets Master

- Asset description, status, acquisition quantity, date and amount, codes for asset class, subclass, department, custodian, flags for capitalization and depreciation, estimated life, serial number, model, model year, depreciation method, life-to-date depreciation amount, last depreciation date, disposal information (if any), purchase information, if any (vendor, PO, Invoice)

9.2.8 General Billing CID

- Customer information

9.2.9 General Billing – Recurring Invoices

- General Billing Invoices that are sent on a regular basis
- Header records with general information about the invoice
- Detail records with line-specific information

9.2.10 General Billing – Bills

- 5 years of open and closed invoices
- General Ledger information so open invoices can be processed in Enterprise ERP

9.2.11 Project Grant Accounting

- Segments, account strings and fund string allocation table
- Requires the use of a Tyler provided (Chart of Accounts) spreadsheet for design and entry of the data to be converted

9.2.12 Project Grant Accounting - Actuals

- Summary project ledger string balances. If linking to GL, must be converted at the same time.
- Up to 3 years

9.2.13 Project Grant Accounting – Budget

- Original project ledger budget amounts. If linking to GL, must be converted at the same time.
- Up to 3 years

9.2.14 Purchase Orders

- Open purchase orders header data including vendor, buyer, date, accounting information, etc.
- Open purchase orders detail data including line-item descriptions, quantities, amounts, etc.

9.2.15 Payroll

- Payroll Employee Master data including data such as name, address, SSN, legacy employee ID, date of birth, hire date, activity status (such as active/inactive), leave/termination code and date, phone(s), e-address, marital status, gender, race, personnel status (such as full-time, part-time, etc.), highest degree, advice-delivery (print/email/both) and check location, plus primary group, job, location, and account information

9.2.16 Payroll - Deductions

- Employee Deductions - including employee ID, deduction codes, tax information, and direct deposit information

9.2.17 Payroll – Accrual Balances

- Employee Accrual Balances including Vacation, Holiday, and other Leave balances
- Start of year balance, earned to date, used to date

9.2.18 Payroll – Accumulators

- YTD, QTD, MTD amounts for employee pay and deductions
- Needed for mid-calendar-year go-live
- May not be needed if converting earnings/deductions history
- Up to 5 years

9.2.19 Payroll – Check History

- Up to 5 years, additional years must be quoted. We convert amounts for earnings and deductions in employee check history, check number and date.

9.2.20 Payroll – State Retirement Tables

- Specific state-required data, plus related service years information, when appropriate
- Needed for some states

10. Additional Appendices

10.1 Enterprise Permitting & Licensing Definitions

10.1.1 "Template Business Transactions"

- A pre-defined and pre-configured Enterprise Permitting & Licensing business process from Enterprise Permitting & Licensing's "Best Management Template".
- The following modifications to Template Business Transactions are considered within scope:
  - Any changes to required inspections within the workflow
  - Any changes to the required plan reviews within the workflow
  - Adding up to 2 additional actions to the workflow
  - Configuration of fees, allowing creation of up to 3 new fees to accommodate
  - Any changes to custom field layouts that are directly related to fees or included reports
- Customization/Configuration of any of these parameters beyond the scope listed above will require the respective business process to be considered a "Unique Business Transaction", as described below.

Note: All transaction counts are quantified in the comments of the Investment Summary.

10.1.2 "Unique Business Transactions"

- Unique configuration of workflow or business process steps & actions, including output actions
- Unique Fee configuration
- Unique Custom field configuration

10.1.3 "Geo-Rules"

- An automation event that references GIS data. Current geo-rule action types are:

Alert	Displays a pop-up with a custom message to the user, notifying them of certain spatial data (i.e., noise abatement zones; flood zones; etc.).
Block	Places a block on the case and prevents any progress or updates from occurring on the record (i.e., no status changes can be completed, no fees can be paid, the workflow cannot be managed, etc.)
Block with Override	Places a block on the case and prevents any progress or updates from occurring on the record (i.e., no status changes can be completed, no fees can be paid, the workflow cannot be managed, etc.) However, the block can be overridden by end-users who have been given the proper securities.
Fee Date	Populates the CPI vesting date on the record if vesting maps are used by the jurisdiction.
Field Mapping	A custom field or any field inherent in the Enterprise Permitting & Licensing application can automatically populate with information based on spatial data.
Required Action	A workflow action can automatically populate in the workflow details for the particular record (i.e., plan, permit, code case, etc.) that requires the action based on certain spatial data related to the case.
Required Step	A workflow step can automatically populate in the workflow details for the particular record (i.e., plan, permit, code case, etc.) that requires the step based on certain spatial data related to the case.
Zone Mapping	The zone(s) automatically populate on the "Zones" tab of the record (i.e., plan, permit, code case, etc.).

10.1.4 "Automation Events"

10.1.4.1 "Intelligent Objects (IO)"

- Key components for automatically and reactively triggering geo-rules, computing fees, and generating emails, alerts, and other notifications.

10.1.4.2 "Intelligent Automation Agents (IAA)"

- A tool designed to automate task in a proactive manner by setting values and generating emails and other tasks. On a nightly basis, a Windows service sweeps the Enterprise Permitting & Licensing system looking for IAA tasks that need to be run, then the associated actions are performed. The IAA does not generate alerts or errors. Custom SQL queries are not Tyler deliverables.

10.1.5 "Enterprise Permitting & Licensing SDK/API (Toolkits)"

- APIs developed by Tyler Technologies for extending the Enterprise Permitting & Licensing Framework and functionality to external agencies and systems. Full documentation is available for each toolkit upon request.

Note: The Enterprise Permitting & Licensing toolkits and related documentation are simply tools that allow clients to create applications and integrations. The purchase of a toolkit/API does not imply any development related services from Tyler Technologies. The City is responsible for working with their IT staff and VARs to develop any necessary applications and integrations except as otherwise noted in the Investment Summary or for any "in-scope" integrations.

10.2 Koa Hills Services

Historical Archive Database Scope of Work

Introduction

Koa Hills Consulting (KHC) will deliver a web-based data archival system to maintain access to historical data in addition to the data that is converted directly to Munis. This includes information that is not typically converted into Munis, such as closed purchase orders or inactive vendors, as well as additional years of historical data that the client needs. The build out of the historical archive database uses the same Munis data conversion templates and mappings created during the implementation process. Users will be able to access an intuitive web-based application which looks and feels like the Munis Central applications in order to retrieve historical information.

The historical information includes the following areas of data:

- General Ledger
- Projects
- Budgets
- Vendors
- Accounts Payable Checks

- Accounts Payable Invoices
- Purchase Orders
- Contracts

Application Features

The historical archive database is a web-based module which provides menu driven access to a series of screens and reports designed for user access. The web front end is very similar in nature to the inquiry options within Munis to provide users with a familiar and intuitive interface. The screens provide the ability to perform advanced searches and return data which may then be viewed and exported to Excel, if needed.

The following screens will be available within the historical archive database. Information on these screens will correlate with the Munis screens whenever possible; however, certain pieces of information which would become stale over time are omitted. All data available through the Munis Conversion programs have the opportunity for inclusion in the historical archive database.

Screen	Description
Account Central	All related financial activity for a given Munis GL
Journal Entries	
Project Central	All related financial activity for a given Munis GL Organization, Object and Project including budget, actual and encumbrance data.
Budget Central	
Invoice Central	AP Invoice information with associated purchase orders and payment details.
Checks Central	
Purchase Orders	Purchase order and line-item detail with associated AP Invoices.
Contracts Central	Contract information with associated AP Invoices and Purchase Orders.
Vendor Central	All related financial activity for a vendor, and drill down into the detail in: Checks, Invoices, Purchase Order, Contracts.
Finance Codes	
Finance Reports	

The following reports will be available within the historical archive database. Information on these reports will correlate with the Munis screens whenever possible; however, certain pieces of information which would become stale over time are omitted. All data available through the Munis Conversion programs have the opportunity for inclusion in the historical archive database.

Report	Description
Accounts, Project Central	All related financial activity for a given Munis GL Organization, Object and Project including budget, actual and encumbrance data.
Vendor Central	All related financial activity for a vendor, and drill down into the detail in: Checks, Invoices, Purchase Order, Contracts.
Purchasing Central	Purchase order and line-item detail with associated AP Invoices.
Contracts Central	Contract information with associated AP Invoices and Purchase Orders.
Invoice Central	AP Invoice information with associated purchase orders and payment details.

- Reports will be provided in SSRS
- Customer can develop additional reports in SSRS
- KHC can develop additional reports for the client by request and for an additional cost

Deliverables

The following deliverables will be provided with the solution:

- Web based application to access historical data
- Training to use the historical data application
- KHC will assist client in converting and populating data input spreadsheets to match mapping requirements
- Data conversion templates for mapping
  - KHC will use the same mapping spreadsheets as the Munis Data Conversion Team
- Historical data will be converted into the database using the Munis data structure

Client Responsibilities

- Client shall provide access to fulfill the necessary requirements to historical data files, data mapping expertise and any other necessary information to facilitate the archival process
- Client shall furnish legacy system documentation for data mapping, as needed
- Client shall furnish the required hardware to run the archival system unless the client chooses the SaaS option
- Client shall provide necessary access to the client internal network for installation and configuration if needed
- Client shall provide GL Account Crosswalk mapping for any legacy accounts which are desired to maintain for all years archived with the new updated Munis format
- Client shall assist with data validation and testing by running reports comparing totals and details on legacy data between systems

Hardware Requirements

If not using the KHC SaaS solution, the client will supply the stand-alone server with a recent version of Windows Server Operating System, SQL server, SSRS, and the Management Studio package. Though the

server is read only, Koa Hills recommends a duplicate hard drive backup to cover disasters and possible drive failures. Koa Hills will create a schema which closely matches that of Munis data migration for each sub-system.

Assumptions

- The server will be designed for administrative access only and there will be no layered user security.
- Data is consistent for all years. If the data has changed (ex. COA length changed at some point in the past and is different from the current data structure in Munis), then additional professional services may be required.
- Legacy system data will be converted from a single source. If there are multiple legacy systems, then additional professional services may be required.
- All work will be performed remotely. Travel costs are not included and will be billed as incurred if travel is required.

11. Project Timeline

11.1 ERP Project Timeline

The Project Timeline establishes a target start and end date for each Phase of the Project. The timeline needs to account for resource availability, business goals, size and complexity of the Project, and task duration requirements. These will be reviewed and adjusted, if needed, during the Initiate and Plan Stage. Refer to the Project Stages section of this SOW for information on work packages associated with each stage of the implementation.

The following dates may be revised based on the date the Agreement is signed and further refined during the course of the project. Tyler requires up to forty-five (45) days to move from Agreement signing to the Initiate & Plan Stage.

PROJECT TIMELINE

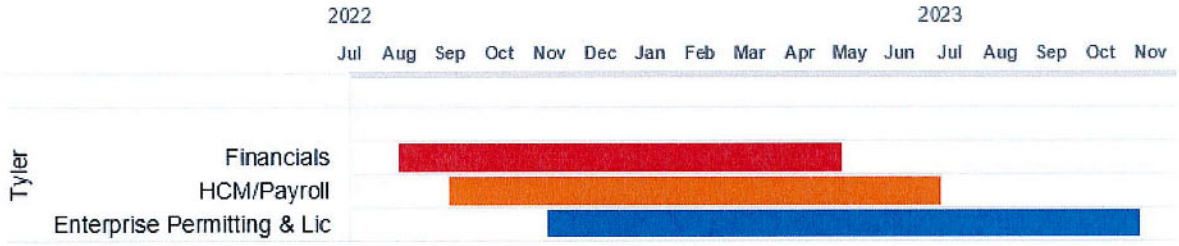

**If phase overlap is a concern for resource availability, some modules listed in the Financials phase can be postponed until a later time. Allowing the core financial elements to be implemented first will increase the success of the overall ERP project.

Phase	Functional Area(s)	Modules	Start Date	Go-Live Date
1	**Financials**	• Accounting/General Ledger • Accounts Payable • BMI Asset Track Interface • Budgeting • Capital Assets • Cash Management • Contract Management • eProcurement • General Billing • Purchasing • Project & Grant Accounting • Accounts Receivable • Cashiering • General Billing	Aug 2022 or as defined in the Project Plan and mutually agreed upon	May 2023 or as defined in the Project Plan and mutually agreed upon
2	**Human Capital Management**	• Payroll w/ ESS • Human Resources & Talent Management • Recruiting • Risk Management	Sept 2022 or as defined in the Project Plan and mutually agreed upon	July 2023 or as defined in the Project Plan and mutually agreed upon
	System Wide	• Enterprise Analytics & Reporting • Enterprise Forms Processing • Content Manager Core • Executive Insights[1]		
3	**Enterprise Permitting and Licensing**	• Business Management Suite • Community Development Suite • Civic Access-Bus Mgt • Civic Access-Comm Dev • E-reviews • Enterprise Permitting & Licensing • Enterprise Service Requests • My Civic • Report Toolkit • Workforce Mobile • GIS	Nov 2022 or as defined in the Project Plan and mutually agreed upon	Nov 2023 or as defined in the Project Plan and mutually agreed upon

[1] Executive Insights will be implemented as product suites go live and have data available for reporting.

11.2 Data & Insights Project Plan

Data & Insights Project Plan												
	Week											
	1	2	3	4	5	6	7	8	9	10	11	12
Initiate and Plan												
Assess and Define												
Prepare Solution												
Production Readiness												
Production												
Close												

11.3 My Civic Timeline

tyler technologies

ID	Task Name	M-1	M1	M2	M3	M4	M5	M6	M7	M8	M9	M10	M11	M12	M13	M14	M15	M16
	Sample Implementation Timeline																	
	Stage 1: Initiate and Plan (All applications)																	
	Stage 2: Assess & Define																	
	Stage 3: Prepare Solution																	
	Stage 4: Production Readiness																	
	Stage 5: Production																	
	Stage 6: Close																	
	Project Complete																	

example

This timeline is an example. Please use it as a general guide...ONLY. Its purpose is to demonstrate the order in which various products are typically implemented and the potential overlap of stages for each phase. The exact timing of each deliverable depends on many factors including, but not limited to, the client's ability to commit resources to the project, client blackout dates, and the alignment of client business practices with Tyler implementation methodology. Tyler makes no guarantees that implementation schedules will align with this example.

11.4 Intentionally left blank.

SOFTWARE AS A SERVICE AGREEMENT

This Software as a Service Agreement is made between Tyler Technologies, Inc. and Client.

WHEREAS, Client is a member of Sourcewell (formerly known as National Joint Powers Alliance) ("Sourcewell") under member number _____.

WHEREAS, Tyler participated in the competitive bid process in response to Sourcewell RFP #090320 by submitting a proposal, on which Sourcewell awarded Tyler a Sourcewell contract, numbered 090320-TTI (hereinafter, the "Sourcewell Contract");

WHEREAS, documentation of the Sourcewell competitive bid process, as well as Tyler's contract with and pricing information for Sourcewell is available at https://sourcewell-mn.gov/cooperative-purchasing/; and

WHEREAS, Client desires to purchase off the Sourcewell Contract to procure software functionality from Tyler, which Tyler agrees to deliver pursuant to the Sourcewell Contract and under the terms and conditions set forth below;

NOW THEREFORE, in consideration of the foregoing and of the mutual covenants and promises set forth in this Agreement, Tyler and Client agree as follows:

SECTION A – DEFINITIONS

- **"Agreement"** means this Software as a Service Agreement.
- **"Business Travel Policy"** means our business travel policy. A copy of our current Business Travel Policy is attached as Schedule 1 to Exhibit B.
- **"Client"** means City of Opa-Locka, Florida.
- **"Data"** means your data necessary to utilize the Tyler Software.
- **"Data Storage Capacity"** means the contracted amount of storage capacity for your Data identified in the Investment Summary.
- **"Defect"** means a failure of the Tyler Software to substantially conform to the functional descriptions set forth in our written proposal to you, or their functional equivalent. Future functionality may be updated, modified, or otherwise enhanced through our maintenance and support services, and the governing functional descriptions for such future functionality will be set forth in our then-current Documentation.
- **"Defined Users"** means the number of users that are authorized to use the SaaS Services. The Defined Users for the Agreement are as identified in the Investment Summary. If Exhibit A contains EnerGov labeled software, defined users mean the maximum number of named users that are authorized to use the EnerGov labeled modules as indicated in the Investment Summary.

- **"Developer"** means a third party who owns the intellectual property rights to Third Party Software.
- **"Documentation"** means any online or written documentation related to the use or functionality of the Tyler Software that we provide or otherwise make available to you, including instructions, user guides, manuals and other training or self-help documentation.
- **"Effective Date"** means the date by which both your and our authorized representatives have signed the Agreement.
- **"Force Majeure"** means an event beyond the reasonable control of you or us, including, without limitation, governmental action, war, riot or civil commotion, fire, natural disaster, or any other cause that could not with reasonable diligence be foreseen or prevented by you or us.
- **"Investment Summary"** means the agreed upon cost proposal for the products and services attached as Exhibit A.
- **"Invoicing and Payment Policy"** means the invoicing and payment policy. A copy of our current Invoicing and Payment Policy is attached as Exhibit B.
- **"Order Form"** means an ordering document that includes a quote or investment summary and specifying the items to be provided by Tyler to Client, including any addenda and supplements thereto.
- **"SaaS Fees"** means the fees for the SaaS Services identified in the Investment Summary.
- **"SaaS Services"** means software as a service consisting of system administration, system management, and system monitoring activities that Tyler performs for the Tyler Software, and includes the right to access and use the Tyler Software, receive maintenance and support on the Tyler Software, including Downtime resolution under the terms of the SLA, and Data storage and archiving. SaaS Services do not include support of an operating system or hardware, support outside of our normal business hours, or training, consulting or other professional services.
- **"SLA"** means the service level agreement. A copy of our current SLA is attached hereto as Exhibit C.
- **"Statement of Work"** means the industry standard implementation plan describing how our professional services will be provided to implement the Tyler Software, and outlining your and our roles and responsibilities in connection with that implementation. The Statement of Work is attached as Exhibit E.
- **"Support Call Process"** means the support call process applicable to all of our customers who have licensed the Tyler Software. A copy of our current Support Call Process is attached as Schedule 1 to Exhibit C.
- **"Third Party Hardware"** means the third party hardware, if any, identified in the Investment Summary.
- **"Third Party Products"** means the Third Party Software and Third Party Hardware.
- **"Third Party Services"** means the third party services, if any, identified in the Investment Summary.
- **"Third Party Software"** means the third party software, if any, identified in the Investment Summary.
- **"Third Party SaaS Services"** means software as a service provided by a third party, if any, identified in the Investment Summary.
- **"Third Party Terms"** means, if any, the end user license agreement(s) or similar terms for the Third Party Products or other parties' products or services, as applicable, and attached or indicated at Exhibit D.
- **"Tyler"** means Tyler Technologies, Inc., a Delaware corporation.
- **"Tyler Software"** means our proprietary software, including any integrations, custom

modifications, and/or other related interfaces identified in the Investment Summary and licensed by us to you through this Agreement.

- **"we", "us", "our"** and similar terms mean Tyler.
- **"you"** and similar terms mean Client.

SECTION B – SAAS SERVICES

1. Rights Granted. We grant to you the non-exclusive, non-assignable limited right to use the SaaS Services solely for your internal business purposes for the number of Defined Users only. The Tyler Software will be made available to you according to the terms of the SLA. You acknowledge that we have no delivery obligations and we will not ship copies of the Tyler Software as part of the SaaS Services. You may use the SaaS Services to access updates and enhancements to the Tyler Software, as further described in Section C(9). The foregoing notwithstanding, to the extent we have sold you perpetual licenses for Tyler Software, if and listed in the Investment Summary, for which you are receiving SaaS Services, your rights to use such Tyler Software are perpetual, subject to the terms and conditions of this Agreement including, without limitation, Section B(4). We will make any such software available to you for download.

2. SaaS Fees. You agree to pay us the SaaS Fees. Those amounts are payable in accordance with our Invoicing and Payment Policy. The SaaS Fees are based on the number of Defined Users and amount of Data Storage Capacity. You may add additional users or additional data storage capacity on the terms set forth in Section H(1). In the event you regularly and/or meaningfully exceed the Defined Users or Data Storage Capacity, we reserve the right to charge you additional fees commensurate with the overage(s).

3. Ownership.

   3.1 We retain all ownership and intellectual property rights to the SaaS Services, the Tyler Software, and anything developed by us under this Agreement. You do not acquire under this Agreement any license to use the Tyler Software in excess of the scope and/or duration of the SaaS Services.

   3.2 The Documentation is licensed to you and may be used and copied by your employees for internal, non-commercial reference purposes only.

   3.3 You retain all ownership and intellectual property rights to the Data. You expressly recognize that except to the extent necessary to carry out our obligations contained in this Agreement, we do not create or endorse any Data used in connection with the SaaS Services.

4. Restrictions. You may not: (a) make the Tyler Software or Documentation resulting from the SaaS Services available in any manner to any third party for use in the third party's business operations; (b) modify, make derivative works of, disassemble, reverse compile, or reverse engineer any part of the SaaS Services; (c) access or use the SaaS Services in order to build or support, and/or assist a third party in building or supporting, products or services competitive to us; or (d) license, sell, rent, lease, transfer, assign, distribute, display, host, outsource, disclose, permit timesharing or service bureau use, or otherwise commercially exploit or make the SaaS Services, Tyler Software, or Documentation available to any third party other than as expressly permitted by this Agreement.

5. Software Warranty. We warrant that the Tyler Software will perform without Defects during the

term of this Agreement. If the Tyler Software does not perform as warranted, we will use all reasonable efforts, consistent with industry standards, to cure the Defect in accordance with the maintenance and support process set forth in Section C(9), below, the SLA and our then current Support Call Process.

6. SaaS Services.

6.1 Our SaaS Services are audited at least yearly in accordance with the AICPA's Statement on Standards for Attestation Engagements ("SSAE") No. 18. We have attained, and will maintain, SOC 1 and SOC 2 compliance, or its equivalent, for so long as you are timely paying for SaaS Services. The scope of audit coverage varies for some Tyler Software solutions. Upon execution of a mutually agreeable Non-Disclosure Agreement ("NDA"), we will provide you with a summary of our compliance report(s) or its equivalent. Every year thereafter, for so long as the NDA is in effect and in which you make a written request, we will provide that same information. If our SaaS Services are provided using a 3rd party data center, we will provide available compliance reports for that data center.

6.2 You will be hosted on shared hardware in a Tyler data center or in a third-party data center. In either event, databases containing your Data will be dedicated to you and inaccessible to our other customers.

6.3 Our Tyler data centers have fully-redundant telecommunications access, electrical power, and the required hardware to provide access to the Tyler Software in the event of a disaster or component failure. In the event of a data center failure, we reserve the right to employ our disaster recovery plan for resumption of the SaaS Services. In that event, we commit to a Recovery Point Objective ("RPO") of 24 hours and a Recovery Time Objective ("RTO") of 24 hours. RPO represents the maximum duration of time between the most recent recoverable copy of your hosted Data and subsequent data center failure. RTO represents the maximum duration of time following data center failure within which your access to the Tyler Software must be restored.

6.4 We conduct annual penetration testing of either the production network and/or web application to be performed. We will maintain industry standard intrusion detection and prevention systems to monitor malicious activity in the network and to log and block any such activity. We will provide you with a written or electronic record of the actions taken by us in the event that any unauthorized access to your database(s) is detected as a result of our security protocols. We will undertake an additional security audit, on terms and timing to be mutually agreed to by the parties, at your written request. You may not attempt to bypass or subvert security restrictions in the SaaS Services or environments related to the Tyler Software. Unauthorized attempts to access files, passwords or other confidential information, and unauthorized vulnerability and penetration test scanning of our network and systems (hosted or otherwise) is prohibited without the prior written approval of our IT Security Officer.

6.5 We test our disaster recovery plan on an annual basis. Our standard test is not client-specific. Should you request a client-specific disaster recovery test, we will work with you to schedule and execute such a test on a mutually agreeable schedule. At your written request, we will provide test results to you within a commercially reasonable timeframe after receipt of the request.

6.6 We will be responsible for importing back-up and verifying that you can log-in. You will be responsible for running reports and testing critical processes to verify the returned Data.

6.7 We provide secure Data transmission paths between each of your workstations and our servers.

6.8 Tyler data centers are accessible only by authorized personnel with a unique key entry. All other visitors to Tyler data centers must be signed in and accompanied by authorized personnel. Entry attempts to the data center are regularly audited by internal staff and external auditors to ensure no unauthorized access.

6.9 Where applicable with respect to our applications that take or process card payment data, we are responsible for the security of cardholder data that we possess, including functions relating to storing, processing, and transmitting of the cardholder data and affirm that, as of the Effective Date, we comply with applicable requirements to be considered PCI DSS compliant and have performed the necessary steps to validate compliance with the PCI DSS. We agree to supply the current status of our PCI DSS compliance program in the form of an official Attestation of Compliance, which can be found at https://www.tylertech.com/about-us/compliance, and in the event of any change in our status, will comply with applicable notice requirements.

SECTION C – PROFESSIONAL SERVICES

1. Professional Services. We will provide you the various implementation-related services itemized in the Investment Summary and described in the Statement of Work.

2. Professional Services Fees. You agree to pay us the professional services fees in the amounts set forth in the Investment Summary. Those amounts are payable in accordance with our Invoicing and Payment Policy. You acknowledge that the fees stated in the Investment Summary are good-faith estimates of the amount of time and materials required for your implementation. We will bill you the actual fees incurred based on the in-scope services provided to you. Any discrepancies in the total values set forth in the Investment Summary will be resolved by multiplying the applicable hourly rate by the quoted hours.

3. Additional Services. The Investment Summary contains, and the Statement of Work describes, the scope of services and related costs (including programming and/or interface estimates) required for the project based on our understanding of the specifications you supplied. If additional work is required, or if you use or request additional services, we will provide you with an addendum or change order, as applicable, outlining the costs for the additional work. The price quotes in the addendum or change order will be valid for thirty (30) days from the date of the quote.

4. Cancellation. If travel is required, we will make all reasonable efforts to schedule travel for our personnel, including arranging travel reservations, at least two (2) weeks in advance of commitments. Therefore, if you cancel services less than two (2) weeks in advance (other than for Force Majeure or breach by us), you will be liable for all (a) non-refundable expenses incurred by us on your behalf, and (b) daily fees associated with cancelled professional services if we are unable to reassign our personnel. We will make all reasonable efforts to reassign personnel in the event you cancel within two (2) weeks of scheduled commitments.

5. Services Warranty. We will perform the services in a professional, workmanlike manner, consistent with industry standards. In the event we provide services that do not conform to this warranty, we will re-perform such services at no additional cost to you.

6. Site Access and Requirements. At no cost to us, you agree to provide us with full and free access to your personnel, facilities, and equipment as may be reasonably necessary for us to provide implementation services, subject to any reasonable security protocols or other written policies provided to us as of the Effective Date, and thereafter as mutually agreed to by you and us.

7. Background Checks. For at least the past twelve (12) years, all of our employees have undergone criminal background checks prior to hire. All employees sign our confidentiality agreement and security policies.

8. Client Assistance. You acknowledge that the implementation of the Tyler Software is a cooperative process requiring the time and resources of your personnel. You agree to use all reasonable efforts to cooperate with and assist us as may be reasonably required to meet the agreed upon project deadlines and other milestones for implementation. This cooperation includes at least working with us to schedule the implementation-related services outlined in this Agreement. We will not be liable for failure to meet any deadlines and milestones when such failure is due to Force Majeure or to the failure by your personnel to provide such cooperation and assistance (either through action or omission).

9. Maintenance and Support. For so long as you timely pay your SaaS Fees according to the Invoicing and Payment Policy, then in addition to the terms set forth in the SLA and the Support Call Process, we will:

   9.1 perform our maintenance and support obligations in a professional, good, and workmanlike manner, consistent with industry standards, to resolve Defects in the Tyler Software (subject to any applicable release life cycle policy);

   9.2 provide support during our established support hours;

   9.3 maintain personnel that are sufficiently trained to be familiar with the Tyler Software and Third Party Software, if any, in order to provide maintenance and support services;

   9.4 make available to you all releases to the Tyler Software (including updates and enhancements) that we make generally available without additional charge to customers who have a maintenance and support agreement in effect; and

   9.5 provide non-Defect resolution support of prior releases of the Tyler Software in accordance with any applicable release life cycle policy.

We will use all reasonable efforts to perform support services remotely. Currently, we use a third-party secure unattended connectivity tool called Bomgar, as well as GotoAssist by Citrix. Therefore, you agree to maintain a high-speed internet connection capable of connecting us to your PCs and server(s). You agree to provide us with a login account and local administrative privileges as we may reasonably require to perform remote services. We will, at our option, use the secure connection to assist with

proper diagnosis and resolution, subject to any reasonably applicable security protocols. If we cannot resolve a support issue remotely, we may be required to provide onsite services. In such event, we will be responsible for our travel expenses, unless it is determined that the reason onsite support was required was a reason outside our control. Either way, you agree to provide us with full and free access to the Tyler Software, working space, adequate facilities within a reasonable distance from the equipment, and use of machines, attachments, features, or other equipment reasonably necessary for us to provide the maintenance and support services, all at no charge to us. We strongly recommend that you also maintain your VPN for backup connectivity purposes.

For the avoidance of doubt, SaaS Fees do not include the following services: (a) onsite support (unless Tyler cannot remotely correct a Defect in the Tyler Software, as set forth above); (b) application design; (c) other consulting services; or (d) support outside our normal business hours as listed in our then-current Support Call Process. Requested services such as those outlined in this section will be billed to you on a time and materials basis at our then current rates. You must request those services with at least one (1) weeks' advance notice.

SECTION D – THIRD PARTY PRODUCTS

1. Third Party Hardware. We will sell, deliver, and install onsite the Third Party Hardware, if you have purchased any, for the price set forth in the Investment Summary. Those amounts are payable in accordance with our Invoicing and Payment Policy.

2. Third Party Software. As part of the SaaS Services, you will receive access to the Third Party Software and related documentation for internal business purposes only. Your rights to the Third Party Software will be governed by the Third Party Terms.

3. Third Party Products Warranties.

   3.1 We are authorized by each Developer to grant access to the Third Party Software.

   3.2 The Third Party Hardware will be new and unused, and upon payment in full, you will receive free and clear title to the Third Party Hardware.

   3.3 You acknowledge that we are not the manufacturer of the Third Party Products. We do not warrant or guarantee the performance of the Third Party Products. However, we grant and pass through to you any warranty that we may receive from the Developer or supplier of the Third Party Products.

4. Third Party Services. If you have purchased Third Party Services, those services will be provided independent of Tyler by such third-party at the rates set forth in the Investment Summary and in accordance with our Invoicing and Payment Policy.

SECTION E - INVOICING AND PAYMENT; INVOICE DISPUTES

1. Invoicing and Payment. We will invoice you the SaaS Fees and fees for other professional services in the Investment Summary per our Invoicing and Payment Policy, subject to Section E(2).

2. Invoice Disputes. If you believe any delivered software or service does not conform to the

warranties in this Agreement, you will provide us with written notice within thirty (30) days of your receipt of the applicable invoice. The written notice must contain reasonable detail of the issues you contend are in dispute so that we can confirm the issue and respond to your notice with either a justification of the invoice, an adjustment to the invoice, or a proposal addressing the issues presented in your notice. We will work with you as may be necessary to develop an action plan that outlines reasonable steps to be taken by each of us to resolve any issues presented in your notice. You may withhold payment of the amount(s) actually in dispute, and only those amounts, until we complete the action items outlined in the plan. If we are unable to complete the action items outlined in the action plan because of your failure to complete the items agreed to be done by you, then you will remit full payment of the invoice. We reserve the right to suspend delivery of all SaaS Services, including maintenance and support services, if you fail to pay an invoice not disputed as described above within fifteen (15) days of notice of our intent to do so.

SECTION F – TERM AND TERMINATION

1. Term. The initial term of this Agreement is equal to the number of years indicated for SaaS Services in Exhibit A, commencing on the first day of the first month following the availability of the SaaS environment, unless earlier terminated as set forth below. If no duration is indicated in Exhibit A, the initial term is one (1) year. Upon expiration of the initial term, this Agreement will renew automatically for additional one (1) year renewal terms at our then-current SaaS Fees unless terminated in writing by either party at least sixty (60) days prior to the end of the then-current renewal term. Your right to access or use the Tyler Software and the SaaS Services will terminate at the end of this Agreement.

2. Termination. This Agreement may be terminated as set forth below. In the event of termination, you will pay us for all undisputed fees and expenses related to the software, products, and/or services you have received, or we have incurred or delivered, prior to the effective date of termination. Disputed fees and expenses in all terminations other than your termination for cause must have been submitted as invoice disputes in accordance with Section E(2).

   2.1 Failure to Pay SaaS Fees. You acknowledge that continued access to the SaaS Services is contingent upon your timely payment of SaaS Fees. If you fail to timely pay the SaaS Fees, we may discontinue the SaaS Services and deny your access to the Tyler Software. We may also terminate this Agreement if you don't cure such failure to pay within forty-five (45) days of receiving written notice of our intent to terminate.

   2.2 For Cause. If you believe we have materially breached this Agreement, you will invoke the Dispute Resolution clause set forth in Section H(3). You may terminate this Agreement for cause in the event we do not cure, or create a mutually agreeable action plan to address, a material breach of this Agreement within the thirty (30) day window set forth in Section H(3).

   2.3 Force Majeure. Either party has the right to terminate this Agreement if a Force Majeure event suspends performance of the SaaS Services for a period of forty-five (45) days or more.

   2.4 Lack of Appropriations. If you should not appropriate or otherwise make available funds sufficient to utilize the SaaS Services, you may unilaterally terminate this Agreement upon thirty (30) days written notice to us. You will not be entitled to a refund or offset of previously paid, but unused SaaS Fees. You agree not to use termination for lack of appropriations as a

substitute for termination for convenience.

SECTION G – INDEMNIFICATION, LIMITATION OF LIABILITY AND INSURANCE

1. Intellectual Property Infringement Indemnification.

1.1 We will defend you against any third party claim(s) that the Tyler Software or Documentation infringes that third party's patent, copyright, or trademark, or misappropriates its trade secrets, and will pay the amount of any resulting adverse final judgment (or settlement to which we consent). You must notify us promptly in writing of the claim and give us sole control over its defense or settlement. You agree to provide us with reasonable assistance, cooperation, and information in defending the claim at our expense.

1.2 Our obligations under this Section G(1) will not apply to the extent the claim or adverse final judgment is based on your use of the Tyler Software in contradiction of this Agreement, including with non-licensed third parties, or your willful infringement.

1.3 If we receive information concerning an infringement or misappropriation claim related to the Tyler Software, we may, at our expense and without obligation to do so, either: (a) procure for you the right to continue its use; (b) modify it to make it non-infringing; or (c) replace it with a functional equivalent, in which case you will stop running the allegedly infringing Tyler Software immediately. Alternatively, we may decide to litigate the claim to judgment, in which case you may continue to use the Tyler Software consistent with the terms of this Agreement.

1.4 If an infringement or misappropriation claim is fully litigated and your use of the Tyler Software is enjoined by a court of competent jurisdiction, in addition to paying any adverse final judgment (or settlement to which we consent), we will, at our option, either: (a) procure the right to continue its use; (b) modify it to make it non-infringing; or (c) replace it with a functional equivalent. This section provides your exclusive remedy for third party copyright, patent, or trademark infringement and trade secret misappropriation claims.

2. General Indemnification.

2.1 We will indemnify and hold harmless you and your agents, officials, and employees from and against any and all third-party claims, losses, liabilities, damages, costs, and expenses (including reasonable attorney's fees and costs) for (a) personal injury or property damage to the extent caused by our negligence or willful misconduct; or (b) our violation of PCI-DSS requirements or a law applicable to our performance under this Agreement. You must notify us promptly in writing of the claim and give us sole control over its defense or settlement. You agree to provide us with reasonable assistance, cooperation, and information in defending the claim at our expense.

2.2 To the extent permitted by applicable law, you will indemnify and hold harmless us and our agents, officials, and employees from and against any and all third-party claims, losses, liabilities, damages, costs, and expenses (including reasonable attorney's fees and costs) for personal injury or property damage to the extent caused by your negligence or willful misconduct; or (b) your violation of a law applicable to your performance under this Agreement. We will notify you promptly in writing of the claim and will give you sole control over its defense

or settlement. We agree to provide you with reasonable assistance, cooperation, and information in defending the claim at your expense.

3. **DISCLAIMER. EXCEPT FOR THE EXPRESS WARRANTIES PROVIDED IN THIS AGREEMENT AND TO THE MAXIMUM EXTENT PERMITTED BY APPLICABLE LAW, WE HEREBY DISCLAIM ALL OTHER WARRANTIES AND CONDITIONS, WHETHER EXPRESS, IMPLIED, OR STATUTORY, INCLUDING, BUT NOT LIMITED TO, ANY IMPLIED WARRANTIES, DUTIES, OR CONDITIONS OF MERCHANTABILITY OR FITNESS FOR A PARTICULAR PURPOSE.**

4. **LIMITATION OF LIABILITY. EXCEPT AS OTHERWISE EXPRESSLY SET FORTH IN THIS AGREEMENT, OUR LIABILITY FOR DAMAGES ARISING OUT OF THIS AGREEMENT, WHETHER BASED ON A THEORY OF CONTRACT OR TORT, INCLUDING NEGLIGENCE AND STRICT LIABILITY, SHALL BE LIMITED TO YOUR ACTUAL DIRECT DAMAGES, NOT TO EXCEED (A) DURING THE INITIAL TERM, AS SET FORTH IN SECTION F(1), TOTAL FEES PAID AS OF THE TIME OF THE CLAIM; OR (B) DURING ANY RENEWAL TERM, THE THEN-CURRENT ANNUAL SAAS FEES PAYABLE IN THAT RENEWAL TERM. THE PARTIES ACKNOWLEDGE AND AGREE THAT THE PRICES SET FORTH IN THIS AGREEMENT ARE SET IN RELIANCE UPON THIS LIMITATION OF LIABILITY AND TO THE MAXIMUM EXTENT ALLOWED UNDER APPLICABLE LAW, THE EXCLUSION OF CERTAIN DAMAGES, AND EACH SHALL APPLY REGARDLESS OF THE FAILURE OF AN ESSENTIAL PURPOSE OF ANY REMEDY. THE FOREGOING LIMITATION OF LIABILITY SHALL NOT APPLY TO CLAIMS THAT ARE SUBJECT TO SECTIONS G(1) AND G(2).**

5. **EXCLUSION OF CERTAIN DAMAGES. TO THE MAXIMUM EXTENT PERMITTED BY APPLICABLE LAW, IN NO EVENT SHALL WE BE LIABLE FOR ANY SPECIAL, INCIDENTAL, PUNITIVE, INDIRECT, OR CONSEQUENTIAL DAMAGES WHATSOEVER, EVEN IF WE HAVE BEEN ADVISED OF THE POSSIBILITY OF SUCH DAMAGES.**

6. Insurance. During the course of performing services under this Agreement, we agree to maintain the following levels of insurance: (a) Commercial General Liability of at least $1,000,000; (b) Automobile Liability of at least $1,000,000; (c) Professional Liability of at least $1,000,000; (d) Workers Compensation complying with applicable statutory requirements; and (e) Excess/Umbrella Liability of at least $5,000,000. We will add you as an additional insured to our Commercial General Liability and Automobile Liability policies, which will automatically add you as an additional insured to our Excess/Umbrella Liability policy as well. We will provide you with copies of certificates of insurance upon your written request.

SECTION H – GENERAL TERMS AND CONDITIONS

1. Additional Products and Services. You may purchase additional products and services at the rates set forth in the Investment Summary for twelve (12) months from the Effective Date by executing a mutually agreed addendum. If no rate is provided in the Investment Summary, or those twelve (12) months have expired, you may purchase additional products and services at our then-current list price, also by executing a mutually agreed addendum. The terms of this Agreement will control any such additional purchase(s), unless otherwise specifically provided in the addendum.

2. Optional Items. Pricing for any listed optional products and services in the Investment Summary will be valid for twelve (12) months from the Effective Date.

3. Dispute Resolution. You agree to provide us with written notice within thirty (30) days of becoming

aware of a dispute. You agree to cooperate with us in trying to reasonably resolve all disputes, including, if requested by either party, appointing a senior representative to meet and engage in good faith negotiations with our appointed senior representative. Senior representatives will convene within thirty (30) days of the written dispute notice, unless otherwise agreed. All meetings and discussions between senior representatives will be deemed confidential settlement discussions not subject to disclosure under Federal Rule of Evidence 408 or any similar applicable state rule. If we fail to resolve the dispute, then the parties shall participate in non-binding mediation in an effort to resolve the dispute. If the dispute remains unresolved after mediation, then either of us may assert our respective rights and remedies in a court of competent jurisdiction. Nothing in this section shall prevent you or us from seeking necessary injunctive relief during the dispute resolution procedures.

4. Taxes. The fees in the Investment Summary do not include any taxes, including, without limitation, sales, use, or excise tax. If you are a tax-exempt entity, you agree to provide us with a tax-exempt certificate. Otherwise, we will pay all applicable taxes to the proper authorities and you will reimburse us for such taxes. If you have a valid direct-pay permit, you agree to provide us with a copy. For clarity, we are responsible for paying our income taxes, both federal and state, as applicable, arising from our performance of this Agreement.

5. Nondiscrimination. We will not discriminate against any person employed or applying for employment concerning the performance of our responsibilities under this Agreement. This discrimination prohibition will apply to all matters of initial employment, tenure, and terms of employment, or otherwise with respect to any matter directly or indirectly relating to employment concerning race, color, religion, national origin, age, sex, sexual orientation, ancestry, disability that is unrelated to the individual's ability to perform the duties of a particular job or position, height, weight, marital status, or political affiliation. We will post, where appropriate, all notices related to nondiscrimination as may be required by applicable law.

6. E-Verify. We have complied, and will comply, with the E-Verify procedures administered by the U.S. Citizenship and Immigration Services Verification Division for all of our employees assigned to your project.

7. Subcontractors. We will not subcontract any services under this Agreement without your prior written consent, not to be unreasonably withheld.

8. Binding Effect; No Assignment. This Agreement shall be binding on, and shall be for the benefit of, either your or our successor(s) or permitted assign(s). Neither party may assign this Agreement without the prior written consent of the other party; provided, however, your consent is not required for an assignment by us as a result of a corporate reorganization, merger, acquisition, or purchase of substantially all of our assets.

9. Force Majeure. Except for your payment obligations, neither party will be liable for delays in performing its obligations under this Agreement to the extent that the delay is caused by Force Majeure; provided, however, that within ten (10) business days of the Force Majeure event, the party whose performance is delayed provides the other party with written notice explaining the cause and extent thereof, as well as a request for a reasonable time extension equal to the estimated duration of the Force Majeure event.

10. No Intended Third Party Beneficiaries. This Agreement is entered into solely for the benefit of you and us. No third party will be deemed a beneficiary of this Agreement, and no third party will have the right to make any claim or assert any right under this Agreement. This provision does not affect the rights of third parties under any Third Party Terms.

11. Entire Agreement; Amendment. This Agreement represents the entire agreement between you and us with respect to the subject matter hereof, and supersedes any prior agreements, understandings, and representations, whether written, oral, expressed, implied, or statutory. Purchase orders submitted by you, if any, are for your internal administrative purposes only, and the terms and conditions contained in those purchase orders will have no force or effect. This Agreement may only be modified by a written amendment signed by an authorized representative of each party.

12. Severability. If any term or provision of this Agreement is held invalid or unenforceable, the remainder of this Agreement will be considered valid and enforceable to the fullest extent permitted by law.

13. No Waiver. In the event that the terms and conditions of this Agreement are not strictly enforced by either party, such non-enforcement will not act as or be deemed to act as a waiver or modification of this Agreement, nor will such non-enforcement prevent such party from enforcing each and every term of this Agreement thereafter.

14. Independent Contractor. We are an independent contractor for all purposes under this Agreement.

15. Notices. All notices or communications required or permitted as a part of this Agreement, such as notice of an alleged material breach for a termination for cause or a dispute that must be submitted to dispute resolution, must be in writing and will be deemed delivered upon the earlier of the following: (a) actual receipt by the receiving party; (b) upon receipt by sender of a certified mail, return receipt signed by an employee or agent of the receiving party; (c) upon receipt by sender of proof of email delivery; or (d) if not actually received, five (5) days after deposit with the United States Postal Service authorized mail center with proper postage (certified mail, return receipt requested) affixed and addressed to the other party at the address set forth on the signature page hereto or such other address as the party may have designated by proper notice. The consequences for the failure to receive a notice due to improper notification by the intended receiving party of a change in address will be borne by the intended receiving party.

16. Client Lists. You agree that we may identify you by name in client lists, marketing presentations, and promotional materials.

17. Confidentiality. Both parties recognize that their respective employees and agents, in the course of performance of this Agreement, may be exposed to confidential information and that disclosure of such information could violate rights to private individuals and entities, including the parties. Confidential information is nonpublic information that a reasonable person would believe to be confidential and includes, without limitation, personal identifying information (*e.g.*, social security numbers) and trade secrets, each as defined by applicable state law. Each party agrees that it will not disclose any confidential information of the other party and further agrees to take all reasonable and appropriate action to prevent such disclosure by its employees or agents. The confidentiality covenants contained herein will survive the termination or cancellation of this Agreement. This obligation of confidentiality will not apply to information that:

(a) is in the public domain, either at the time of disclosure or afterwards, except by breach of this Agreement by a party or its employees or agents;
(b) a party can establish by reasonable proof was in that party's possession at the time of initial disclosure;
(c) a party receives from a third party who has a right to disclose it to the receiving party; or
(d) is the subject of a legitimate disclosure request under the open records laws or similar applicable public disclosure laws governing this Agreement; provided, however, that in the event you receive an open records or other similar applicable request, you will give us prompt notice and otherwise perform the functions required by applicable law.

18. Quarantining of Client Data. Some services provided by Tyler require us to be in possession of your Data. In the event we detect malware or other conditions associated with your Data that are reasonably suspected of putting Tyler resources or other Tyler clients' data at risk, we reserve the absolute right to move your Data from its location within a multi-tenancy Tyler hosted environment to an isolated "quarantined" environment without advance notice. Your Data will remain in such quarantine for a period of at least six (6) months during which time we will review the Data, and all traffic associated with the Data, for signs of malware or other similar issues. If no issues are detected through such reviews during the six (6) month period of quarantine, we will coordinate with you the restoration of your Data to a non-quarantined environment. In the event your Data must remain in quarantine beyond this six (6) month period through no fault of Tyler's, we reserve the right to require payment of additional fees for the extended duration of quarantine. We will provide an estimate of what those costs will be upon your request.

19. Business License. In the event a local business license is required for us to perform services hereunder, you will promptly notify us and provide us with the necessary paperwork and/or contact information so that we may timely obtain such license.

20. Governing Law. This Agreement will be governed by and construed in accordance with the laws of your state of domicile, without regard to its rules on conflicts of law.

21. Multiple Originals and Authorized Signatures. This Agreement may be executed in multiple originals, any of which will be independently treated as an original document. Any electronic, faxed, scanned, photocopied, or similarly reproduced signature on this Agreement or any amendment hereto will be deemed an original signature and will be fully enforceable as if an original signature. Each party represents to the other that the signatory set forth below is duly authorized to bind that party to this Agreement.

22. Cooperative Procurement. To the maximum extent permitted by applicable law, we agree that this Agreement may be used as a cooperative procurement vehicle by eligible jurisdictions. We reserve the right to negotiate and customize the terms and conditions set forth herein, including but not limited to pricing, to the scope and circumstances of that cooperative procurement.

23. Contract Documents. This Agreement includes the following exhibits:

Exhibit A	Investment Summary
Exhibit B	Invoicing and Payment Policy
	Schedule 1: Business Travel Policy
Exhibit C	Service Level Agreement
	Schedule 1: Support Call Process

Exhibit D	Third Party Terms
	Schedule 1: Hyperlinked Terms
	Schedule 2: DocOrigin Terms
	Schedule 3: Koa Hills Terms
	Schedule 4: BMI Terms
Exhibit E	Statement of Work

IN WITNESS WHEREOF, a duly authorized representative of each party has executed this Agreement as of the date(s) set forth below.

Tyler Technologies, Inc.	City of Opa-Locka, Florida
By:_____	By:_____
Name:_____	Name:_____
Title:_____	Title:_____
Date:_____	Date:_____
Address for Notices: Tyler Technologies, Inc. One Tyler Drive Yarmouth, ME 04096 Attention: Chief Legal Officer	Address for Notices: City of Opa-Locka 3400 NW 135th Street Opa Locka, FL 33054-4708 Attention: _____

Exhibit A
Investment Summary

The following Investment Summary details the software and services to be delivered by us to you under the Agreement. This Investment Summary is effective as of the Effective Date. Capitalized terms not otherwise defined will have the meaning assigned to such terms in the Agreement.

Tyler sales quotation to be inserted prior to Agreement execution.

REMAINDER OF PAGE INTENTIONALLY LEFT BLANK

Exhibit B
Invoicing and Payment Policy

We will provide you with the software and services set forth in the Investment Summary of the Agreement. Capitalized terms not otherwise defined will have the meaning assigned to such terms in the Agreement.

Invoicing: We will invoice you for the applicable software and services in the Investment Summary as set forth below. Your rights to dispute any invoice are set forth in the Agreement.

1. SaaS Fees. SaaS Fees are invoiced on an annual basis, beginning on the commencement of the initial term as set forth in Section F (1) of this Agreement. Your annual SaaS fees for the initial term are set forth in the Investment Summary. Upon expiration of the initial term, your annual SaaS fees will be at our then-current rates.

2. Other Tyler Software and Services.

   2.1 *VPN Device*: The fee for the VPN device will be invoiced upon installation of the VPN.
   2.2 *Implementation and Other Professional Services (including training)*: Implementation and other professional services (including training) are billed and invoiced as delivered, at the rates set forth in the Investment Summary.
   2.3 *Consulting Services*: If you have purchased any Business Process Consulting services, if they have been quoted as fixed-fee services, they will be invoiced 50% upon your acceptance of the Best Practice Recommendations, by module, and 50% upon your acceptance of custom desktop procedures, by module. If you have purchased any Business Process Consulting services and they are quoted as an estimate, then we will bill you the actual services delivered on a time and materials basis.
   2.4 *Conversions*: Fixed-fee conversions are invoiced 50% upon initial delivery of the converted Data, by conversion option, and 50% upon Client acceptance to load the converted Data into Live/Production environment, by conversion option. Where conversions are quoted as estimated, we will bill you the actual services delivered on a time and materials basis.
   2.5 *Requested Modifications to the Tyler Software*: Requested modifications to the Tyler Software are invoiced 50% upon delivery of specifications and 50% upon delivery of the applicable modification. You must report any failure of the modification to conform to the specifications within thirty (30) days of delivery; otherwise, the modification will be deemed to be in compliance with the specifications after the 30-day window has passed. You may still report Defects to us as set forth in this Agreement.
   2.6 *Other Fixed Price Services*: Other fixed price services are invoiced as delivered, at the rates set forth in the Investment Summary. For the avoidance of doubt, where "Project Planning Services" are provided, payment will be due upon delivery of the Implementation Planning document.
   2.7 *Annual Services*: Unless otherwise indicated in this Exhibit B, fees for annual services are due

annually, in advance, commencing on the availability of the service. Your annual fees for the initial term are set forth in the Investment Summary. Upon expiration of the initial term, your annual fees will be at our then-current rates.

3. Third Party Products.

   3.1 *Third Party Software License Fees*: License fees for Third Party Software, if any, are invoiced when we make it available to you for downloading.
   3.2 *Third Party Software Maintenance*: The first year maintenance for the Third Party Software is invoiced when we make it available to you for downloading.
   3.3 *Third Party Hardware*: Third Party Hardware costs, if any, are invoiced upon delivery.
   3.4 *Third Party Services:* Fees for Third Party Services, if any, are invoiced as delivered, along with applicable expenses, at the rates set forth in the Investment Summary. The foregoing notwithstanding, Koa Hills Professional Services will be invoiced 50% upon commencement of the services and 50% upon completion of the services.
   3.5 *Third Party SaaS:* Third Party SaaS Services fees, if any, are invoiced annually, in advance, commencing with availability of the respective Third Party SaaS Services. Pricing for the first year of Third Party SaaS Services are indicated in the Investment Summary. Pricing for subsequent years will be at the respective third party's then-current rates.

4. Transaction Fees. Unless paid directly by an end user at the time of transaction, per transaction (call, message, etc.) fees are invoiced on a quarterly basis. Fees are indicated in Schedule A and may be increased by Tyler upon notice of no less than thirty (30) days.

5. Expenses. The service rates in the Investment Summary do not include travel expenses. Expenses for Tyler delivered services will be billed as incurred and only in accordance with our then-current Business Travel Policy, plus a 10% travel agency processing fee. Our current Business Travel Policy is attached to this Exhibit B as Schedule 1. Copies of receipts will be provided upon request; we reserve the right to charge you an administrative fee depending on the extent of your requests. Receipts for miscellaneous items less than twenty-five dollars and mileage logs are not available.

Payment. Payment for undisputed invoices is due within forty-five (45) days of the invoice date. We prefer to receive payments electronically. Our electronic payment information is available by contacting AR@tylertech.com.

Exhibit B
Schedule 1
Business Travel Policy

1. Air Travel

   A. Reservations & Tickets

   The Travel Management Company (TMC) used by Tyler will provide an employee with a direct flight within two hours before or after the requested departure time, assuming that flight does not add more than three hours to the employee's total trip duration and the fare is within $100 (each way) of the lowest logical fare. If a net savings of $200 or more (each way) is possible through a connecting flight that is within two hours before or after the requested departure time and that does not add more than three hours to the employee's total trip duration, the connecting flight should be accepted.

   Employees are encouraged to make advanced reservations to take full advantage of discount opportunities. Employees should use all reasonable efforts to make travel arrangements at least two (2) weeks in advance of commitments. A seven (7) day advance booking requirement is mandatory. When booking less than seven (7) days in advance, management approval will be required.

   Except in the case of international travel where a segment of continuous air travel is six (6) or more consecutive hours in length, only economy or coach class seating is reimbursable. Employees shall not be reimbursed for "Basic Economy Fares" because these fares are non-refundable and have many restrictions that outweigh the cost-savings.

   B. Baggage Fees

   Reimbursement of personal baggage charges are based on trip duration as follows:

   - Up to five (5) days = one (1) checked bag
   - Six (6) or more days = two (2) checked bags

   Baggage fees for sports equipment are not reimbursable.

2. Ground Transportation

A. Private Automobile

Mileage Allowance – Business use of an employee's private automobile will be reimbursed at the current IRS allowable rate, plus out of pocket costs for tolls and parking. Mileage will be calculated by using the employee's office as the starting and ending point, in compliance with IRS regulations. Employees who have been designated a home office should calculate miles from their home.

B. Rental Car

Employees are authorized to rent cars only in conjunction with air travel when cost, convenience, and the specific situation reasonably require their use. When renting a car for Tyler business, employees should select a "mid-size" or "intermediate" car. "Full" size cars may be rented when three or more employees are traveling together. Tyler carries leased vehicle coverage for business car rentals; except for employees traveling to Alaska and internationally (excluding Canada), additional insurance on the rental agreement should be declined.

C. Public Transportation

Taxi or airport limousine services may be considered when traveling in and around cities or to and from airports when less expensive means of transportation are unavailable or impractical. The actual fare plus a reasonable tip (15-18%) are reimbursable. In the case of a free hotel shuttle to the airport, tips are included in the per diem rates and will not be reimbursed separately.

D. Parking & Tolls

When parking at the airport, employees must use longer term parking areas that are measured in days as opposed to hours. Park and fly options located near some airports may also be used. For extended trips that would result in excessive parking charges, public transportation to/from the airport should be considered. Tolls will be reimbursed when receipts are presented.

3. Lodging

Tyler's TMC will select hotel chains that are well established, reasonable in price, and conveniently located in relation to the traveler's work assignment. Typical hotel chains include Courtyard, Fairfield Inn, Hampton Inn, and Holiday Inn Express. If the employee has a discount rate with a local hotel, the hotel reservation should note that discount and the employee should confirm the lower rate with the hotel upon arrival. Employee memberships in travel clubs such as AAA should be noted in their travel profiles so that the employee can take advantage of any lower club rates.

"No shows" or cancellation fees are not reimbursable if the employee does not comply with the hotel's cancellation policy.

Tips for maids and other hotel staff are included in the per diem rate and are not reimbursed separately.

Employees are not authorized to reserve non-traditional short-term lodging, such as Airbnb, VRBO, and HomeAway. Employees who elect to make such reservations shall not be reimbursed.

4. Meals and Incidental Expenses

Employee meals and incidental expenses while on travel status within the continental U.S. are in accordance with the federal per diem rates published by the General Services Administration. Incidental expenses include tips to maids, hotel staff, and shuttle drivers and other minor travel expenses. Per diem rates are available at www.gsa.gov/perdiem.

Per diem for Alaska, Hawaii, U.S. protectorates and international destinations are provided separately by the Department of State and will be determined as required.

A. Overnight Travel

For each full day of travel, all three meals are reimbursable. Per diems on the first and last day of a trip are governed as set forth below.

Departure Day

Depart before 12:00 noon	Lunch and dinner
Depart after 12:00 noon	Dinner

Return Day

Return before 12:00 noon	Breakfast
Return between 12:00 noon & 7:00 p.m.	Breakfast and lunch
Return after 7:00 p.m.*	Breakfast, lunch and dinner

*7:00 p.m. is defined as direct travel time and does not include time taken to stop for dinner.

The reimbursement rates for individual meals are calculated as a percentage of the full day per diem as follows:

Breakfast	15%
Lunch	25%
Dinner	60%

B. Same Day Travel

Employees traveling at least 100 miles to a site and returning in the same day are eligible to claim lunch on an expense report. Employees on same day travel status are eligible to claim dinner in the event they return home after 7:00 p.m.*

*7:00 p.m. is defined as direct travel time and does not include time taken to stop for dinner.

5. Internet Access – Hotels and Airports

Employees who travel may need to access their e-mail at night. Many hotels provide free high speed internet access and Tyler employees are encouraged to use such hotels whenever possible. If an employee's hotel charges for internet access it is reimbursable up to $10.00 per day. Charges for internet access at airports are not reimbursable.

6. International Travel

All international flights with the exception of flights between the U.S. and Canada should be reserved through TMC using the "lowest practical coach fare" with the exception of flights that are six (6) or more consecutive hours in length. In such event, the next available seating class above coach shall be reimbursed.

When required to travel internationally for business, employees shall be reimbursed for photo fees, application fees, and execution fees when obtaining a new passport book, but fees related to passport renewals are not reimbursable. Visa application and legal fees, entry taxes and departure taxes are reimbursable.

The cost of vaccinations that are either required for travel to specific countries or suggested by the U.S. Department of Health & Human Services for travel to specific countries, is reimbursable.

Section 4, Meals & Incidental Expenses, and Section 2.b., Rental Car, shall apply to this section.

Exhibit C
Service Level Agreement

I. Agreement Overview

This SLA operates in conjunction with, and does not supersede or replace any part of, the Agreement. It outlines the information technology service levels that we will provide to you to ensure the availability of the application services that you have requested us to provide. This SLA does not apply to any Third Party SaaS Services. All other support services are documented in the Support Call Process.

II. Definitions. Except as defined below, all defined terms have the meaning set forth in the Agreement.

Actual Attainment: The percentage of time the Tyler Software is available during a calendar quarter, calculated as follows: (Service Availability – Downtime) ÷ Service Availability.

Client Error Incident: Any service unavailability resulting from your applications, content or equipment, or the acts or omissions of any of your service users or third-party providers over whom we exercise no control.

Downtime: Those minutes during Service Availability, as defined below, when all users cannot launch, login, search or save primary data in the Tyler Software. Downtime does not include those instances in which only a Defect is present.

Emergency Maintenance: (1) maintenance that is required to patch a critical security vulnerability; (2) maintenance that is required to prevent an imminent outage of Service Availability; or (3) maintenance that is mutually agreed upon in writing by Tyler and the Client.

Planned Downtime: Downtime that occurs during a Standard or Emergency Maintenance window.

Service Availability: The total number of minutes in a calendar quarter that the Tyler Software is capable of receiving, processing, and responding to requests, excluding Planned Downtime, Client Error Incidents, denial of service attacks and Force Majeure.

Standard Maintenance: Routine maintenance to the Tyler Software and infrastructure. Standard Maintenance is limited to five (5) hours per week.

III. Service Availability

a. Your Responsibilities

Whenever you experience Downtime, you must make a support call according to the procedures outlined in the Support Call Process. You will receive a support case number.

b. Our Responsibilities

When our support team receives a call from you that Downtime has occurred or is occurring, we will work with you to identify the cause of the Downtime (including whether it may be the result of Planned

Downtime, a Client Error Incident, Denial of Service attack or Force Majeure). We will also work with you to resume normal operations.

c. Client Relief

Our targeted Attainment Goal is 100%. You may be entitled to credits as indicated in the Client Relief Schedule found below. Your relief credit is calculated as a percentage of the SaaS fees paid for the calendar quarter.

In order to receive relief credits, you must submit a request through one of the channels listed in our Support Call Process within fifteen days (15) of the end of the applicable quarter. We will respond to your relief request within thirty (30) day(s) of receipt.

The total credits confirmed by us will be applied to the SaaS Fee for the next billing cycle. Issuing of such credit does not relieve us of our obligations under the Agreement to correct the problem which created the service interruption.

Client Relief Schedule	
Actual Attainment	**Client Relief**
99.99% - 99.50%	Remedial action will be taken
99.49% - 98.50%	2%
98.49% - 97.50%	4%
97.49% - 96.50%	6%
96.49% - 95.50%	8%
Below 95.50%	10%

* Notwithstanding language in the Agreement to the contrary, Recovery Point Objective is one (1) hour.

IV. Maintenance Notifications

We perform Standard Maintenance during limited windows that are historically known to be reliably low-traffic times. If and when maintenance is predicted to occur during periods of higher traffic, we will provide advance notice of those windows and will coordinate to the greatest extent possible with you.

Not all maintenance activities will cause application unavailability. However, if Tyler anticipates that activities during a Standard or Emergency Maintenance window may make the Tyler Software unavailable, we will provide advance notice, as reasonably practicable that the Tyler Software will be unavailable during the maintenance window.

Exhibit C
Schedule 1
Support Call Process

Support Channels

Tyler Technologies, Inc. provides the following channels of software support for authorized users*:

(1) On-line submission (portal) – for less urgent and functionality-based questions, users may create support incidents through the Tyler Customer Portal available at the Tyler Technologies website. A built-in Answer Panel provides users with resolutions to most "how-to" and configuration-based questions through a simplified search interface with machine learning, potentially eliminating the need to submit the support case.
(2) Email – for less urgent situations, users may submit emails directly to the software support group.
(3) Telephone – for urgent or complex questions, users receive toll-free, telephone software support.

** Channel availability may be limited for certain applications.*

Support Resources

A number of additional resources are available to provide a comprehensive and complete support experience:

(1) Tyler Website – www.tylertech.com – for accessing client tools, documentation, and other information including support contact information.
(2) Tyler Search -a knowledge based search engine that lets you search multiple sources simultaneously to find the answers you need, 24x7.
(3) Tyler Community –provides a venue for all Tyler clients with current maintenance agreements to collaborate with one another, share best practices and resources, and access documentation.
(4) Tyler University – online training courses on Tyler products.

Support Availability

Tyler Technologies support is available during the local business hours of 8 AM to 5 PM (Monday – Friday) across four US time zones (Pacific, Mountain, Central and Eastern). Tyler's holiday schedule is outlined below. There will be no support coverage on these days.

New Year's Day	Thanksgiving Day
Memorial Day	Day after Thanksgiving
Independence Day	Christmas Day
Labor Day	

For support teams that provide after-hours service, we will provide you with procedures for contacting support staff after normal business hours for reporting Priority Level 1 Defects only. Upon receipt of

such a Defect notification, we will use commercially reasonable efforts to meet the resolution targets set forth below.

We will also make commercially reasonable efforts to be available for one pre-scheduled Saturday of each month to assist your IT staff with applying patches and release upgrades, as well as consulting with them on server maintenance and configuration of the Tyler Software environment.

Incident Handling

Incident Tracking

Every support incident is logged into Tyler's Customer Relationship Management System and given a unique case number. This system tracks the history of each incident. The case number is used to track and reference open issues when clients contact support. Clients may track incidents, using the case number, through Tyler's Customer Portal or by calling software support directly.

Incident Priority

Each incident is assigned a priority level, which corresponds to the Client's needs. Tyler and the Client will reasonably set the priority of the incident per the chart below. This chart is not intended to address every type of support incident, and certain "characteristics" may or may not apply depending on whether the Tyler software has been deployed on customer infrastructure or the Tyler cloud. The goal is to help guide the Client towards clearly understanding and communicating the importance of the issue and to describe generally expected response and resolution targets in the production environment only.

References to a "confirmed support incident" mean that Tyler and the Client have successfully validated the reported Defect/support incident.

Priority Level	Characteristics of Support Incident	Resolution Targets*
1 Critical	Support incident that causes (a) complete application failure or application unavailability; (b) application failure or unavailability in one or more of the client's remote location; or (c) systemic loss of multiple essential system functions.	Tyler shall provide an initial response to Priority Level 1 incidents within one (1) business hour of receipt of the incident. Once the incident has been confirmed, Tyler shall use commercially reasonable efforts to resolve such support incidents or provide a circumvention procedure within one (1) business day. For non-hosted customers, Tyler's responsibility for lost or corrupted data is limited to assisting the Client in restoring its last available database.

Priority Level	Characteristics of Support Incident	Resolution Targets*
2 High	Support incident that causes (a) repeated, consistent failure of essential functionality affecting more than one user or (b) loss or corruption of data.	Tyler shall provide an initial response to Priority Level 2 incidents within four (4) business hours of receipt of the incident. Once the incident has been confirmed, Tyler shall use commercially reasonable efforts to resolve such support incidents or provide a circumvention procedure within ten (10) business days. For non-hosted customers, Tyler's responsibility for loss or corrupted data is limited to assisting the Client in restoring its last available database.
3 Medium	Priority Level 1 incident with an existing circumvention procedure, or a Priority Level 2 incident that affects only one user or for which there is an existing circumvention procedure.	Tyler shall provide an initial response to Priority Level 3 incidents within one (1) business day of receipt of the incident. Once the incident has been confirmed, Tyler shall use commercially reasonable efforts to resolve such support incidents without the need for a circumvention procedure with the next published maintenance update or service pack, which shall occur at least quarterly. For non-hosted customers, Tyler's responsibility for lost or corrupted data is limited to assisting the Client in restoring its last available database.
4 Non-critical	Support incident that causes failure of non-essential functionality or a cosmetic or other issue that does not qualify as any other Priority Level.	Tyler shall provide an initial response to Priority Level 4 incidents within two (2) business days of receipt of the incident. Once the incident has been confirmed, Tyler shall use commercially reasonable efforts to resolve such support incidents, as well as cosmetic issues, with a future version release.

**Response and Resolution Targets may differ by product or business need*

Incident Escalation

If Tyler is unable to resolve any priority level 1 or 2 defect as listed above or the priority of an issue has elevated since initiation, you may escalate the incident to the appropriate resource, as outlined by each product support team. The corresponding resource will meet with you and any Tyler staff to establish a mutually agreeable plan for addressing the defect.

Remote Support Tool

Some support calls may require further analysis of the Client's database, processes or setup to diagnose a problem or to assist with a question. Tyler will, at its discretion, use an industry-standard remote support tool. Tyler's support team must have the ability to quickly connect to the Client's system and view the site's setup, diagnose problems, or assist with screen navigation. More information about the remote support tool Tyler uses is available upon request.

Exhibit D
Third Party Terms

REMAINDER OF PAGE INTENTIONALLY LEFT BLANK

Exhibit D
Schedule 1
Hyperlinked Terms

Socrata Solution Terms. Your use of certain Tyler solutions includes Tyler's Socrata data platform . Your rights, and the rights of any of your end users, to use Tyler's Socrata SaaS Services Terms of Services, available at https://www.tylertech.com/terms/socrata-saas-services-terms-of-service. By signing a Tyler Agreement or Order Form, or accessing, installing, or using any of the Tyler solutions listed at the linked terms, you certify that you have reviewed, understand and agree to said terms.

ThinPrint Terms. Your use of Tyler Forms software and forms is subject to the End User License Agreement terms for ThinPrint Engine, ThinPrint License Server, and Connected Gateway found here: https://www.thinprint.com/en/legal-notes/eula/. By signing a Tyler Agreement or Order Form, or accessing, installing, or using Tyler Forms software or forms, you agree that you have read, understood, and agree to such terms.

Twilio Acceptable Use Policy. Your use of the Tyler solutions listed below includes functionality provided by a Third Party Developer, Twilio. Your rights, and the rights of any of your end users, to use said functionality are subject to the terms of the Twilio Acceptable Use Policy, available at http://www.twilio.com/legal/aup. By signing a Tyler Agreement or Order Form, or accessing, installing, or using any such Tyler solution, you certify that you have reviewed, understand and agree to said terms. Tyler hereby disclaims any and all liability related to your or your end user's failure to abide by the terms of the Twilio Acceptable Use Policy. Any liability for failure to abide by said terms shall rest solely with the person or entity whose conduct violated said terms.

- Electronic Warrants
- Modria
- Odyssey Notifications Add On (text notifications)
- ReadySub
- Tyler ACFR
- Tyler Notify
- Tyler Jury Manager
- Tyler Supervision
- Virtual Court

Exhibit D
Schedule 2
DocOrigin Terms

REMAINDER OF PAGE INTENTIONALLY LEFT BLANK

ATTENTION: THE SOFTWARE PROVIDED UNDER THIS AGREEMENT IS BEING LICENSED TO YOU BY **ECLIPSE CORPORATION WSL, INC. (Eclipse Corporation)** AND IS NOT BEING SOLD. THIS SOFTWARE IS PROVIDED UNDER THE FOLLOWING AGREEMENT THAT SPECIFIES WHAT YOU MAY DO WITH THE SOFTWARE AND CONTAINS IMPORTANT LIMITATIONS ON REPRESENTATIONS, WARRANTIES, CONDITIONS, REMEDIES, AND LIABILITIES.

DocOrigin

SOFTWARE LICENSE

IMPORTANT-READ CAREFULLY: This End-User License Agreement ("**Agreement**" or "**EULA**") is a legal agreement between you (either an individual person or a single legal entity, who will be referred to in this EULA as "**You**") and Eclipse Corporation WSL, Inc. referred to in this EULA as Eclipse Corporation, for the DocOrigin software product that accompanies this EULA, including any associated media, printed materials and electronic documentation (the "**Software**"). The Software also encompasses any software updates, add-on components, web services and/or supplements that may be provided to you or made available to you after the date you obtain the initial copy of the Software to the extent that such items are not accompanied by a separate license agreement or terms of use. If you receive the Software under separate terms from your distributor, those terms will take precedence over any conflicting terms of this EULA.

By installing, copying, downloading, accessing or otherwise using the Software, you agree to be bound by the terms of this EULA. If you do not agree to the terms of this EULA, do not install, access or use the Software; instead, you should remove the Software from all systems and receive a full refund.

IF YOU ARE AN AGENT OR EMPLOYEE OF ANOTHER ENTITY YOU REPRESENT AND WARRANT THAT (I) THE INDIVIDUAL ACCEPTING THIS AGREEMENT IS DULY AUTHORIZED TO ACCEPT THIS AGREEMENT ON SUCH ENTITY'S BEHALF AND TO BIND SUCH ENTITY, AND (II) SUCH ENTITY HAS FULL POWER, CORPORATE OR OTHERWISE, TO ENTER INTO THIS AGREEMENT AND PERFORM ITS OBLIGATIONS HEREUNDER.

1. LICENSE TERMS

1.1 In this Agreement a "**License Key**" means any license key, activation code, or similar installation, access or usage control codes, including serial numbers digitally created and or provided by Eclipse Corporation ,designed to provide unlocked access to the Software and its functionality.

1.2 **Evaluation License.** Subject to all of the terms and conditions of this Agreement, Eclipse Corporation grants You a limited, royalty-free, non-exclusive, non-transferable license to download and install a copy of the Software from www.docorigin.com on a single machine and use it on a royalty-free basis for no more than 120 days from the date of installation (the "**Evaluation Period**"). You may use the Software during the Evaluation Period solely for the purpose of testing and evaluating it to determine if You wish to obtain a commercial, production license for the Software. This evaluation license grant will automatically end on expiry of the Evaluation Period and you acknowledge and agree that Eclipse Corporation will be under no obligation to renew or extend the Evaluation Period. If you wish to continue using the Software You may, on payment of the applicable fees, upgrade to a full license (as further described in section 1.3 below) on the terms of this Agreement and will be issued with a License Key for the same. If you do not wish to continue to license the Software after expiry of the Evaluation Period, then You agree to comply with the termination obligations set out in section [7.3] of this Agreement. For greater certainty, any document generated by you under an evaluation license will have a 'spoiler' or watermark on the output document. Documents generated by DocOrigin software that has a valid license key file also installed will not have the 'spoiler' produced. You are not permitted to remove the watermark or 'spoiler' from documents generated using the software under an evaluation license.

1.3 **Development and Testing Licenses.** Development and testing licenses are available for purchase through authorized distributors and resellers of Eclipse Corporation only. Subject to all of the terms and conditions of this Agreement, Eclipse Corporation grants You, a perpetual (subject to termination by Eclipse Corporation due to your breach of the terms of this Agreement), non-exclusive, non-transferable, worldwide

non-sub license able license to download and install a copy of the Software from www.docorigin.com on a single machine and use for development and testing to create collateral deployable to Your production system(s). You are not entitled to use a development and testing license for live production purposes.

1.4 **Production Licenses.** Production licenses are available for purchase through authorized distributors and resellers of Eclipse Corporation only. Subject to all of the terms and conditions of this Agreement, Eclipse Corporation grants You, a perpetual (subject to termination by Eclipse Corporation due to your breach of the terms of this Agreement), non-exclusive, non-transferable, worldwide non-sub license able license to use the Software in accordance with the license type purchased by you as set out on your purchase order as further described below. For greater certainty, unless otherwise agreed in a purchase order concluded with an approved distributor of the Software, and approved by Eclipse Corporation, the default license to the Software is a per-CPU license as described in A. below:

A. **Per-CPU.** The total number of CPUs on a computer used to operate the Software may not exceed the licensed quantity of CPUs. For purposes of this license metric: (a) CPUs may contain more than one processing core, each group of two (2) processing cores is consider one (1) CPU., and any remaining unpaired processing core, will be deemed a CPU. (b) all CPUs on a computer on which the Software is installed shall be deemed to operate the Software unless You configure that computer (using a reliable and verifiable means of hardware or software partitioning) such that the total number of CPUs that actually operate the Software is less than the total number on that computer. Virtual Machines ("VM's") are considered as a server. Installing and configuring the software on multiple VM's requires one license per VM server. An enterprise license is available upon request. Pricing varies based on the size of the company.

B. **Per-Document.** This is defined as a fee per document based on the total number of documents generated annually by merging data with a template created by the Software. The combined data and template produce documents of one or more pages. A document may contain 1 or more pages. For instance, a batch of invoices for 250 customers may contain 1,000 pages, this will be counted as 250 documents which should correspond to 250 invoices.

C. **Per-Surface.** This is defined as a fee per surface based on the total number of surfaces generated annually by merging data with a template created by the Software. The combined data and template produce documents of one or more pages, the pages may be printed one side (one surface) or duplexed (2 surfaces). The documents may be rendered to a computer file (i.e. PDF), each page placed in the file is considered a surface. A document may contain 1 or more surfaces. For instance, a batch of invoices for 250 customers may contain 500 pages duplexed, this will be counted as 1000 surfaces.

1.5 **Disaster Recovery License.** You may request a Disaster Recovery license of the Software for each production license You have purchased as a failover in the event of loss of use of the production server(s). This license is for disaster recovery purposes only and under no circumstance may the disaster recovery license be used for production simultaneously with a production license with which it is paired.

1.6 **Backup Copies.** After installation of the Software pursuant to this EULA, you may store a copy of the installation files for the Software solely for backup or archival purposes. Except as expressly provided in this EULA, you may not otherwise make copies of the Software or the printed materials accompanying the Software.

1.7 **Third-Party Software License Rights.** If a separate license agreement pertaining to an item of third-party software is: delivered to You with the Software, included in the Software download package, or referenced in any material that is provided with the Software, then such separate license agreement shall govern Your use of that item or version of Third-Party Software. Your rights in respect to any third-party software, third-party data, third-party software or other third-party content provided with the Software shall be limited to those rights necessary to operate the Software as permitted by this Agreement. No other rights in the Software or third-party software are granted to You.

2. LICENSE RESTRICTIONS

Any copies of the Software shall include all trademarks, copyright notices, restricted rights legends, proprietary markings and the like exactly as they appear on the copy of the Software originally provided to You. You may not remove or alter any copyright, trademark and/or proprietary notices marked on any part of the Software or related documentation and must reproduce all such notices on all authorized copies of the Software and related documentation. You shall not sublicense, distribute or otherwise make the Software available to any third party (including, without limitation, any contractor, franchisee, agent or dealer) without first obtaining the written agreement of (a) Eclipse Corporation to that use, and (b) such third party to comply with this Agreement. You further agree not to (i) rent, lease, sell, sublicense, assign, or otherwise transfer the Software to anyone else; (ii) directly or indirectly use the Software or any information about the Software in the development of any software that is competitive with the Software, or (iii) use the Software to operate or as a part of a time-sharing service, outsourcing service, service bureau, application service provider or managed service provider offering. You further agree not to reverse engineer, decompile, or disassemble the Software.

3. UPDATES, MAINTENANCE AND SUPPORT

3.1 During the validity period of Your License Key, You will be entitled to download the latest version of the Software from the DocOrigin website www.docorigin.com. Use of any updates provided to You shall be governed by the terms and conditions of this Agreement. Eclipse Corporation reserves the right at any time to not release or to discontinue release of any Software and to alter prices, features, specifications, capabilities, functions, licensing terms, release dates, general availability or other characteristics of the Software.

3.2 On expiry of your maintenance and support contract, you will have the right to continue using the current version(s) of the Software which you downloaded prior to the date of expiry of your License Key. However, you will need to renew maintenance and support in order to receive a new License Key that will unlock the more current version(s) of the Software. For greater certainty, if you attempt to use an expired License Key to download the latest version of the Software, the Software will revert to being a locked, evaluation copy of that version of the Software.

4. INTELLECTUAL PROPERTY RIGHTS.

This EULA does not grant you any rights in connection with any trademarks or service marks of Eclipse Corporation or DocOrigin. All title and intellectual property rights in and to the Software, the accompanying printed materials, and any copies of the Software are owned by Eclipse Corporation or its suppliers. All title and intellectual property rights in and to the content that is not contained in the Software, but may be accessed through use of the Software, is the property of the respective content owners and may be protected by applicable copyright or other intellectual property laws and treaties. This EULA grants you no rights to use such content. If this Software contains documentation that is provided only in electronic form, you may print one copy of such electronic documentation.

5. DISCLAIMER OF WARRANTIES.

TO THE GREATEST EXTENT PERMITTED BY LAW, THE LICENSED SOFTWARE AND TECHNICAL SUPPORT PROVIDED BY ECLIPSE CORPORATION HEREUNDER ARE PROVIDED ON AN "AS IS" BASIS AND THERE ARE NO WARRANTIES, REPRESENTATIONS OR CONDITIONS, EXPRESS OR IMPLIED, WRITTEN OR ORAL, ARISING BY STATUTE, OPERATION OF LAW, COURSE OF DEALING, USAGE OF TRADE OR OTHERWISE, REGARDING THEM OR ANY OTHER PRODUCT OR SERVICE PROVIDED UNDER THIS AGREEMENT OR IN CONNECTION WITH THIS AGREEMENT BY ECLIPSE CORPORATION ECLIPSE CORPORATION DISCLAIM ANY IMPLIED WARRANTIES OR CONDITIONS OF QUALITY, MERCHANTABILITY, MERCHANTABLE QUALITY, DURABILITY, FITNESS FOR A PARTICULAR PURPOSE AND NON-INFRINGEMENT. ECLIPSE CORPORATION DOES NOT REPRESENT OR WARRANT THAT THE SOFTWARE SHALL MEET ANY OR ALL OF YOUR PARTICULAR REQUIREMENTS, THAT THE SOFTWARE WILL OPERATE ERROR-FREE OR UNINTERRUPTED OR THAT ALL ERRORS OR DEFECTS IN THE SOFTWARE CAN BE FOUND OR CORRECTED.

In certain jurisdictions, some or all of the provisions in this Section may not be effective or the applicable law may mandate a more extensive warranty in which case the applicable law will prevail over this Agreement.

6. INDEMNIFICATION & LIMITATIONS OF LIABILITY.

6.1 Eclipse Corporation shall defend and/or settle at its expense, any claims, actions, allegations or proceedings against You to the extent arising out of or relating to misappropriation or infringement by the Software of any third party's proprietary or intellectual property right ("**Claims**"), and Eclipse Corporation shall pay all damages finally awarded by a court of competent jurisdiction to such third party against You, or any settlement amounts agreed by Eclipse Corporation; subject to the conditions that, You shall notify Eclipse Corporation promptly of any You Claims, permit Eclipse Corporation to control the defense and settlement of such Claims and assist Eclipse Corporation, at Eclipse Corporation's expense, in defending or settling such Claims. Eclipse Corporation shall not be liable for any settlement amounts entered into by You without Eclipse Corporation's prior written approval. If Eclipse Corporation has reason to believe that it would be subject to an injunction or continuing damages based on the Software, then Eclipse Corporation may (and if Eclipse Corporation or any of its customers or third party software suppliers is subject to an injunction or continuing damages based on the Software), then notwithstanding any other provision in this Agreement, Eclipse Corporation shall be entitled to either modify the Software to make it non-infringing and/or remove the misappropriated material, replace the Software or portion thereof with a service or materials that provide substantially the same functionality or information, or, if neither of the foregoing is commercially practicable, require You to cease using the Software and refund to You (a) a pro rata portion of any one (1) time fees (based on a three (3) year, straight-line depreciation schedule from the date of payment), and (b) any fees that have been pre-paid by You but are unused. The foregoing notwithstanding, Eclipse Corporation shall have no liability for a claim of infringement or misappropriation to the extent caused by (i) the combination of the Software with any other service, software, data or products not provided or approved by Eclipse Corporation; or (ii) the use of any material provided by You or any end users, (iii) any breach by You of this Agreement. THE FOREGOING IS ECLIPSE CORPORATION'S SOLE AND EXCLUSIVE LIABILITY, AND YOUR SOLE AND EXCLUSIVE REMEDY FOR ANY INFRINGEMENT OR MISAPPROPRIATION OF ANY THIRD-PARTY INTELLECTUAL PROPERTY RIGHTS.

TO THE GREATEST EXTENT PERMITTED BY APPLICABLE LAW, IN NO EVENT SHALL ECLIPSE CORPORATION BE LIABLE TO YOU OR ANY OTHER PERSON FOR ANY DIRECT, INDIRECT, INCIDENTAL, SPECIAL, PUNITIVE, EXEMPLARY OR CONSEQUENTIAL DAMAGES WHATSOEVER, INCLUDING WITHOUT LIMITATION, LEGAL EXPENSES, LOSS OF BUSINESS, LOSS OF PROFITS, LOSS OF REVENUE, LOST OR DAMAGED DATA, LOSS OF COMPUTER TIME, COST OF SUBSTITUTE GOODS OR SERVICES, OR FAILURE TO REALIZE EXPECTED SAVINGS OR ANY OTHER COMMERCIAL OR ECONOMIC LOSSES ARISING OUT OF OR IN CONNECTION WITH THIS AGREEMENT, EVEN IF ECLIPSE CORPORATION HAS BEEN ADVISED OF THE POSSIBILITY OF SUCH LOSS OR DAMAGES, OR SUCH LOSSES OR DAMAGES ARE FORESEEABLE.

6.2 THE ENTIRE LIABILITY OF ECLIPSE CORPORATION AND YOUR EXCLUSIVE REMEDY WITH RESPECT TO THE SOFTWARE AND TECHNICAL SUPPORT AND ANY OTHER PRODUCTS OR SERVICES SUPPLIED BY ECLIPSE CORPORATION IN CONNECTION WITH THIS AGREEMENT FOR DAMAGES FOR ANY CAUSE AND REGARDLESS OF THE CAUSE OF ACTION, WHETHER IN CONTRACT OR IN TORT, INCLUDING FUNDAMENTAL BREACH OR NEGLIGENCE, WILL BE LIMITED IN THE AGGREGATE TO THE AMOUNTS PAID BY YOU FOR THE SOFTWARE, TECHNICAL SUPPORT OR SERVICES GIVING RISE TO THE CLAIM.

6.3 THE DISCLAIMER OF REPRESENTATIONS, WARRANTIES AND CONDITIONS AND LIMITATION OF LIABILITY CONSTITUTE AN ESSENTIAL PART OF THIS AGREEMENT. YOU ACKNOWLEDGE THAT BUT FOR THE DISCLAIMER OF REPRESENTATIONS, WARRANTIES AND CONDITIONS AND LIMITATION OF LIABILITY, NEITHER ECLIPSE CORPORATION NOR ANY OF ITS LICENSORS OR SUPPLIERS WOULD GRANT THE RIGHTS GRANTED IN THIS AGREEMENT.

7. TERM AND TERMINATION

7.1 The term of this Agreement will begin on download of the Software and, in respect of an Evaluation License, shall continue for the Evaluation Period, and in respect of all other license types defined in Section 1, shall continue for as long as You use the Software, unless earlier terminated sooner under this section 7.

7.2 Eclipse Corporation may terminate this Agreement in the event of any breach by You if such breach has not been cured within thirty (30) days of notice to You. No termination of this Agreement will entitle You to a refund of any amounts paid by You to Eclipse Corporation or its applicable distributor or reseller or affect any obligations You may have to pay any outstanding amounts owing to Eclipse Corporation or its distributor.

7.3 Your rights to use the Software will immediately terminate upon termination or expiration of this Agreement. Within thirty (30) days of termination or expiration of this Agreement, You shall purge all Software and all copies thereof from all computer systems and storage devices on which it was stored, and certify such to Eclipse Corporation

8. GENERAL PROVISIONS

8.1 **No Waiver.** No delay or failure in exercising any right under this Agreement, or any partial or single exercise of any right, will constitute a waiver of that right or any other rights under this Agreement. No consent to a breach of any express or implied term set out in this Agreement constitutes consent to any subsequent breach, whether of the same or any other provision.

8.2 **Severability.** If any provision of this Agreement is, or becomes, unenforceable, it will be severed from this Agreement and the remainder of this Agreement will remain in full force and effect.

8.3 **Assignment.** You may not transfer or assign this Agreement (whether voluntarily, by operation of law, or otherwise) without Eclipse Corporation 's prior written consent. Eclipse Corporation may assign this Agreement at any time without notice. This Agreement is binding upon and will inure to the benefit of both parties, and their respective successors and permitted assigns.

8.4 **Governing Law and Venue if You are located in the USA.** This Agreement shall be governed by the laws of the State of Texas if You are located in the USA. No choice of laws rules of any jurisdiction shall apply to this Agreement. You consent and agree that the courts of the State of Texas shall have jurisdiction over any legal action or proceeding brought by You arising out of or relating to this Agreement, and You consent to the jurisdiction of such courts for any such action or proceeding.

8.5 **Governing Law and Venue if You are not located in the USA.** This Agreement shall be governed by the laws of the Province of Ontario in Canada if You are not located in the USA . No choice of laws rules of any jurisdiction shall apply to this Agreement. You consent and agree that the courts of the Province of Ontario in Canada shall have jurisdiction over any legal action or proceeding brought by You arising out of or relating to this Agreement, and You consent to the jurisdiction of such courts for any such action or proceeding.

8.6 **Entire Agreement.** This Agreement is the entire understanding and agreement between You and Eclipse Corporation with respect to the subject matter hereof, and it supersedes all prior negotiations, commitments and understandings, verbal or written, and purchase order issued by You. This Agreement may be amended or otherwise modified by Eclipse Corporation from time to time and the most recent version of the Agreement will be available on the Eclipse Corporation website www.docorigin.com.

Last Updated: July 22, 2017

Exhibit D
Schedule 3
Koa Hills Terms

Software as a Service AGREEMENT

This Software as a Service Agreement ("Agreement"), made as of the date of last signature below ("Effective Date"), is by and between Koa Hills Consulting, a Nevada LLC ("Supplier"), having an office for notices at P.O Box 58, Reno, NV 89504, and City of Opa Locka ("Client"), located at 3400 NW 135th Street, Opa Locka, FL 33054-4708

INTENDING to be legally bound, Supplier and Client agree that the following terms and conditions will apply to the SaaS Software and services provided under this Agreement, including the attached Statement of Work which is incorporated by reference.

1. DEFINITIONS

Whenever used in this Agreement, any schedules, exhibits, or addenda to this Agreement, the following terms shall have the meanings assigned below. Other capitalized terms used in this Agreement are defined in the context in which they are used.

1.1 "***Agreement***" means this Software as a Service Agreement between Supplier and Client, inclusive of all schedules, exhibits, attachments, addenda, and other documents incorporated by reference.

1.2 "***Authorized User***" means the employees of the Client.

1.3 ***"Confidential Information"*** means any information that a disclosing party treats in a confidential manner and that is marked "Confidential Information" prior to disclosure to the other party. Confidential Information does not include information which: (a) is public or becomes public through no breach of the confidentiality obligations herein; (b) is disclosed by the party that has received Confidential Information (the "Receiving Party") with the prior written approval of the other party; (c) was known by the Receiving Party at the time of disclosure; (d) was developed independently by the Receiving Party without use of the Confidential Information; (e) becomes known to the Receiving Party from a source other than the disclosing party through lawful means; (f) is disclosed by the disclosing party to others without confidentiality obligations; or (g) is required by law to be disclosed.

1.4 "***Documentation***" means, collectively: (a) all materials published or otherwise made available to Client by Supplier that relate to the functional, operational and/or performance capabilities of the Software; (b) all user, operator, system administration, technical, support and other manuals and all other materials published or otherwise made available by Supplier that describe the functional, operational and/or performance capabilities of the Software; (c) any Requests for Information and/or Responses for Proposals (or documents of similar effect) issued by Client, and the responses thereto from Supplier, and any document which purports to update or revise any of the foregoing.

1.5 "***Enhancements***" means any improvements, modifications, upgrades, updates, fixes, revisions and/or expansions to the Software that Supplier may develop or acquire and incorporate into its standard version of the Software or which the Supplier has elected to make generally available to its clients who are on a support and/or maintenance plan.

1.6 ***"Intellectual Property Rights"*** includes without limitation all right, title, and interest in and to all (a) Patent and all filed, pending, or potential applications for Patent, including any reissue, reexamination, division, continuation, or continuation-in-part applications throughout the world now or hereafter filed; (b) trade secret rights and equivalent rights arising under the common law, state law, federal law, and laws of foreign countries; (c) copyrights, other literary property or authors rights, whether or not protected by copyright or as a mask work, under common law, state law, federal law, and laws of foreign countries; and (d) proprietary indicia, trademarks, tradenames, symbols, logos, and/or brand names under common law, state law, federal law, and laws of foreign countries.

1.7 ***"Project Manager"*** means the individual who shall serve as each party's point of contact with the other party's personnel as provided in this Agreement. The initial Project Managers and their contact information are set forth in the Notices section below and may be changed by a party at any time upon written notice to the other party.

1.8 ***"SaaS Fees"*** means the fees for the SaaS Services identified in the SOW/Quote.

1.9 ***"SaaS Services"*** means the right to use the Historical Data Archive Software, receive maintenance and support.

1.10 ***"SOW"*** means the standard implementation plan describing what services/data will be provided to implement the Historical Data Archive software.

1.11 ***"Support and Maintenance Services"*** means the technical support, error correction services and support, and Enhancements provided by Supplier to Client to use, maintain and enhance the Software provided by Supplier to Client.

1.12 ***"Third Party"*** means persons, corporations, and entities other than Supplier, Client or any of their employees, contractors, or agents.

1.13 ***"Third Party Software"*** means any Software provided by Supplier to Client that Supplier licensed from a Third Party and is to be delivered by Supplier to Client in connection with the Software.

1.14 **"Version"** means one of a sequence of copies of a Software program, each incorporating new modifications commonly identified by a number in the form X.Y, where X is the Version number and Y is the release number. An increment in X (with Y reset to zero) signifies a substantial increase in the function of the program or a partial or total re-implementation, whereas Y increases each time the program is changed in any way and re-released.

1.15 **We, Us, Our** means Koa Hills Consulting LLC

1.16 **You** and similar terms means the Client

2. Rights Granted and Restrictions

2.1 Koa Hills Consulting LLC grants to you a non-exclusive non-assignable limited right to use to use the Historical Archive Database SaaS Services for your internal business purposes only as of the effective date. Your rights to use the Historical Archive database software are perpetual but may be revoked if you fail to comply with any material terms of this agreement and have not cured such material failure within 30 days.

2.2 SaaS fees – You agree to pay us SaaS Fees. If the annual fee is not paid when due your SaaS Service to use the software will be suspended unless and until payment is made in full.

2.3 The documentation is licensed to you and may be used and copied by your employees for internal, non-commercial reference purposes only.

2.4 Client understands and agrees that, except as permitted by this Agreement, it may not: (a) sell, assign, lease, license, sub-license or otherwise distribute the Software or Documentation, (b) use the Software for the purposes of providing commercial data processing services to Third Parties, such as commercial use in a service bureau, timesharing, remote batch, or other similar commercial operation; (c) create or attempt to create, or permit others to create or attempt to create, by reverse engineering or any other process, the Software.

2.5 We reserve all rights not expressly granted to you in this agreement. The Historical Archive Database and documentation are protected by copyright and other intellectual property laws and treaties. We own the title, copyright and other intellectual property rights in the Historical Archive Database Software and the documentation.

3. Support and Maintenance Services

3.1 The Client shall receive the general help desk Support and Maintenance Services offered by Supplier.

3.2 The Project Managers, or such persons as otherwise designated by Client and Supplier, shall serve as said parties' contacts for all communications relating to Support and Maintenance Services. Each party may change its own contact person by written notice to the other party.
3.3 Except as otherwise provided in a signed addendum to this Agreement, nothing herein shall obligate Supplier to enhance the Software in any respect or on any particular date. The decision as to whether and/or when, to enhance the Software will be within Supplier's discretion.

4. Professional Services

4.1 We will provide the implementation services outlined in the Statement of Work (SOW)
4.2 You agree to pay the professional services fees for our services in the amounts set forth in the Tyler Technologies, Inc. agreement Investment Summary and as indicated in Exhibit B of such agreement. The Client acknowledges that the fees stated for such services are good faith estimates of the time and materials required for your implementation.
4.3 Additional Professional Services. If additional work beyond the scope of contracted services is required or if the Client requests additional work outside the original SOW, then a change order will be produced with the hours required/requested at the current hourly rate.
4.4 Access and Requirements. At no cost to Koa Hills Consulting LLC, Client agrees to provide us with full and free access to your personnel and equipment and network as may be reasonably necessary to provide implementation and installation services, subject to reasonable security protocols.
4.5 Client Assistance. You acknowledge that the implementation of the Historical Archive Database software is a cooperative process requiring time and effort from your personnel. We will not be liable for failure to meet deadlines or milestones when such failure is due to Force Majeure or by failure of your personnel to provide cooperation and assistance.

5. Fees, Invoicing, Payment, and Invoice Disputes

5.1 Client agrees to pay all undisputed amounts due to Supplier in accordance with the Tyler Technologies SaaS Agreement to which these terms are an exhibit. Such fees will be payable by client and within thirty (30) calendar days of Client's receipt of Supplier's invoice or the invoice due date, whichever is later.

5.2 If an invoiced amount is disputed in good faith by the Client, then the Client shall work with the Supplier to resolve the dispute. Client may suspend the payment of all disputed amounts until the dispute is resolved. Client has 30 days from the invoice date to dispute an invoice in writing to the Supplier.

6. Term and Termination

6.1 Term. This Agreement shall be effective as of the Effective Date. The initial term of the SaaS Services is 5 years beginning with the availability of the SaaS Services and ends five (5) years later, unless earlier terminated as set forth below. Upon expiration of the initial term, and upon mutual agreement of both parties, this Agreement may renew for up to five (5) additional five (5) year renewal terms, each at our then-current SaaS Fees unless terminated in writing by either party at least sixty (60) days prior to the end of the initial term or the end of the then-current renewal term. We will provide you notice of any increase in SaaS Fees no less than ninety (90) days prior to the commencement of the renewal term. You will then have until sixty (60) days prior to the termination of the current term to agree to a renewal of this Agreement at the prices contained in our notice, or as we may otherwise agree. Your right to access or use the Historical Data Archive Software and the SaaS Services will terminate at the end of this Agreement.

6.2 This Agreement may be terminated as set forth below. In the event of termination, you will pay us for all undisputed fees and expenses related to the software, products, and/or services you have received, or we have incurred or delivered, prior to the effective date of termination. Disputed fees and expenses in all terminations other than your termination for cause must have been submitted as invoice disputes

6.3 Either party may terminate this Agreement if the other party intentionally and materially breaches this Agreement and then fails to correct such breach within thirty (30) days. Written notice of the breach will be provided to the offending party as soon as the breach is identified. In the event of an uncorrected breach this Agreement can be terminated immediately.

6.4 Failure to Pay SaaS Fees - You acknowledge that continued access to the SaaS Services is contingent upon your timely payment of SaaS Fees. If you fail to timely pay the SaaS Fees, we may discontinue the SaaS Services and deny your access to the Historical Data Archive Software. We may also terminate this Agreement if you don't cure such failure to pay within forty-five (45) days of receiving written notice of our intent to terminate.

6.5 Fees for Termination without Cause - Client hereby acknowledges that we have invested time and personnel in the development of the software being licensed to the Client. Therefore, termination of this Agreement without cause during the initial term will result in a financial hardship to us. If you terminate this Agreement during the initial term for any reason other than cause, Force Majeure, or lack of appropriations, or if we terminate this Agreement during the initial term for your failure to pay SaaS Fees, you shall pay us the following early termination fees:

a. if you terminate during the first year of the initial term, 100% of the SaaS Fees through the date of termination plus 25% of the SaaS Fees then due for the remainder of the initial term;

b. if you terminate during the second year of the initial term, 100% of the SaaS Fees through the date of termination plus 15% of the SaaS Fees then due for the remainder of the initial term; and

c. if you terminate after the second year of the initial term, 100% of the SaaS Fees through the date of termination plus 10% of the SaaS Fees then due for the remainder of the initial term.

6.6 The following Sections shall survive the expiration or termination of this Agreement: Section 6, 7, 9, 10, 11, 12, 13, 15 and 16. Any terms of this Agreement which by their nature extend beyond its termination remain in effect until fulfilled and apply to respective successors and assignees.

7. Warranty, Limitation of Liability, and Indemnification

7.1 Supplier represents and warrants that the Software provided under this Agreement shall function substantially in accordance with the Documentation and produce results substantially in accordance with the Documentation. Supplier's obligations for breach of the Software Warranty shall be limited to using its best efforts, at its own expense, to correct or replace that portion of the Software which fails to conform to such warranty, and, if Supplier is unable to correct any breach in the Software Warranty by the date which is sixty (60) days after Client provides notice of such breach, Client may, in its sole discretion, either extend the time for Supplier to cure the breach or terminate this Agreement. This will be your sole remedy should we be unable to cure the defect.

7.2 THE WARRANTIES SET FORTH ABOVE ARE IN LIEU OF ALL OTHER WARRANTIES, EXPRESS OR IMPLIED, WITH REGARD TO THE SOFTWARE PURSUANT TO THIS AGREEMENT, INCLUDING, BUT NOT LIMITED TO, ANY IMPLIED WARRANTIES OF MERCHANTABILITY AND FITNESS FOR A PARTICULAR PURPOSE.

7.3 If the Software and/or Documentation, or any part thereof, is the subject of any claim for infringement of any patent, copyright, trademark, or other proprietary right or violates any trade secret or other contractual right of any Third Party, or if it is adjudicated by a court of competent jurisdiction that the Software and/or Documentation, or any part thereof, infringes any patent, copyright, trademark, or other proprietary right or violates any trade secret or other contractual right of any Third Party, and Client's use of the Software and/or Documentation, or any part of it, is enjoined or interfered with in any manner, Supplier shall, at its sole expense and within sixty (60) calendar days of such injunction or interference, either: (a) procure for Client the right to continue using the Software and/or Documentation free of any liability for infringement or violation; (b) replace or modify the Software and/or Documentation, or parts thereof, with non-infringing Software and/or Documentation of equivalent or better functionality.

7.4 Supplier shall have no obligation to indemnify Client for a claim if: (a) Client uses the Software in a manner contrary to the provisions of this Agreement and such misuse is the cause of the infringement or misappropriation; or (b) Client's use of the Software in combination with any product, software or system not authorized, approved or recommended by Supplier and such combination is the cause of the infringement or misappropriation; or (c) altering or modifying the Historical Archive Database software including any modification by a third parties at your direction or otherwise permitted by you; or (d) willful infringement, including use of the software after we notify you to discontinue use due to such a claim.

7.5 Supplier shall defend, indemnify and hold the Client, its officers, employees, and agents harmless from and against any and all liability, loss, expense (including reasonable attorneys' fees), or claims for injury or damages arising out of the performance of this Agreement but only in proportion to and to the extent such liability, loss, expense, attorneys' fees, or claims for injury or damages caused by or resulting from the negligent or intentional acts or omissions of the Supplier, its officers, employees, or agents.

7.6 Client shall defend, indemnify and hold the Supplier, its officers, employees, and agents harmless from and against any and all liability, loss, expense (including reasonable attorneys' fees), or claims for injury or damages arising out of the performance of this Agreement but only in proportion to and to the extent such liability, loss, expense, attorneys' fees, or claims for injury or damages caused by or resulting from the negligent or intentional acts or omissions of the Client, its officers, employees, or agents.

7.7 The indemnifying party shall keep the other reasonably apprised of the continuing status of the claim, including any proceedings resulting from it, and shall permit the other party, at its expense, to participate in the defense or settlement of the claim provided that the indemnifying party has the sole right to control the defense.

7.8 LIMITATION OF LIABILITY - EXCEPT AS OTHERWISE EXPRESSLY SET FORTH IN THIS AGREEMENT, OUR LIABILITY FOR DAMAGES ARISING OUT OF THIS AGREEMENT, WHETHER BASED ON A THEORY OF CONTRACT OR TORT, INCLUDING NEGLIGENCE AND STRICT LIABILITY, SHALL BE LIMITED TO YOUR ACTUAL DIRECT DAMAGES, NOT TO EXCEED; (A) PRIOR TO FORMAL TRANSITION TO MAINTENANCE AND SUPPORT TWO TIMES (2X) THE TOTAL ONE TIME FEES SET FORTH IN THE TYLER TECHNOLOGIES, INC. SAAS AGREEMENT. ; OR (B) AFTER FORMAL TRANSITION TO MAINTENANCE AND SUPPORT, TWO TIMES (2X) THE THEN CURRENT ANNUAL MAINTENANCE AND SUPPORT FEE. THE PARTIES ACKNOWLEDGE AND AGREE THAT THE PRICES SET FORTH IN THIS AGREEMENT ARE SET IN RELIANCE UPON THIS LIMITIATION OF LIABILITY AND TO THE MAXIMUM EXTENT ALLOWED UNDER APPLICABLE LAW, THE EXCLUSION OF CERTAIN DAMAGES, AND EACH SHALL APPLY REGARDLESS OF THE FAILURE OF AN ESSENTIAL PURPOSE OF ANY REMEDY. THE FOREGOING LIMITIATION OF LIABILITY SHALL NOT APPLY TO CLAIMS THAT ARE SUBJECT TO SECTION 8.3 THROUGH 8.6.

7.9 EXCLUSION OF CERTAIN DAMAGES – TO THE MAXIMUM EXTENT PERMITTED BY APPLICABLE LAW, IN NO EVENT SHALL WE BE LIABLE OR ANY SPECIAL, INCIDENTAL, PUNITIVE, INDIRECT OR CONSEQUENTIAL DAMAGES WHATSOEVER, EVEN IF WE HAVE BEEN ADVISED OF THE POSSIBILITY OF SUCH DAMAGES.

8. Insurance

During the course of performing services under this agreement, Koa Hills Consulting LLC agrees to maintain the following levels of insurance: (a) Commercial General Liability of at least $1,000,000; (b) Automobile Liability of at least $1,000,000; (c) Professional Liability of at least $1,000,000; (d) Workers Compensation of at least $1,000,000; (e) Cyber Insurance of at least $1,000,000. We will provide a certificate of insurance upon request.

9. Confidentiality

9.1 Each party acknowledges that certain information that it shall acquire from the other is of a special and unique character and constitutes Confidential Information.

9.2 The Receiving Party agrees to exercise the same degree of care and protection with respect to the Confidential Information that it exercises with respect to its own similar Confidential Information and not to directly or indirectly provide, disclose, copy, distribute, republish, or otherwise allow any Third Party to have access to any Confidential Information without prior written permission from the disclosing party. However: (a) either party may disclose Confidential Information to its employees and authorized agents who have a need to know; (b) either party may disclose Confidential Information if so required to perform any obligations under this Agreement; and (c) either party may disclose Confidential Information if so required by law (including court order or subpoena).

10. Title/Ownership

10.1 Client acknowledges that Supplier holds all right, title and interest in any copyrights, patents, trade secrets and any other Intellectual Property Rights in the Software. Nothing in this Agreement shall be construed to convey any title or ownership rights in the Software to the Client.

10.2 All data created and/or processed by the Software is and shall remain the property of the Client and shall

in no way become attached to the Software, nor shall Supplier have any rights in or to the data of Client.
10.3 Any documents, forms, compilations and/or spreadsheets that are generated from the utilization of the functionality of the Software are not the intellectual property of the Supplier and can be used by Client in its ordinary course of business, including but not limited to Client sharing such documents with Third Parties.

11. Dispute Resolution

11.1 Designated Supplier and Client Project Managers shall meet as often as is reasonably required to review the performance of the parties under this Agreement and to resolve any disputes.

11.2 If a dispute arises and these representatives are unable to resolve the dispute within fifteen (15) business days, then the dispute will be escalated to an executive level representative of each party with the authority to resolve such matters. Supplier and Client executives must meet to resolve any disputes. To the extent provided by law, all meetings and discussions between executive level representatives will be deemed confidential settlement discussions not subject to disclosure under Federal Rule of Evidence 408 or any similar state rule. If we fail to resolve the dispute, then the parties shall participate in non-binding mediation to resolve the dispute. If the dispute remains unresolved after mediation, then either party may assert our respective rights and remedies in a court of competent jurisdiction. Nothing in this section shall prevent either party from seeking necessary injunctive relief during the dispute resolution procedures.

12. Taxes

All taxes required for the Software purchase by Client under this Agreement will be the responsibility of Client. Client is responsible for remitting all taxes to the taxing authority.

13. Joint Drafting

SUPPLIER AND CLIENT ACKNOWLEDGE THAT EACH HAS BEEN ADVISED BY THEIR RESPECTIVE ATTORNEYS REGARDING THE TERMS, EFFECTS AND CONSEQUENCES OF THE AGREEMENT. ACCORDINGLY, SUPPLIER AND CLIENT AGREE THAT THIS AGREEMENT SHALL NOT BE CONSTRUED AS HAVING BEEN DRAFTED SOLELY BY OR ON BEHALF OF EITHER PARTY.

14. Assignment

This agreement shall be binding on and shall be for the benefit of either your or our successor(s) or permitted assign(s). Neither party may assign this Agreement without prior written consent of the other party; provided, however your consent is not required for assignment by us because of a corporate reorganization, merger, acquisition, or purchase of substantially all of our assets.

15. Governing Law

This Agreement shall be governed by, and construed in accordance with, the laws of the State of Nevada, excluding its conflicts of laws provisions. Any dispute, claims, demands or actions arising out of or in relation to this Agreement, or the interpretation, making, performance, breach, or termination thereof shall be brought in and resolved by the Superior Court of the County of Washoe in Reno, Nevada.

16. No Intended Third Party Beneficiaries

This agreement is entered into solely for the benefit of Supplier and Client. No third party will be deemed a beneficiary of this agreement, and no third party will have the right to make any claim or assert any right under this agreement.

17. Client Name

Client agrees that Supplier can identify Client by name in client lists, and with prior written consent marketing presentations and promotional materials.

18. Force Majeure

Neither party shall be liable to the other for failure or delay of performance hereunder due to earthquake, flood, storm, fire, epidemics, acts of government, governmental agencies or officers, war, insurrection, riots, civil disturbances, or any other cause beyond the reasonable control of the non-performing party. The non-performing party will promptly notify the other party in writing of an event of force majeure, the expected duration of the events, and its anticipated effect on the ability of the party to perform its obligations and make reasonable effort to remedy the event of force majeure in a timely fashion.

19. Notices

19.1 All notices, requests, consents, approvals, or authorizations in connection with this Agreement (collectively, "Notices") must be given in writing, sent by personal delivery, messenger, overnight delivery service, electronic mail with delivery acknowledgement or the United States mail, postage prepaid, certified, or registered, return receipt requested, and addressed as follows:

If to Supplier:
Koa Hills Consulting LLC
P.O Box 58, Reno, NV 89504
Attention: John Schwartz

If to Client:
City of Opa Locka
3400 NW 135th Street, Opa Locka, FL 33054-4708
Attention: [POSITION TITLE]

19.2 All Notices sent in accordance with the foregoing shall be deemed received by the intended recipient: (a) upon personal delivery; or (b) One (1) business day following deposit with an overnight courier service submitted in time for next day delivery or (c) by email acknowledgement.

20. Severability

20.1 The terms of this Agreement are severable. If any provision of this Agreement, or any portion thereof, is declared by a court of competent jurisdiction to be illegal, void, invalid or unenforceable, that provision of the Agreement will be enforced to the maximum extent permissible so as to affect the intent of the parties, and the remainder of the Agreement will continue in full force and effect for the same purpose.

20.2 In the event that any provision shall be held to be illegal, void, invalid or unenforceable, that provision shall in good faith be renegotiated to reflect as closely as possible the intent of the original provisions of this Agreement in a manner that is valid and enforceable.

21. Waiver

21.1 The waiver of any performance required under this Agreement or of any breach of any provision of this Agreement shall not operate or be construed as a waiver of any subsequent failure to perform or breach of the same or any other provision of this Agreement.

21.2 The delay or omission by either party to exercise any right or remedy under this Agreement shall not be construed to be either acquiescence or the waiver of the ability to exercise any right or remedy in the future.

22. Counterparts

This Agreement may be executed in multiple counterparts, each of which when so executed and delivered shall be deemed an original, and such counterparts together shall constitute one and the same instrument. Each party shall receive a duplicate original of the counterpart copy or copies executed by it. For purposes hereof, a facsimile or emailed copy of this Agreement, including the signature pages hereto, shall be deemed

an original, and each party agrees that it will not contest the validity of the execution of this Agreement solely based on any signature being a facsimile or electronic transmission. If this Agreement is executed in counterparts, no signatory hereto shall be bound by this Agreement until all parties have executed a counterpart of this Agreement. Each party represents to the other that the signatory set forth below is duly authorized to bind that party to this agreement.

23. Headings

The section headings in this Agreement are inserted for convenience only, are not substantive, and shall not be interpreted to define, describe, modify, or otherwise limit the interpretation or scope of the provision under the section heading or of the Agreement as a whole.

24. Entire Agreement

This Agreement, together with all the incorporated exhibits, schedules, attachments, and proposals and addenda, constitutes the entire, final, and exclusive Agreement between the parties with respect to the subject matter herein and supersedes all prior and contemporaneous agreements, understandings, negotiations, and discussions, whether oral or written, between the parties. The parties expressly disclaim the right to claim the enforceability or effectiveness of any oral modifications to this Agreement or any amendments based on course of dealing, waiver, release, estoppel, or other similar legal theory. Any amendment or modification to this Agreement shall be effective only if in writing and signed by duly authorized representatives of both Supplier and Client.

The authorized signatory from each party has read the Agreement, understands it, and is authorized to bind his/her organization. This Agreement becomes binding when signed by the authorized signatory of both parties.

IN WITNESS WHEREOF, the parties have entered into this Agreement as of the Effective Date.

Koa Hills Consulting LLC	**City of Opa Locka, Florida**
By: _____	By: _____
Print Name: John Schwartz	Print Name: _____
Title: COO	Title: _____
Date: _____	Date: _____

Historical Database Archive Scope of Work

Introduction

Koa Hills Consulting (KHC) will deliver a web-based data archival system to maintain access to historical data in addition to the data that is converted directly to Munis. This includes information that is not typically converted into Munis, such as closed purchase orders or inactive vendors, as well as additional years of historical data that the client needs. The build out of the historical data archive uses the same Munis data conversion templates and mappings created during the implementation process. Users will be able to access an intuitive web-based application which looks and feels like the Munis Central applications in order to retrieve historical information.

The historical information includes the following areas of data:

- General Ledger
- Projects
- Budgets
- Vendors
- Accounts Payable Checks
- Accounts Payable Invoices
- Purchase Orders
- Contracts
- Employee Demographics
- Employee Job/Salary
- Employee Deductions
- Payroll Check History

Application Features

The historical data archive is a web-based module which provides menu driven access to a series of screens and reports designed for user access. The web front end is very similar in nature to the inquiry options within Munis to provide users with a familiar and intuitive interface. The screens provide the ability to perform advanced searches and return data which may then be viewed and exported to Excel, if needed.

The following screens will be available within the historical archive database. Information on these screens will correlate with the Munis screens whenever possible; however, certain pieces of information which would become stale over time are omitted. All data available through the Munis Conversion programs have the opportunity for inclusion in the data archive.

Screen	Content
Accounts, Project Central	All related financial activity for a given Munis GL Organization, Object and Project including budget, actual and encumbrance data.
Vendor Central	All related financial activity for a vendor, and drill down into the detail in: Checks, Invoices, Purchase Order, Contracts.
Purchasing Central	Purchase order and line item detail with associated AP Invoices.
Contracts Central	Contract information with associated AP Invoices and Purchase Orders.
Invoice Central	AP Invoice information with associated purchase orders and payment details.
Check History	Employee payroll check history

Employee Job/Salary	Employee job and salary history
Employee Deductions	Employee payroll deductions
Employee Master	Employee tracking and general information

Deliverables

The following deliverables will be provided with the solution:

- Web based application to access historical data
- Training to use the historical data application
- KHC will assist client in converting and populating data input spreadsheets to match mapping requirements
- Data conversion templates for mapping
    - KHC will use the same mapping spreadsheets as the Munis Data Conversion Team
- Historical data will be converted into the archival database using the Munis data structure

Client Responsibilities

- Client shall provide access to fulfill the necessary requirements to historical data files, data mapping expertise and any other necessary information to facilitate the archival process
- Client shall furnish legacy system documentation for data mapping, as needed
- Client shall furnish the required hardware to run the archival system unless the client chooses the SaaS option
- Client shall provide necessary access to the client internal network for installation and configuration if needed
- Client shall provide GL Account Crosswalk mapping for any legacy accounts which are desired to maintain for all years archived with the new updated Munis format
- Client shall assist with data validation and testing by running reports comparing totals and details on legacy data between systems

Hardware Requirements

If not using the SaaS solution, the client will supply the stand-alone server with a recent version of Windows Server Operating System, SQL server, SSRS, and the Management Studio package. Though the server is a read only, Koa Hills recommends a duplicate hard drive backup to cover disasters and possible drive failures. Koa Hills will create a schema which closely matches that of Munis data migration for each sub-system.

Assumptions

- The server will be designed for administrative access only and there will be no layered user security.
- Data is consistent for all years. If the data has changed (ex. COA length changed at some point in the past and is different from the current data structure in Munis), then additional professional services may be required.
- Legacy system data will be converted from a single source. If there are multiple legacy systems, then additional professional services may be required.
- All work will be performed remotely. Travel costs are not included and will be billed as incurred if travel is required.

Exhibit D
Schedule 4
BMI Terms

End-User License Agreement (EULA) for AssetTrak ARS Desktop Computer

IMPORTANT-READ CAREFULLY: This End-User License Agreement ("EULA") is a legal agreement between you (either an individual or a single entity) and the Manufacturer (BMI Systems Group) of the application software for the desktop version of "AssetTrak ARS.

Software Product License

The "AssetTrak ARS Software Product" is protected by copyright laws and international copyright treaties, as well as other intellectual property laws and treaties. The "AssetTrak ARS Software Product" is licensed, not sold.

1. GRANT OF LICENSE. This EULA grants you the following rights:

* **Software.** You may install and use one copy of the "AssetTrak ARS Software Product" on (1) computer per license.

DESCRIPTION OF OTHER RIGHTS AND LIMITATIONS

***Limitations of Reverse Engineering, Decompilation and Disassembly.** You may not reverse engineer, decompile, or disassemble the "AssetTrak ARS Software Product", except and only to the extent that such activity is expressly permitted by applicable law notwithstanding this limitation.

***Separation of Components.** The "AssetTrak ARS Software Product" is licensed as a single product. Its component parts may not be separated for use on more than one computer.

***Single Computer.** "AssetTrak ARS Software Product" is licensed with a Computer as a single product.

***Software Transfer.** You may permanently transfer all of your rights under this EULA only as part of a transfer to a new computer if you transfer all of the "AssetTrak ARS Software Product" (including all component parts, the media and printed materials if applicable, the Certificate(s) or Authenticity), and the recipient agrees to the terms of this EULA. A second copy for backup only is permitted. Only (1) copy can be used at a time.

***Termination.** Without prejudice to any other rights BMI System Group may terminate this EULA if you fail to comply with the terms and conditions of this EULA. In such event, you must destroy all copies of the "AssetTrak ARS Software Product" and all of its component parts.

3. COPYRIGHT. All title and copyrights in and to the "AssetTrak ARS Software Product" (including but not limited to any images, photographs, animations, video, audio, music, text, and "applets" incorporated into the" AssetTrak ARS Software Product" the accompanying printed materials, and any copies of the" AssetTrak ARS Software Product", are owned by BMI Systems Group or its suppliers. You may not copy the printed materials accompanying the "AssetTrak ARS Software Product". All rights not specifically granted under this EULA are reserved by BMI Systems Group.

4. PRODUCT SUPPORT. Product Support for the "AssetTrak ARS Software Product" is provided by BMI Systems Group or its subsidiaries. For product support, please refer to BMI's support number provided in the documentation for the software. Should you have any questions concerning this EULA, or if you desire to contact BMI Systems Group for any other reason, please refer to the address provided in the documentation for the "AssetTrak ARS Software Product".

5. U.S. GOVERNMENT RESTRICTED RIGHTS. The "AssetTrak ARS Software Product" and documentation are provided with RESTRICTED RIGHTS. Use, duplication, or disclosure by the Government is subject to restrictions as set forth in subparagraph (c)(1)(ii) of the Rights in Technical Data and Computer Software clause at DFARS 252.277-7013 or sub-paragraphs (c)(1) and (2) of the Commercial Computer Software-Restricted Rights at 48 CFR 52.227-19, as applicable. Manufacturer is BMI Systems Group, P.O. Box 6280, Chandler, AZ 85246-6280

Exhibit E
Statement of Work

Statement of Work to be inserted prior to Agreement execution.

tyler technologies

TYLER & SOURCEWELL | Making Software Procurement Effortless for the Public Sector

Preparing an RFP for a new public sector software solution? Consider your options.

Sourcewell is a national agency that uses the combined purchasing power of its members to reduce the cost of procurement, including software and services solutions.

Tyler Technologies' software solutions available for purchase through a Sourcewell contract:

State and Local Government Solutions	
Brazos™ (Public Safety)	MobileEyes® (Public Safety)
Digital Health Department™ (Civic Services)	Munis® (ERP I Financials)
Document Pro™ (Records & Documents)	New World™ (ERP I Financials I Public Safety)
Eagle™ (Records & Documents)	Odyssey® (Courts & Justice)
EnerGov™ (Civic Services)	Orion™ (Appraisal & Tax)
ExecuTime™ (Workforce Management)	Socrata® (Data & Insights)
iasWorld® (Appraisal & Tax)	Softcode™ (Courts & Justice)
Incode® (ERP I Financials, Courts & Justice)	Tyler Detect™ (Cybersecurity)
School Solutions	
ExecuTime (Workforce Management)	Traversa® (Student Transportation)
Infinite Visions® (ERP I Financials)	Tyler Detect (Cybersecurity)
Munis (ERP I Financials)	Tyler Pulse™ (Data Analytics)
Socrata (Data & Insights)	Tyler SIS™ (Student Information)
Schoolmaster® (Student Information)	Versatrans® (Student Transportation)

What does this mean to me?

Sourcewell satisfies the bidding and award process — it doesn't circumvent or eliminate it. Tyler was awarded a Sourcewell contract by earning it through a bid process against competing vendors.

How do I benefit from this contract?

You get immediate discounts on Tyler products purchased through the Sourcewell contract and significant savings in time, paperwork, administration, and legal costs.

How much does it cost?

Nothing. Enjoy Sourcewell's buying opportunities through a no cost and no obligation membership.

Is there more?

Not ready to purchase an enterprise software solution just yet? Join Sourcewell now and immediately start saving money on products and services from nationally known vendors, including: software, fax machines, network equipment, heavy equipment, furniture, athletic equipment, custodial supplies, health supplies, HVAC, audiovisual products, security solutions, copiers, mailing equipment, and so much more.

When the time is right for your organization, you can buy Tyler Technologies' solutions at your convenience. It's that easy.

Sourcewell Formerly NJPA
Awarded Contract
Contract # 090320-TTI

Less hassle and you save money! Can it get any better? You decide — contact Sourcewell or your Tyler sales rep today!

www.sourcewell-mn.gov
888.894.1930
www.tylertech.com
800.772.2260

Per state law, Sourcewell is audited every year. To this end, Sourcewell contracts for an independent annual audit, the results of which are submitted to the state of Minnesota.

How can I get started today?

Join Sourcewell at **https://sourcewell-mn.gov/become-member**

Tyler's Sourcewell contract number: **090320-TTI**

TY-SW-FLY-11946-0221

© 2021 Tyler Technologies, Inc., All rights reserved.

Quoted By:	Tim Vickers
Quote Expiration:	09/30/22
Quote Name:	City of Opa-Locka-ERP-Munis Core Financials, EnerGov and Payroll/HR
Quote Description:	5 Year SaaS Quote Revised Updated 4/26/2022
Saas Term	5.00

Sales Quotation For:
City of Opa-Locka
3400 NW 135th St
Opa Locka FL 33054-4708
Phone: +1 (305) 953-2868

Tyler SaaS and Related Services

Description	Qty	Imp. Hours	Annual Fee
Financial Management			
Accounting	1	96	$ 17,346.00
Accounts Payable	1	24	$ 4,972.00
BMI Asset Track Interface	1	16	$ 1,288.00
Budgeting	1	32	$ 4,972.00
Capital Assets	1	32	$ 4,188.00
Cash Management	1	16	$ 2,859.00
Contract Management	1	16	$ 1,887.00
eProcurement	1	24	$ 2,859.00
Project & Grant Accounting	1	24	$ 3,353.00
Purchasing	1	56	$ 7,225.00
Human Resources Management			
Human Resources & Talent Management	1	88	$ 6,993.00
Payroll w/ESS	1	168	$ 8,401.00
Recruiting	1	16	$ 1,335.00

Risk Management	1	16	$ 1,603.00
Revenue Management			
Accounts Receivable	1	56	$ 3,658.00
Cashiering	1	32	$ 6,288.00
General Billing	1	24	$ 2,432.00
Civic Services			
Business Management Suite	5	112	$ 5,020.00
Civic Access - Business Management	1	24	$ 5,634.00
Civic Access - Community Development	1	24	$ 5,634.00
Community Development Suite	21	192	$ 21,084.00
e-Reviews	1	72	$ 9,188.00
Enterprise Permitting & Licensing Advanced Automation Bundle w Executive Insights	1	8	$ 14,439.00
Enterprise Permitting & Licensing Core Foundation Bundle	1	16	$ 1,912.00
Enterprise Service Requests	1	40	$ 2,888.00
My Civic	1	44	$ 8,000.00
Report Toolkit	1	0	$ 1,885.00
Workforce Mobile	10	16	$ 3,350.00
Enterprise Asset Management			
GIS	26	8	$ 6,214.00
Content Management			
Content Manager Core	1	32	$ 7,317.00
Data Insights			
Enterprise Analytics and Reporting w Executive Insights	1	64	$ 9,414.00
Additional			
Enterprise Forms Processing (including Common Form Set)	1	0	$ 3,584.00
Recurring Services			
Payroll Tax Table Updates	1	0	$ 1,000.00

Sub-Total:	$ 188,222.00
Less Discount:	$ 18,820.00

TOTAL	**1388**		**$ 169,402.00**

Professional Services

Description	Quantity	Unit Price	Extended Price	Maintenance
Business Management Enterprise Forms Library (6 Enterprise Forms)	1	$ 3,825.00	$ 3,825.00	$ 0.00
Community Development Enterprise Forms Library (5 Enterprise Forms)	1	$ 3,825.00	$ 3,825.00	$ 0.00
Enterprise Forms Processing Configuration	1	$ 1,500.00	$ 1,500.00	$ 0.00
Executive Insights Implementation	1	$ 4,800.00	$ 4,800.00	$ 0.00
Project Management	124	$ 175.00	$ 21,700.00	$ 0.00
Conversions – See Detailed Breakdown Below			$ 54,780.00	$ 0.00
Onsite Implementation	376	$ 200.00	$ 75,200.00	$ 0.00
Remote Implementation	1012	$ 175.00	$ 177,100.00	$ 0.00
TOTAL			**$ 342,730.00**	**$ 0.00**

3rd Party Hardware, Software and Services

Description	Qty	Unit Price	Unit Discount	Total Price	Unit Maint/SaaS	Unit Maint/SaaS Discount	Total Maint/SaaS
BMI AssetTrak ARS V3 Fixed Asset Mobile Scanning Device Kit - Enterprise ERP/ATARS	1	$ 2,790.00	$ 0.00	$ 2,790.00	$ 0.00	$ 0.00	$ 0.00
Cash Drawer	1	$ 260.00	$ 0.00	$ 260.00	$ 0.00	$ 0.00	$ 0.00
Hand Held Scanner - Model 1950GSR	1	$ 450.00	$ 0.00	$ 450.00	$ 0.00	$ 0.00	$ 0.00
Hand Held Scanner Stand	1	$ 30.00	$ 0.00	$ 30.00	$ 0.00	$ 0.00	$ 0.00
Koa Hills - Tyler Hosted Data Archive Module - Financials (SaaS)	1	$ 0.00	$ 0.00	$ 0.00	$ 11,285.00	$ 0.00	$ 11,285.00
Koa Hills - Tyler Hosted Data Archive Module - Financials Professional Services	1	$ 11,340.00	$ 0.00	$ 11,340.00	$ 0.00	$ 0.00	$ 0.00
MISC Hardware	1	$ 0.00	$ 0.00	$ 0.00	$ 0.00	$ 0.00	$ 0.00
MISC Hardware	1	$ 0.00	$ 0.00	$ 0.00	$ 0.00	$ 0.00	$ 0.00
Misc KOA Hills Conversion	1	$ 0.00	$ 0.00	$ 0.00	$ 0.00	$ 0.00	$ 0.00
Printer (EPSON TM-H6000V-032) includes Power Supply	1	$ 790.00	$ 0.00	$ 790.00	$ 0.00	$ 0.00	$ 0.00
VPN Device	1	$ 4,000.00	$ 0.00	$ 4,000.00	$ 0.00	$ 0.00	$ 0.00

TOTAL	**$ 19,660.00**	**$ 11,285.00**

Summary	**One Time Fees**	**Recurring Fees**
Total Tyler Software	$ 0.00	$ 0.00
Total Annual	$ 0.00	$ 169,402.00
Total Tyler Services	$ 342,730.00	$ 0.00
Total Third-Party Hardware, Software, Services	$ 19,660.00	$ 11,285.00
Summary Total	**$ 362,390.00**	**$ 180,687.00**
Contract Total	**$ 1,220,685.00**	
Estimated Travel Expenses excl in Contract Total	**$ 21,920.00**	

Unless otherwise indicated in the contract or amendment thereto, pricing for optional items will be held
For six (6) months from the Quote date or the Effective Date of the Contract, whichever is later.

Customer Approval: _____ Date: _____

Print Name: _____ P.O.#: _____

All Primary values quoted in US Dollars

Detailed Breakdown of Conversions (Included in Summary Total)

Description	Qty	Unit Price	Unit Discount	Extended Price
Accounting				
AC - Actuals up to 3 years	1	$ 1,000.00	$ 0.00	$ 1,000.00
AC - Budgets up to 3 years	1	$ 1,000.00	$ 0.00	$ 1,000.00
AC Standard COA	1	$ 2,000.00	$ 0.00	$ 2,000.00
Accounts Payable				
AP - Checks up to 5 years	1	$ 2,200.00	$ 0.00	$ 2,200.00
AP - Invoice up to 5 years	1	$ 2,800.00	$ 0.00	$ 2,800.00

AP Standard Master	1	$ 1,200.00	$ 0.00	$ 1,200.00
Capital Assets				
CA Std Master	1	$ 2,000.00	$ 0.00	$ 2,000.00
Conversions				
Business Management Conversion	1	$ 8,225.00	$ 0.00	$ 8,225.00
Community Development	1	$ 10,575.00	$ 0.00	$ 10,575.00
General Billing				
GB - Bills up to 5 years	1	$ 3,500.00	$ 0.00	$ 3,500.00
GB - Recurring Invoices	1	$ 1,680.00	$ 0.00	$ 1,680.00
GB Std CID	1	$ 1,000.00	$ 0.00	$ 1,000.00
Payroll				
PR Payroll - Accrual Balances	1	$ 1,500.00	$ 0.00	$ 1,500.00
PR Payroll - Accumulators up to 5 years	1	$ 1,400.00	$ 0.00	$ 1,400.00
PR Payroll - Check History up to 5 years	1	$ 1,200.00	$ 0.00	$ 1,200.00
PR Payroll - Deductions	1	$ 1,800.00	$ 0.00	$ 1,800.00
PR Payroll - Earning/Deduction Hist up to 5 years	1	$ 2,500.00	$ 0.00	$ 2,500.00
PR Payroll - Standard	1	$ 2,000.00	$ 0.00	$ 2,000.00
PR Payroll - State Retirement Tables	1	$ 1,400.00	$ 0.00	$ 1,400.00
Professional Services				
MISC Conversion	1	$ 0.00	$ 0.00	$ 0.00
MISC Conversion	1	$ 0.00	$ 0.00	$ 0.00
Project & Grant Accounting				
PG - Actuals up to 3 years	1	$ 1,000.00	$ 0.00	$ 1,000.00
PG - Budgets up to 3 years	1	$ 1,000.00	$ 0.00	$ 1,000.00
PGA Standard	1	$ 2,000.00	$ 0.00	$ 2,000.00
Purchasing				
Purchasing - Standard	1	$ 1,800.00	$ 0.00	$ 1,800.00
	TOTAL			**$ 54,780.00**

Optional Tyler SaaS and Related Services

Description	Qty	Imp. Hours	Annual Fee
Financial Management			
BMI CollectIT Interface	1	16	$ 1,068.00
Inventory	1	32	$ 3,472.00
Human Resources Management			
Advanced Scheduling - Up to 150 Employees	1	64	$ 8,333.00
Advanced Scheduling Mobile Access	1	0	$ 2,352.00
Employee Expense Reimbursement	1	24	$ 1,942.00
Time & Attendance - Up to 150 Employees	1	80	$ 7,220.00
Time & Attendance Mobile Access	1	0	$ 3,003.00
Revenue Management			
Citizen Self Service	1	32	$ 3,205.00
Utility Billing CIS including Graphing Agent	1	128	$ 10,441.00
Utility Billing Meter Interface	1	16	$ 2,137.00
Civic Services			
Parks and Recreation	1	64	$ 4,973.00
Enterprise Asset Management			
Asset Maintenance	5	136	$ 4,580.00
Asset Performance	1	80	$ 302.00
Data Insights			
Open Finance	1	0	$ 12,000.00
Recurring Services			
Managed Detection & Response	1	0	$ 15,000.00
TOTAL:		**672**	**$ 83,528.00**

Optional Professional Services

Description	Quantity	Unit Price	Extended Price	Maintenance
Install Fee - Managed Detection & Response	1	$ 1,000.00	$ 1,000.00	$ 0.00
Install Fee - Open Finance	1	$ 3,200.00	$ 3,200.00	$ 0.00
Source Code Escrow	1	$ 0.00	$ 0.00	$ 1,500.00
Conversion – See Detailed Breakdown Below			$ 43,000.00	$ 0.00
Onsite Implementation	172	$ 200.00	$ 34,400.00	$ 0.00
Remote Implementation	500	$ 175.00	$ 87,500.00	$ 0.00
TOTAL			**$ 169,100.00**	**$ 1,500.00**

Optional 3rd Party Hardware, Software and Services

Description	Qty	Unit Price	Unit Discount	Total Price	Unit Maint/SaaS	Unit Maint/SaaS Discount	Total Maint/SaaS
BMI Bar Code Printer Kit for CollectIT Inventory	1	$ 795.00	$ 0.00	$ 795.00	$ 0.00	$ 0.00	$ 0.00
BMI CollectIT V2 Inventory Mobile Scanning Device Kit	1	$ 3,250.00	$ 0.00	$ 3,250.00	$ 0.00	$ 0.00	$ 0.00
Pattern Stream Automated Document System - Implementation	40	$ 163.00	$ 0.00	$ 6,520.00	$ 0.00	$ 0.00	$ 0.00
Pattern Stream Automated Document System - SaaS	1	$ 0.00	$ 0.00	$ 0.00	$ 14,372.00	$ 0.00	$ 14,372.00
Touchscreen 7: Biometric and Prox Reader	1	$ 2,695.00	$ 0.00	$ 2,695.00	$ 270.00	$ 0.00	$ 270.00
TOTAL				**$ 13,260.00**			**$ 14,642.00**

Optional Conversion Details (Prices Reflected Above)

Description	Quantity	Unit Price	Discount	Total
Contract Management				
Contracts	1	$ 3,000.00	$ 0.00	$ 3,000.00
Enterprise Asset Management				
AM - Closed WO History No Cost Data	1	$ 3,000.00	$ 0.00	$ 3,000.00
AM - Work Order Asset	1	$ 4,000.00	$ 0.00	$ 4,000.00

Inventory				
IN Std Master	1	$ 2,400.00	$ 0.00	$ 2,400.00
Payroll				
HR Human Resources - Certifications	1	$ 1,400.00	$ 0.00	$ 1,400.00
HR Human Resources - Education	1	$ 1,400.00	$ 0.00	$ 1,400.00
HR Human Resources - PM Action History up to 5 years	1	$ 1,400.00	$ 0.00	$ 1,400.00
HR Human Resources - Position Control	1	$ 1,400.00	$ 0.00	$ 1,400.00
HR Human Resources - Recruiting	1	$ 1,400.00	$ 0.00	$ 1,400.00
Utility Billing				
Utility Billing - Backflow	1	$ 1,200.00	$ 0.00	$ 1,200.00
Utility Billing - Balance Forward AR	1	$ 5,600.00	$ 0.00	$ 5,600.00
Utility Billing - Budget Billing	1	$ 3,600.00	$ 0.00	$ 3,600.00
Utility Billing - Consumption History up to 5 years	1	$ 2,000.00	$ 0.00	$ 2,000.00
Utility Billing - Option 2 Assessments	1	$ 1,200.00	$ 0.00	$ 1,200.00
Utility Billing - Service Orders	1	$ 2,300.00	$ 0.00	$ 2,300.00
Utility Billing - Services	1	$ 3,600.00	$ 0.00	$ 3,600.00
Utility Billing - Standard	1	$ 4,100.00	$ 0.00	$ 4,100.00
	TOTAL			**$ 43,000.00**

Tyler Annual Discount Detail (Excludes Optional Products)

Description	Annual Fee	Annual Fee Discount	Annual Fee Net
Financial Management			
Accounting	$ 17,346.00	$ 1,735.00	$ 15,611.00
Accounts Payable	$ 4,972.00	$ 497.00	$ 4,475.00
BMI Asset Track Interface	$ 1,288.00	$ 129.00	$ 1,159.00
Budgeting	$ 4,972.00	$ 497.00	$ 4,475.00
Capital Assets	$ 4,188.00	$ 419.00	$ 3,769.00
Cash Management	$ 2,859.00	$ 286.00	$ 2,573.00
Contract Management	$ 1,887.00	$ 189.00	$ 1,698.00

eProcurement	$ 2,859.00	$ 286.00	$ 2,573.00
Project & Grant Accounting	$ 3,353.00	$ 335.00	$ 3,018.00
Purchasing	$ 7,225.00	$ 723.00	$ 6,502.00
Human Resources Management			
Human Resources & Talent Management	$ 6,993.00	$ 699.00	$ 6,294.00
Payroll w/ESS	$ 8,401.00	$ 840.00	$ 7,561.00
Recruiting	$ 1,335.00	$ 134.00	$ 1,201.00
Risk Management	$ 1,603.00	$ 160.00	$ 1,443.00
Revenue Management			
Accounts Receivable	$ 3,658.00	$ 366.00	$ 3,292.00
Cashiering	$ 6,288.00	$ 629.00	$ 5,659.00
General Billing	$ 2,432.00	$ 243.00	$ 2,189.00
Civic Services			
Business Management Suite	$ 5,020.00	$ 500.00	$ 4,520.00
Civic Access - Business Management	$ 5,634.00	$ 563.00	$ 5,071.00
Civic Access - Community Development	$ 5,634.00	$ 563.00	$ 5,071.00
Community Development Suite	$ 21,084.00	$ 2,100.00	$ 18,984.00
e-Reviews	$ 9,188.00	$ 919.00	$ 8,269.00
Enterprise Permitting & Licensing Advanced Automation Bundle w Executive Insights	$ 14,439.00	$ 1,444.00	$ 12,995.00
Enterprise Permitting & Licensing Core Foundation Bundle	$ 1,912.00	$ 191.00	$ 1,721.00
Enterprise Service Requests	$ 2,888.00	$ 289.00	$ 2,599.00
My Civic	$ 8,000.00	$ 800.00	$ 7,200.00
Report Toolkit	$ 1,885.00	$ 189.00	$ 1,696.00
Workforce Mobile	$ 3,350.00	$ 340.00	$ 3,010.00
Enterprise Asset Management			
GIS	$ 6,214.00	$ 624.00	$ 5,590.00
Content Management			
Content Manager Core	$ 7,317.00	$ 732.00	$ 6,585.00
Data Insights			
Enterprise Analytics and Reporting w Executive Insights	$ 9,414.00	$ 941.00	$ 8,473.00
Additional			
Enterprise Forms Processing (including Common Form Set)	$ 3,584.00	$ 358.00	$ 3,226.00
Recurring Services			
Payroll Tax Table Updates	$ 1,000.00	$ 100.00	$ 900.00

TOTAL	**$ 188,222.00**	**$ 18,820.00**	**$ 169,402.00**

Comments

Tyler's quote contains estimates of the amount of services needed, based on our preliminary understanding of the scope, level of engagement, and timeline as defined in the Statement of Work (SOW) for your project. The actual amount of services required may vary, based on these factors.

Tyler's pricing is based on the scope of proposed products and services contracted from Tyler. Should portions of the scope of products or services be altered by the Client, Tyler reserves the right to adjust prices for the remaining scope accordingly.

Unless otherwise noted, prices submitted in the quote do not include travel expenses incurred in accordance with Tyler's then-current Business Travel Policy.

Tyler's prices do not include applicable local, city or federal sales, use excise, personal property or other similar taxes or duties, which you are responsible for determining and remitting. Installations are completed remotely but can be done onsite upon request at an additional cost.

In the event Client cancels services less than two (2) weeks in advance, Client is liable to Tyler for (i) all non-refundable expenses incurred by Tyler on Client's behalf; and (ii) daily fees associated with the cancelled services if Tyler is unable to re-assign its personnel.

The Implementation Hours included in this quote assume a work split effort of 70% Client and 30% Tyler.

Implementation Hours are scheduled and delivered in four (4) or eight (8) hour increments.

Tyler provides onsite training for a maximum of 12 people per class. In the event that more than 12 users wish to participate in a training class or more than one occurrence of a class is needed, Tyler will either provide additional days at then-current rates for training or Tyler will utilize a Train-the-Trainer approach whereby the client designated attendees of the initial training can thereafter train the remaining users.

As a new Tyler client, you are entitled to a 14-day or a 30-day trial of the Managed Detection and Response cybersecurity service. Please reference https://www.tylertech.com/services/tyler-detect for more information on the service and contact CybersecuritySales@tylertech.com to initiate the trial.

Tyler currently supports the following identity providers (IdP's) for use with Tyler back-office solutions: Microsoft Active Directory through Azure AD, ADFS or Okta AD agent, Google Cloud Identity, Okta, and Identity Automation RapidIdentity. Any requirement by you to use an IdP not supported by Tyler will require additional costs, available upon request.

EnerGov Business Management: Tyler leads and owns the "Assess and Define" and "Configuration" of 1 unique business transactions, 1 template business transactions, 1 geo-rules and 1 automation events. Configuration elements beyond this will be owned by the client.

EnerGov Community Development: Tyler leads and owns the "Assess and Define" and "Configuration" 2 unique business transactions, 2 template business transactions, 1 geo-rules and 1 automation events. Configuration elements beyond this will be owned by the client.

Tyler Content Manager SE includes up to 1TB of storage. Should additional storage be needed it may be purchased as needed at an annual fee of $5,000 per TB.

The SaaS fees for products that are not named users are based on 32 concurrent users. Should the number of concurrent users be exceeded, Tyler reserves the right to re-negotiate the SaaS fees based upon any resulting changes in the pricing categories.

Personnel Actions Forms Library includes: standard Personnel Action form - New and standard Personnel Action Form - Change.

Payroll library includes: standard PR check, standard direct deposit, standard vendor from payroll check, standard vendor from payroll direct deposit, W2, W2c, ACA 1095B, ACA 1095C and 1099 R.

Your rights, and the rights of any of your end users, to use Tyler's Data & Insights SaaS Services, or certain Tyler solutions which include Tyler's Data & Insights data platform, are subject to the Terms of Services, available at https://www.tylertech.com/terms/socrata-saas-services-terms-of-service. By signing this sales quotation, or accessing, installing, or using any of the Tyler solutions listed at the linked terms, you certify that you have reviewed, understand, and agree to said terms.

Financial library includes: standard A/P check, standard EFT/ACH, standard Purchase order, standard Contract, 1099M, 1099INT, 1099S, 1099NEC and 1099G.

PA760 Rugged Mobile Scanning Device with 2D Imager, Includes: AssetTrak ARS V3 (WiFi/Batch) Capital Asset Software MSD Users License, Enterprise ERP Asset Communicator Desktop Utility, 4G LTE ATT/TMobile, WLAN, Bluetooth 5.0, IP 67 Sealed, 6 ft Drop, GPS, Camera,

BMI Barcode Printer Kit - Includes - GoDEX 700i Thermal Transfer Printer, GoLabel Software with Enterprise ERP Inventory Module Integration, 1 ribbon & 1 roll of 3" by 1" paper labels.

BMI CollectIT V2 Inventory Mobile Scanning Device Kit: PA760 Rugged Mobile Scanning Device with 2D Imager, Includes: CollectIT V2 (Wi-Fi/Batch) Inventory Software MSD Users License, Enterprise ERP Inventory Communicator Desktop Utility, 4G LTE ATT/TMobile, WLAN, Bluetooth 5.0, IP 67 Sealed, 6 ft Drop, GPS, Camera, Andriod 9 OS, Pistol Grip, USB C Cable with power supply, 2.2 GHz Octa-core Processor, 4GB Ram, 64GB Rom with Standard 1 year manufacturer's depot warranty. Includes: 1 year phone support & software upgrades, up to 4 hours of remote install/training via

GoTo Meeting. Software support and upgrades renewal for CollectIT Inventory Software Included - $295.00ea will be billed by BMI Systems Group after the first year. NOTE: Requires the Enterprise ERP Web Services Inventory Module Interface.

Business Management Forms Library Includes: 1 Licensing - Business License, 1 Licensing - Business License Renewal, 1 Licensing - Business License Delinquent, 1 Licensing - Profession License, 1 Licensing - Profession License Renewal, 1 Licensing Profession License Delinquent.

Community Development Forms Library Includes: standard Permits - Building, standard Permits - Trade, standard Planning - Certificate, standard Permits - Occupancy/Completion, standard Code - Violation Notice.

General Billing library includes: standard invoice, standard statement, standard general billing receipt and standard miscellaneous receipt.

Standard Project Management responsibilities include project plan creation, initial stakeholder presentation, bi-weekly status calls, updating of project plan task statuses, and go-live planning activities.

In the event a self-hosted customer opts to enroll as a beneficiary under Tyler's source code escrow agreement, Tyler will provide the paperwork required for enrollment. That self-hosted customer will be billed, on an annual basis, directly by Tyler's escrow agent, and all such fees must be paid directly to that escrow agent. Rates for subsequent years are subject to change at the discretion of Tyler's escrow agent.

Your acquisition of clocks and/or clock maintenance is subject to the following terms: https://www.tylertech.com/terms/executime-clock-terms.

In the event Client acquires from Tyler any edition of Content Manager software other than Enterprise Edition, the license for Content Manager is restricted to use with Tyler applications only. If Client wishes to use Content Manager software with non-Tyler applications, Client must purchase or upgrade to Content Manager Enterprise Edition.

For the avoidance of doubt, Managed Detection & Response is a subscription service, not SaaS. Notwithstanding the foregoing language, payment of annual subscription fees for Managed Detection & Response commence on the availability of the service. Managed Detection & Response services will renew automatically for additional one (1) year terms, and subsequent subscription fees are due annually in advance on the anniversary of the availability date at our then-current rates. Pricing is based on client's current network size as defined by their entity size. Any material increases of network size may result in additional fees being assessed for the Managed Detection & Response service upon renewal. The quoted Managed Detection & Response amount does not include monitoring of student devices nor analysis of student network traffic. Tyler can quote an additional fee for these services.

Tyler's form library prices are based on the actual form quantities listed, and assume the forms will be provided according to the standard Enterprise ERP form template. Any forms in addition to the quoted amounts and types, including custom forms or forms that otherwise require custom

programming, are subject to an additional fee. Please also note that use of the Tyler Forms functionality requires the use of approved printers as well. You may contact Tyler's support team for the most current list of approved printers. Any forms included in this quote are based on the standard form templates provided. Custom forms, additional forms and any custom programming are subject to additional fees not included in this quote. The additional fees would be quoted at the time of request, generally during the implementation of the forms. Please note that the form solution provided requires the use of approved printers. You may contact Tyler's support team for the most current list of approved printers.

Utility Billing CIS includes the Graphing Agent. Utility billing library includes: standard Utility bill, standard UB receipt, standard UB delinquent notice, standard door hanger and standard final utility bill.

Sponsored By: Interim City Manager

RESOLUTION NO. 24-

A RESOLUTION OF THE CITY COMMISSION OF THE CITY OF OPA-LOCKA, FLORIDA, AUTHORIZING AN AMENDMENT TO THE AGREEMENT WITH BEEFREE, LLC D/B/A FREEBEE FOR ON-DEMAND AND FIXED-ROUTE RIDESHARE SERVICES WITHIN THE CITY, IN THE FORM ATTACHED HERETO; PROVIDING FOR ADOPTION OF REPRESENTATIONS; PROVIDING FOR AN EFFECTIVE DATE.

WHEREAS, pursuant to Resolution 24-099, the City of Opa-Locka ("City") accepted the proposal of Beefree, LLC d/b/a Freebee ("Freebee") for On-Demand and Fixed-Route Rideshare Services within the City and entered into an agreement with Freebee for same; and

WHEREAS, following the passage of Resolution 24-099, Freebee requested changes to the agreement form related to certain insurance provisions; and

WHEREAS, specifically, after several discussions, the parties have agreed to amend the agreement form wherein the City will not increase future insurance requirements absent an agreement between the parties and with all other provisions remaining same; and

WHEREAS, the City Commission finds that it is in the best interest of the City and its residents to amend the agreement with Freebee for Rideshare services, in the amendment form attached hereto as Exhibit "A".

NOW, THEREFORE, BE IT DULY RESOLVED BY THE CITY COMMISSION OF THE CITY OF OPA- LOCKA, FLORIDA:

SECTION 1. The recitals to the preamble herein are incorporated by reference.

SECTION 2. The City Commission of the City of Opa-Locka, Florida hereby accepts the amendment related to RFP No. 24-0205200, for On-Demand and Fixed-Route Rideshare Services within the City, in an agreement form attached hereto as Exhibit "A", in an amount not to exceed Two Hundred Eighty-Four Thousand Eight Hundred Dollars ($284,800.00) annually and in the form attached hereto as Exhibit "B".

SECTION 3. Sections of this Resolution may be renumbered or re-lettered and corrections of typographical errors which do not affect the intent may be authorized by the City Manager following review by the City Attorney and without need of public hearing, by filing a corrected copy of same with the City.

SECTION 4. This Resolution shall take effect upon adoption and is subject to the approval of the Governor or Governor's Designee

PASSED and **ADOPTED** this _____ day of _____, 2024.

_____
John Taylor, Mayor

ATTEST:

_____
Joanna Flores, City Clerk

APPROVED AS TO FORM AND LEGAL SUFFICIENCY:

_____
Burnadette Norris-Weeks, P.A.
City Attorney

Moved by: _____

Seconded by: _____

VOTE:

Commissioner Bass	_____
Commissioner Santiago	_____
Commissioner Ervin	_____
Vice Mayor Kelley	_____
Mayor Taylor	_____

City of Opa-locka
Agenda Cover Memo

Interim City Manager:	Sha'mecca Lawson			**CM Signature:**			
Commission Meeting Date:	12.11.2024		**Item Type:** *(Enter X in box)*	**Resolution**	**Ordinance**		**Other**
				X			
Fiscal Impact: *(Enter X in box)*	**Yes**	**No**	**Ordinance Reading:** *(Enter X in box)*		**1st Reading**		**2nd Reading**
		X	**Public Hearing:** *(Enter X in box)*		**Yes**	**No**	**Yes**	**No**
						X		X
Funding Source: *Account# :*	*(Enter Fund & Dept.)* Ex:		**Advertising Requirement:** *(Enter X in box)*		**Yes**		**No**
							x
Contract/P.O. Required: *(Enter X in box)*	**Yes**	**No**	**RFP/RFQ/Bid#:**		*N/A*		
	X						
Strategic Plan Related *(Enter X in box)*	**Yes**	**No**	**Strategic Plan Priority Area:** **Enhance Organizational** ☐ **Bus. & Economic Dev** ☐ **Public Safety** ☐ **Quality of Education** ☐ **Qual. of Life & City Image** ■ **Communication** ☐		**Strategic Plan Obj./Strategy:** *(list the specific objective/strategy this item will address)*		
	X						
Sponsor Name	Interim City Manager		**Department:**				

Short Title:

A RESOLUTION OF THE CITY COMMISSION OF THE CITY OF OPA-LOCKA AMENDING THE AGREEMENT WITH BEEFREE,LLC DBA FREEBEE FOR ON-DEMAND AND FIXED ROUTE RIDESHARE SERVICES.

Staff Summary:

Pursuant to Resolution No. 24-099 and in relation RFP No. 24-0205200, the City entered into an agreement with Beefree, LLC DBA Freebee for on-demand and fixed route services. The contractor has requested changes to the agreement. After extensive discussions, the City Attorney has found a resolve for the request and both parties desire to amend Article 5 entitled "Contractor's Liability Insurance" to remove the provision for an increase in insurance, as the City deems necessary. Upon approval, the Interim City Manager shall be authorized to execute the amendment.

Financial Impact: There is no financial impact.

Proposed Action:

Staff recommends the City Commission approves the amendment to the agreement with Beefree,LLC dba Freebee for the on-demand and fixed route rideshare services.

Attachment:

Agreement Amendment-Freebee

AMENDMENT TO THE AGREEMENT BETWEEN THE CITYOF OPA-LOCKA, FLORIDA, AND BEEFREE, LLC D/B/A FREEBEE FOR ON-DEMAND AND FIXED-ROUTE RIDESHARE SERVICES

THIS AMENDMENT entered into between the CITY OF OPA-LOCKA, a Florida municipal corporation, hereinafter "CITY", and BEEFREE, LLC D/B/A FREEBEE ("EXP"), a Florida Limited Liability Company, hereinafter "CONTRACTOR", hereby amends the Agreement between the parties approved June 26, 2024.

W I T N E S S E T H:

WHEREAS, the City of OPA-LOCKA "City" entered into an agreement with BEEFREE, LLC D/B/A FREEBEE for On-Demand and Fixed-Route Rideshare Services; and

WHEREAS, the Agreement between the parties was entered into pursuant to Resolution 24-099; and

WHEREAS, pursuant to Resolution No._____, the City Commission approved an amendment to the insurance terms; and

WHEREAS, the parties desire to specifically amend the Project Agreement, Article 5 entitled "Contractor's Liability Insurance" of the original agreement; and

WHEREAS, the Amendment will remove the provision for an increase in insurance, as the City deems necessary; and

WHEREAS, the City Commission desires to authorize the Interim City Manager to execute the Amendment to the Original Project Agreement between CITY and Beefree, LLC d/b/a Freebee, as set forth herein.

NOW THEREFORE, in consideration of the mutual terms, conditions, promises, covenants and payments hereinafter set forth in this Amendment, the parties hereby agree to amend follows:

1. The foregoing recitals are true and correct and incorporated herein by reference. Terms not defined herein shall have the same meaning as ascribed to them in the Project Agreement.

2. Page 4, Section 5.7 of the Agreement entitled "Contractor's Liability Insurance" is hereby amended and shall read:

Article 5 - CONTRACTOR'S LIABILITY INSURANCE

~~*5.7 The CITY reserves the right to require any other insurance coverage it deems necessary depending upon the exposures.*~~

The foregoing recitations are true and correct and are hereby incorporated by reference. All other provisions of the Agreement, except as modified herein, shall remain in full force and effect.

IN WITNESS OF THE FOREGOING, the parties have set their hands and seals the day and year first written above.

CITY OF OPA-LOCKA

ATTEST:

OPA-LOCKA CITY CLERK

BY:_____
City Clerk

By:_____
City Manager

APPROVED AS TO FORM AND LEGAL SUFFICIENCY

By:_____
City Attorney

CONSULTANT

Beefree, LLC d/b/a Freebee, a Florida corporation authorized to conductbusiness in the State of Florida

By: _____

Print Name: _____

Title: _____

WITNESS:

Print Name _____

Signature _____

STATE OF FLORIDA COUNTY

OF MIAMI-DADE

The forgoing instrument was acknowledged before me this_____day of _____, 2024 by [Name and Position]_____ _____, who is personally known to me or has produced identification and acknowledged that he did execute thisinstrument for the purpose stated herein.

_____

Notary Public, State of Florida

_____

Print Name

My Commission Expires:

AGREEMENT FOR ON DEMAND AND FIXED-ROUTE RIDESHARE SERVICES WITHIN THE CITY

THIS IS AN AGREEMENT, dated the___day of _____, 2024, between:
THE CITY OF OPA-LOCKA, a Florida municipal corporation,
hereinafter "CITY"

and

BEEFREE, LLC D/B/A FREEBEE,
a Florida Limited Liability Company, hereinafter "CONTRACTOR."

WITNESSETH:

In consideration of the mutual terms and conditions, promises, covenants, and payments hereinafter set forth, CITY and CONTRACTOR agree as follows:

ARTICLE 1
PREAMBLE

In order to establish the background, context and form of reference for this Agreement and to generally express the objectives, and intentions, of the respective parties herein, the following statements, representations and explanations shall be accepted as predicates for the undertakings and commitments included within the provisions which follow and may be relied upon by the parties as essential elements of the mutual considerations upon which this Agreement is based.

1.1 CITY is in need of a CONSULTANT for On-Demand and Fixed Route Rideshare Services within the city, pursuant to RFP No. 24-0205200.

1.2 CITY finds it necessary to seek a professional, full-service company for On-Demand and Fixed Route Rideshare Services.

1.3 CITY issued RFP 24-0205200 (“RFP”), seeking a professional company with the knowledge and ability to perform the services sought.

1.4 At its meeting of June 26, 2024, CITY selected CONTRACTOR to perform services needed that will provide consulting services relating to Request for Proposals (RFP) 24-0205200.

1.5 Contractor’s firm will be responsible for providing On-Demand and Fixed Route Rideshare Services within the City.

ARTICLE 2 SCOPE OF WORK

2.1 CONTRACTOR shall furnish all of the materials, tools, supplies, and labor necessary to perform all of the work described in the Request for Proposals RFP 24-0205200, a copy of which is attached hereto and specifically made a part of this Agreement as Exhibit "A", Scope of Services and the Scope of Services attached hereto as Exhibit “B” to include the Contractor’s response to the Request for Proposals.

2.2 CONTRACTOR shall abide by all specifications outlined in RFP 24-0205200.

2.3 CONTRACTOR hereby represents to CITY, with full knowledge that CITY is relying upon these representations when entering into this Agreement with CONTRACTOR, and that CONTRACTOR has the professional expertise, experience and manpower to perform the services to be provided by CONTRACTOR as set forth in CONTRACTOR’s response to RFP.

2.4 CONTRACTOR assumes professional and technical responsibility for performance of its services to be provided hereunder in accordance with applicable recognized professional standards and relevant Florida Statutes.

ARTICLE 3 COMMENCEMENT OF SERVICES

This Agreement shall be effective upon the date of execution of both parties. The CONTRACTOR shall commence work within 60 days of the effective date of this Agreement

ARTICLE 4 CONTRACT SUM

The CITY hereby agrees to pay CONTRACTOR for the faithful performance of this Agreement, for work completed in accordance with this Agreement and RFP 24-0205200. The payment for services pursuant to this Agreement shall not exceed Two Hundred Eighty-Four Thousand Eight Hundred Dollars ($284,800.00), per year.

4.1 Additional rideshare vehicles may be added to this Agreement, with the approval of the City Commission as demonstrated by an affirmative vote of the majority of the City Commission. Each additional rideshare vehicle (including Driver) shall increase this Agreement's annual cost by One Hundred Forty-Two Thousand, Four Hundred Dollars ($142,400.00).

4.2 The City agrees to permit advertising sales on vehicles. All generated revenues from said advertising shall be split equally between CONTRACTOR and CITY. The income generated shall be returned to the City to assist with the program's overall cost. CONTRACTOR agrees to provide any and all accounting documents related to advertising revenues and the overall program. CONTRACTOR agrees to provide an comprehensive plan for advertising to be approved by City within thirty (30) days from the execution of this Agreement.

4.3 CONTRACTOR shall be solely responsible for and shall provide for the payment of workers compensation insurance coverage and premium, and all other insurance pursuant to Article 5 below, withholding taxes, FICA, pension and profit-sharing contributions, retirement

contributions, if any, all remunerations; all labor contract compliance, and all other charges, fees, permits and expenses associated with the employment of such personnel provided by CONTRACTOR hereunder. CITY shall bear no responsibility for any such charge, fees, permits or expenses associated with the employment of such personnel by CONTRACTOR.

4.4 Payment to CONTRACTOR for all tasks and charges under this Agreement shall be based on the following conditions:

A. Disbursements. There are no reimbursable expenses associated with this Agreement.

B. Payment Schedule. Invoices received from CONTRACTOR pursuant to this Agreement will be reviewed by the appropriate financial staff. If services have been rendered in conformity with the Agreement, the invoice will be sent to the City of Opa-locka's Finance Department for payment and may need to be subsequently approved by the State of Florida.

C. Availability of Funds. CITY's performance and obligation to pay under this Agreement is contingent upon an annual appropriation from the CITY.

D. Final Invoice. In order for both parties herein to close their books and records, the CONTRACTOR will clearly state "final invoice" on the CONTRACTOR's final bill to the CITY.

4.5 The making and acceptance of the final payment shall constitute a waiver of all claims by the CITY. It shall also constitute a waiver of all claims by the CONTRACTOR, except those previously made and still unsettled.

ARTICLE 5
CONTRACTOR'S LIABILITY INSURANCE

5.1 The CONTRACTOR shall not commence work under this contract until it has obtained all insurance required under this paragraph and such insurance has been approved by the CITY nor shall the CONTRACTOR allow any Subcontractor to commence work on his sub-contract until all similar such insurance required of the subcontractor has been obtained and approved.

5.2 Certificates of insurance, reflecting evidence of the required insurance, shall be filed with the CITY prior to the commencement of the work. These Certificates shall contain a provision that coverage afforded under these policies will not be canceled or modified until at least ten days (10) prior written notice has been given to the CITY. Policies shall be issued by companies authorized to do business under the laws of the State of Florida.

5.3 Financial Ratings must be no less than "A" in the latest edition of "Bests Key Rating Guide", published by A.M. Best Guide.

5.4 Insurance shall be in force until all work required to be performed under the terms of the Contract is satisfactorily completed as evidenced by the formal acceptance by the CITY. In the event the insurance certificate provided indicates that the insurance shall terminate and lapse during the period of this contract, then in that event, the CONTRACTOR shall furnish, at least ten (10) days prior to the expiration of the date or modification of such insurance, a renewed certificate of insurance as proof that equal and like coverage for the balance of the period of the contract and extension thereunder is in effect. The CONTRACTOR shall not continue to work

pursuant to this contract unless all required insurance remains in full force and effect.

5.5 Commercial General Liability Insurance Covering premises-operations, product-completed operations, independent contractors, and contractual liability. Limits: Combined single limit bodily injury/property damage $1,000,000. This coverage should include, but not limited to:

a. Coverage for the liability assumed by the contractor under the indemnity provision of the contract.
b. Coverage for Premises/Operations
c. Personal and Advertising Injury Liability
d. Products/Completed Operations
e. Broad Form Contractual Liability

Covering all owned, hired, and non-owned automobile equipment, and other vehicles used by the successful bidder in the performance of the work with the following limits of liability:

- Limits: Combined single limit bodily injury/property damage $1,000,000
- Professional Liability (Errors & Omissions)
- Limits: $2,000,000 per occurrence

This coverage should include, but not limited to:

a. Coverage for the liability assumed by the contractor under the indemnity provision of the contract.
b. Coverage for Premises/Operations
c. Products/Completed Operations
d. Broad Form Contractual Liability

Automobile Liability Insurance covering all owned, hired and non-owned automobile equipment, and other vehicles used by the successful bidder in the performance of the work with the following limits of liability:

- Limits: Bodily injury $500,000 each person, $500,000 each occurrence
- Property damage $100,000 each occurrence
- Professional Liability (Errors & Omissions)
- Limits: $2,000,000 per occurrence

- A copy of ANY current Certificate of Insurance should be included with your proposal.
- If you are the successful bidder, you will be required to provide a certificate naming the City as an "additional insured" for General Liability.
- Certificate holder should be addressed as follows: City of Opa-locka 780 Fisherman Street, 4th Floor Opa-locka, FL 33054

5.6 The CONTRACTOR shall hold the CITY, the City of Opa-locka their agents, and employees, harmless on account of claims for damages to persons, property or premises arising out of the operations to complete this Agreement and name the CITY as an additional insured under their policy.

5.7 The CITY reserves the right to require any other insurance coverage it deems necessary depending upon the exposures.

ARTICLE 6
PROTECTION OF PROPERTY

6.1 At all times during the performance of this Contract, the CONTRACTOR shall protect the CITY's property and properties adjoining the Project site from all damage whatsoever on account of the work being carried on pursuant to this Agreement.

ARTICLE 7
CONTRACTOR'S INDEMNIFICATION

7.1 The CONTRACTOR agrees to release the CITY from and against any and all liability and responsibility in connection with the above-mentioned matters. The CONTRACTOR further agrees not to sue or seek any money or damages from CITY in connection with the above-mentioned matters, except in the event that the CITY fails to pay to CONTRACTOR the fees and costs as provided for in Article 4 herein.

7.2 The CONTRACTOR agrees to indemnify and hold harmless the CITY, its trustees, elected and appointed officers, agents, servants and employees, from and against any and all claims, demands, or causes of action of whatsoever kind or nature, and the resulting losses, costs, expenses, reasonable attorneys' fees, liabilities, damages, orders, judgments, or decrees, sustained by the CITY or any third party arising out of, or by reason of, or resulting from the CONTRACTOR's negligent acts, errors, or omissions.

7.3 If a court of competent jurisdiction holds the CITY liable for certain tortious acts of its agents, officers, or employees, such liability shall be limited to the extent and limit provided in 768.28, Florida Statutes. This provision shall not be construed as a waiver of any right or defense that the CITY may possess. The CITY specifically reserves all rights as against any and all claims that may be brought.

ARTICLE 8
INDEPENDENT CONTRACTOR

8.1 This Agreement does not create an employee/employer relationship between the parties. It is the intent of the parties that the CONTRACTOR is an independent contractor under this Agreement and not the CITY's employee for all purposes, including but not limited to, the application of the Fair Labor Standards Act minimum wage and overtime payments, Federal Insurance Contribution Act, the Social Security Act, the Federal Unemployment Tax Act, the provisions of the Internal Revenue Code, the State Workers Compensation Act, and the State unemployment insurance law. The CONTRACTOR shall retain sole and absolute discretion in the judgment of the manner and means of carrying out the CONTRACTOR's activities and responsibilities hereunder provided. This Agreement shall not be construed as creating any joint employment relationship between the CONTRACTOR and the CITY and the CITY will not be liable for any obligation incurred by CONTRACTOR, including but not limited to unpaid minimum wages and/or overtime premiums.

ARTICLE 9
CONTRACT BOND

9.1 The bond requirements for this Agreement shall be as follows:

NOT APPLICABLE

ARTICLE 10
CHANGES TO SCOPE OF WORK AND ADDITIONAL WORK

10.1 CITY or CONTRACTOR may request changes that would increase, decrease or otherwise modify the Scope of Services/Basic Services to be provided under this Agreement as described in Article 2 of this Agreement. Such changes or additional services must be in accordance with a written amendment, executed by the parties hereto, with the same formality and with equality and dignity prior to any deviation from the terms of this Agreement, including the initiation of any additional or extra work. Each amendment shall at a minimum include the following information on each project:

PROJECT NAME
PROJECT DESCRIPTION
ESTIMATED PROJECT COST
ESTIMATED COST FOR ADDITION OR CHANGE TO PROJECT CONTRACT
ESTIMATED PROJECT COMPLETION DATE

10.2 In no event will the CONTRACTOR be compensated for any work which has not been described in a separate written agreement executed by the parties hereto.

ARTICLE 11
TERM AND TERMINATION

11.1 The term of the contract is three (3) years with two one (1) year renewals, subject to negotiation of terms with the contractor and the concurrence of the City of Opa-locka City Commission and availability of annual appropriation. The contract term shall not exceeding five (5) years.

11.2 This Agreement may be terminated in whole or in part by the City at any time and for any reason in accordance with this clause whenever the City shall determine that such termination is in the best interest of the City. Any such termination shall be affected by the delivery to the contractor of a Notice of Termination specifying the extent to which performance shall be terminated and the date upon which termination becomes effective. The City shall allow the Consultant a reasonable period of time in which to cure a defect in performance or non-performance. In such case, the City's written notice of termination to the Consultant shall state the time period in which cure is permitted and other appropriate conditions, if applicable. An equitable adjustment in the contract price shall be made for the completed service, but no amount shall be allowed for anticipated profit on unperformed services.

ARTICLE 12
CONTRACT DOCUMENTS

2.5 12.1 CONTRACTOR and CITY hereby agree that the following Specification and Contract Documents, which are attached hereto and made a part thereof, are fully incorporated herein and made a part of this Agreement, as if written herein word for word: this Agreement; RFP 24-0205200, Exhibit "A", and the Scope of Services attached hereto as Exhibit "B" to include the Contractor's response to the Request for Proposals.

ARTICLE 13
MISCELLANEOUS

13.1 Legal Representation. It is acknowledged that each party to this Agreement had the opportunity to be represented by counsel in the preparation of this Agreement and, accordingly, the rule that a contract shall be interpreted strictly against the party preparing same shall not apply due to the joint contribution of both parties.

13.2 Assignments. This Agreement, or any interest herein, shall not be assigned, transferred, or otherwise encumbered, under any circumstances, by CONTRACTOR without the prior written consent of CITY. For purposes of this Agreement, any change of ownership of CONTRACTOR shall constitute an assignment which requires CITY approval. However, this Agreement shall run to the CITY and its successors and assigns.

13.3 Records. CONTRACTOR shall keep books and records and require any and all subcontractors to keep books and records as may be necessary in order to record complete and correct entries as to personnel hours charged to this engagement, and any expenses for which CONTRACTOR expects to be reimbursed, if applicable. Such books and records shall be available at all reasonable times for examination and audit by CITY and shall be kept for a period of three (3) years after the completion of all work to be performed pursuant to this Agreement. Incomplete or incorrect entries in such books and records will be grounds for disallowance by CITY of any fees or expenses based upon such entries.

CITY is a public agency subject to Chapter 119, Florida Statutes. To the extent CONTRACTOR is acting on behalf of CITY pursuant to Section 119.0701, Florida Statutes, CONTRACTOR shall:

a. Keep and maintain public records that ordinarily and necessarily would be required to be kept and maintained by CITY were CITY performing the services under this agreement;

b. Provide the public with access to such public records on the same terms and conditions that the County would provide the records and at a cost that does not exceed that provided in Chapter 119, Florida Statutes, or as otherwise provided by law;

c. Ensure that public records that are exempt or that are confidential and exempt from public record requirements are not disclosed except as authorized by law; and

d. Meet all requirements for retaining public records and transfer to CITY, at no cost, all public records in possession of the CONTRACTOR upon termination of this Agreement and destroy any duplicate public records that are exempt or confidential and exempt. All

records stored electronically must be provided to the CITY.

13.4 Ownership of Documents. Reports, surveys, plans, studies and other data provided in connection with this Agreement are and shall remain the property of CITY.

13.5 No Contingent Fees. CONTRACTOR warrants that it has not employed or retained any company or person, other than a bona fide employee working solely for the CONTRACTOR, to solicit or secure this Agreement, and that it has not paid or agreed to pay any person, company, corporation, individual or firm, other than a bona fide employee working solely for CONTRACTOR, any fee, commission, percentage, gift, or other consideration contingent upon or resulting from the award or making of this Agreement. For the breach or violation of this provision, the CITY shall have the right to terminate the Agreement without liability at its discretion, to deduct from the contract price, or otherwise recover the full amount of such fee, commission, percentage, gift or consideration.

13.6 Notice. Whenever any party desires to give notice unto any other party, it must be given by written notice, sent by registered United States mail or national delivery service with verified confirmation. If by mail, with return receipt requested, addressed to the party for whom it is intended and the remaining party, at the places last specified, and the places for giving of notice shall remain such until they shall have been changed by written notice in compliance with the provisions of this section. For the present, the CONTRACTOR and the CITY designate the following as the respective places for giving of notice:

CITY:	Darvin Williams, City Manager City of Opa-locka Municipal Complex 780 Fisherman Street, 4TH Floor Opa-locka, FL 33054
Copy To:	Burnadette Norris-Weeks, City Attorney Burnadette Norris-Weeks, P.A. 401 North Avenue of the Arts Fort Lauderdale, Florida 33311
Contractor:	Jason Spiegel BEEFREE, LLC D/B/A FREEBEE 373 NE 61st St Miami Fl, 33137
Copy To:	Jason Spiegel, Registered Agent BEEFREE, LLC D/B/A FREEBEE 371 NE 61st St MIAMI, FL 33137

13.7 Binding Authority. Each person signing this Agreement on behalf of either party individually warrants that he or she has full legal power to execute this Agreement on behalf of the party for whom he or she is signing, and to bind and obligate such party with respect to all provisions contained in this Agreement.

13.8 Exhibits. Each Exhibit referred to in this Agreement forms an essential part of this Agreement. The exhibits if not physically attached should be treated as part of this Agreement and are incorporated herein by reference.

13.9 Headings. Headings herein are for convenience of reference only and shall not be considered on any interpretation of this Agreement.

13.10 Severability. If any provision of this Agreement or application thereof to any person or situation shall, to any extent, be held invalid or unenforceable, the remainder of this Agreement, and the application of such provisions to persons or situations other than those as to which it shall have been held invalid or unenforceable shall not be affected thereby, and shall continue in full force and effect, and be enforced to the fullest extent permitted by law.

13.11 Governing Law. This Agreement shall be governed by the laws of the State of Florida with venue lying in Miami-Dade County, Florida.

13.12 Disputes. Any claim, objection, or dispute arising out of the terms of this Agreement shall be litigated in the Eleventh Judicial Circuit Court in and for Miami-Dade County.

13.13 Attorney's Fees. To the extent authorized by law, in the event that either party brings suit for enforcement of this Agreement, the prevailing party shall be entitled to attorney's fees and court costs in addition to any other remedy afforded by law.

13.14 Extent of Agreement. This Agreement together with Contract Documents, attached as an Exhibit hereto, as amended herein above represents the entire and integrated agreement between the CITY and the CONTRACTOR and supersedes all prior negotiations, representations or agreements, either written or oral.

13.15 Waiver. Failure of the CITY to insist upon strict performance of any provision or condition of this Agreement, or to execute any right therein contained, shall not be construed as a waiver or relinquishment for the future of any such provision, condition, or right, but the same shall remain in full force and effect.

13.16 E-Verify. In accordance with Florida Statutes §448.095, the Contractor, prior to commencement of services or payment by the City, will provide to the City proof of participation/enrollment in the E-Verify system of the Department of Homeland Security. Evidence of participation/enrollment will be a printout of the Company's "Company Profile" page from the E-verify system. Failure to be continually enrolled and participating in the E-Verify program will be a breach of contract which will be grounds for immediate termination of the contract by the City. The Contractor will not hire any employee who has not been vetted through E-Verify. The Contractor may not subcontract any work for the City to any subcontractor that has not provided an affidavit stating that the subcontractor does not employ, contract with or subcontract with an unauthorized alien.

13.17 Scrutinized Companies. Contractor hereby certifies that it: a) has not been placed on the Scrutinized Companies that Boycott Israel List, nor is engaged in a boycott of Israel; b) has not been placed on the Scrutinized Companies with Activities in Sudan List nor the Scrutinized Companies with Activities in the Iran Petroleum Energy Sector List; and c) has not been engaged in business operations in Cuba or Syria. If City determined that Contractor has falsely certified facts under this paragraph or if Contractor is found to have been placed on the Scrutinized Companies Lists or is engaged in a boycott of Israel after the execution of this Agreement, City will have all rights and remedies to terminate this Agreement consistent with Section 287.135, Florida Statutes, as amended. The City reserves all rights to waive the certifications required by this paragraph on a case-by-case exception basis pursuant to Section 287.135, Florida Statutes, as amended. City reserves all rights to waive the certifications required by this paragraph on a case-by-case exception basis pursuant to

Section 287.135, Florida Statutes, as amended.

Contractor shall not enter into a contract with an entity which would give access to an individual's personal identifying information if: (1) the entity is owned by the government of a foreign country of concern; (2) the government of a foreign country of concern has a controlling interest in the entity; or (3) the entity is organized under the laws or has its principal place of business in a foreign country of concern Section 287.138(2) (a)-(c), Fla. Stat. (2023), under Chapter 2023-33, Laws of Florida.

IN WITNESS OF THE FOREGOING, the parties have set their hands and seals the day and year first written above.

City of Opa-locka

ATTEST:

BY: _____

Joanna Flores
City Clerk

Darvin Williams
City Manager

APPROVED AS TO FORM
AND LEGAL SUFFICIENCY:

_____
Burnadette Norris-Weeks, City Attorney

CONTRACTOR

WITNESSES:

_____ BY:_____

Name: _____

Position: _____

_____

STATE OF FLORIDA)
) SS:
COUNTY OF MIAMI-DADE)

BEFORE ME, an officer duly authorized by law to administer oaths and take acknowledgments, personally appeared _____ as _____, of a Florida corporation, and acknowledged executed the foregoing Agreement as the proper official of_____, for the use and purposes mentioned in it and affixed the official seal of the corporation, and that the instrument is the act and deed of that corporation.

IN WITNESS OF THE FOREGOING, I have set my hand and official seal at in the State and County aforesaid on this_____day of_____, 2024.

_____
NOTARY PUBLIC

My Commission Expires:

Sponsored by: City Manager

RESOLUTION NO. 2024-

A RESOLUTION OF THE CITY COMMISSION OF THE CITY OF OPA-LOCKA, FLORIDA, ADOPTING THE CITY OF OPA-LOCKA'S 2025 LEGISLATIVE PRIORITY LIST, ATTACHED HERETO AS COMPOSITE EXHIBIT "A"; AUTHORIZING THE CITY MANAGER TO TAKE NECESSARY ACTION TO CARRY OUT THE AIMS OF THIS RESOLUTION; PROVIDING FOR ADOPTION OF REPRESENTATIONS; PROVIDING FOR AN EFFECTIVE DATE

WHEREAS, annually, the City Commission of the City of Opa-Locka prioritizes funding requests to be included in the State budget through the appropriation process; and

WHEREAS, City of Opa-Locka ("City") representatives at the State level in both chambers, the House and Senate, sponsor projects of interest to the municipal governments they represent; and

WHEREAS, the Interim City Manager has recommended a state legislative priority list for the 2025 legislative session and is seeking its approval from the City Commission; and

WHEREAS, upon adoption, the Interim City Manager shall be authorized to take all necessary action to execute this resolution; and

WHEREAS, the City Commission of the City of Opa-Locka, Florida desires to adopt the recommended state legislative priority list.

NOW, THEREFORE, BE IT RESOLVED BY THE CITY COMMISSION OF THE CITY OF OPA-LOCKA, FLORIDA, THAT:

Section 1. Adoption of Representations. The foregoing "Whereas" clauses are hereby ratified and confirmed as being true and the same are hereby made a specific part of this Resolution.

Section 2. Adoption of 2025 State Legislative Priority List. The City of Opa-Locka's 2024 State Legislative Priority List, attached hereto as Composite Exhibit "A", is hereby adopted. The Interim City Manager is authorized to take all action necessary to implement the purpose of this Resolution, including transmittal to the proper agencies.

Sponsored by: City Manager

Section 3. **Scrivener's Errors**. Sections of this Resolution may be renumbered or re-lettered and corrections of typographical errors which do not affect the intent may be authorized by the City Manager, following review by the City Attorney and without need of public hearing, by filing a corrected copy of same with the City.

Section 4. **Effective Date.** This Resolution shall take effect immediately upon adoption and is subject to the approval of the Governor or his designee.

PASSED and **ADOPTED** this _____ day of _____, 2024.

_____
John Taylor, Mayor

ATTEST:

_____
Joanna Flores, City Clerk

APPROVED AS TO FORM
AND LEGAL SUFFICIENCY:

_____
Burnadette Norris-Weeks, P.A.
City Attorney

Moved by: _____

Seconded by: _____

VOTE:
Commissioner Bass _____
Commissioner Santiago _____
Commissioner Ervin _____
Vice Mayor Kelley _____
Mayor Taylor _____

City of Opa-locka
Agenda Cover Memo

Interim City Manager:	Sha'mecca Lawson			**ICM Signature**				
Commission Meeting Date:	12.11.2024		**Item Type:** *(Enter X in box)*	**Resolution**	**Ordinance**		**Other**	
				X				
Fiscal Impact: *(Enter X in box)*	**Yes**	**No**	**Resolution Reading:** *(Enter X in box)*		**1st Reading**		**2nd Reading**	
	X		**Public Hearing:** *(Enter X in box)*		**Yes**	**No**	**Yes**	**No**
Funding Source: *Account#:*	*(Enter Fund & Dept)* Ex: N/A See Financial Impact section below		**Advertising Requirement:** *(Enter X in box)*		**Yes**		**No**	
ILA Required: *(Enter X in box)*	**Yes**	**No**	**RFP/RFQ/Bid#:**					
	X							
Strategic Plan Related *(Enter X in box)*	**Yes**	**No**	**Strategic Plan Priority Area:** **Enhance Organizational** ■ **Bus. & Economic Dev** ■ **Public Safety** ■ **Quality of Education** □ **Qual. of Life & City Image** ■ **Communication** □		**Strategic Plan Obj./Strategy:** *(list the specific objective/strategy this item will address)*			
	X							
Sponsor Name	Interim City Manager		**Department:**		City Manager			

Short Title:

A RESOLUTION OF THE CITY COMMISSION OF THE CITY OF OPA-LOCKA ADOPTING THE CITY'S 2025 LEGISLATIVE PRIORITY LIST AND FURTHER AUTHORIZING THE INTERIM CITY MANAGER TO TAKE ALL NECESSARY ACTIONS TO EXECUTE THIS RESOLUTION.

Staff Summary:

Annually, the City Commission prioritizes funding requests to be included in the State budget through the appropriation process. City representatives at the State level in both chambers, the House and Senate, sponsor projects of interest to the municipal governments they represent. City Administration has formalized the funding prioritization and is seeking approval. Upon adoption, the Interim City Manager shall be authorized to take all necessary action to execute this resolution.

Financial Impact: This initiative enhances the City's ability to secure specialized funding opportunities that may be unavailable. Access to these funds could improve the City's financial standing by alleviating the burden on capital expenditures. However, in cases where the funding is structured as a match-grant, the City may be obligated to cover a percentage of the project's costs as a matching requirement. This co-funding obligation could strain the City's budget, potentially requiring reallocation of resources or additional financial planning to mitigate the impact.

Proposed Action:

Staff recommend the City Commission adopts the 2025 legislative priority list and authorizes the Interim City Manager take all necessary step for execution.

Attachment:

Legislative Priority List

City of Opa-locka

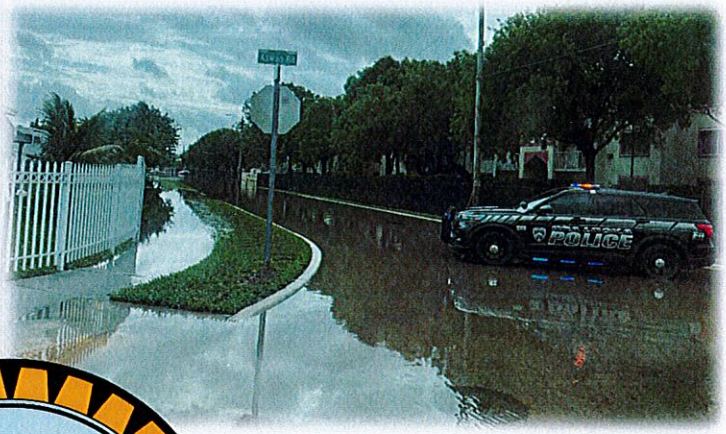

CITY OF OPA-LOCKA FLORIDA EST. 1926

State Legislative Request

2024 – 2025

Sha'mecca Lawson, Interim City Manager

CITY OF OPA-LOCKA

STATE LEGISLATIVE PRIORITY REQUEST

2024 - 2025

City Of Opa-locka 780 Fisherman Street, Opa-locka, FL 33054

CITY OF OPA-LOCKA

STATE LEGISLATIVE PRIORITY LIST

Stormwater and Roadway Improvements	**$2,719,900.00**
Drinking Water Distribution Improvements	**$2,816,000.00**
Wastewater System Improvements	**$2,024,000.00**
Pump Stations Upgrade and Rehabilitation	**$3,000,000.00**
Finance Department ERP System Replacement	**$1,571,287.00**

City of Opa-locka

2025 State Legislative Request Package

Background Information

The City of Opa-locka originated as a "Moorish" real estate development community. Founded in 1925 by Glen H. Curtiss, a pioneer aviator, airplane manufacturer and real estate developer, the City was incorporated a year later. The name Opa-locka, derived from the Seminole Indian word Opatishawonkalocka, means "big island covered with many trees in the swamp". The city's design was based on the *Arabian Nights* theme with streets that have names like Sabur Lane, Sultan Avenue, Ali Baba Avenue and Sesame Street. Curtiss and his architect Bernhardt Mueller built 105 buildings in the Moorish theme. Opa-locka has the largest collection of Moorish Revival architecture in the Western hemisphere. Twenty buildings are currently listed on the National Register of Historic Places. The original town included the airport, where Curtiss had a flight school; and a Navy base that operated until the 1950's (some of the original barracks still stand). Opa-locka airport is where Amelia Earhart started her historic attempt to circumnavigate the world in 1937. Today, Opa-locka houses a combination of industrial, residential and commercial properties as well as an airport, the old Historic City Hall depicted by its Moorish Architecture and stature is undergoing totally rehabilitation. Once renovated, Old Historic City Hall will prove be the anchor to future infrastructure stakeholder projects.

The City covers 4.2 square miles and is located in the northeast region of Miami-Dade County. More than 16,953 people and 1,600 businesses reside within its city boundaries; In recent years there have been proposals for housing, industrial, and commercial developments earmarked for, in and around the Opa-locka community. However, the majority of this planned growth is contingent upon available funding dollars to improve our city-wide water quality systems which have been in a state of disrepair while continuing to decay.

Currently the City's storm water, drinking water and wastewater distribution and collection systems are aged. The deteriorated clay gravity pipe city-wide is becoming a potential health risk. Due to the high levels of water quality issues throughout the City and the numerous pockets of Brownfield possible contaminated sites and vacant properties with

environmental concerns, there is a potential to contaminate the ground water table, and may cross-contaminate the public water supply. The continuous outpour of raw sewage backs up and contained toxins, pathogens, heavy metals, salts, oils, phenols, as well as

other contaminants that are normally found in residential and commercial sewage systems both service and underground.

If our drinking water, sewer and wastewater systems are not brought up to "Water Quality Standards" and our canals, lift stations and pump stations are not rehabilitated, it will be catastrophic to the city as it will impose **health risks** to the residents and businesses.

Opa-locka officials realize that city growth is imminent. In an effort to design a roadmap that sets the direction for Opa-locka's future, elected officials, city department heads and senior managers are in the final stages of crystallizing the city's Strategic Plan. The plan serves as a guide in decision-making and resource allocation and serves to enable Opa-locka to advance in providing an excellent and sustainable quality of life. The vision to progress reaches further. City officials are reviewing best practices for land use, transportation, public policy, and stimulating growth through its Comprehensive Plan. Opa-locka is moving forward.

In this Legislative Request for the 2025 Session, the City of Opa-locka identifies its current Legislative Priorities and provides general information for each request. **The City's primary goal in seeking state funding is to improve all of our Water Quality Improvement Projects, Quality of Life Initiatives, which will allow us to stimulate economic development and enhance quality of life through stronger infrastructure.**

The 2025 Legislative Request for the City of Opa-locka presents a strategic series of projects aimed at addressing critical infrastructure needs, enhancing public safety, and fostering long-term fiscal and environmental health for the community. These initiatives focus on vital areas including drinking water distribution, wastewater management, flood mitigation, and administrative efficiency improvements through an updated ERP system. Designed with a commitment to protect the community's most vulnerable populations—elderly residents, students, and low-to-moderate-income households—the outlined projects seek legislative support to address current challenges and build a robust foundation for the city's future.

CITY OF OPA-LOCKA BOUNDARY MAP

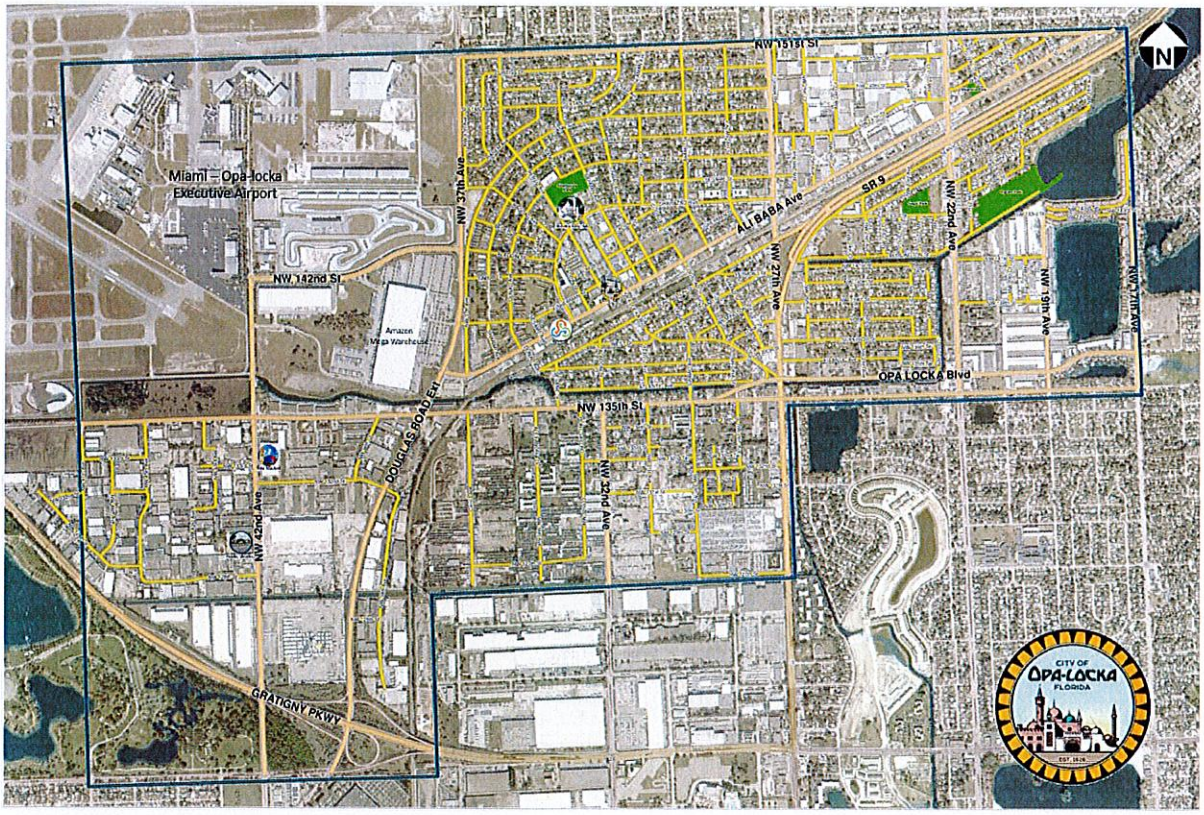

Table of Contents

Background Information 3

Summary of Key Legislative Requests: 7

Drinking Water Distribution System Improvement Project for the City of Opa-locka 8

Wastewater System Improvements Project 9

A. SERVICE AREA GRAVITY SYSTEM REPAIRS 9

B. Pump Stations Upgrade and Rehabilitation Projects 9

STORMWATER AND ROADWAY IMPROVEMENT PROJECTS 12

A. INTRODUCTION 12

B. EXISTING CONDITIONS 12

1.1. NW 132nd Street and Aswan Rd 13

City of Opa-locka ERP System Replacement 16

Summary of Key Legislative Requests:

1. **Drinking Water Distribution System Improvement**
    - Objective: Modernize the City's water infrastructure by reducing water loss, improving flow and quality, and ensuring regulatory compliance through pipe replacements and system upgrades.
2. **Wastewater System Improvements**
    - Objective: Rehabilitate the aging wastewater infrastructure to reduce inflow and infiltration, lower environmental risks, and enhance compliance with regulatory standards.
3. **Pump Station 11C and Pump Station 12 Upgrades**
    - Objective: Modernize these pump stations to ensure reliable wastewater management during adverse weather, reducing public health risks from sewage overflows and enhancing operational resilience.
4. **Flood Mitigation Projects for NW 132nd Street**
    - Objective: Implement closed drainage systems with emergency overflow to mitigate severe flooding, protect public safety, and improve environmental health in these flood-prone areas.
5. **ERP System Modernization for Finance Department**
    - Objective: Deploy a new ERP system to streamline financial reporting, operational management, and departmental coordination across finance, HR, and potential utility billing functions.

These project proposals detail the scope, system analysis, and anticipated community benefits, underscoring the City of Opa-locka's commitment to creating a safer, healthier, and more resilient environment for its residents. Legislative funding for these initiatives is essential to support the city's strategic vision and meet current and future infrastructure demands.

Drinking Water Distribution System Improvement Project for the City of Opa-locka

The City of Opa-locka requests $2.8 million in legislative funding to upgrade its aging drinking water distribution system, improving safety, reliability, and efficiency for residents. The system, spanning over 471,000 feet of pipeline, includes outdated asbestos cement pipes, frequent leaks, and low-capacity narrow pipes that compromise water flow and fire suppression capabilities. The project will replace deteriorating pipes, improve water pressure, add fire hydrants, and remove dead-ends to enhance water quality and system resilience. Benefits include reduced water loss, improved public health, lower maintenance costs, and compliance with modern safety standards, creating a sustainable solution for the city's water needs.

This project will significantly improve water quality, safety, and reliability for the City of Opa-locka and surrounding serviced areas. By modernizing the infrastructure, the city will achieve:

Project Cost: $2,816,000.00

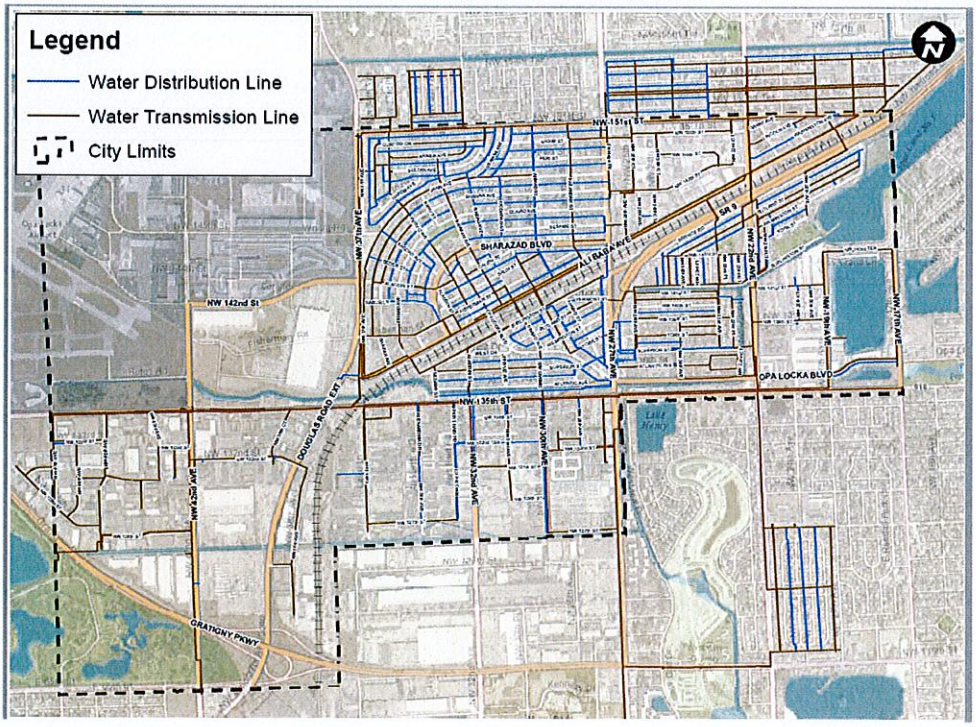

Wastewater System Improvements Project

The City of Opa-locka's sanitary sewer collection is comprised of approximately 183,000 linear feet of gravity collection piping with maintenance access manhole structures interspaced throughout the system. The transmission infrastructure comprises approximately 42,300 linear feet of piping and 20 lift stations.

A. SERVICE AREA GRAVITY SYSTEM REPAIRS

The existing system, which serves various city entities, includes 183,000 feet of gravity-fed sewer pipes and 42,300 feet of transmission piping with 20 lift stations. Frequent maintenance needs and operational inefficiencies highlight the need for structural upgrades. The project will primarily use cured-in-place pipe (CIPP) technology, a minimally invasive method that lines old pipes with a new, corrosion-resistant interior, reducing environmental risks and inflow issues. Benefits include enhanced pipe integrity, reduced infiltration, minimal surface disruption, extended system life, and regulatory compliance.

Project Cost: $2,024,000.00

B. Pump Stations Upgrade and Rehabilitation Projects

Pump Station PS-11C Upgrade and Rehabilitation Project

The City of Opa-locka seeks $1.5 million in legislative funding to upgrade Pump Station PS-11C, the master station handling wastewater from eight satellite stations. The outdated equipment at PS-11C has failed multiple times during severe weather, risking sewage overflows and posing public health hazards. The project includes installing three high-efficiency pumps to handle peak loads, modernizing electrical systems, and enhancing backup power for reliable operation in extreme conditions. Structural improvements will protect against flooding, and upgrades will increase system resilience, reduce environmental risks, and lower long-term costs. This funding will ensure reliable wastewater management for the community.

Project Cost: $1,500,000.00

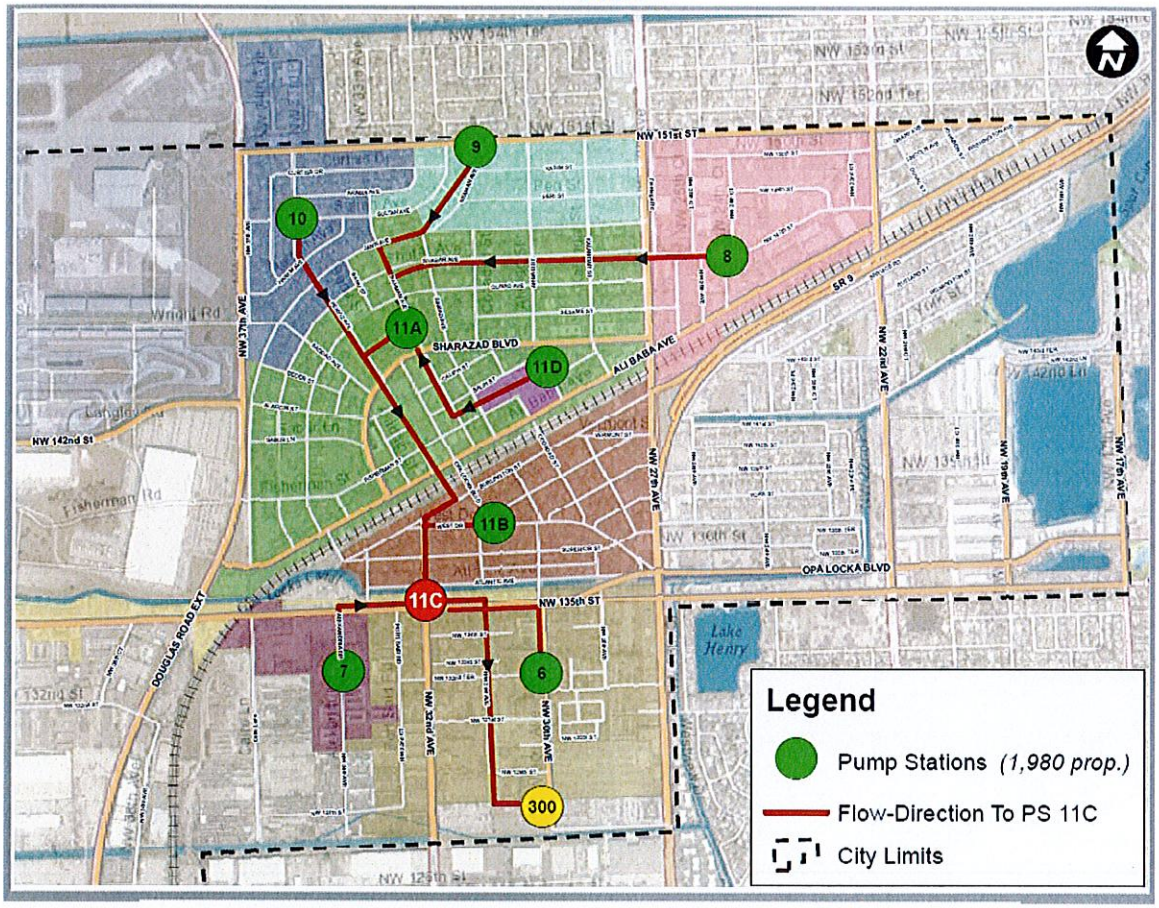

Pump Station 12 Rehabilitation Project

The City of Opa-locka seeks $1.5 million in legislative funding to modernize Pump Station 12, a crucial part of its wastewater system. The project will replace the existing station with a compact, submersible lift station, featuring a reinforced wet well, valve vault, elevated control panel, and upgraded piping to meet current flood and environmental standards. These improvements will enhance resilience, reduce maintenance needs, and support future sewer expansion. The funding will enable a sustainable solution that improves reliability, protects public health and the environment, and reduces long-term costs.

Project Cost: $1,500,000.00

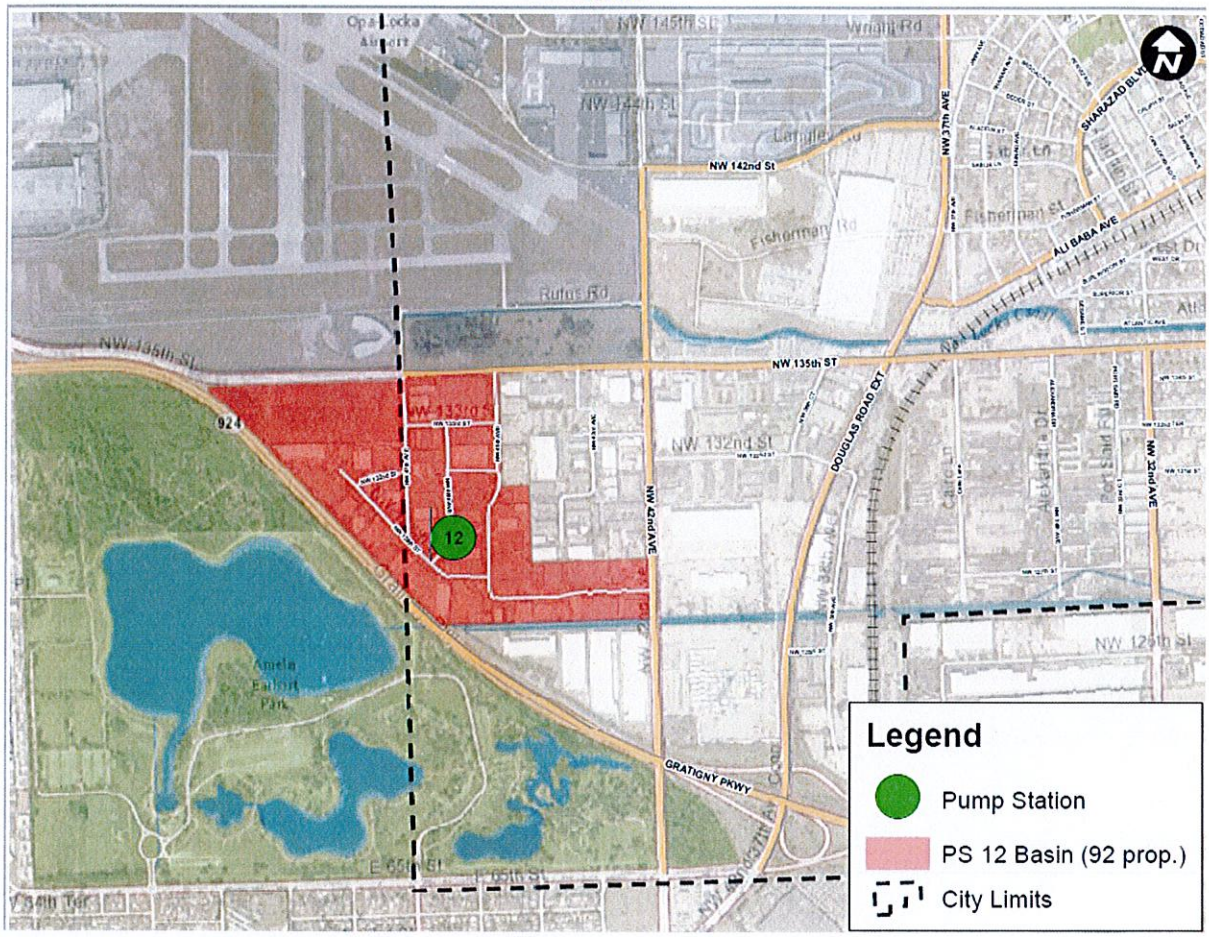
Opa-locka Airport
NW 145th St
Wright Rd
NW 144th St
NW 142nd St
NW 37th AVE
SHARAZAD BLVD
Fisherman Rd
ALI BABA AVE
Rutos Rd
NW 138th St
NW 135th ST
924
NW 133rd St
NW 132nd St
DOUGLAS ROAD EXT
NW 32nd AVE
12
NW 42nd AVE
Amelia Earhart Park
NW 129th St
GRATIGNY PKWY
E 65th St
Legend
Pump Station
PS 12 Basin (92 prop.)
City Limits

STORMWATER AND ROADWAY IMPROVEMENT PROJECTS

A. INTRODUCTION

The Stormwater and Roadway Improvement projects address a low-lying area within the City that does not contain an existing drainage system. Consequently, during the rainy season, this area has expansive flooding of the roadway, and often results in property damage to adjacent businesses and residential homes. These roads provide access to a health facility and other critical services for the community. The saturated soil, the low-lying conditions, and the higher water table are all factors that exacerbate the flooding and untreated stormwater worsens the City's water quality. The resultant ponding hastens mosquitoes, liter and potential contamination of the City's sanitary sewer system, creating a health hazard.

This funding would enable the City of Opa-locka to address this flooding and associated issues by constructing an adequate stormwater drainage system, reduce pollution and provide adequate treatment of runoff discharge for improved water quality. The elimination of the flooding conditions would also serve to reduce the traffic concerns that are created when certain areas of the streets become impassable.

B. EXISTING CONDITIONS

Opa-locka over the years has suffered from significant flooding costing millions of dollars in damages to residents and businesses. Opa-locka's existing stormwater system consists of a number of facilities that were built independently rather than a part of an integrated stormwater network Even though the city has drainage canals, the sewers and drains were not designed to convey stormwater runoff into them. To address the designed flaws, the City developed a comprehensive Flood Mitigation Strategy (FMS) and stormwater planning documents that defined how to improve stormwater quality and minimize risk to lives and property from floods. This project is selected based on four criteria: potential environmental benefits and water quality improvements, community acceptance, flood protection effectiveness, and cost vs. benefit.

1.1 NW 132nd Street Flood Mitigation and Drainage Infrastructure Improvements Project (between NW 27th Avenue and NW 30th Avenue)

Flooding in NW 132nd Street disrupts the lives of the most vulnerable residents of Opa-locka, particularly seniors, students, and working adults. When streets become impassable during rainy and hurricane seasons, seniors are unable to reach critical medical appointments, students face unsafe and unreliable routes to school, and adults are hindered from commuting to work, jeopardizing their livelihoods. The stagnant floodwaters not only damage roads but also pose serious health risks, fostering mosquito-borne diseases that disproportionately affect the elderly and children. This is more than an infrastructure issue—it's a crisis impacting the community's safety, health, and daily life. Addressing these challenges through the proposed flood mitigation project will ensure that all residents, especially those most at risk, can move freely and safely, restoring a sense of security and dignity to their lives. Legislative funding for this initiative is vital to creating a resilient, thriving community.

The City of Opa-locka seeks $3,500,000 in legislative funding to address the urgent drainage and flood management issues in NW 132nd Street, a densely populated area that includes a large proportion of vulnerable residents, including elderly individuals and students. This project will focus on developing an interconnected, closed drainage system with emergency overflow capabilities to protect the community, mitigate flood risks, and improve the quality of life and health for residents impacted by recurring flooding.

NW 132nd Street faces critical socio-demographic and infrastructure challenges, especially affecting vulnerable groups like the elderly and school children. The area's frequent flooding, even during minor rain, disrupts safe transit, particularly for students attending nearby schools, and poses serious health risks due to stagnant, contaminated water that promotes mosquito-borne diseases. The drainage system is outdated, poorly connected to canals, and fails to meet flood management needs, leaving key streets like NW 28th Ave, and Aswan Road (NW 30th Ave)., impassable and causing substantial roadway damage due to water and traffic stresses.

NW 132ND STREET

NW 132nd Street and Aswan Rd

The primary goals and objectives of this project are to improve stormwater quality by eliminating flooding and ponding on the roadways. The construction of a proper drainage system and realignment of the roads will eliminate health hazards, reduce pollution, and create a safe, usable roadway for residents, visitors, local employers, and employees of the city's local businesses. Improving the roadway network under this project will allow the City to protect against the negative economic impact of loss of business operations and migration.

Project Cost $3,500,000.00

City of Opa-locka ERP System Replacement

The City of Opa-locka seeks $1,571,287.00 in funding to support the deployment of a modernized Enterprise Resource Planning (ERP) system, which will enhance the City's financial, HR, revenue, and civic services management capabilities. This investment includes the potential addition of a Utility Billing (UB) module, should the City resume in-house billing currently handled by Miami-Dade County.

Project Overview and Justification:

1. **ERP System Implementation**:
    - The City's current ERP infrastructure requires an upgrade to meet modern transactional standards, promote uniformity across departments, and enhance reporting accuracy. Through an updated five-year agreement with Tyler Technologies, the ERP system will be upgraded with core modules supporting finance, human resources, revenue, and civic services management.
    - **Cost**: The base fiscal impact of the ERP update is $1,401,885.00 for installation, licensing, and training services including Project Management Services with an additional per year services $169,402.00

Benefits and Expected Outcomes:

The ERP update will enable uniform financial reporting, streamline citywide processes, and ensure future compatibility with best practices in municipal finance. This initiative will build a solid financial foundation for the City of Opa-locka, bolstering compliance, accuracy, and interdepartmental communication.

Project Cost $1,571,287.00

Sponsored by: Interim City Manager

RESOLUTION NO. 24-XXX

A RESOLUTION OF THE CITY COMMISSION OF THE CITY OF OPA-LOCKA, FLORIDA, RATIFYING A GRANT APPLICATION FOR THE TRANSPORTATION ALTERNATIVES PROGRAM 2025 FUNDED BY THE FLORIDA DEPARTMENT OF TRANSPORTATION (DISTRICT 6); PROVIDING FOR INCORPORATION OF RECITALS; PROVIDING FOR AN EFFECTIVE DATE

WHEREAS, The City of Opa-Locka (“City’’) applied for a grant from the Florida Department of Transportation, which provides grants for Non-Motorized Transportation Alternatives under the Transportation Alternatives Plan to enhance mobility and provide accommodations for Traffic Calming Improvements; and

WHEREAS, the amount of funding being requested is Eight Hundred Forty Thousand Dollars ($840,000.00) with a required City match of Two Hundred Ten Thousand Dollars ($210,000.00) for a total project cost of One Million Fifty Thousand Dollars ($1,050,000.00); and

WHEREAS, this grant application requires ratification due to the December 6th, 2024 submission deadline; and

WHEREAS, the Traffic Calming Improvements Project at the Codadad St./Opa-Locka Blvd. intersection aims to mitigate issues related to aggressive driving and speeding; and

WHEREAS, the scope of the Project is to enhance pedestrian safety and create a more pedestrian-friendly environment by implementing a raised intersection design. This intervention will slow vehicular traffic, increase driver awareness, and improve overall safety for all users of the intersection; and

WHEREAS, the Interim City Manager recommends the City Commission ratify the City’s submission of the grant application; and

WHEREAS, the City Commission finds it in the best interest of the City and its residents to ratify the grant application, as described herein.

NOW, THEREFORE, BE IT DULY RESOLVED BY THE CITY COMMISSION OF THE CITY OF OPA- LOCKA, FLORIDA:

SECTION 1. RECITALS ADOPTION. The recitals to the preamble herein are incorporated by reference.

SECTION 2. **AUTHORIZATION.** The City Commission of the City of Opa-Locka, Florida, hereby ratifies the submission of the grant application for the Transportation Alternative Application, as part of the Opa-Locka 2030 Comprehensive Plan adopted by the City Commission in 2021, attached hereto as Exhibit "A".

SECTION 3. **SCRIVENER'S ERRORS**. Sections of this Resolution may be renumbered or re-lettered and corrections of typographical errors which do not affect the intent may be authorized by the City Manager, following review by the City Attorney and without need of public hearing, by filing a corrected copy of same with the City.

SECTION 4. **EFFECTIVE DATE.** This Resolution shall take effect immediately upon adoption and is subject to the approval of the Governor or his designee.

PASSED and **ADOPTED** this _____ day of _____, 2024.

_____
John Taylor, Mayor

ATTEST:

_____
Joanna Flores, City Clerk

APPROVED AS TO FORM AND LEGAL SUFFICIENCY:

_____
Burnadette Norris-Weeks, P.A.
City Attorney

Moved by: _____

Seconded by: _____

VOTE:
Commissioner Bass _____
Commissioner Santiago _____
Commissioner Ervin _____
Vice Mayor Kelley _____
Mayor Taylor _____

City of Opa-locka
Agenda Cover Memo

Department Manager:	Adelina Gross			**Department Manager Signature:**			
Interim City Manager:	Sha'mecca Lawson			**CM Signature:**			
Commission Meeting Date:	12.11.2024		**Item Type:** *(Enter X in box)*	**Resolution**	**Ordinance**		**Other**
				X			
Fiscal Impact: *(Enter X in box)*	**Yes**	**No**	**Ordinance Reading:** *(Enter X in box)*		**1st Reading**		**2nd Reading**
		X	**Public Hearing:** *(Enter X in box)*		**Yes**	**No**	**Yes** / **No**
						X	X
Funding Source: *Account#* **:**	*(Enter Fund & Dept.)* Ex:		**Advertising Requirement:** *(Enter X in box)*		**Yes**		**No**
							x
Contract/P.O. Required: *(Enter X in box)*	**Yes**	**No**	**RFP/RFQ/Bid#:**		*N/A*		
	X						
Strategic Plan Related *(Enter X in box)*	**Yes**	**No**	**Strategic Plan Priority Area:** **Enhance Organizational** ☐ **Bus. & Economic Dev** ☐ **Public Safety** ☐ **Quality of Education** ☐ **Qual. of Life & City Image** ■ **Communication** ☐		**Strategic Plan Obj./Strategy:** *(list the specific objective/strategy this item will address)*		
	X						
Sponsor Name	Interim City Manager		**Department:**		Capital Improvements Program		

Short Title:

A RESOLUTION OF THE CITY COMMISSION OF THE CITY OF OPA-LOCKA APPROVING THE RATIFICATION OF THE GRANT APPLICATION SUBMISSION FOR THE TRANSPORTATION ALTERNATIVES PROGRAM 2025 FUNDED BY THE FLORIDA DEPARTMENT OF TRANSPORTATION (DISTRICT 6).

Staff Summary:

The City of Opa-locka has applied for a grant provided by the Florida Department of Transportation, which provides grants for Non-Motorized Transportation Alternatives under the Transportation Alternatives Plan to enhance mobility and provide accommodations for Traffic Calming Improvements. The amount of funding being requested is $840,000.00 with a required City match of $210,000.00 for a total project cost of $1,050,000.00. This grant application requires ratification due to the December 6th, 2024, submission deadline.

The Traffic Calming Improvements project at the Codadad St./Opa-locka Blvd. intersection aims to mitigate issues related to aggressive driving and speeding. The scope of the project is to enhance pedestrian safety and create a more pedestrian-friendly environment by implementing a raised intersection design. This intervention will slow vehicular traffic, increase driver awareness, and improve overall safety for all users of the intersection.

Proposed Action:

Staff recommends the City Commission ratify the submission of a grant application Transportation Alternative Application as part of the Opa-locka 2030 Comprehensive Plan adopted by the City Commission in 2021.

Financial Impact: This is a future project that will require to be incorporated into the Five-Year Financial Planning if the grant is received.

Proposed Action:

Staff recommends the City Commission ratify the submission of a grant application Transportation Alternative Application as part of the Opa-locka 2030 Comprehensive Plan adopted by the City Commission in 2021.

Attachment:

Grant Application Announcement-FY2025

Florida Department of Transportation

RON DESANTIS
GOVERNOR

1000 NW 111th Avenue
Miami, FL 33172-5800

JARED W. PERDUE, P.E.
SECRETARY

October 31, 2024

Ms. Aileen Bouclé, Executive Director
Miami-Dade Transportation Planning Organization
150 W. Flagler Street, Suite 1900
Miami, FL 33130

Ms. Christine Hurley, County Administrator
Monroe County
1100 Simonton Street, Suite 205
Key West, FL 33040

Subject: 2025 Transportation Alternatives Application Cycle

Dear Ms. Bouclé and Ms. Hurley:

The Florida Department of Transportation (FDOT) is pleased to announce the 2025 Transportation Alternatives (TA) application cycle. The Infrastructure Investment and Jobs Act increased annual allocations to the TA program presenting opportunities to fund additional critically important multimodal transportation projects at both the State and local level. Miami-Dade Transportation Planning Organization (TPO) and Monroe County Planning and Environmental Department are responsible for forwarding this announcement to local agencies within their respective jurisdictions.

Agencies are invited to submit applications for projects prioritized for Fiscal Year (FY) 2031. New projects are typically programmed in the fifth year of the Department's Tentative Work Program (FY 2031). However, funding is subject to the availability of TA Funds and an annual spending authority approved by the Florida Legislature.

The TA application cycle is administered through the FDOT District Six Program Management Office. For information on eligibility, the selection criteria, and application submittals, see the attached "2025 Transportation Alternatives Selection and Prioritization Criteria Cycle FDOT District Six." The TA application deadline is **December 6, 2024, 5:00 pm.** Applications must be submitted in the Florida Grants Application Process (GAP) system. Applicants must request user access by registering with flgap.com. For more information view How to Submit an Application, and GAP User Guide. **NOTE: Late application submittals will not be accepted.** Once the deadline passes, the system will not allow the applicant to upload or make changes to their applications.

Docusign Envelope ID: E4E194D4-C3A0-4CE9-9712-9E25D6A26C4C

We look forward to working with you and your municipalities. Please contact Daniel Iglesias, the Director of Transportation Development, at (305) 470-5464 or Jessica Beck-Galindo, the Local Program Administrator, at (305) 470-5404 if you have any questions.

Thank you for your continued partnership with the Department.

Sincerely,

DocuSigned by:
9A89F25A78144F3...
Stacy L. Miller, P.E.
District Secretary

Attachments: 2025 Transportation Alternatives Selection and Prioritization Criteria Cycle FDOT District Six

cc: Maria Teresita Vilches-Landa, P.E., Miami-Dade Transportation Planning Organization
Franchesca Taylor, AICP, Miami-Dade Transportation Planning Organization
Kevin Wilson, Monroe County
Emily Schemper, Monroe County
Janene Sclafani, Monroe County
Judith Clarke, P.E., Monroe County
Samantha Samford, Florida Department of Transportation
Daniel Iglesias, P.E., Florida Department of Transportation
Mario Cabrera, P.E., Florida Department of Transportation
Heidi Solaun, P.E., Florida Department of Transportation
Antonette Adams, Florida Department of Transportation
Dat Huynh, P.E., Florida Department of Transportation
Jessica Beck-Galindo, Florida Department of Transportation
Michael Lucero, Florida Department of Transportation
Ken Jeffries, Florida Department of Transportation

FLORIDA DEPARTMENT OF TRANSPORTATION DISTRICT VI 2025 TRANSPORTATION ALTERNATIVES SET-ASIDE PROGRAM (TA) FUNDING APPLICATION CYCLE FOR FISCAL YEAR 2031

APPLICATION SELECTION AND PRIORITIZATION CRITERIA

ACTIVITY SCHEDULE	WEEKDAY	DATE	TIME
CALL FOR APPLICATIONS	Monday	November 1, 2024	8:30 am
TA WORKSHOP	Wednesday	November 6, 2024	10:00 am to 12:00 pm
TA APPLICATIONS DEADLINE	Wednesday	December 6, 2024	5:00 pm (no post submittals)
AGENCY PROJECT PRESENTATIONS	Thursday Friday	January 9, 2024 (subject to change) January 10, 2024 (subject to change)	8:30 am to 5:00 pm 8:30 am to 5:00 pm

TRANSPORTATION ALTERNATIVES (TA) WORKSHOP

ATTENDEES	Miami Dade TPO Agencies & Monroe County Agencies
DATE & TIME	**November 6, 2024, 10 am to 12 pm**
ADDRESS	150 West Flagler Street, Suite 1900, Miami FL 33130 TPO Board Conference Room
ONLINE ACCESS	Microsoft Teams Join on your computer, mobile app or room device Click here to join the meeting Meeting ID: 250 374 271 27 Passcode: L2UETC Download Teams | Join on the web Or call in (audio only) +1 786-628-2782,,37336406# United States, Miami Phone Conference ID: 373 064 06## Find a local number

APPLICATION SUBMITTAL INSTRUCTIONS

The FDOT Grant Application Process (GAP) system is the Department's database for soliciting applications. Applicants must request user access by registering with flgap.com. For more information on "How to Apply in GAP" see page 3 *Resources*. Application deadline is December 6, 2024, 5pm. GAP/FDOT will not accept late submittals. **Note:** Failure to respond to application questions may result in the **disqualification** of the submission. If a question is not applicable to the project, respond with "not applicable."

GENERAL CRITERIA FOR SELECTION

1. TA funding participation shall not exceed $1.5 million for any single project and/ or phase upon grant award. Project costs exceeding $1.5 million must demonstrate allocated funds are available to complete the project.
2. TA funding participation shall not be less than $500 thousand for any single project and/or project phase (s) (except for studies see below) upon grant award.
3. TA funding participation for planning studies shall not be less than $250 thousand upon grant award.
4. Agencies submitting more than one application must rank the projects based on the agency's priorities. No more than 3 project applications per agency department can be submitted.
5. The application package requires:
   a) Completed application
   b) Resolution supporting the project
   c) Project information documentation
   d) Engineer's cost estimate or detailed opinion of probable costs

ELIGIBLE CATEGORIES FOR TA PROJECTS[1]

1. **Construction of on-road and off-road trail facilities for pedestrians, bicyclists, and other non-motorized forms of transportation**, including sidewalks, bicycle infrastructure, pedestrian and bicycle signals, traffic calming techniques, lighting and other safety-related infrastructure, and transportation projects to achieve compliance with the Americans with Disabilities Act (ADA) of 1990
2. **Construction, planning, and design of infrastructure-related projects and systems that will provide safe routes for non-drivers,** including children, older adults, and individuals with disabilities to access daily needs.
3. **Conversion and use of abandoned railroad corridors for trails** for pedestrians, bicyclists, or other non-motorized transportation users
4. **Construction of turnouts, overlooks, and viewing areas**
5. **Community improvement activities**, which include but are not limited to:
    a. Inventory, control, or removal of outdoor advertising
    b. Historic preservation and rehabilitation of historic transportation facilities
    c. Vegetation management practices in transportation rights-of-way to improve roadway safety, prevent against invasive species, and provide erosion control
    d. Archaeological activities relating to impacts from implementation of a transportation project eligible under title 23 of the US Code
6. Any **environmental mitigation activity**, including pollution prevention and pollution abatement activities and mitigation to:
    a. address storm water management, control, and water pollution prevention or abatement related to highway construction or due to highway runoff, including activities described in 23 U.S.C. 133(b) (11), 328(a), and 329; or
    b. reduce vehicle-caused wildlife mortality or to restore and maintain connectivity among terrestrial or aquatic habitats
7. The **Safe Routes to School (SRTS) program** eligible projects and activities listed at section 1404(f) of the SAFETEA-LU include:
    a. Infrastructure-related projects
    b. Non-infrastructure-related activities
    c. SRTS coordinator. SAFETEA-LU section 1404(f)(2)(A) lists "managers of safe routes to school programs" as eligible under the non-infrastructure projects
8. **Planning, designing, or constructing boulevards and other roadways largely in the right-of-way of former Interstate System routes or other divided highways**
9. **The recreational trails program under 23 U.S.C. 206 of title 23**
10. **Vulnerable Road User Safety Assessments**

ELIGIBLE PROJECT SPONSORS

1. Local government: Local government entities include any unit of local government below a state government agency, except for a TPO. Examples include city, town, township, village, borough, parish, or county agencies.
2. Regional transportation authority: Regional transportation authorities are considered the same as the Regional Transportation Planning Organizations defined in the statewide planning section (23 U.S.C. 135(m))
3. A transit agency: Transit agencies include any agency responsible for public transportation that is eligible for funds as determined by the Federal Transit Administration.
4. A natural resource or public land agency: Natural resource or public land agencies include any Federal, Tribal, State, or local agency responsible for natural resources or public land administration. Examples include State or

[1] Please use FHWA Guidance for more information
https://www.fhwa.dot.gov/environment/transportation_alternatives/guidance/ta_guidance_2022.pdf

local park or forest agencies; State or local fish and game or wildlife agencies; Department of the Interior Land Management Agencies; U.S. Forest Service.

5. A school district, local education agency, or school: School districts, local education agencies, or schools may include any public or nonprofit private school. Projects should benefit the general public and not only a private entity.
6. A Tribal government.
7. A metropolitan planning organization that serves an urbanized area with a population of 200,000 or fewer. MPO's representing urbanized areas over 200,000 population are not eligible entities.
8. Nonprofit entity. The BIL removed the requirement that the nonprofit entity be responsible for the administration of local transportation safety programs
9. Any other local or regional governmental entity with responsibility for, or oversight of, transportation or recreational trails (other than an TPO or a State agency) that the State determines to be eligible, consistent with the goals of this subsection.
10. State DOT, only at request of another eligible entity

REVIEW PROCESS

Miami-Dade County:

- Technical review of applications for project feasibility
- Project Presentations to the FDOT TA Reviewers
- Approval of TPO projects to program in the Work Program by TPO Governing Board

Monroe County:

- Technical review of applications for project feasibility
- Committee review and ranking of submitted projects
- Final selection and recommendation for approval to the Monroe Board of County Commissioners (BOCC)
- BOCC project recommendations submitted to FDOT

FLORIDA DEPARTMENT OF TRANSPORTATION TECHNICAL REVIEW EVALUATION CRITERIA (125 points)

1. Project Implementation	Project Schedule	(0-10 points)
	Project Permits	(0-10 points)
2. Project Feasibility	Scope of Work	(0-10 points)
	Opinion of Probable Cost (Design and/ or CEI)	(0-5 points)
	Engineer's Cost Estimate (Construction Phase)	(0-5 points)
	Environmental Evaluation ** Note: Environmental impacts may affect the total project cost and budget. For assistance in assessing budget considerations contact FDOT prior to applying. **	(0-10 points)
	Right of Way Evaluation	(0-10 points)
3. Local Agency Funding Contribution	0 % Contribution	(0 Points)
	1 - 5 % Contribution	(1-2 Points)
	6 - 10 % Contribution	(3-4 Points)
	11 - 15 % Contribution	(5-6 Points)
	16 - 20% Contribution	(7-8 Points)
	greater than 20% Contribution	(9-10 Points)
4. Project Sponsor Certification/ Performance	Full Certification or Project Specific w/ no corrective action	(0-15 points)
	Not certified, but coordinated a certification schedule w/FDOT	(0-10 points)
	Full or Project Specific Certification w/ corrective action	(0-5 points)
	Not certified and did not coordinate schedule w/ FDOT	(0 points)
	Procurement- Professional Services & Construction	(0-10 points)
	Project Management - Professional Services	(0-10 points)
	Project Management - Construction	(0-10 points)
	Invoicing	(0-10 points)

PROJECT PRESENTATIONS at FDOT DISTRICT 6

Applicants will be required to submit a PowerPoint presentation and present their project to the FDOT TA Reviewers. Presentations are tentatively scheduled for January 9th or 10th, 2025. Applicants are allotted 5 minutes to present each application, followed by 10 minutes of a question-and-answer session.

**** Note: Projects applications not presented on the date scheduled will be disqualified from consideration. ****

TRANSPORTATION PLANNING ORGANIZATION PROJECT EVALUATION (125 points)

1.	Project safety improvements for bicycle riders and/or pedestrians	(0-20 points)
2.	Intermodal transportation linkages improvements, including those that provides access to transit stations and/or facilities. For applications in Miami-Dade this includes the Strategic Miami Area Rapid Transit (SMART) Plan.	(0-20 points)
3.	Mobility enhancement or community development for disadvantaged groups (i.e., children, the elderly, the poor, those with limited transportation options, and the disabled)	(0-15 points)
4.	Local funding contribution or the completion of previous phases of project development	(0-10 points)
5.	Neighborhood or community quality of life improvements, improving environmental air, noise, water quality, and/or reducing the need for single occupancy vehicle trips	(0-15 points)
6.	Community support, including minutes of public meetings, newspaper clippings, petitions, letters of support from local business owners, property owners, nonprofit organizations, political leaders, and other groups	(0-20 points)
7.	Prioritization - Miami-Dade County's TPO and Monroe County will prioritize projects and award points based on prioritization. A maximum of 25 points will be assigned. The top ranked project from each county agency receives 25 points, the second ranked receives 24 points, the third ranked receives 23 points, etc. The final ranking is submitted to the TPO TA Coordinator and to Monroe County for Board Approval. All applicants will be notified of the results.	(0-25 points)

PROJECT IMPLEMENTATION

Projects prioritized in the current funding cycle are programmed into the FDOT 5-Year Work Program. Project sponsors must enter into a Local Agency Program (LAP) Agreement (Form No. 525-010-40) with FDOT prior to the start of any work for which reimbursement is requested. Project sponsors must have or obtain LAP Certification to qualify for project funding[2]. Projects must meet requirements, standards and rules, and procedures governing federally funded transportation projects, including right-of-way certification, environmental review, and Americans with Disabilities Act (ADA) compliance.

[2] State and federal agencies are generally exempt from the certification requirements of this section. This is due to the fact that state and federal agencies undergo extensive annual auditing protocols by both state and federal entities which are available for department review as needed. However, a District may request a state or federal agency obtain certification or recertification as needed.

RESOURCES

FDOT Local Agency Program Manual
http://www.fdot.gov/programmanagement/LP/Default.shtm.

FDOT PD&E Manual
https://www.fdot.gov/environment/pubs/pdeman/pdeman1.shtm

FDOT Basis of Estimates Manual
https://www.fdot.gov/programmanagement/estimates/documents/basisofestimatesmanual/boemanual

Transportation Alternatives Application Process
GAP User Access
How to apply in GAP

IF YOU HAVE ANY QUESTIONS OR NEED ASSISTANCE CONTACT

Miami Dade County	Franchesca Taylor, Transportation Program Development Manager Miami-Dade Transportation Planning Organization Phone: (305) 375-1738 Email: Franchesca.Taylor@miamidade.gov
Monroe County	Janene Sclafani, Transportation Planner Planning & Environmental Resources Department Phone: (305) 998-8810 Email: Sclafani-Janene@MonroeCounty-FL.Gov
Florida Department of Transportation	Jessica Beck-Galindo, Local Program Administrator Florida Department of Transportation District Six Phone: (305) 470-5404 Email: Jessica.Beck-Galindo@dot.state.fl.us

Sponsored by: Interim City Manager

RESOLUTION NO. 24-XXXX

A RESOLUTION OF THE CITY COMMISSION OF THE CITY OF OPA-LOCKA, FLORIDA AUTHORIZING THE INTERIM CITY MANAGER TO ENTER INTO AN AGREEMENT WITH ARTPAD INC FOR ARTISTIC SERVICES; PROVIDING FOR INCORPORATION OF RECITALS; PROVIDING FOR AN EFFECTIVE DATE

WHEREAS, the vision for the Art in the Right of Way for the City of Opa-Locka ("City") will be inspired by Moroccan and Moorish designs are known for their rich, intricate patterns and vibrant colors, blending elements from Islamic, Berber, and Andalusian art. These styles often feature geometric motifs, arches, and tile work, creating a sense of opulence and timeless beauty; and

WHEREAS, pursuant to Section 2-318(4)(g) of the City's Purchasing Code (as approved by Ordinance 2020-07), Artistic Services are not subject to competitive solicitation requirements; and

WHEREAS, the Interim City Manager is seeking authorization from the City Commission to enter into an agreement with ArtPad Inc for Artistic Services, for the City's beautification and cultural enhancement, in an amount not to exceed One Hundred Twenty-Five Thousand Dollars ($125,000.00); and

WHEREAS, the City Commission has determined that authorizing the City Manager to enter into an agreement with ArtPad Inc for Artistic Services, for the City's beautification and cultural enhancement, in an amount not to exceed One Hundred Twenty-Five Thousand Dollars ($125,000.00) is in the best interest of the City and its residents.

NOW, THEREFORE, BE IT DULY RESOLVED BY THE CITY COMMISSION OF THE CITY OF OPA-LOCKA, FLORIDA:

Section 1. Recitals Adopted. The recitals to the preamble herein are incorporated by reference.

Section 2. Approval to Negotiate. The City Commission of the City of Opa-Locka hereby authorizes the City Manager to enter into an agreement with ArtPad, Inc for Artistic Services, for the City's beautification and cultural enhancement, in an amount not to exceed One Hundred Twenty-Five

Thousand Dollars ($125,000.00).

Section 3. Scrivener's Errors. Sections of this Resolution may be renumbered or re-lettered and corrections of typographical errors, which do not affect the intent of this Resolution may be authorized by the Interim City Manager, following review by the City Attorney, without need of public hearing, by filing a corrected copy of same with the City Clerk.

Section 4. Effective Date. This Resolution shall take effect immediately upon adoption by the City Commission of the City of Opa-Locka.

PASSED and **ADOPTED** this _____ day of _____, 2024.

_____
John Taylor, Mayor

ATTEST:

_____
Joanna Flores, City Clerk

APPROVED AS TO FORM AND
LEGAL SUFFICIENCY:

_____
Burnadette Norris-Weeks, P.A.
City Attorney

Moved by: _____

Seconded by: _____

VOTE:

VOTE:

Commissioner Bass	_____
Commissioner Santiago	_____
Commissioner Ervin	_____
Vice Mayor Kelley	_____
Mayor Taylor	_____

City of Opa-locka
Agenda Cover Memo

Interim City Manager:	Sha'mecca Lawson			**ICM Signature:**				
Commission Meeting Date:	12.11.2024		**Item Type:** *(Enter X in box)*	**Resolution**	**Ordinance**		**Other**	
				X				
Fiscal Impact: *(Enter X in box)*	**Yes**	**No**	**Ordinance Reading:** *(Enter X in box)*		**1st Reading**		**2nd Reading**	
	X		**Public Hearing:** *(Enter X in box)*		**Yes**	**No**	**Yes**	**No**
						X		**X**
Funding Source: *Account#:*	*(Enter Fund & Dept)* Ex: See Financial Impact Section		**Advertising Requirement:** *(Enter X in box)*		**Yes**		**No**	
							X	
Contract/P.O. Required: *(Enter X in box)*	**Yes**	**No**	**RFP/RFQ/Bid#:**					
		X						
Strategic Plan Related *(Enter X in box)*	**Yes**	**No**	**Strategic Plan Priority Area:**		**Strategic Plan Obj./Strategy:** *(list the specific objective/strategy this item will address)*			
	X		**Enhance Organizational** ☐ **Bus. & Economic Dev** ■ **Public Safety** ☐ **Quality of Education** ☐ **Qual. of Life & City Image** ■ **Communication** ☐					
Sponsor Name	Interim City Manager		**Department:**		City Manager			

Short Title:

A RESOLUTION OF THE CITY COMMISSION OF THE CITY OF OPA-LOCKA AUTHORIZING THE INTERIM CITY MANAGER AND THE CITY ADMINISTRATION TO ACCEPT THE PROPOSAL OF ARTPAD INC FOR ART IN THE RIGHT OF WAY SERVICES

Staff Summary:

The City Administration is seeking authorization from the City Commission to enter into a contract for Artistic Services with ArtPad Inc for City's Beautification and Cultural Enhancement not to exceed $125,000.

The vision for the Art in the Right of Way for the City of Opa locka will be inspired by Moroccan and Moorish designs are known for their rich, intricate patterns and vibrant colors, blending elements from Islamic, Berber, and Andalusian art. These styles often feature geometric motifs, arches, and tile work, creating a sense of opulence and timeless beauty.

The City Administration is seeking authorization from the City Commission to enter into a contract for Artistic Services with ArtPad Inc. for City's Beautification and Cultural Enhancement not to exceed $125,000.

Financial Impact: The Artscape project has been allocated $62,500 in ARPA funding. Budget Amendment #1 will contribute an additional $62,500 in ARPA funds, bringing the total funding for the initiative to $125,000. This project does not involve any long-term or ongoing expenditures from the General Fund.

Proposed Action:

Staff recommends the City Commission approve the recommendation to enter into a direct Agreement with ArtPad Inc.

Attachment:

ArtPad Inc. Proposal of Services

CITY OF OPA-LOCKA AGREEMENT FOR ARTISTIC SERVICES

This Agreement is made this ____ day of _____, 2024, between the City of Opa-Locka, a municipal corporation organized and existing under the laws of the State of Florida and whose address is 780 Fisherman Street, Opa-Locka, Florida 33054 (the **"City"),** and ArtPad Inc (“Contractor”) whose address is (the **"Contractor").**

WITNESSETH

WHEREAS, the Contractor desires to enter into this Agreement ("Agreement") with City for Artistic Services. (the "Project"); and

NOW THEREFORE, in consideration of the mutual covenants set forth in this Agreement, the receipt and sufficiency of which is acknowledged, the parties agree as follows:

Section 1. Term. The term of this Agreement commences upon fully execution of this agreement and continues for one year, unless terminated earlier by its terms.

Section 2. Contract Terms. The Contractor agrees to provide the City with Artistic Services, in accordance with the City's requirements as set forth herein and the Contractor’s Sales Quote/Proposal, attached hereto and incorporated herein as Exhibit "A". The exhibits are incorporated into this Agreement for all purposes, and are collectively referred to as the "Contract Documents", and represent the entire agreement between the parties. In the event of conflict between or among the Contract Documents, the order of priority shall be: this Agreement and the Contractor's accepted proposal.

Section 3. Scope of Work

The following provisions are included:

A. City shall pay Contractor no more than the prices set forth in the Contract

Documents and in accordance with the provisions of the Contract Documents. If the City requires services not covered by unit prices already made a part of the Contract Documents, the Contractor shall submit a detailed written proposal to the authorized City representative before providing any such services. For these purposes, Adelina Gross as Capital Improvements Program Manager, shall be the City Representative and may be reached at (305)953-2868 Ext. 3001.

B. If permits are required, Contractor shall submit complete and accurate permit applications to all applicable permitting agencies within ten workdays of receiving from the City all documents necessary to file such permit applications. The City shall pay all permit and related fees directly to the permitting agencies, including any permit fees charged by the City.

C. Contractor shall not commence work on the Project unless and until the requirements for insurance have been fully met by Contractor and appropriate evidence thereof, in the City's sole discretion, has been provided to and approved by the City.

Section 4. Insurance.

A. The CONTRACTOR shall not commence work under this contract until it has obtained all insurance required under this paragraph and such insurance has been approved by the CITY nor shall the CONTRACTOR allow any Subcontractor to commence work on his sub-contract until all similar such insurance required of the subcontractor has been obtained and approved.

B. Certificates of insurance, reflecting evidence of the required insurance, shall be filed with the CITY prior to the commencement of the work. These Certificates shall contain a provision that coverage afforded under these policies will not be canceled or modified until at least thirty days (30) prior written notice has been given to the CITY. Policies shall be issued by companies authorized to do business under the laws of the State of Florida.

C. Financial Ratings must be no less than "A" in the latest edition of "Bests Key Rating Guide", published by A.M. Best Guide.

D. Insurance shall be in force until all work required to be performed under the terms of the Contract is satisfactorily completed as evidenced by the formal acceptance by the CITY. In the event the insurance certificate provided indicates that

the insurance shall terminate and lapse during the period of this contract, then in that event, the CONTRACTOR shall furnish, at least thirty days (30) prior to the expiration of the date or modification of such insurance, a renewed certificate of insurance as proof that equal and like coverage for the balance of the period of the contract and extension thereunder is in effect. The CONTRACTOR shall not continue to work pursuant to this contract unless all required insurance remains in full force and effect.

E. Commercial General Liability Insurance Covering premises-operations, product-completed operations, independent contractors, and contractual liability. Limits: Combined single limit bodily injury/property damage $1,000,000 per occurrence ($2,000,000 Aggregate).

F. Automobile Liability Insurance covering all owned, hired and non-owned automobile equipment, and other vehicles used by the successful bidder in the performance of the work with limits not less than $500,000 per Occurrence combined single limit for Bodily Injury Liability and Property Damage Liability.

G. Personal Injury in the minimum amounts of $500,000 for combined Bodily Injury and Property Damage.

H. Workers' Compensation coverage with statutory limits and Employer's Liability coverage with deductible or self-insured retention (SIR) indicated;

I. Employer's Liability Insurance with statutory limits;

J. A certificate naming the City as an "additional insured" for General Liability is required.

K. Certificate holder should be addressed as follows: City of Opa-Locka 780 Fisherman Street, 4th Floor Opa-Locka, FL 33054

L. The CONTRACTOR shall hold the CITY, the City of Opa-Locka their agents, and employees, harmless on account of claims for damages to persons, property or premises arising out of the operations to complete this Agreement and name the CITY as an additional insured under their policy.

M. The CITY reserves the right to require any other insurance coverage it deems necessary depending upon the exposures.

Section 5. Assignment. This Agreement, or any interest herein, shall not be assigned, transferred or otherwise encumbered, under any circumstances, by CONTRACTOR without the prior written consent of CITY. For purposes of this Agreement, any change of ownership of CONTRACTOR shall constitute an assignment which requires CITY approval. However, this Agreement shall run to the CITY and its successors and assigns.

Section 6. Records. CONTRACTOR shall keep the as-built drawings, the shop-drawings, books and records and require any and all subcontractors to keep books and records as may be necessary in order to record complete and correct entries as to personnel hours charged to this engagement, and any expenses for which CONTRACTOR expects to be reimbursed, if applicable. Such books and records will be available at all reasonable times for examination and audit by CITY and shall be kept for a period of three (3) years after the completion of all work to be performed pursuant to this Agreement, or for such longer period as is required by law. Incomplete or incorrect entries in such books and records will be grounds for disallowance by CITY of any fees or expenses based upon such entries.

IF CONSULTANT HAS QUESTIONS REGARDING THE APPLICATION OF CHAPTER 119, FLORIDA STATUTES, TO CONSULTANT'S DUTY TO PROVIDE PUBLIC RECORDS RELATING TO THIS AGREEMENT, CONTACT THE CUSTODIAN OF PUBLIC RECORDS AT (305) 953-2800, email: jflores@Opalockafl.gov OR BY MAIL: City of Opa-locka – City Clerk's Office, 780 Fisherman Street, Opa-Locka, FL 33054

Section 6. Ownership of Documents. Work product and other materials provided in connection with this Agreement are and shall remain the property of City.

Section 7. Notice. Notice hereunder shall be provided in writing by certified mail, return receipt requested, or customarily used overnight transmission with proof of delivery, to the following parties, with mandatory copies, as provided below:

For City: Sha'mecca Lawson, Interim City Manager
City of Opa-Locka
780 Fisherman Street
Opa-Locka, Florida, Florida 33054

Copy To:	Burnadette Norris-Weeks, Esq. City Attorney Burnadette Norris-Weeks, P.A. 401 NW 7th Avenue Fort Lauderdale, Florida 33311
For Contractor:	Rekha C.S.Kanhai ArtPad Inc 218 NW 8th Street, Miami, FL 33136
Copy To:	Rekha C Rayo ArtPad Inc 218 NW 8th Street, Miami, FL 33136

Section 8. Severability. This Agreement sets forth the entire agreement between Contractor and City with respect to the subject matter of this Agreement. ThisAgreement supersedes all prior and contemporaneous negotiations, understandings and agreements, written or oral, between the parties. This Agreement may not be modified except by the parties' mutual agreement set forth in writing and signed by the parties.

Section 9. E-verify. In accordance with Florida Statutes §448.095, the Contractor, prior to commencement of services or payment by the City, will provide to the City proof of participation/ enrollment in the EVerify system of the Department of Homeland Security. Evidence of participation/enrollment will be a printout of the Company's "Company Profile" page from the Everify system. Failure to be continually enrolled and participating in the E-Verify program will be a breach of contract which will be grounds for immediate termination of the contract by the City. The Consultant will not hire any employee who has not been vetted through E-Verify. The Contractor may not subcontract any work for the City to any subcontractor that has not provided an affidavit stating that the subcontractor does not employ, contract with or subcontract with an unauthorized alien.

IN WITNESS WHEREOF, the parties hereto have accepted, made and executed this Agreement upon the terms and conditions above stated on the day and year first above written.

[REMAINDER OF PAGE LEFT INTENTIONALLY BLANK]

CITY: City of Opa-Locka

By:_____
Sha'mecca Lawson, Interim City Manager

Date:_____

By:_____
Joanna Flores, City Clerk

APPROVED AS TO FORM AND LEGAL SUFFICIENCYFOR THE USE OF AND RELIANCE BY THE CITY OF OPA-LOCKA ONLY:

By:_____
City Attorney
Burnadette Norris-Weeks, P.A.

CONTRACTOR:
ARTPAD INC

By: _____ Witness:_____

_____ _____
PRINT NAME

Date:_____

_____
TITLE

Date:_____

Art Beautification Proposal and Scope of Work

Project Title: Community Art Beautification Initiative
Proposed by: Artpad
Date: December 2024

Project Overview

Artpad presents a comprehensive art beautification initiative designed to enhance the aesthetic appeal of public spaces, foster community pride, and promote cultural enrichment through visual art. The project will focus on integrating public art into the urban environment while fostering active community engagement, collaboration, and participation in the artistic process.

The vision for the Art beautification for the City of Opa lock will be inspired by Moroccan and Moorish designs are known for their rich, intricate patterns and vibrant colors, blending elements from Islamic, Berber, and Andalusian art. These styles often feature geometric motifs, arches, and tile work, creating a sense of opulence and timeless beauty. Here are some design ideas for a Moroccan or Moorish-inspired space or project.

Incorporate Moorish-style arches into the existing structure of doors, windows, or wall designs. These arches are typically narrow and elongated, creating a sense of elegance and grandeur.

Four targeted areas that the main focus will be on: Sharar Avenue, Sharazad Blvd, Ali Baba Avenue, Opa Locka Blvd, NW 27th Avenue, Perviz Avenue, Dunad Avenue,

- **Warm, Earthy Tones**: Use colors like terracotta, burnt orange, ochre, and deep red, which are prominent in Moroccan design.
- **Jewel Tones**: Incorporate vibrant hues like cobalt blue, emerald, green, sapphire, and ruby, often seen in Moroccan rugs, cushions, and wall art.
- **Contrast**: Pair warm colors with cool tones like turquoise or indigo for a balanced aesthetic.

Project Objectives

1. **Enhance Public Spaces**: Transform underutilized or neglected urban areas into vibrant, visually stimulating environments that reflect the local culture, history, and identity.

- **Roadway Art Integration:** Artistic enhancements and installations along selected city roadways, intersections, pedestrian walkways, and bridges.
- **Public Infrastructure Art:** Artistic design for public infrastructure elements such as bus stops, benches, streetlights, signage, and other urban furniture.
- **Community Engagement:** Include plans for community involvement, active participation and interaction, ensuring that the art installations resonate with local residents, visitors and the history of the City of Opa-locka.
- **Maintenance and Longevity:** Considerations for durability, maintenance requirements, and longevity of the art installation

2. **Foster Community Pride**: Engage local residents in the creative process to cultivate a sense of ownership and pride in the beautified spaces.
3. **Promote Cultural Engagement**: Integrate diverse artistic styles and community stories into the design, reflecting the unique cultural makeup of the area.
4. **Encourage Local Talent**: Provide a platform for emerging and established artists from the community to showcase their work and contribute to the transformation.
5. **Sustainability**: Ensure that the installations are designed with sustainable materials and methods to promote long-lasting beauty.

Scope of Work

The following outlines the major tasks and deliverables for the Art Beautification Initiative:

1. Initial Planning and Community Engagement

Timeline: 1 Month

- **Community Workshops**: Organize community meetings to gather input from local residents, businesses, and stakeholders about what types of artworks resonate with them and the themes they wish to see represented.
- **Surveys and Polls**: Distribute online and paper surveys to gather broader input on desired styles, themes, and locations for the art projects.
- **Partnership Development**: Collaborate with local schools, cultural organizations, and small businesses to ensure broad-based community involvement and support.

- **Artist Call**: Issue a public call for artists, both local and regional, to submit proposals or designs for the project. Consider artists' cultural relevance to the community.

2. Site Selection and Assessment

Timeline: 1 Month

- **Site Identification**: Identify specific public spaces for art installation, such as parks, building walls, public plazas, or transportation hubs.
- **Site Analysis**: Evaluate each site for factors like foot traffic, visibility, weather conditions, and historical or cultural relevance. Consider accessibility and safety for the community.
- **Permitting and Approvals**: Coordinate with local authorities to ensure all necessary permits and approvals are secured for installation.

3. Design Development

Timeline: 1-2 Months

- **Artist Selection**: Based on community feedback and selection criteria, choose local artists (or artist teams) whose styles reflect the diverse community perspectives gathered during the planning phase.
- **Design Presentation**: Artists will present their initial design concepts to the community through open exhibitions, virtual platforms, or town hall meetings. This allows for feedback and adjustments before finalizing the designs.
- **Finalization**: Refine designs based on community input and prepare detailed plans for materials, dimensions, and installation process.

4. Installation and Execution

Timeline: 2-3 Months

- **Materials Procurement**: Source sustainable, high-quality materials for each installation. Ensure that the materials are durable and weather resistant.

- **Artist Collaboration**: Artists will work on-site (or in their studios) to create the artwork according to the approved design.
- **On-Site Installation**: Installation teams will coordinate the physical process of creating murals, sculptures, or other forms of art. This phase may involve volunteers or community members assisting in tasks like painting or assembly.
- **Community Involvement**: Facilitate hands-on opportunities for local residents to participate, such as helping with the painting of a mural or contributing personal stories or images for a large collective artwork.

5. Final Review and Inauguration

Timeline: 1 Month

- **Quality Control**: Ensure the installations are completed to a high standard, checking for durability, safety, and aesthetic integrity.
- **Launch Event**: Host a community celebration, unveiling the new public art installations. This can include speeches from local leaders, artist talks, and performances by local artists or musicians.
- **Recognition**: Recognize contributing artists, volunteers, and community members who were part of the project.

6. Ongoing Maintenance and Community Engagement

Timeline: Ongoing

- **Maintenance Plan**: Establish a long-term maintenance strategy to ensure the artwork remains in good condition, including periodic touch-ups and repairs.
- **Community Feedback Loop**: Maintain an open line of communication with the community, inviting feedback on the artwork and future ideas for further beautification projects.
- **Educational Programs**: Develop educational programs or tours to educate the public about the artwork's significance, the artists' vision, and the impact of public art on urban development.

Deliverables

1. **Community Engagement Reports**: A detailed report of community input, workshops, and surveys.
2. **Design Proposals**: Detailed renderings and plans for each public art installation.
3. **Art Installations**: Completion of murals, sculptures, or other artistic features in the identified spaces.
4. **Launch Event**: A community celebration to unveil the art and engage the public.
5. **Maintenance Plan**: A sustainable strategy for the upkeep of the artworks, including a timeline and budget.

Timeline Summary

Phase	Timeline
Initial Planning & Engagement	1 Month
Site Selection & Assessment	1 Month
Design Development	1-2 Months
Installation & Execution	2-3 Months
Final Review & Inauguration	1 Month
Ongoing Maintenance	Ongoing up until a year after contract is completed

Budget Estimate

The proposed budget for the Art Beautification Initiative will depend on the scope, scale, and number of art installations. A preliminary budget outline includes:

- **Community Engagement**: $5,000
- **Artist Compensation**: $55,000
- **Materials & Supplies**: $30,000
- **Installation & Labor**: $25,000

- **Event Costs:** $5,000
- **Maintenance Fund**: $5,000 annually

Total Estimated Budget: $125,000

Conclusion

The **Community Art Beautification Initiative** by Artpad aims to transform public spaces into artistic hubs that represent the spirit of the community while promoting cultural engagement and local pride. Through inclusive community participation, collaboration with local artists, and sustainable practices, this initiative will not only enhance the beauty of public spaces but also create a lasting impact on the local identity and social cohesion.

Sponsored by: Interim City Manager

RESOLUTION NO. 2024-

A RESOLUTION OF THE CITY COMMISSION OF THE CITY OF OPA-LOCKA, FLORIDA, AUTHORIZING THE INTERIM CITY MANAGER TO ENTER INTO AN EMERGENCY AGREEMENT WITH DIAMANTI CONSTRUCTION & DEVELOPMENT, INC. TO COMPLETE ALL REMAINING CONSTRUCTION RELATED TO HISTORIC CITY HALL; PROVIDING ADOPTION OF REPRESENTATIONS; PROVIDING FOR AN EFFECTIVE DATE

WHEREAS, the City of Opa-Locka (City) has embarked on the restoration of the Opa-Locka Administrative Building located at 777 Sharazad Boulevard, also known as Historic City Hall; and

WHEREAS, the building was abandoned for more than eight years at one time during the City's renovation efforts; and

WHEREAS, Diamanti Construction & Development, Inc. has performed previous construction work and the work is estimated by City staff to be 98% complete; and

WHEREAS, the May 17, 2023 contract between Diamanti Construction & Development, Inc., and City expired six months from the effective date; and

WHEREAS, the contractor and architectural firm encountered several unforeseen conditions that have caused significant delays; and

WHEREAS, it is necessary to enter into a new agreement at an additional cost of Five Hundred Twenty Eight Thousand Seven Hundred Thirty Seven Dollars and 88/100 ($528,737.88) to cover the following renovation matters: Interior Stairs Repairs; Floor Decking and Joint Repair; Electrical Tower Stucco; Domes Restoration; Replacement of Elevator; HVAC Replacement; Bridge Walkway Replacement; Drainage Installation; Sewer Line Replacement and Waterline Replacement; and

WHEREAS, because this project is, in part, funded by Miami-Dade County, in order to remain eligible for funding the City must initiate contractor payments prior to

December 30, 2024; and

WHEREAS, the City Commission finds it is the best interest of the City to approve an emergency contract with Diamanti Construction & Development, Inc under the terms and conditions set forth in the contract attached hereto as Exhibit "A."

NOW THEREFORE, BE IT RESOLVED BY THE CITY COMMISSION OF THE CITY OF OPA-LOCKA, FLORIDA, THAT:

Section 1. Adoption of Representations. The foregoing "Whereas" clauses are hereby ratified and confirmed as being true and the same are hereby made a specific part of this Resolution.

Section 2. Scope of Work. The City Commission hereby approves the emergency contract at a total cost of Five Hundred Twenty Eight Thousand, Seven Hundred Thirty Seven Dollars and 88/100 ($528,737.88) to cover the following renovation matters: Interior Stairs Repairs; Floor Decking and Joint Repair; Electrical Tower Stucco; Domes Restoration; Replacement of Elevator; HVAC Replacement; Bridge Walkway Replacement; Drainage Installation; Sewer Line Replacement and Waterline Replacement and pursuant to the contract form attached hereto as Exhibit "A".

Section 3. Scrivener's Errors. Sections of this Resolution may be renumbered or re-lettered and corrections of typographical errors, which do not affect the intent of this Resolution may be authorized by the Interim City Manager, following review by the City Attorney, without need of public hearing, by filing a corrected copy of same with the City Clerk.

Section 4. Effective Date. This Resolution shall be effective immediately upon adoption hereof and approval by the Governor of the State of Florida or Governor's designee.

PASSED and **ADOPTED** this _____ day of _____, 2024.

_____
John Taylor, Mayor

ATTEST:

_____
Joanna Flores, City Clerk

APPROVED AS TO FORM
AND LEGAL SUFFICIENCY:

_____
Burnadette Norris-Weeks, P.A.
City Attorney

Moved by: _____

Seconded by: _____

VOTE:
Commissioner Bass _____
Commissioner Santiago _____
Commissioner Ervin _____
Vice Mayor Kelley _____
Mayor Taylor _____

City of Opa-locka
Agenda Cover Memo

Department Manager:	Adelina Gross			**Department Director Signature:**				
Interim City Manager:	Sha'mecca Lawson			**ICM Signature:**				
Commission Meeting Date:	*12.11.2024*		**Item Type:** *(Enter X in box)*	**Resolution**	**Ordinance**		**Other**	
				X				
Fiscal Impact: *(Enter X in box)*	**Yes**	**No**	**Ordinance Reading:** *(Enter X in box)*		**1st Reading**		**2nd Reading**	
	X		**Public Hearing:** *(Enter X in box)*		**Yes**	**No**	**Yes**	**No**
						X		X
Funding Source: *Account#* **:**	*(Enter Fund & Dept.)* Ex: See Financial Impact Section		**Advertising Requirement:** *(Enter X in box)*		**Yes**		**No**	
							X	
Contract/P.O. Required: *(Enter X in box)*	**Yes**	**No**	**RFP/RFQ/Bid#:**					
	X							
Strategic Plan Related *(Enter X in box)*	**Yes**	**No**	**Strategic Plan Priority Area:**		**Strategic Plan Obj./Strategy:** *(list the specific objective/strategy this item will address)*			
	X		**Enhance Organizational** ■ **Bus. & Economic Dev** □ **Public Safety** ■ **Quality of Education** □ **Qual. of Life & City Image** ■ **Communication** □					
Sponsor Name	City Manager		**Department:** Capital Improvements Program		City Manager			

Short Title:

A RESOLUTION OF THE CITY COMMISSION OF THE CITY OF OPA-LOCKA AUTHORIZING THE INTERIM CITY MANAGER TO ENTER INTO AN EMERGENCY AGREEMENT WITH DIAMANTI CONSTRUCTION AND DEVELOPMENT, INC. TO COMPLETE ALL REMAINING CONSTRUCTION IN RELATION TO HISTORIC CITY HALL.

Staff Summary:

The City has embarked on the restoration of the Opa-locka Administration Building located at 777 Sharazad Boulevard also known as Historic City Hall. The building was abandoned for over eight years since the last restoration effort took place in 2015.

As part of the renovation process, the Contractor and Architectural Firm have encountered several unforeseen conditions that could not have been detected during the initial assessment and/or during the plan's development. This will present an additional cost to remediate the conditions.

Staff is requesting to amend the contract for renovation for the following reasons:

-Interior Stairs Repairs (Water and Termites Damage)
-Floor Decking and Joist Repair (Water Damage)
-Electrical Tower Stucco Replacement (Separation caused by tree)
-Domes Restoration (Water and Termites Damage)
-Replacement of Elevator (Building Code)
-HVAC Replacement (Building Code)
-Bridge Walkway Replacement (Safety)
-Drainage Installation (Flooding)
-Sewer Line Replacement (Health and Safety & Building Code)
-Water Line Replacement (Health and Safety & Building Code)

The Contractor has provided an estimated cost of $530,000 for the completion of the restoration process. 98% of the work has been completed and the contractor has expended the funds for the labor and materials.

The restoration of Historic City Hall is partially grant funded through Miami Dade County and the Department of Historical Resources. To remain eligible for funding, the City must initiate contractor payments prior to December 30th, 2024.

Financial Impact: The total expenditure for the project is $2,012,330 for Historic City Hall Renovations and the current budget is $2,082,908 in account #44-541823. As a Capital Project this does not have an on-going impact on the future of the General Fund.

Proposed Action:

Staff recommends continuing this project as it will enhance the City's image as well as restore a National Historic Structure.

Attachment:

Request for Contract Amendment- Opa-locka Historic City Hall Restoration
Agreement- Diamanti Construction and Development

AGREEMENT FOR THE REHABILITATION OF HISTORIC CITY HALL

THIS IS AN AGREEMENT, dated the_____day of_____, 2024, between:

THE CITY OF OPA-LOCKA, a Florida municipal corporation,
hereinafter "CITY"

and

DIAMANTI CONSTRUCTION &
DEVELOPMENT, INC.
INCORPORATED
a Florida Corporation, hereinafter "CONTRACTOR."

WITNESSETH:

In consideration of the mutual terms and conditions, promises, covenants, andpayments hereinafter set forth, CITY and CONTRACTOR agree as follows:

ARTICLE 1
PREAMBLE

In order to establish the background, context and form of reference for this Agreement and to generally express the objectives, and intentions, of the respective parties herein, the following statements, representations and explanations shall be accepted as predicates for the undertakings and commitments included within the provisions which follow and may be relied upon by the parties as essential elements of the mutual considerations upon which this Agreement is based.

1.1 CITY is in need of a CONTRACTOR to provide the services for a project titled, Rehabilitation of Historic City Hall.

1.2 CITY finds it necessary to seek a professional, full-service company to rehabilitate Historic City Hall, within the City.

1.3 CITY previously issued RFP 23-0215100 (“RFP”), seeking a professional company with the knowledge and ability to perform the services sought.

1.3 At its meeting of April 12, 2023, CITY selected CONTRACTOR to perform services needed that will provide professional full services of a Rehabilitation company.

1.4 A contract was previously entered into between CITY and CONTRACTOR, however, the contract has expired and City desires to enter into a new contract for the completion of all remaining work in connection with the renovation of Historic City Hall.

ARTICLE 2 SCOPE OF WORK

2.1 CONTRACTOR shall furnish all of the materials, tools, supplies, and labor necessary to perform all of the work described in the Request for Proposals RFP 23-0215100, a copy of which is attached hereto and all work described in Attachment "A" attached hereto, Scope of Services.

2.2 CONTRACTOR shall abide by all specifications outlined in RFP 23-0215100 as if they are fully incorporated within this contract.

2.3 CONTRACTOR hereby represents to CITY, with full knowledge that CITY is relying upon these representations when entering into this Agreement with CONTRACTOR, and that CONTRACTOR has the professional expertise, experience and manpower to perform the services to be provided by CONTRACTOR as set forth in CONTRACTOR's response to RFP.

2.3 CONTRACTOR assumes professional and technical responsibility for performance of its services to be provided hereunder in accordance with applicable recognized professional standards and relevant Florida Statutes.

ARTICLE 3 COMMENCEMENT OF SERVICES

3.1 The CONTRACTOR shall commence work as directed by CITY upon the effective date this Agreement is executed by both parties.

ARTICLE 4 CONTRACT SUM

4.1 The CITY hereby agrees to pay CONTRACTOR for the faithful performance of this Agreement, for work completed in accordance with this Agreement and RFP 23-0215100. The payment for services pursuant to this Agreement shall not exceed Five Hundred Twenty Eight Thousand, Seven Hundred Thirty Seven Dollars and 88/100 ($528,737.88).

4.2 CONTRACTOR shall be solely responsible for and shall provide for the payment of workers compensation insurance coverage and premium, and all other insurance pursuant to Article 5 below, withholding taxes, FICA, pension and profit-sharing contributions, retirement contributions, if any, all remunerations; all labor contract compliance, and all other charges, fees, permits and expenses associated with the employment of such personnel provided by CONTRACTOR hereunder. CITY shall bear no responsibility for any such charge, fees, permits or expenses associated with the employment of such personnel by CONTRACTOR.

4.3 Payment to CONTRACTOR for all tasks and charges under this Agreement shall be based on the following conditions:

A. Disbursements. There are no reimbursable expenses associated with this Agreement.

B. Payment Schedule. Invoices received from CONTRACTOR pursuant to this Agreement will be reviewed by the appropriate financial staff. If services havebeen rendered in conformity with the Agreement, the invoice will be sent to theCity of Opa-locka's Finance Department for payment and may need to be subsequently approved by the State of Florida.

C. Availability of Funds. CITY's performance and obligation to pay under this Agreement is contingent upon an annual appropriation from the CITY.

D. Final Invoice. In order for both parties herein to close their books and records,the CONTRACTOR will clearly state "final invoice" on the CONTRACTOR's final bill to the CITY.

4.4 The making and acceptance of the final payment shall constitute a waiver of all claimsby the CITY. It shall also constitute a waiver of all claims by the CONTRACTOR, except those previously made and still unsettled.

ARTICLE 5
CONTRACTOR'S LIABILITY INSURANCE

5.1 The CONTRACTOR shall not commence work under this contract until it has obtained all insurance required under this paragraph and such insurance has been approved by the CITY nor shall the CONTRACTOR allow any Subcontractor to commence work on his sub-contract until all similar such insurance required of the subcontractor has been obtained and approved.

5.2 Certificates of insurance, reflecting evidence of the required insurance, shall be filed with the CITY prior to the commencement of the work. These Certificates shall contain a provision that coverage afforded under these policies will not be canceled until at least thirty days (30) prior written notice has been given to the CITY. Policies shall be issued by companies authorized to do business under the laws of the State of Florida.

5.3 Financial Ratings must be no less than "A" in the latest edition of "Bests Key Rating Guide", published by A.M. Best Guide.

5.4 Insurance shall be in force until all work required to be performed under the terms ofthe Contract is satisfactorily completed as evidenced by the formal acceptance by the CITY.In the event the insurance certificate provided indicates that the insurance shall terminate and lapse during the period of this contract, then in that event, the CONTRACTOR shall furnish, at least thirty (30) days prior to the expiration of the date of such insurance, a renewed certificate of insurance as proof that equal and like coverage for the balance of the period ofthe contract and extension thereunder is in effect. The CONTRACTOR shall not continue to work pursuant to this contract unless all required insurance remains in full force and effect.

5.5 Comprehensive General Liability insurance to cover bodily injury liability and property damage liability with minimum limits of One Million Dollars ($1,000,000.00) per occurrences. Exposures to be covered are:

- Premises and Operation

- Products/Completed Operations
- Broad Form Property Damages
- Broad Form Contractual Coverage applicable to this specific Agreement, including any hold harmless and/or indemnification agreement.
- Personal Injury Coverage with Employee and Contractual Exclusions removed,with minim limits of coverage equal to those required for Bodily Injury Liability and Property Damage Liability.

Business Automobile Liability with minimum limits of One Million Dollars ($1,000,000.00) per occurrence combined single limit for Bodily Injury Liability and Property Damage Liability. Coverage must be afforded on a form no more restrictive than the latest edition of the Business Automobile Liability policy, without restrictive endorsements, and must include:

- Owned vehicles
- Hired and Non-Owned Vehicles
- Employers' Non-Ownership.

5.6 The CONTRACTOR shall hold the CITY, the City of Opa-locka their agents, and employees, harmless on account of claims for damages to persons, property or premisesarising out of the operations to complete this Agreement and name the CITY as an additionalinsured under their policy.

5.7 The CITY reserves the right to require any other insurance coverage it deems necessary depending upon the exposures.

ARTICLE 6
PROTECTION OF PROPERTY

6.1 At all times during the performance of this Contract, the CONTRACTOR shall protect the CITY's property and properties adjoining the Project site from all damage whatsoever onaccount of the work being carried on pursuant to this Agreement.

ARTICLE 7
CONTRACTOR'S INDEMNIFICATION

7.1 The CONTRACTOR agrees to release the CITY from and against any and all liability and responsibility in connection with the above-mentioned matters. The CONTRACTOR further agrees not to sue or seek any money or damages from CITY in connection with the above-mentioned matters, except in the event that the CITY fails to pay to CONTRACTOR thefees and costs as provided for in Article 4 herein.

7.2 The CONTRACTOR agrees to indemnify and hold harmless the CITY, its trustees, elected and appointed officers, agents, servants and employees, from and against any and all claims, demands, or causes of action of whatsoever kind or nature, and the resulting losses, costs, expenses, reasonable attorneys' fees, liabilities, damages, orders, judgments, or decrees,sustained by the CITY or any third party arising out of, or by reason of, or resulting from the

CONTRACTOR's negligent acts, errors, or omissions.

7.3 If a court of competent jurisdiction holds the CITY liable for certain tortious acts of its agents, officers, or employees, such liability shall be limited to the extent and limit provided in 768.28, Florida Statutes. This provision shall not be construed as a waiver of any right or defense that the CITY may possess. The CITY specifically reserves all rights as against any and all claims that may be brought.

ARTICLE 8
INDEPENDENT CONTRACTOR

8.1 This Agreement does not create an employee/employer relationship between the parties. It is the intent of the parties that the CONTRACTOR is an independent contractor under this Agreement and not the CITY's employee for all purposes, including but not limited to, the application of the Fair Labor Standards Act minimum wage and overtime payments, Federal Insurance Contribution Act, the Social Security Act, the Federal Unemployment Tax Act, the provisions of the Internal Revenue Code, the State Workers Compensation Act, and the State unemployment insurance law. The CONTRACTOR shall retain sole and absolute discretion in the judgment of the manner and means of carrying out the CONTRACTOR's activities and responsibilities hereunder provided. This Agreement shall not be construed as creating any joint employment relationship between the CONTRACTOR and the CITY and the CITY will not be liable for any obligation incurred by CONTRACTOR, including but not limited to unpaid minimum wages and/or overtime premiums.

ARTICLE 9
CHANGES TO SCOPE OF WORK AND ADDITIONAL WORK

9.1 CITY or CONTRACTOR may request changes that would increase, decrease or otherwise modify the Scope of Services/Basic Services to be provided under this Agreementas described in Article 2 of this Agreement. Such changes or additional services must be in accordance with a written amendment, executed by the parties hereto, with the same formality and with equality and dignity prior to any deviation from the terms of this Agreement, including the initiation of any additional or extra work. Each amendment shall at a minimum include the following information on each project:

PROJECT NAME
PROJECT DESCRIPTION
ESTIMATED PROJECT COST
ESTIMATED COST FOR ADDITION OR CHANGE TO PROJECT CONTRACT
ESTIMATED PROJECT COMPLETION DATE

9.2 In no event will the CONTRACTOR be compensated for any work which has not been described in a separate written agreement executed by the parties hereto.

ARTICLE 10
TERM AND TERMINATION

10.1 This Agreement shall commence upon execution of this Agreement and shall not exceed December 30, 2024.

10.2 This Agreement may be terminated by either party for cause, or the CITY for convenience, upon thirty (30) days written notice by the CITY to CONTRACTOR in which event the CONTRACTOR shall be paid its compensation for services performed to termination date. In the event that the CONTRACTOR abandons this Agreement or causes itto be terminated, he shall indemnify the CITY against any loss pertaining to this terminationup to a maximum of the full contracted fee amount. All finished or unfinished documents, data, studies, plans, surveys, and reports prepared by CONTRACTOR shall become the property of CITY and shall be delivered by CONTRACTOR to CITY.

ARTICLE 11
CONTRACT DOCUMENTS

11.1 CONTRACTOR and CITY hereby agree that the following Specification and Contract Documents, which are attached hereto and made a part thereof, are fully incorporated herein and made a part of this Agreement, as if written herein word for word: this Agreement; RFP 23-0215100, Attachment "A".

ARTICLE 12
MISCELLANEOUS

12.1 Legal Representation. It is acknowledged that each party to this Agreement had the opportunity to be represented by counsel in the preparation of this Agreement and, accordingly, the rule that a contract shall be interpreted strictly against the party preparingsame shall not apply due to the joint contribution of both parties.

12.2 Assignments. This Agreement, or any interest herein, shall not be assigned, transferred, or otherwise encumbered, under any circumstances, by CONTRACTOR withoutthe prior written consent of CITY. For purposes of this Agreement, any change of ownershipof CONTRACTOR shall constitute an assignment which requires CITY approval. However, this Agreement shall run to the CITY and its successors and assigns.

12.3 Records. CONTRACTOR shall keep books and records and require any and all subcontractors to keep books and records as may be necessary in order to record complete and correct entries as to personnel hours charged to this engagement, and any expenses for which CONTRACTOR expects to be reimbursed, if applicable.

Such books and records shall be available at all reasonable times for examination and audit by CITY and shall be kept for aperiod of three (3) years after the completion of all work to be performed pursuant to this Agreement. Incomplete or incorrect entries in such books and records will be grounds for disallowance by CITY of any fees or expenses based upon such entries.

CITY is a public agency subject to Chapter 119, Florida Statutes. To the extent CONTRACTOR is acting on behalf of CITY pursuant to Section 119.0701, Florida Statutes, CONTRACTOR shall:

a. Keep and maintain public records that ordinarily and necessarily would be required to be kept and maintained by CITY were CITY performing the services under this agreement;

b. Provide the public with access to such public records on the same terms and conditions that the County would provide the records and at a cost that does not exceed that provided in Chapter 119, Florida Statutes, or as otherwise provided by law;

c. Ensure that public records that are exempt or that are confidential and exempt from public record requirements are not disclosed except as authorized by law; and

d. Meet all requirements for retaining public records and transfer to CITY, at no cost,all public records in possession of the CONTRACTOR upon termination of this Agreement and destroy any duplicate public records that are exempt or confidentialand exempt. All records stored electronically must be provided to the CITY.

12.4 Ownership of Documents. Reports, surveys, plans, studies and other data provided in connection with this Agreement are and shall remain the property of CITY.

12.5 No Contingent Fees. CONTRACTOR warrants that it has not employed or retained any company or person, other than a bona fide employee working solely for the CONTRACTOR, to solicit or secure this Agreement, and that it has not paid or agreed to payany person, company, corporation, individual or firm, other than a bona fide employee working solely for CONTRACTOR, any fee, commission, percentage, gift, or other consideration contingent upon or resulting from the award or making of this Agreement. For the breach or violation of this provision, the CITY shall have the right to terminate the Agreement without liability at its discretion, to deduct from the contract price, or otherwiserecover the full amount of such fee, commission, percentage, gift or consideration.

12.6 Notice. Whenever any party desires to give notice unto any other party, it must be given by written notice, sent by registered United States mail or national delivery service withverified confirmation. If by mail, with return receipt requested, addressed to the party for whom it is intended and the remaining party, at the places last specified, and the places for giving of notice shall remain such until they shall have been changed by written notice in compliance with the provisions of this section. For the present, the CONTRACTOR and the CITY designate the following as the respective places for giving of notice:

CITY:	Darvin Williams, Interim City Manager City of Opa-locka Municipal Complex 780 Fisherman Street, Fourth Floor Opa-Locka, FL 33054
Copy To:	Burnadette Norris-Weeks, City Attorney Burnadette Norris-Weeks, P.A. 401 North Avenue of the Arts Fort Lauderdale, Florida 33311
Contractor:	Mohammed S. Islam, President 524 N H Street Lake Worth Beach, FL 33460

12.7 Binding Authority. Each person signing this Agreement on behalf of either party individually warrants that he or she has full legal power to execute this Agreement on behalfof the party for whom he or she is signing, and to bind and obligate such party with respect to all provisions contained in this Agreement.

12.8 Exhibits. Each Exhibit referred to in this Agreement forms an essential part of this Agreement. The exhibits if not physically attached should be treated as part of this Agreement and are incorporated herein by reference.

12.9 Headings. Headings herein are for convenience of reference only and shall not be considered on any interpretation of this Agreement.

12.10 Severability. If any provision of this Agreement or application thereof to any person or situation shall, to any extent, be held invalid or unenforceable, the remainder of this Agreement, and the application of such provisions to persons or situations other than those asto which it shall have been held invalid or unenforceable shall not be affected thereby, and shall continue in full force and effect, and be enforced to the fullest extent permitted by law.

12.11 Governing Law. This Agreement shall be governed by the laws of the State of Floridawith venue lying in Miami-Dade County, Florida.

12.12 Disputes. Any claim, objection, or dispute arising out of the terms of this Agreementshall be litigated in the Eleventh Judicial Circuit Court in and for Miami-Dade County.

12.13 Attorney's Fees. To the extent authorized by law, in the event that either party brings suit for enforcement of this Agreement, the prevailing party shall be entitled to attorney's fees and court costs in addition to any other remedy afforded by law.

12.14 Extent of Agreement. This Agreement together with Contract Documents, attached as an Exhibit hereto, as amended herein above represents the entire and integrated agreement between the CITY and the CONTRACTOR and supersedes all prior negotiations, representations or agreements, either written or oral.

12.15 Waiver. Failure of the CITY to insist upon strict performance of any provision or condition of this Agreement, or to execute any right therein contained, shall not be construedas a waiver or relinquishment for the future of any such provision, condition, or right, but thesame shall remain in full force and effect.

12.16 E-verify. In accordance with Florida Statutes §448.095, the Contractor, prior to commencement of services or payment by the City, will provide to the City proof of participation/ enrollment in the EVerify system of the Department of Homeland Security. Evidence of participation/enrollment will be a printout of the Company's "Company Profile" page from the Everify system. Failure to be continually enrolled and participating in the E-Verify program will be a breach of contract which will be grounds for immediate termination of the contract by the City. The Consultant will not hire any employee who has not been vetted through E-Verify. The Contractor may not subcontract any work for the City to any subcontractor that has not provided an affidavit stating that the subcontractor does not employ, contract with or subcontract with an unauthorized alien.

IN WITNESS OF THE FOREGOING, the parties have set their hands and seals the dayand year first written above.

City of Opa-Locka

ATTEST:

_____ BY: _____

Joanna Flores
City Clerk

Shamecca Lawson
Interim City Manager

APPROVED AS TO FORM
AND LEGAL SUFFICIENCY:

_____
Burnadette Norris-Weeks, City Attorney

CONTRACTOR

WITNESSES:

_____ BY:_____
Mohammed S. Islam
President

_____

ATTEST:

_____
SECRETARY

STATE OF FLORIDA)
) SS:
COUNTY OF MIAMI-DADE)

BEFORE ME, an officer duly authorized by law to administer oaths and take acknowledgments, personally appeared _____ as _____, of a Florida corporation, and acknowledged executed the foregoing Agreement as the proper official of_____, for the use and purposes mentioned in it and affixed the official seal ofthe corporation, and that the instrument is the act and deed of that corporation.

IN WITNESS OF THE FOREGOING, I have set my hand and official seal at inthe State and County aforesaid on this_____day of_____, 2024.

_____
NOTARY PUBLIC

My Commission Expires:

EXHIBIT "A"
RFP 23-0215100 ("RFP"),

DIAMANTI CONSTRUCTION & DEVELOPMENT, INC
524 N H ST
LAKE WORTH BEACH, FL 33460
PH: 561-301-7191

Date: October 17, 2024

To:
City of Opa-locka
Capital Improvements Programs
780 Fisherman Street
Opa-locka, FL 33054

Subject: Request for Contract Amendment – Opa-locka Historic City Hall Restoration

Dear Capital Improvements Programs Dept.

Diamanti Construction & Development respectfully submits a formal request for a contract amendment related to the ongoing restoration of the Opa-locka Historic City Hall. During the construction period, we encountered unforeseen conditions and additional requirements that necessitated a revision in the project scope.

Attached, you will find a detailed breakdown of the requested change orders, totaling **$556,237.88**, as well as credits to the City of Opa-locka amounting to **$27,500.00**, for a total Contract Amendment of **$528,737.88.**

After factoring in these adjustments, the final contract amount stands at **$1,981,067.88**. Please feel free to reach out if further discussion or documentation is needed to facilitate the approval process.

Given the historical nature of the building and the unforeseen challenges we encountered, these adjustments were essential to ensure the project's success and alignment with restoration standards.

Thank you for your attention to this matter and continued partnership. We remain committed to completing this important restoration project with the highest level of quality.

Sincerely,

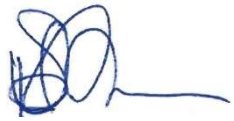

Mohamed S Islam

President
Diamanti Construction & Development

DIAMANTI CONSTRUCTION & DEVELOPMENT. INC

10/17/2024

OPA-LOCKA HISTORIC CITY HALL - RESTORATION

Request for Change Orders due to Unforeseen Conditions and Added Scope

CHANGE ORDERS (CO)

CHANGE ORDER #	Description	Requested Amount
1	HCH CO-1 interior stair repairs	$ 15,500.00
2	HCH CO-2 3rd floor Decking and joist repair - see breakdown below	$ 14,442.67
	2a - Deck repairs	$ 5,320.00
	2b - Joist repairs	$ 9,122.67
3	HCH CO-3 Elevator Rehabilitation	$ 159,100.00
4	HCH CO-4 in wall water spigot	$ 2,500.00
5	HCH CO-5 windows Vandalized and broken	$ 16,742.00
6	HCH CO-6 Domes Repair	$ 21,017.45
7	Stucco Repairs at Electric Tower, Dome & Walls - see breakdown belos	$ 86,142.36
	7a- Electric Tower Repairs	$ 6,666.96
	7b - Dome Stucco Repairs	$ 33,678.90
	7c - Window Leak Repair	$ 22,623.95
	7d - Stucco Repair	$ 23,172.55
8	Finials Repair and New Fabrication	$ 81,900.00
	8a- Finials Repair	$ 31,000.00
	8b- New Finials Fabrication	$ 50,900.00
9	Damaged Lights	$ 14,300.00
10	Fire Sprinkler MDC Permit Fee	$ 1,551.31
11	Fire Alarm Cost Increase	$ 6,800.00
12	New Under Landscape Electrical Conduit and Wiring(all sides of the building)	$ 36,500.00
13	Spiral Stairs Landing Joist Repair	$ 4,500.00
14	Observation Tower Electrical Wiring	$ 6,000.00
15	Dome Tiles Installations	$ 20,373.00
16	Electric Tower Tiles Installation	$ 8,905.00
17	New Landscape and Arch Lighting	$ 4,500.00
18	AC Closets Metal Louvered Door	$ 1,200.00
19	Base Board Paint	$ 11,500.00
20	French Drain Installation	$ 11,000.00
21	New Bridgeway Installation	$ 33,764.09

22	Underground Sanitary Line Replacement	**$ 2,500.00**
	TOTAL	**$ 556,237.88**
CREDIT TO THE CITY OF OPA-LOCKA		
CREDIT ITEMS #	**Description**	**Credit Amount**
1	Bridge Aluminum Rail	$ 9,500.00
2	Finish Millwork	$ 10,000.00
3	Sump Pump Elevatot	$ 5,500.00
4	Landscape credit	$ 2,500.00
	TOTAL	**$ 528,737.88**

AGREEMENT FOR THE REHABILITATION OF HISTORIC CITY HALL

THIS IS AN AGREEMENT, dated the 17 day of May, 2023, between:

THE CITY OF OPA-LOCKA, a Florida municipal corporation,
hereinafter "CITY"

and

DIAMANTI CONSTRUCTION &
DEVELOPMENT, INC.
INCORPORATED
a Florida Corporation, hereinafter "CONTRACTOR."

WITNESSETH:

In consideration of the mutual terms and conditions, promises, covenants, andpayments hereinafter set forth, CITY and CONTRACTOR agree as follows:

ARTICLE 1
PREAMBLE

In order to establish the background, context and form of reference for this Agreement and to generally express the objectives, and intentions, of the respective parties herein, the following statements, representations and explanations shall be accepted as predicates for the undertakings and commitments included within the provisions which follow and may be relied upon by the parties as essential elements of the mutual considerations upon which this Agreement is based.

1.1 CITY is in need of a CONTRACTOR to provide the services for a project titled, Rehabilitation of Historic City Hall.

1.2 CITY finds it necessary to seek a professional, full-service company to rehabilitate Historic City Hall, within the City.

1.3 CITY issued RFP 23-0215100 ("RFP"), seeking a professional company with the knowledge and ability to perform the services sought.

1.3 At its meeting of April 12, 2023, CITY selected CONTRACTOR to perform services needed that will provide professional full services of a Rehabilitation company.

1.4 Contractor's firm will be responsible for the Rehabilitation of Historic City Hall, within the City. CONTRACTOR's project team agrees to demonstrate the necessary experience, skills, and understanding for services rendered pursuant to RFP No. 23-0215100.

ARTICLE 2 SCOPE OF WORK

2.1 CONTRACTOR shall furnish all of the materials, tools, supplies, and labor necessary to perform all of the work described in the Request for Proposals RFP 23-0215100, a copy of which is attached hereto and specifically made a part of this Agreement as Exhibit "A", Scope of Services.

2.2 CONTRACTOR shall abide by all specifications outlined in RFP 23-0215100.

2.3 CONTRACTOR hereby represents to CITY, with full knowledge that CITY is relying upon these representations when entering into this Agreement with CONTRACTOR, and that CONTRACTOR has the professional expertise, experience and manpower to perform the services to be provided by CONTRACTOR as set forth in CONTRACTOR's response to RFP.

2.3 CONTRACTOR assumes professional and technical responsibility for performance of its services to be provided hereunder in accordance with applicable recognized professional standards and relevant Florida Statutes.

ARTICLE 3 COMMENCEMENT OF SERVICES

3.1 The CONTRACTOR shall commence work as directed by CITY upon the effective date this Agreement is executed by both parties.

ARTICLE 4 CONTRACT SUM

4.1 The CITY hereby agrees to pay CONTRACTOR for the faithful performance of this Agreement, for work completed in accordance with this Agreement and RFP 23-0215100. The payment for services pursuant to this Agreement shall not exceed One Million, Four Hundred Fifty-Two Thousand, Three Hundred Thirty Dollars ($1,452,330.00).

4.2 CONTRACTOR shall be solely responsible for and shall provide for the payment of workers compensation insurance coverage and premium, and all other insurance pursuant to Article 5 below, withholding taxes, FICA, pension and profit-sharing contributions, retirement contributions, if any, all remunerations; all labor contract compliance, and all other charges, fees, permits and expenses associated with the employment of such personnel provided by CONTRACTOR hereunder. CITY shall bear no responsibility for any such charge, fees, permits or expenses associated with the employment of such personnel by CONTRACTOR.

4.3 Payment to CONTRACTOR for all tasks and charges under this Agreement shall be based on the following conditions:

A. Disbursements. There are no reimbursable expenses associated with this Agreement.

B. Payment Schedule. Invoices received from CONTRACTOR pursuant to this Agreement will be reviewed by the appropriate financial staff. If services havebeen rendered in conformity with the Agreement, the invoice will be sent to theCity of Opa-locka's Finance Department for payment and may need to be subsequently approved by the State of Florida.

C. Availability of Funds. CITY's performance and obligation to pay under this Agreement is contingent upon an annual appropriation from the CITY.

D. Final Invoice. In order for both parties herein to close their books and records,the CONTRACTOR will clearly state "final invoice" on the CONTRACTOR's final bill to the CITY.

4.4 The making and acceptance of the final payment shall constitute a waiver of all claimsby the CITY. It shall also constitute a waiver of all claims by the CONTRACTOR, except those previously made and still unsettled.

ARTICLE 5
CONTRACTOR'S LIABILITY INSURANCE

5.1 The CONTRACTOR shall not commence work under this contract until it has obtained all insurance required under this paragraph and such insurance has been approved by the CITY nor shall the CONTRACTOR allow any Subcontractor to commence work on his sub-contract until all similar such insurance required of the subcontractor has been obtained and approved.

5.2 Certificates of insurance, reflecting evidence of the required insurance, shall be filed with the CITY prior to the commencement of the work. These Certificates shall contain a provision that coverage afforded under these policies will not be canceled until at least thirty days (30) prior written notice has been given to the CITY. Policies shall be issued by companies authorized to do business under the laws of the State of Florida.

5.3 Financial Ratings must be no less than "A" in the latest edition of "Bests Key Rating Guide", published by A.M. Best Guide.

5.4 Insurance shall be in force until all work required to be performed under the terms ofthe Contract is satisfactorily completed as evidenced by the formal acceptance by the CITY.In the event the insurance certificate provided indicates that the insurance shall terminate and lapse during the period of this contract, then in that event, the CONTRACTOR shall furnish, at least thirty (30) days prior to the expiration of the date of such insurance, a renewed certificate of insurance as proof that equal and like coverage for the balance of the period ofthe contract and extension thereunder is in effect. The CONTRACTOR shall not continue to work pursuant to this contract unless all required insurance remains in full force and effect.

5.5 Comprehensive General Liability insurance to cover bodily injury liability and property damage liability with minimum limits of One Million Dollars ($1,000,000.00) per occurrences. Exposures to be covered are:

- Premises and Operation

- Products/Completed Operations
- Broad Form Property Damages
- Broad Form Contractual Coverage applicable to this specific Agreement, including any hold harmless and/or indemnification agreement.
- Personal Injury Coverage with Employee and Contractual Exclusions removed,with minim limits of coverage equal to those required for Bodily Injury Liability and Property Damage Liability.

Business Automobile Liability with minimum limits of One Million Dollars ($1,000,000.00) per occurrence combined single limit for Bodily Injury Liability and Property Damage Liability. Coverage must be afforded on a form no more restrictive than the latest edition of the Business Automobile Liability policy, without restrictive endorsements, and must include:

- Owned vehicles
- Hired and Non-Owned Vehicles
- Employers' Non-Ownership.

5.6 The CONTRACTOR shall hold the CITY, the City of Opa-locka their agents, and employees, harmless on account of claims for damages to persons, property or premisesarising out of the operations to complete this Agreement and name the CITY as an additionalinsured under their policy.

5.7 The CITY reserves the right to require any other insurance coverage it deems necessary depending upon the exposures.

ARTICLE 6
PROTECTION OF PROPERTY

6.1 At all times during the performance of this Contract, the CONTRACTOR shall protect the CITY's property and properties adjoining the Project site from all damage whatsoever onaccount of the work being carried on pursuant to this Agreement.

ARTICLE 7
CONTRACTOR'S INDEMNIFICATION

7.1 The CONTRACTOR agrees to release the CITY from and against any and all liability and responsibility in connection with the above-mentioned matters. The CONTRACTOR further agrees not to sue or seek any money or damages from CITY in connection with the above-mentioned matters, except in the event that the CITY fails to pay to CONTRACTOR thefees and costs as provided for in Article 4 herein.

7.2 The CONTRACTOR agrees to indemnify and hold harmless the CITY, its trustees, elected and appointed officers, agents, servants and employees, from and against any and allclaims, demands, or causes of action of whatsoever kind or nature, and the resulting losses,costs, expenses, reasonable attorneys' fees, liabilities, damages, orders, judgments, or decrees,sustained by the CITY or any third party arising out of, or by reason of, or resulting from the

CONTRACTOR's negligent acts, errors, or omissions.

7.3 If a court of competent jurisdiction holds the CITY liable for certain tortious acts of its agents, officers, or employees, such liability shall be limited to the extent and limit provided in 768.28, Florida Statutes. This provision shall not be construed as a waiver of any right or defense that the CITY may possess. The CITY specifically reserves all rights as against any and all claims that may be brought.

ARTICLE 8
INDEPENDENT CONTRACTOR

8.1 This Agreement does not create an employee/employer relationship between the parties. It is the intent of the parties that the CONTRACTOR is an independent contractor under this Agreement and not the CITY's employee for all purposes, including but not limited to, the application of the Fair Labor Standards Act minimum wage and overtime payments, Federal Insurance Contribution Act, the Social Security Act, the Federal Unemployment Tax Act, the provisions of the Internal Revenue Code, the State Workers Compensation Act, and the State unemployment insurance law. The CONTRACTOR shall retain sole and absolute discretion in the judgment of the manner and means of carrying out the CONTRACTOR's activities and responsibilities hereunder provided. This Agreement shall not be construed as creating any joint employment relationship between the CONTRACTOR and the CITY and the CITY will not be liable for any obligation incurred by CONTRACTOR, including but not limited to unpaid minimum wages and/or overtime premiums.

ARTICLE 9
CHANGES TO SCOPE OF WORK AND ADDITIONAL WORK

9.1 CITY or CONTRACTOR may request changes that would increase, decrease or otherwise modify the Scope of Services/Basic Services to be provided under this Agreementas described in Article 2 of this Agreement. Such changes or additional services must be in accordance with a written amendment, executed by the parties hereto, with the same formality and with equality and dignity prior to any deviation from the terms of this Agreement, including the initiation of any additional or extra work. Each amendment shall at a minimum include the following information on each project:

PROJECT NAME
PROJECT DESCRIPTION
ESTIMATED PROJECT COST
ESTIMATED COST FOR ADDITION OR CHANGE TO PROJECT CONTRACT
ESTIMATED PROJECT COMPLETION DATE

9.2 In no event will the CONTRACTOR be compensated for any work which has not been described in a separate written agreement executed by the parties hereto.

ARTICLE 10
TERM AND TERMINATION

10.1 This Agreement shall commence upon execution of this Agreement and shall not exceed six months.

10.2 This Agreement may be terminated by either party for cause, or the CITY for convenience, upon thirty (30) days written notice by the CITY to CONTRACTOR in which event the CONTRACTOR shall be paid its compensation for services performed to termination date. In the event that the CONTRACTOR abandons this Agreement or causes itto be terminated, he shall indemnify the CITY against any loss pertaining to this terminationup to a maximum of the full contracted fee amount. All finished or unfinished documents, data, studies, plans, surveys, and reports prepared by CONTRACTOR shall become the property of CITY and shall be delivered by CONTRACTOR to CITY.

ARTICLE 11
CONTRACT DOCUMENTS

11.1 CONTRACTOR and CITY hereby agree that the following Specification and Contract Documents, which are attached hereto and made a part thereof, are fully incorporated herein and made a part of this Agreement, as if written herein word for word: this Agreement; RFP 23-0215100, Exhibit "A", and the Scope of Services attached hereto as Exhibit "B".

ARTICLE 12
MISCELLANEOUS

12.1 Legal Representation. It is acknowledged that each party to this Agreement had the opportunity to be represented by counsel in the preparation of this Agreement and, accordingly, the rule that a contract shall be interpreted strictly against the party preparingsame shall not apply due to the joint contribution of both parties.

12.2 Assignments. This Agreement, or any interest herein, shall not be assigned, transferred, or otherwise encumbered, under any circumstances, by CONTRACTOR withoutthe prior written consent of CITY. For purposes of this Agreement, any change of ownershipof CONTRACTOR shall constitute an assignment which requires CITY approval. However, this Agreement shall run to the CITY and its successors and assigns.

12.3 Records. CONTRACTOR shall keep books and records and require any and all subcontractors to keep books and records as may be necessary in order to record complete and correct entries as to personnel hours charged to this engagement, and any expenses for which CONTRACTOR expects to be reimbursed, if applicable.

Such books and records shall be available at all reasonable times for examination and audit by CITY and shall be kept for aperiod of three (3) years after the completion of all work to be performed pursuant to this Agreement. Incomplete or incorrect entries in such books and records will be grounds for disallowance by CITY of any fees or expenses based upon such entries.

CITY is a public agency subject to Chapter 119, Florida Statutes. To the extent CONTRACTOR is acting on behalf of CITY pursuant to Section 119.0701, Florida Statutes, CONTRACTOR shall:

a. Keep and maintain public records that ordinarily and necessarily would be required to be kept and maintained by CITY were CITY performing the services under this agreement;

b. Provide the public with access to such public records on the same terms and conditions that the County would provide the records and at a cost that does not exceed that provided in Chapter 119, Florida Statutes, or as otherwise provided by law;

c. Ensure that public records that are exempt or that are confidential and exempt from public record requirements are not disclosed except as authorized by law; and

d. Meet all requirements for retaining public records and transfer to CITY, at no cost,all public records in possession of the CONTRACTOR upon termination of this Agreement and destroy any duplicate public records that are exempt or confidentialand exempt. All records stored electronically must be provided to the CITY.

12.4 Ownership of Documents. Reports, surveys, plans, studies and other data provided in connection with this Agreement are and shall remain the property of CITY.

12.5 No Contingent Fees. CONTRACTOR warrants that it has not employed or retained any company or person, other than a bona fide employee working solely for the CONTRACTOR, to solicit or secure this Agreement, and that it has not paid or agreed to payany person, company, corporation, individual or firm, other than a bona fide employee working solely for CONTRACTOR, any fee, commission, percentage, gift, or other consideration contingent upon or resulting from the award or making of this Agreement. Forthe breach or violation of this provision, the CITY shall have the right to terminate the Agreement without liability at its discretion, to deduct from the contract price, or otherwiserecover the full amount of such fee, commission, percentage, gift or consideration.

12.6 Notice. Whenever any party desires to give notice unto any other party, it must be given by written notice, sent by registered United States mail or national delivery service withverified confirmation. If by mail, with return receipt requested, addressed to the party for whom it is intended and the remaining party, at the places last specified, and the places for giving of notice shall remain such until they shall have been changed by written notice in compliance with the provisions of this section. For the present, the CONTRACTOR and the CITY designate the following as the respective places for giving of notice:

CITY:	Darvin Williams, Interim City Manager City of Opa-locka Municipal Complex 780 Fisherman Street, Fourth Floor Opa- Locka, FL 33054
Copy To:	Burnadette Norris-Weeks, City Attorney Burnadette Norris-Weeks, P.A. 401 North Avenue of the Arts Fort Lauderdale, Florida 33311
Contractor:	Mohammed S. Islam, President 524 N H Street Lake Worth Beach, FL 33460

12.7 Binding Authority. Each person signing this Agreement on behalf of either party individually warrants that he or she has full legal power to execute this Agreement on behalfof the party for whom he or she is signing, and to bind and obligate such party with respect to all provisions contained in this Agreement.

12.8 Exhibits. Each Exhibit referred to in this Agreement forms an essential part of this Agreement. The exhibits if not physically attached should be treated as part of this Agreement and are incorporated herein by reference.

12.9 Headings. Headings herein are for convenience of reference only and shall not be considered on any interpretation of this Agreement.

12.10 Severability. If any provision of this Agreement or application thereof to any person or situation shall, to any extent, be held invalid or unenforceable, the remainder of this Agreement, and the application of such provisions to persons or situations other than those asto which it shall have been held invalid or unenforceable shall not be affected thereby, and shall continue in full force and effect, and be enforced to the fullest extent permitted by law.

12.11 Governing Law. This Agreement shall be governed by the laws of the State of Floridawith venue lying in Miami-Dade County, Florida.

12.12 Disputes. Any claim, objection, or dispute arising out of the terms of this Agreementshall be litigated in the Eleventh Judicial Circuit Court in and for Miami-Dade County.

12.13 Attorney's Fees. To the extent authorized by law, in the event that either party brings suit for enforcement of this Agreement, the prevailing party shall be entitled to attorney's fees and court costs in addition to any other remedy afforded by law.

12.14 Extent of Agreement. This Agreement together with Contract Documents, attached as an Exhibit hereto, as amended herein above represents the entire and integrated agreement between the CITY and the CONTRACTOR and supersedes all prior negotiations, representations or agreements, either written or oral.

12.15 Waiver. Failure of the CITY to insist upon strict performance of any provision or condition of this Agreement, or to execute any right therein contained, shall not be construedas a waiver or relinquishment for the future of any such provision, condition, or right, but thesame shall remain in full force and effect.

IN WITNESS OF THE FOREGOING, the parties have set their hands and seals the dayand year first written above.

City of Opa-Locka

ATTEST:

Joanna Flores
City Clerk

BY:

Darvin Williams
Interim City Manager

APPROVED AS TO FORM
AND LEGAL SUFFICIENCY:

Burnadette Norris-Weeks, City Attorney

CONTRACTOR

WITNESSES:

BY:
Mohammed S. Islam
President

Jorge Pavon Gonzalez

ATTEST:

SECRETARY

STATE OF FLORIDA)
) SS:
COUNTY OF MIAMI-DADE)

BEFORE ME, an officer duly authorized by law to administer oaths and take acknowledgments, personally appeared MOHAMMED ISLAM as PRESIDENT, of a Florida corporation, and acknowledged executed the foregoing Agreement as the proper official of Diamanti Construction, for the use and purposes mentioned in it and affixed the official seal ofthe corporation, and that the instrument is the act and deed of that corporation.

IN WITNESS OF THE FOREGOING, I have set my hand and official seal at inthe State and County aforesaid on this 05th day of MAY, 2023.

NOTARY PUBLIC

ERICA ANDRADE-WATTS
Notary Public - State of Florida
Commission # HH 072720
My Comm. Expires Jan 24, 2025

My Commission Expires:

EXHIBIT "A"
RFP 23-0215100 ("RFP"),

2780 S.W. DOUGLAS ROAD, SUITE 302, MIAMI, FLORIDA 33133. VOICE 305.445.3765. AR 14445 ARCHITECTURE. . PLANNING. INTERIORS

July 15, 2024

Adelina Gross
City of Opa-locka
780 Fisherman Street
Opa-locka, FL 33054
Via Email

Re: Historic Opa-locka City Hall
RCO # 1 _ Interior Stairs Repairs

Dear Adelina:

We are in receipt of RCO # 01 requesting additional costs of $**15,796.76** to rebuild 1st and 2nd level stairs at Historic Opa-locka City Hall Project.

Due to extreme termite and water damage to the wood of the stairs, (most of the rafters were eaten by termite and had extensive water damage) the 1st and 2nd level stairs needed to re-framed/ re-built. Framing and replacing all treads and railings was also required. At the 3rd level, reinforcement of the structural components with structural anchors and bolts were embedded into the concrete wall. Termite and water damaged treads were replaced. Cost as presented and the 28 day extension as presented are acceptable.

The additional cost of **$15,796.76** is recommended to the **City of Opa-Locka** for final approval plus 28 additional days

Sincerely:

M. C. Harry and Associates, Inc.

Lourdes Solera, FAIA
Principal / Project Manager

Cc: Mohammed Islam / DC&D
Carlos Gonzalez / City of Opa-locka
Juan Corredor / MCHA

2780 S.W. DOUGLAS ROAD, SUITE 302, MIAMI, FLORIDA 33133. VOICE 305.445.3765. AR 14445 ARCHITECTURE. . PLANNING. INTERIORS

July 15, 2024

Mohammed S Islam
Diamanti Construction & Development, Inc
524 N H Street
Lake Worth Beach, FL 33460
Via Email

Re: Historic Opa-locka City Hall
RCO # 2 _ 3rd Floor Decking and Joist Repair

Dear Mohammed:

We are in receipt of RCO # 02 requesting additional costs of $**14,442.67** to replace the 3rd floor plywood deck sheathing (two layers) and reinforce the joists and regrouting loose blocks at Historic Opa-locka City Hall Project. MCHA requested that DC&D separate the cost by item into 1) Deck Repair and 2) Joist Repair.

1) **Deck Repair:**

Due to extreme termite and water damage to the plywood floor deck sheathing – both layers of plywood needed to be replaced. As per back up provided, 50 sheets of 4x8 plywood, two layers, was used to replace the damaged floor decking. Note 44 on sheet A2.03 says remove damaged 4x8 wood decking and provide new, there is no specific quantity. This scope is part of the project bid. If DC&D did not properly price, backup indicating how much the bid included for replacing plywood sheathing must be presented.
RFI 21 was submitted on 12-13-23 about damaged plywood sheathing. MCHA response from 12-20-23 indicated that our drawings did not indicate any quantity of sheathing and that no cost or additional days would be considered. (see attached)

MCHA **does not** recommend the additional cost of **$5320** to the City of Opa-Locka because this scope has always been part of the project. It is not considered unforeseen or additional scope.

2) **Joist Repair:**

Once the floor decking was removed, it became evident that the unforeseen condition of the joist needed repair/ replacement due to termite and water damage. Added scope included reinforcing the joists and regrouting loose blocks. The cost as presented is acceptable however the backup has some items not clearly related to the joist repair. Material costs have been reduced (see attached).

The additional cost of **$8,2012.01** will be recommended to the **City of Opa-locka** for their final approval.
Sincerely:

M. C. Harry and Associates, Inc.

Lourdes Solera, FAIA
Principal / Project Manager

Cc: Adelina Gross/ City of Opa-locka
Carlos Gonzalez / City of Opa-locka
Juan Corredor / MCHA

PROJECT	HISTORIC CITY HALL - BUILDING RENOVATIONS 777 Sharazad Blvd. Opa-locka, FL 33054	**PROJECT NO.**	2023-01-015
CONTRACTOR	DIAMANTI CONSTRUCTION	**CONTRACT NO.**	
ARCHITECT	MC HARRY ARCHITECTS	**DATE**	12-13-23

REQUEST FOR INFORMATION # 21

FROM: Diamanti Construction TO: MC Harry Architects

FROM CONTRACTOR:

Subject: 3rd Level Floor Sheeting and Joist

Question:

During the demolition of the 3rd level floor, we discovered both termite and water damage on the base and top sheeting, as well as damaged floor joists. The framing had to be disassembled for demolition, and all the bottom tracks were damaged due to rust. We have attached a few pictures for your review. Initially, the plan and estimate called for 4-6 4x8 plywood sheeting, but it seems that we will require to replace all sheeting(between35-40pieces) and floor joist repairs. We can only open one section at a time due to the drywall ceiling below being soft and a safety hazard. Can't estimate the additional cost until everything is exposed.

Suggestion:

Estimated Cost:_____ ~~Schedule Changes: 15 Days~~

REPLY TO CONTRACTOR	**DATE ANSWERED:**

NOTE 44 - DOES NOT PROVIDE QUANTITY. IN FACT IT INDICATES THAT THE ENTIRE AREA IS TO HAVE THE PLYWOOD SHEATHING REMOVED AND REPLACED WITH NEW. NO ADDITIONAL COSTS OR DAYS ARE ANTICIPATED.

JUAN J. CORREDOR
12/20/2023

HCH_Change Order-02 Purchase List

Item No	Date	Vendor	Amount
1	12/08/23	Home Depot	$503.96
2	12/09/23	Home Depot	$624.37
3	12/11/23	Home Depot	$971.12
4	12/12/23	Home Depot	$158.42
5	12/14/23	Home Depot	$128.66
6	12/15/23	Home Depot	$178.27
7	01/06/24	Home Depot	$718.13
8	01/08/24	Home Depot	$13.48
9	01/11/24	Home Depot	$287.47
10	01/12/24	Home Depot	$422.90
11	01/16/24	Home Depot	$184.91
12	01/23/24	Home Depot	$306.17
13	01/26/24	Home Depot	$344.81
		TOTAL	$4,842.67

Approved

256.46
46.14
0
158.42
0
178.27
0
0
0
0
0
292.72
0

$932.01
IGL
7-15-24

Plywood sheets

1-26-24 - (5) - Sanded Pine - 3/8 — NA
12-8-23 - (6) - RTD Sheathing - 23/32
12-9-23 (14) - RTD Sheathing 23/32
12-11-23 (16) - PT Sheathing - 19/32
1-6-24 (10) - CDX PT " 19/32
1-11-24 - (6) - " " 19/32
1-16-24 (3) " " "
1-26-24 (5) Sanded Pine - 3/8. — NA

in project scope.

12-8-23

SPECIAL SERVICES CUSTOMER INVOICE

 No. H0209-289554

Store 0209 NW DADE
5500 NW 167TH STREET
HIALEAH, FL 33014

Phone: (305) 624-1900
Salesperson: OBC070
Reviewer:

REPRINT

2024-03-01 00:01

SOLD TO

Name	ISLAM MOHAMMED	Phone 1	(561) 301-7191
Address	3832 PARKSIDE CIR	Phone 2	(561) 301-7191
		Company Name	AAA INVESTMENT OF PBC INC
City	PALM SPRINGS	Job Description	Hstorical Opa Locka
State	FL	Zip 33461	County DADE

CARRY OUT MERCHANDISE

MERCHANDISE AND SERVICE SUMMARY

We reserve the right to limit the quantities of merchandise sold to customers

REF # W01 SKU # 0000-515-664 The items listed in this section will be carried out of the store by the customer at time of sale.

STOCK MERCHANDISE CARRIED OUT:

REF #	SKU	QTY	UM	DESCRIPTION	PI	TAX	PRICE EACH	EXTENSION
R01	0000-560-499	4.00	EA	2 in. x 8 in. x 12 ft. #2 Prime Kiln-Dried Southern Yellow Pine Lumber /		Y	$10.78	$43.12*
R02	1005-496-038	1.00	EA	Bi-Metal Reciprocating Saw Blade Set (28-Piece) /		Y	$26.89	$26.89*
R03	1007-843-820	1.00	EA	Universal Fit Wood and Metal Oscillating Blade Set (5-Piece) /		Y	$26.89	$26.89*
R04	0000-166-103	6.00	EA	23/32 in. x 4 ft. x 8 ft. RTD Sheathing Syp /		Y	$38.60	$231.60*
R05	1005-752-813	1.00	PA	Concrebond 3.5 Gal. Blue Concrete Bonding Agent and Adhesive /		Y	$51.95	$51.95*
R06	0000-218-340	1.00	EA	16.9 fl. oz. Purified Drinking Water (24-Pack) /		N	$4.48	$4.48*
R07	0000-757-482	1.00	EA	#8 x 3 in. Philips Bugle-Head Coarse Thread Sharp Point Drywall Screws (5 lbs./Pack) /		Y	$22.48	$22.48*
R08	1002-314-578	1.00	EA	5/8 in. x 18 in. 4-Cutter SDS-PLUS Carbide Drill Bit /		Y	$33.99	$33.99*
R09	0000-543-706	4.00	EA	1/2-13 in. x 8 in. Galvanized Hex Bolt /		Y	$3.11	$12.44*
R10	0000-538-981	4.00	EA	1/2 in. Hot Dipped Galvanized Cut Washer /		Y	$0.38	$1.52*
R11	0000-538-892	8.00	EA	1/2 in.-13 tpi Galvanized Hex Nut (1-Pack) /		Y	$0.49	$3.92*
R12	0000-886-757	2.00	EA	5/8 in.-11 Galvanized Hex Nut /		Y	$0.55	$1.10*
R13	0000-887-116	2.00	EA	5/8 in. Galvanized Flat Washer /		Y	$0.54	$1.08*
R14	0000-756-430	2.00	EA	5/8 in.-11 x 10 in. Galvanized Hex Bolt /		Y	$4.91	$9.82*
							MERCHANDISE TOTAL:	$471.28
							*** CONTINUED ON NEXT PAGE ***	

- Deck
- Joist

Check your current order status online at
www.homedepot.com/orderstatus

* Indicates item markdown
Customer Copy

CARRY OUT MERCHANDISE #1
(Continued)

REF #W01

END OF CARRY OUT MERCHANDISE - REF #W01

TOTAL CHARGES OF ALL MERCHANDISE & SERVICES

Policy Id (PI):
: ;

'The Home Depot reserves the right to limit / deny returns. Please see the return policy sign in stores for details.'

ORDER TOTAL	$471.28
SALES TAX	$32.68
TOTAL	$503.96
BALANCE DUE	$0.00

END OF ORDER No. H0209-289554

$471.28
less deck 231.60
239.68
16.78
$256.46
7.15.24

12.9.23

SPECIAL SERVICES CUSTOMER INVOICE

Page 1 of 1 **No. H0209-289668**

Store 0209 NW DADE
5500 NW 167TH STREET
HIALEAH, FL 33014

Phone: (305) 624-1900
Salesperson: EXA46B5
Reviewer:

REPRINT

2024-03-01 00:02

SOLD TO

Name	ISLAM MOHAMMED	Phone 1	(561) 301-7191
Address	3832 PARKSIDE CIR	Phone 2	(561) 301-7191
		Company Name	AAA INVESTMENT OF PBC INC
City	PALM SPRINGS	Job Description	city hall
State	FL	Zip 33461	County DADE

CARRY OUT MERCHANDISE

MERCHANDISE AND SERVICE SUMMARY

We reserve the right to limit the quantities of merchandise sold to customers

REF # W01 SKU # 0000-515-664 The items listed in this section will be carried out of the store by the customer at time of sale.

STOCK MERCHANDISE CARRIED OUT:

REF #	SKU	QTY	UM	DESCRIPTION	PI	TAX	PRICE EACH	EXTENSION
R01	0000-560-499	4.00	EA	2 in. x 8 in. x 12 ft. #2 Prime Kiln-Dried Southern Yellow Pine Lumber /		Y	$10.78	$43.12*
R02	0000-166-103	14.00	EA	23/32 in. x 4 ft. x 8 ft. RTD Sheathing Syp /		Y	$38.60	$540.40*
							MERCHANDISE TOTAL:	$583.52
							END OF CARRY OUT MERCHANDISE - REF #W01	

TOTAL CHARGES OF ALL MERCHANDISE & SERVICES

Policy Id (PI):
: ;

'The Home Depot reserves the right to limit / deny returns. Please see the return policy sign in stores for details.'

ORDER TOTAL	$583.52
SALES TAX	$40.85
TOTAL	$624.37
BALANCE DUE	$0.00

END OF ORDER No. H0209-289668

- deck
- joist.

$583.52
less deck - 540.40
43.12
tax 3.02
$46.14

Check your current order status online at www.homedepot.com/orderstatus

Page 1 of 1 **No. H0209-289668**

* Indicates item markdown
Customer Copy

15.24

12.11.23

SPECIAL SERVICES CUSTOMER INVOICE

 No. H0209-289887

Store 0209 NW DADE
5500 NW 167TH STREET
HIALEAH, FL 33014

Phone: (305) 624-1900
Salesperson: LJM1OT8
Reviewer:

REPRINT

2024-03-01 00:03

SOLD TO

Name	ISLAM MOHAMMED	Phone 1	(561) 301-7191
Address	3832 PARKSIDE CIR	Phone 2	(561) 301-7191
		Company Name	AAA INVESTMENT OF PBC INC
City	PALM SPRINGS	Job Description	historical opa locka
State	FL	Zip 33461	County DADE

CARRY OUT MERCHANDISE

MERCHANDISE AND SERVICE SUMMARY

We reserve the right to limit the quantities of merchandise sold to customers

REF # W01 SKU # 0000-515-664 The items listed in this section will be carried out of the store by the customer at time of sale.

STOCK MERCHANDISE CARRIED OUT:

REF #	SKU	QTY	UM	DESCRIPTION	PI	TAX	PRICE EACH	EXTENSION
R01	0000-757-465	1.00	EA	#6 x 2 in. Philips Bugle-Head Coarse Thread Sharp Point Drywall Screws (5 lbs./Pack) / not applicable - NA		Y	$18.00	$18.00*
R02	0000-218-340	1.00	EA	16.9 fl. oz. Purified Drinking Water (24-Pack) /		N	$4.48	$4.48*
R03	1005-752-813	3.00	PA	Concrebond 3.5 Gal. Blue Concrete Bonding Agent and Adhesive /		Y	$51.95	$155.85*
R04	1003-238-046	1.00	EA	Tracking Point 7-1/4 in. x 24-Tooth Framing Circular Saw Blade (3-Pack) /		Y	$24.27	$24.27*
R05	1001-790-448	16.00	EA	19/32 in. x 4 ft. x 8 ft. CDX Ground Contact Pressure-Treated Pine Plywood /		Y	$44.08	$705.28
						MERCHANDISE TOTAL:		$907.88
						END OF CARRY OUT MERCHANDISE - REF #W01		

TOTAL CHARGES OF ALL MERCHANDISE & SERVICES

Policy Id (PI):
: ;

'The Home Depot reserves the right to limit / deny returns. Please see the return policy sign in stores for details.'

ORDER TOTAL	$907.88
SALES TAX	$63.24
TOTAL	$971.12
BALANCE DUE	$0.00

END OF ORDER No. H0209-289887

-Joist

NOT RELATED TO JOIST REPAIR. NOT APPROVED

7.15.24

Check your current order status online at www.homedepot.com/orderstatus

* Indicates item markdown
Customer Copy

12/12/23

SPECIAL SERVICES CUSTOMER INVOICE

 No. H0209-289974

Store 0209 NW DADE
5500 NW 167TH STREET
HIALEAH, FL 33014

Phone: (305) 624-1900
Salesperson: F7AODV3
Reviewer:

REPRINT

2024-03-01 00:04

SOLD TO

Name	ISLAM MOHAMMED	Phone 1	(561) 301-7191
Address	3832 PARKSIDE CIR	Phone 2	(561) 301-7191
		Company Name	AAA INVESTMENT OF PBC INC
City	PALM SPRINGS	Job Description	HISTORICAL OPA LOCKA
State	FL	Zip 33461	County DADE

CARRY OUT MERCHANDISE

MERCHANDISE AND SERVICE SUMMARY

We reserve the right to limit the quantities of merchandise sold to customers

REF # W01 SKU # 0000-515-664 The items listed in this section will be carried out of the store by the customer at time of sale.

STOCK MERCHANDISE CARRIED OUT:

REF #	SKU	QTY	UM	DESCRIPTION	PI	TAX	PRICE EACH	EXTENSION
R01	1001-069-562	1.00	EA	5/8 in. - 3/4 in. Zinc Female Hose Mender /		Y	$5.38	$5.38*
R02	1001-754-117	4.00	EA	2 in. x 12 in. x 12 ft. #1 Ground Contact Pressure-Treated Lumber /		Y	$35.67	$142.68*
							MERCHANDISE TOTAL:	$148.06
							END OF CARRY OUT MERCHANDISE - REF #W01	

TOTAL CHARGES OF ALL MERCHANDISE & SERVICES

Policy Id (PI):

: ;

'The Home Depot reserves the right to limit / deny returns. Please see the return policy sign in stores for details.'

ORDER TOTAL	$148.06
SALES TAX	$10.36
TOTAL	$158.42
BALANCE DUE	$0.00

END OF ORDER No. H0209-289974

-deck.
-joist

Approved.
7.15.24

Check your current order status online at www.homedepot.com/orderstatus

 No. H0209-289974

* Indicates item markdown
Customer Copy

12/15/23

SPECIAL SERVICES CUSTOMER INVOICE

 No. H0209-290344

Store 0209 NW DADE
5500 NW 167TH STREET
HIALEAH, FL 33014

Phone: (305) 624-1900
Salesperson: GXO3HZJ
Reviewer:

REPRINT

2024-03-01 00:06

SOLD TO

Name	ISLAM MOHAMMED	Phone 1	(561) 301-7191
Address	3832 PARKSIDE CIR	Phone 2	(561) 301-7191
		Company Name	AAA INVESTMENT OF PBC INC
City	PALM SPRINGS	Job Description	historic opa locka
State	FL	Zip 33461	County DADE

CARRY OUT MERCHANDISE

MERCHANDISE AND SERVICE SUMMARY

We reserve the right to limit the quantities of merchandise sold to customers

REF # W01 SKU # 0000-515-664 The items listed in this section will be carried out of the store by the customer at time of sale.

STOCK MERCHANDISE CARRIED OUT:

REF #	SKU	QTY	UM	DESCRIPTION	PI	TAX	PRICE EACH	EXTENSION
R01	0000-218-340	1.00	EA	16.9 fl. oz. Purified Drinking Water (24-Pack) /		N	$4.48	$4.48*
R02	1001-753-990	2.00	EA	2 in. x 8 in. x 8 ft. 2 Prime Ground Contact Pressure-Treated Southern Yellow Pine Lumber /		Y	$9.87	$19.74*
R03	1001-754-117	4.00	EA	2 in. x 12 in. x 12 ft. #1 Ground Contact Pressure-Treated Lumber /		Y	$35.67	$142.68*
							MERCHANDISE TOTAL:	$166.90

END OF CARRY OUT MERCHANDISE - REF #W01

TOTAL CHARGES OF ALL MERCHANDISE & SERVICES

Policy Id (PI):
: ;

'The Home Depot reserves the right to limit / deny returns. Please see the return policy sign in stores for details.'

ORDER TOTAL	$166.90
SALES TAX	$11.37
TOTAL	$178.27
BALANCE DUE	$0.00

END OF ORDER No. H0209-290344

- dock
- joist

Approved.
7.15.24

Check your current order status online at www.homedepot.com/orderstatus

* Indicates item markdown
Customer Copy

12/14/23

SPECIAL SERVICES CUSTOMER INVOICE

 No. H0209-290262

Store 0209 NW DADE
5500 NW 167TH STREET
HIALEAH, FL 33014

Phone: (305) 624-1900
Salesperson: F7AODV3
Reviewer:

REPRINT

2024-03-01 00:05

SOLD TO

Name	ISLAM MOHAMMED	Phone 1	(561) 301-7191
Address	3832 PARKSIDE CIR	Phone 2	(561) 301-7191
		Company Name	AAA INVESTMENT OF PBC INC
City	PALM SPRINGS	Job Description	HISTORICAL OPA LOCKA
State	FL	Zip 33461	County DADE

CARRY OUT MERCHANDISE

MERCHANDISE AND SERVICE SUMMARY

We reserve the right to limit the quantities of merchandise sold to customers

REF # W01 SKU # 0000-515-664 The items listed in this section will be carried out of the store by the customer at time of sale.

STOCK MERCHANDISE CARRIED OUT:

REF #	SKU	QTY	UM	DESCRIPTION	PI	TAX	PRICE EACH	EXTENSION
R01	0000-138-142	12.00	EA	12 oz. Gaps and Cracks Insulating Spray Foam Sealant /		Y	$3.94	$47.28*
R02	0000-421-791	24.00	EA	LIQUID NAILS FOR CONSTRUCTION 10.5 OZ. /		Y	$3.04	$72.96*
							MERCHANDISE TOTAL:	$120.24

END OF CARRY OUT MERCHANDISE - REF #W01

TOTAL CHARGES OF ALL MERCHANDISE & SERVICES

Policy Id (PI):
: ;

'The Home Depot reserves the right to limit / deny returns. Please see the return policy sign in stores for details.'

ORDER TOTAL	$120.24
SALES TAX	$8.42
TOTAL	$128.66
BALANCE DUE	$0.00

END OF ORDER No. H0209-290262

- deck

- joist

NOT CLEAR IF FOR JOISTS OR DECK. NOT APPROVED.

7.15.24

Check your current order status online at
www.homedepot.com/orderstatus

* Indicates item markdown
Customer Copy

SPECIAL SERVICES CUSTOMER INVOICE

1-6-2A

Page 1 of 2 **No. H0209-292312**

Store 0209 NW DADE
5500 NW 167TH STREET
HIALEAH, FL 33014

Phone: (305) 624-1900
Salesperson: F7AODV3
Reviewer:

REPRINT

2024-03-01 00:08

SOLD TO

Name	ISLAM MOHAMMED	Phone 1	(561) 301-7191
Address	3832 PARKSIDE CIR	Phone 2	(561) 301-7191
		Company Name	AAA INVESTMENT OF PBC INC
City	PALM SPRINGS	Job Description	HISTORICAL OPA LOCKA
State	FL	Zip 33461	County DADE

CARRY OUT MERCHANDISE

MERCHANDISE AND SERVICE SUMMARY

We reserve the right to limit the quantities of merchandise sold to customers

REF # W01 SKU # 0000-515-664 The items listed in this section will be carried out of the store by the customer at time of sale.

STOCK MERCHANDISE CARRIED OUT:

REF #	SKU	QTY	UM	DESCRIPTION	PI	TAX	PRICE EACH	EXTENSION
R01	1001-790-448	10.00	EA	19/32 in. x 4 ft. x 8 ft. CDX Ground Contact Pressure-Treated Pine Plywood /		Y	$44.08	$440.80
R02	0000-693-640	1.00	EA	Quick-Change Retractable Blade Utility Knives Knife with Blades Included (3-Piece) /		Y	$7.17	$7.17*
R03	0000-184-985	2.00	EA	Heavy-Duty Blades (5-Pack) /		Y	$2.22	$4.44*
R04	0000-524-266	1.00	EA	5/16 in. x 6 in. 2-Cutter SDS-PLUS Carbide Drill Bit /		Y	$8.97	$8.97*
R05	0000-218-340	2.00	EA	16.9 fl. oz. Purified Drinking Water (24-Pack) /		N	$4.48	$8.96*
R06	0000-421-791	24.00	EA	LIQUID NAILS FOR CONSTRUCTION 10.5 OZ. /		Y	$3.04	$72.96*
R07	0000-445-184	10.00	EA	1-5/8 in. x 10 ft. 25-Gauge Galvanized Steel Drywall Track /		Y	$9.61	$96.10*
R08	0000-651-307	2.00	EA	3-5/8 in. x 10 ft. 25-Gauge Galvanized Steel Drywall Wall Framing Track /		Y	$11.23	$22.46*
R09	0000-126-500	1.00	EA	1 qt. Acetone Thins Fiberglass Resins, Epoxy and Adhesives /		Y	$9.88	$9.88*
							MERCHANDISE TOTAL:	$671.74
							END OF CARRY OUT MERCHANDISE - REF #W01	

N/A

- deck.

- joist

Not clear if related to joist repairs

NOT APPROVED

7.15.24

Check your current order status online at www.homedepot.com/orderstatus

* Indicates item markdown
Customer Copy

Page 1 of 2 **No. H0209-292312**

TOTAL CHARGES OF ALL MERCHANDISE & SERVICES

Policy Id (PI):

: ;

'The Home Depot reserves the right to limit / deny returns. Please see the return policy sign in stores for details.'

ORDER TOTAL	$671.74
SALES TAX	$46.39
TOTAL	$718.13
BALANCE DUE	$0.00

END OF ORDER No. H0209-292312

1-8-24

SPECIAL SERVICES CUSTOMER INVOICE

Page 1 of 1 **No. H0209-292530**

Store 0209 NW DADE
5500 NW 167TH STREET
HIALEAH, FL 33014

Phone: (305) 624-1900
Salesperson: GXO3HZJ
Reviewer:

REPRINT

2024-03-01 00:10

SOLD TO

Name	**ISLAM MOHAMMED**	Phone 1	**(561) 301-7191**
Address	3832 PARKSIDE CIR	Phone 2	(561) 301-7191
		Company Name	AAA INVESTMENT OF PBC INC
City	PALM SPRINGS	Job Description	historic opa locka
State	FL	Zip 33461	County DADE

CARRY OUT MERCHANDISE

MERCHANDISE AND SERVICE SUMMARY

We reserve the right to limit the quantities of merchandise sold to customers

REF # W01 SKU # 0000-515-664 The items listed in this section will be carried out of the store by the customer at time of sale.

STOCK MERCHANDISE CARRIED OUT:

REF #	SKU	QTY	UM	DESCRIPTION	PI	TAX	PRICE EACH	EXTENSION
R01	1001-632-687	1.00	EA	2-3/8 in. 15 Brite Ring Shank Nails (3,000 per Box) /		Y	$12.60	$12.60*
							MERCHANDISE TOTAL:	$12.60
							END OF CARRY OUT MERCHANDISE - REF #W01	

TOTAL CHARGES OF ALL MERCHANDISE & SERVICES

Policy Id (PI):
: ;

'The Home Depot reserves the right to limit / deny returns. Please see the return policy sign in stores for details.'

ORDER TOTAL	$12.60
SALES TAX	$0.88
TOTAL	$13.48
BALANCE DUE	$0.00

END OF ORDER No. H0209-292530

-DECK

-JOIST

Not clear if for dock or joist repairs. Not approved

7.15.24

Check your current order status online at www.homedepot.com/orderstatus

Page 1 of 1 **No. H0209-292530**

* Indicates item markdown
Customer Copy

1/11/24

SPECIAL SERVICES CUSTOMER INVOICE

 No. H0209-292928

Store 0209 NW DADE
5500 NW 167TH STREET
HIALEAH, FL 33014

Phone: (305) 624-1900
Salesperson: F7AODV3
Reviewer:

REPRINT

2024-03-01 00:11

SOLD TO

Name: **ISLAM MOHAMMED**
Phone 1: **(561) 301-7191**
Address: 3832 PARKSIDE CIR
Phone 2: (561) 301-7191
Company Name: AAA INVESTMENT OF PBC INC
City: PALM SPRINGS
Job Description: HISTORICAL OPA LOCKA
State: FL Zip: 33461 County: DADE

CUSTOMER PICKUP #1

MERCHANDISE AND SERVICE SUMMARY

We reserve the right to limit the quantities of merchandise sold to customers

REF # W02 SKU # 0000-515-664 Customer Pickup / Will Call

STOCK MERCHANDISE TO BE PICKED UP:

REF #	SKU	QTY	UM	DESCRIPTION	PI	TAX	PRICE EACH	EXTENSION
R01	1001-790-448	6.00	EA	19/32 in. x 4 ft. x 8 ft. CDX Ground Contact Pressure-Treated Pine Plywood /		Y	$44.08	$264.48
R02	0000-218-340	1.00	EA	16.9 fl. oz. Purified Drinking Water (24-Pack) /		N	$4.48	$4.48*

SCHEDULED PICKUP DATE: 01/11/2024

MERCHANDISE TOTAL: $268.96

END OF CUSTOMER PICKUP - REF #W02

TOTAL CHARGES OF ALL MERCHANDISE & SERVICES

Policy Id (PI):
: ;

'The Home Depot reserves the right to limit / deny returns. Please see the return policy sign in stores for details.'

ORDER TOTAL	$268.96
SALES TAX	$18.51
TOTAL	$287.47
BALANCE DUE	$0.00

END OF ORDER No. H0209-292928

NOT VALID FOR MERCHANDISE CARRY-OUT

DECK

Part of project scope.
Not approved.
7.15.24

WILL-CALL MERCHANDISE PICK-UP
Will-Call items will be held in the store for 7 days only.

Check your current order status online at www.homedepot.com/orderstatus

FOR WILL CALL
MERCHANDISE PICK-UP
PROCEED TO WILL CALL OR
SERVICE DESK AREA
(Pro Customers, Proceed To The Pro Desk)

* Indicates item markdown
Customer Copy

Page 1 of 1 **No. H0209-292928**

SPECIAL SERVICES CUSTOMER INVOICE

1/12/24

Page 1 of 2 **No. H0209-293081**

Store 0209 NW DADE
5500 NW 167TH STREET
HIALEAH, FL 33014

Phone: (305) 624-1900
Salesperson: LJM1OT8
Reviewer:

REPRINT

2024-03-01 00:12

SOLD TO

Name	ISLAM MOHAMMED	Phone 1	(561) 301-7191
Address	3832 PARKSIDE CIR	Phone 2	(561) 301-7191
		Company Name	AAA INVESTMENT OF PBC INC
City	PALM SPRINGS	Job Description	HISTORICAL OPA LOCKA
State	FL	Zip 33461	County DADE

CARRY OUT MERCHANDISE

MERCHANDISE AND SERVICE SUMMARY

We reserve the right to limit the quantities of merchandise sold to customers

REF # W01 SKU # 0000-515-664 The items listed in this section will be carried out of the store by the customer at time of sale.

STOCK MERCHANDISE CARRIED OUT:

REF #	SKU	QTY	UM	DESCRIPTION	PI	TAX	PRICE EACH	EXTENSION
R01	0000-445-184	2.00	EA	1-5/8 in. x 10 ft. 25-Gauge Galvanized Steel Drywall Track /		Y	$9.61	$19.22*
R02	0000-651-307	4.00	EA	3-5/8 in. x 10 ft. 25-Gauge Galvanized Steel Drywall Wall Framing Track /		Y	$11.23	$44.92*
R03	0000-915-245	3.00	RL	1.89 in. x 50 yd. 322 Multi-Purpose HVAC Foil Sealer Duct Tape /		Y	$11.34	$34.02*
R04	0000-273-646	1.00	EA	4 in. x 3/8 in. High-Density Foam Mini Paint Roller (5-Pack) /		Y	$9.88	$9.88*
R05	0000-330-388	2.00	EA	1-5/8 in. x 10 ft. 25-Gauge Galvanized Steel Drywall Stud /		Y	$11.41	$22.82*
R06	1001-754-130	5.00	EA	3/4 in. x 4 ft. x 8 ft. Ground Contact Pressure Treated Pine Performance Rated Sheathing Plywood /		Y	$49.28	$246.40
R07	1005-752-699	1.00	EA	1/4 in. x 3-3/4 in. Star Flat-Head Concrete Anchors (25-Pack) /		Y	$17.97	$17.97*
							MERCHANDISE TOTAL:	$395.23
							END OF CARRY OUT MERCHANDISE - REF #W01	

NA

DECK

-joist

Not applicable.
Deck part of proyect scope.

NOT APPROVED
7.15.24

Check your current order status online at www.homedepot.com/orderstatus

Page 1 of 2 **No. H0209-293081**

* Indicates item markdown
Customer Copy

TOTAL CHARGES OF ALL MERCHANDISE & SERVICES

Policy Id (PI):
: ;

'The Home Depot reserves the right to limit / deny returns. Please see the return policy sign in stores for details.'

ORDER TOTAL	$395.23
SALES TAX	$27.67
TOTAL	$422.90
BALANCE DUE	$0.00

END OF ORDER No. H0209-293081

1.16.24

SPECIAL SERVICES CUSTOMER INVOICE

 No. H0209-293461

Store 0209 NW DADE
5500 NW 167TH STREET
HIALEAH, FL 33014

Phone: (305) 624-1900
Salesperson: LJM1OT8
Reviewer:

REPRINT

2024-03-01 00:13

SOLD TO

Name	ISLAM MOHAMMED	Phone 1	(561) 301-7191
Address	3832 PARKSIDE CIR	Phone 2	(561) 301-7191
		Company Name	AAA INVESTMENT OF PBC INC
City	PALM SPRINGS	Job Description	Historical Opa Locka
State	FL	Zip 33461	County DADE

CARRY OUT MERCHANDISE

MERCHANDISE AND SERVICE SUMMARY

We reserve the right to limit the quantities of merchandise sold to customers

REF # W01 SKU # 0000-515-664 The items listed in this section will be carried out of the store by the customer at time of sale.

STOCK MERCHANDISE CARRIED OUT:

REF #	SKU	QTY	UM	DESCRIPTION	PI	TAX	PRICE EACH	EXTENSION
R01	1001-790-448	3.00	EA	19/32 in. x 4 ft. x 8 ft. CDX Ground Contact Pressure-Treated Pine Plywood /		Y	$44.08	$132.24
R02	0000-915-245	3.00	RL	1.89 in. x 50 yd. 322 Multi-Purpose HVAC Foil Sealer Duct Tape /		Y	$11.34	$34.02*
R03	0000-479-697	1.00	EA	Grip Rite #6 x 2 in. Philips Bugle-Head Coarse Thread Sharp Point Drywall Screws (1 lb./Pack) /		Y	$6.55	$6.55*

MERCHANDISE TOTAL: $172.81

END OF CARRY OUT MERCHANDISE - REF #W01

TOTAL CHARGES OF ALL MERCHANDISE & SERVICES

Policy Id (PI):
: ;

'The Home Depot reserves the right to limit / deny returns. Please see the return policy sign in stores for details.'

ORDER TOTAL	$172.81
SALES TAX	$12.10
TOTAL	$184.91
BALANCE DUE	$0.00

END OF ORDER No. H0209-293461

DECK
-Joist

Not applicable. Part of project scope. Not approved. 7.15.24

Check your current order status online at www.homedepot.com/orderstatus

* Indicates item markdown
Customer Copy

1.23.24

SPECIAL SERVICES CUSTOMER INVOICE

 No. H0209-294369

Store 0209 NW DADE
5500 NW 167TH STREET
HIALEAH, FL 33014

Phone: (305) 624-1900
Salesperson: LJM1OT8
Reviewer:

REPRINT

2024-03-01 00:17

SOLD TO

Name	ISLAM MOHAMMED	Phone 1	(561) 301-7191
Address	3832 PARKSIDE CIR	Phone 2	(561) 301-7191
		Company Name	AAA INVESTMENT OF PBC INC
City	PALM SPRINGS	Job Description	Historical Opa Locka
State	FL	Zip 33461	County DADE

CARRY OUT MERCHANDISE

MERCHANDISE AND SERVICE SUMMARY

We reserve the right to limit the quantities of merchandise sold to customers

REF # W01 SKU # 0000-515-664 The items listed in this section will be carried out of the store by the customer at time of sale.

STOCK MERCHANDISE CARRIED OUT:

REF #	SKU	QTY	UM	DESCRIPTION	PI	TAX	PRICE EACH	EXTENSION
R01	1001-753-967	3.00	EA	1 in. x 6 in. x 12 ft. Ground Contact Pressure-Treated Board /		Y	$8.42	$25.26*
R02	0000-852-570	6.00	EA	2 in. x 12 in. x 8 ft. #2 Prime Kiln-Dried Southern Yellow Pine Lumber /		Y	$13.69	$82.14*
R03	1005-752-813	1.00	PA	Concrebond 3.5 Gal. Blue Concrete Bonding Agent and Adhesive /		Y	$51.95	$51.95*
R04	0000-781-657	1.00	EA	6 in. 24 TPI Thin Metal Cutting SAWZALL Reciprocating Saw Blades (5-Pack) /		Y	$12.12	$12.12*
R05	1001-287-210	~~1.00~~	~~EA~~	~~Premium 3 in. Polyester Trylon Flat Cut Beaver Tail General Purpose Paint~~ Paint Brush / Not applicable		Y	~~$12.57~~	~~$12.57*~~
R06	0000-479-859	1.00	EA	#8 x 3 in. Philips Bugle-Head Coarse Thread Sharp Point Drywall Screws (1 lb.-Pack) /		Y	$6.55	$6.55*
R07	1000-004-428	3.00	EA	General Purpose Utility Blades (5-Pack) /		Y	$1.33	$3.99*
R08	0000-802-556	1.00	EA	128 oz. Original Wood Glue /		Y	$19.60	$19.60*
R09	1010-193-201	1.00	EA	1 gal., 7 lbs. Original Filler /		Y	$53.99	$53.99*
R10	0000-245-521	1.00	EA	5 in. 60-Grit Universal Hole Random Orbital Sanding Disc with Hook and Lock Backing (50-Pack) /		Y	$17.97	$17.97*

MERCHANDISE TOTAL: $286.14

END OF CARRY OUT MERCHANDISE - REF #W01

- Joist

Check your current order status online at www.homedepot.com/orderstatus

 No. H0209-294369

* Indicates item markdown
Customer Copy

TOTAL CHARGES OF ALL MERCHANDISE & SERVICES

Policy Id (PI):
: ;

'The Home Depot reserves the right to limit / deny returns. Please see the return policy sign in stores for details.'

ORDER TOTAL	$286.14
SALES TAX	$20.03
TOTAL	$306.17
BALANCE DUE	$0.00

END OF ORDER No. H0209-294369

$ 286.16
less paint brush. 12.57
273.57
tax 19.15
$ 292.72 approved

7.15.24

SPECIAL SERVICES CUSTOMER INVOICE

1.2624

Page 1 of 1 **No. H0209-294833**

Store 0209 NW DADE
5500 NW 167TH STREET
HIALEAH, FL 33014

Phone: (305) 624-1900
Salesperson: LJM1OT8
Reviewer:

REPRINT

2024-03-01 00:19

SOLD TO

Name	**ISLAM MOHAMMED**	Phone 1	**(561) 301-7191**
Address	3832 PARKSIDE CIR	Phone 2	(561) 301-7191
		Company Name	AAA INVESTMENT OF PBC INC
City	PALM SPRINGS	Job Description	Historical Opa Locka
State	FL	Zip 33461	County DADE

CARRY OUT MERCHANDISE

MERCHANDISE AND SERVICE SUMMARY

We reserve the right to limit the quantities of merchandise sold to customers

REF # W01 SKU # 0000-515-664 The items listed in this section will be carried out of the store by the customer at time of sale.

STOCK MERCHANDISE CARRIED OUT:

REF #	SKU	QTY	UM	DESCRIPTION	PI	TAX	PRICE EACH	EXTENSION
R01	0000-864-393	1.00	EA	2-1/4 x .099 in. - Gauge 15 Wire Smooth Shank Framing Nails (4,500 per Box) /		Y	$66.58	$66.58*
R02	1005-752-813	1.00	PA	Concrebond 3.5 Gal. Blue Concrete Bonding Agent and Adhesive /		Y	$51.95	$51.95*
R03	0000-497-673	~~3.00~~	~~EA~~	~~9 in. x 1-1/4 in. High-Density Polyester Knit Paint Roller Cover /~~		~~Y~~	~~$4.65~~	~~$13.95*~~
R04	1001-552-399	1.00	EA	Universal 1-1/4 in. Wood Flush Cutting Oscillating Multi-Tool Blade (1-Piece) /		Y	$11.67	$11.67*
R05	0000-166-022	5.00	EA	3/8 in. x 4 ft. x 8 ft. Sanded Pine Plywood /		Y	$35.62	$178.10*
							MERCHANDISE TOTAL:	$322.25
							END OF CARRY OUT MERCHANDISE - REF #W01	

TOTAL CHARGES OF ALL MERCHANDISE & SERVICES

Policy Id (PI):
: ;

'The Home Depot reserves the right to limit / deny returns. Please see the return policy sign in stores for details.'

ORDER TOTAL	$322.25
SALES TAX	$22.56
TOTAL	$344.81
BALANCE DUE	$0.00

END OF ORDER No. H0209-294833

[redacted] deck.

Not approved.
Part of project scope.
7.15.24.

Check your current order status online at www.homedepot.com/orderstatus

* Indicates item markdown
Customer Copy

Page 1 of 1 **No. H0209-294833**

HCH-CO-02_3rd Floor Decking and Joist Repair

Item No.	Joist Repairs	Amount
1	Materials	~~$1,842.67~~ 932.01
2	Labor 2 Persons/Day/$35/Hr/2.5 weeks/Old Plywood Removal/Joist Repairs	$7,280.00 ✓
	Joist Total	**$9,122.67** 8212.01

Item No	Deck Repairs	Amount
1	Materials	$3,000.00
2	Labor 2 Person/Day/$35/Hr/1.5 Week/50 pieces plywood installation	$3,920.00
	Decking Total NOT APPROVED Part of scope.	**$6,920.00**
	Joist & Decking Repair Total Sum	**$16,042.67**
	Minus Bid Amount for Decking 8 Plywoods (8x$200/per sheet)	**-$1,600.00**
	Change Order Total	~~**$14,442.67**~~

8212.01

7.15.24.

2780 S.W. DOUGLAS ROAD, SUITE 302, MIAMI, FLORIDA 33133. VOICE 305.445.3765. . AR 14445 ARCHITECTURE. . PLANNING. INTERIORS

July 15, 2024

Adelina Gross
City of Opa-locka
780 Fisherman Street
Opa-locka, FL 33054
Via Email

Re: Historic Opa-locka City Hall
RCO # 4 _ In wall water Spigot

Dear Adelina:

We are in receipt of RCO # 004 from DC& D requesting additional costs of $**2,500** to run a new underground copper line to the courtyard water fountain spigot at Historic Opa-locka City Hall Project.

Due to no water supply in the vicinity for fountain refill, there was a need to install water spigots for the area near the fountain. Costs as presented are acceptable.

The additional cost of **$2,500** is recommended to the **City of Opa-locka** for final approval.

Sincerely:

M. C. Harry and Associates, Inc.

Lourdes Solera, FAIA
Principal / Project Manager

Cc: Carlos Gonzalez / City of Opa-locka
Mohammed S Islam / DC&D
Juan Corredor / MCHA

2780 S.W. DOUGLAS ROAD, SUITE 302, MIAMI, FLORIDA 33133. VOICE 305.445.3765. . AR 14445 ARCHITECTURE. . PLANNING. INTERIORS

July 15, 2024

Adelina Gross
City of Opa-locka
780 Fisherman Street
Opa-locka, FL 33054
Via Email

Re: Historic Opa-locka City Hall
RCO # 6 _ Domes Repair

Dear Adelina

We are in receipt of RCO # 06 from DC&D requesting additional costs of $**21,017.45** to repair five domes and improve their overall condition at Historic Opa-locka City Hall Project.

During inspection of the domes to provide waterproofing as per scope, it was discovered that all the domes had some level of damage to the flooring inside the dome, damaged due to termites and water intrusion. Prior to waterproofing it was necessary to repair the damaged and rotted wood . Costs as presented and 48 days extension are acceptable. .

The additional cost of **$21,017.45** is recommended to the **City of Opa-locka** for final approval.

Sincerely:

M. C. Harry and Associates, Inc.

Lourdes Solera, FAIA
Principal / Project Manager

Cc: Mohammad Islan / DC&D
Carlos Gonzalez / City of Opa-locka
Juan Corredor / MCHA

2780 S.W. DOUGLAS ROAD, SUITE 302, MIAMI, FLORIDA 33133. VOICE 305.445.3765. AR 14445 ARCHITECTURE. . PLANNING. INTERIORS

July 15, 2024

Mohammed S Islam
Diamanti Construction & Development, Inc
524 N H Street
Lake Worth Beach, FL 33460
Via Email

Re: Historic Opa-locka City Hall
RCO # 7 _ Stucco Repairs at Electric Tower, Dome and walls

Dear Mohammed:

We are in receipt of RCO # 07 from DC& D requesting additional costs of $**86,142.36** and 12 week time extension to remove the old paint, repair stucco cracks at Historic Opa-locka City Hall Project. Costs and time presenter are separate for Electric Tower, Dome, and overall building wall stucco repair.

Electric Tower Structural Repair - $6666.96 – 7 day extension

Removal of an overgrown tree on the southeast parapet wall of the electric tower created a huge hole in the wall and structural damage after removal. DC& D Installed rebar with epoxy to hold it on place. Although the costs and days presented appear acceptable, MCHA requires backup for equipment rental; what equipment was rented.

The additional cost of **$6,666.96** recommendation is **pending** backup equipment information. Additional days are acceptable.

Dome Stucco Repair - $33,678.90 – 28 day extension

Termite and water intrusion thru the dome membrane damaged the plywood forming the dome. This condition was discovered during preparation for stucco work which needed to be repaired before the stucco work. (RCO $6 addresses the wood repairs for the domes) All five domes were affected in different locations. Additional stucco was needed to fix the damage locations of all five domes. Although the costs and days presented appear acceptable, MCHA requires backup for equipment rental; what equipment was rented.

The additional cost of **$33,678.90** recommendation is **pending** backup equipment information. Additional days are acceptable.

Wall Stucco Repair: $45,796.50 – 28 day extension

Stucco Repair notes on Sheets A5.01 thru A5.03 indicated scope of work for stucco repairs and patch. No specific quantity was identified. Once scope of work was begun by DC&D, more work than anticipated ways found by the general contractor. However no RFI was sent to AE to address concerns or how to

accommodate existing conditions. DC&D redid all the stucco on the walls without AE or owner approval. Information provided does not clarify extent of work for labor and materials beyond original scope. DC&D needs to provide adequate backup including equipment rental costs along with comparison of original schedule of time to do the work versus the requested 28 days.

The additional cost of **$45,796.50** is not recommended to the **City of Opa-Locka**. DC& D should provide more backup to substantiate the added cost.

Sincerely:

M. C. Harry and Associates, Inc.

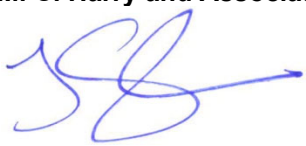

Lourdes Solera, FAIA
Principal / Project Manager

Cc: Adelina Gross / City of Opa-locka
Carlos Gonzalez / City of Opa-locka
Juan Corredor / MCHA

Sponsored by: Interim City Manager

RESOLUTION NO. 24-XXX

A RESOLUTION OF THE CITY COMMISSION OF THE CITY OF OPA-LOCKA, FLORIDA, AUTHORIZING THE CITY MANAGER TO EXECUTE AN AGREEMENT WITH SOLE SOURCE PROVIDER WASTEWATER ACQUISITION LLC D/B/A IN-PIPE TECHNOLOGY, INC TO CONTINUE THE PROGRAM TO ELIMINATE FATS, OIL, AND GREASE (FOG) IN THE CITY'S SANITARY SEWER SYSTEM; PROVIDING FOR INCORPORATION OF RECITALS; PROVIDING FOR AN EFFECTIVE DATE

WHEREAS, pursuant to Resolution 24-011, the City of Opa-Locka ("City") initiated a FY2024 Pilot Program to eliminate Fats, Oil, and Grease (FOG) in the City's sanitary sewer system; and

WHEREAS, the Pilot Program was instrumental in deterring accumulation of FOG; and

WHEREAS, Fats, Oil and Grease (FOG) is estimated to account for ninety-five percent (95%) of the sewer stoppages and pump station failures; and

WHEREAS, based on the recently completed pilot program during Fiscal Year 2024 -2025, there were less sewer stoppages than prior years; and

WHEREAS, the continued mitigation of FOG in the City's sanitary sewer system is important for the City; and

WHEREAS, the continuation of the program is estimated to cost Ninety-Six Thousand Dollars ($96,000.00); and

WHEREAS, Wastewater Acquisition LLC d/b/a In-Pipe Technology, Inc is a sole source provider that utilizes the science of dosing with microbes to eliminate FOG their microbe dosing system is a self-contained unit that can be deployed in a sewer manhole; and

WHEREAS, other systems require weekly or monthly direct dispensing of liquid chemicals which are corrosive and present a safety/health hazard for City employees. Additionally, microbes used in the treatment process reach end-of-life in the wet well of the pump station, since they cannot survive in an environment devoid of oxygen, which is the case in a force main; and

WHEREAS, other treatment processes include elements which continue to remain active even after arriving at the Miami-Dade County ("County") wastewater treatment facilities and would not be permitted by the County due to the disruptive impact of these elements on treatment facilities operations; and

WHEREAS, the City Commission finds it in the best interest of the City and its residents to authorize the Interim City Manager to enter into an agreement, attached hereto as Exhibit "A", with Sole Source provider Wastewater Acquisition LLC d/b/a In-Pipe Technology, Inc to continue the program to eliminate Fats, Oil, and Grease (FOG) in the City's sanitary sewer system.

NOW, THEREFORE, BE IT DULY RESOLVED BY THE CITY COMMISSION OF THE CITY OF OPA- LOCKA, FLORIDA:

SECTION 1. The recitals to the preamble herein are incorporated by reference.

SECTION 2. The City Commission of the City of Opa-Locka, Florida, hereby authorizes the Interim City Manager to enter into an agreement, attached hereto as Exhibit "A", with Sole Source provider Wastewater Acquisition LLC d/b/a In-Pipe Technology, Inc to continue the program to eliminate Fats, Oil, and Grease (FOG) in the City's sanitary sewer system.

SECTION 3. Sections of this Resolution may be renumbered or re-lettered and corrections of typographical errors which do not affect the intent may be authorized by the City Manager, following review by the City Attorney and without need of public hearing, by filing a corrected copy of same with the City.

SECTION 4. This Resolution shall take effect upon the adoption and is subject to the approval of the Governor or Governor's Designee.

PASSED and **ADOPTED** this _____ day of _____, 2024.

_____
John Taylor, Mayor

ATTEST:

_____
Joanna Flores, City Clerk

APPROVED AS TO FORM AND LEGAL SUFFICIENCY:

_____
Burnadette Norris-Weeks, P.A.
City Attorney

Moved by: _____

Seconded by: _____

VOTE:

Commissioner Bass	_____
Commissioner Santiago	_____
Commissioner Ervin	_____
Vice Mayor Kelley	_____
Mayor Taylor	_____

City of Opa-locka
Agenda Cover Memo

Department Director:	Airia Austin			**Department Director Signature:**				
City Manager:	Sha'mecca Lawson			**CM Signature**				
Commission Meeting Date:	12.11.2024		**Item Type:** *(Enter X in box)*	**Resolution**	**Ordinance**		**Other**	
					X			
Fiscal Impact: *(Enter X in box)*	**Yes**	**No**	**Resolution Reading:** *(Enter X in box)*		**1st Reading**		**2nd Reading**	
					X			
	X		**Public Hearing:** *(Enter X in box)*		**Yes**	**No**	**Yes**	**No**
					X		X	
Funding Source: *Account#:*	*(Enter Fund & Dept)* Ex: N/A See Financial Impact section below		**Advertising Requirement:** *(Enter X in box)*		**Yes**		**No**	
					X			
ILA Required: *(Enter X in box)*	**Yes**	**No**	**RFP/RFQ/Bid#:**					
	X							
Strategic Plan Related *(Enter X in box)*	**Yes**	**No**	**Strategic Plan Priority Area:** **Enhance Organizational** ☐ **Bus. & Economic Dev** ■ **Public Safety** ☐ **Quality of Education** ☐ **Qual. of Life & City Image** ☐ **Communication** ☐		**Strategic Plan Obj./Strategy:** *(list the specific objective/strategy this item will address)*			
	X							
Sponsor Name	Interim City Manager		**Department:** Planning & Community Development		City Manager			

Short Title:

A RESOLUTION OF THE CITY COMMISSION OF THE CITY OF OPA-LOCKA AUTHORIZING THE INTERIM CITY MANAGER TO CONTINUE THE PROGRAM TO ELIMINATE FATS, OILS, AND GREASE (FOG) IN THE CITY'S SANITARY SEWER SYSTEM.

Staff Summary:

Fats, Oil and Grease (FOG) accounts for 95% of the sewer stoppages and pump station failures. The continuations mitigating of this concern are a plus for the city. Based on the recently completed pilot program in FY-24 there were less sewer stoppages. We are looking forward to continuing this program in FY-25 at a cost of not to exceed $96,000.00. In-Pipe Technology is a sole source provider that utilizes the science of dosing with microbes to eliminate FOG.

Their microbe dosing system is self-contained unit that can be deployed in a sewer manhole. Other system requires weekly or monthly direct dispensing of liquid chemicals which are corrosive and present a safety/health hazard for City employees. Additionally, microbes used in the treatment process reach end-of life in the wet well of the pump station, since they cannot survive in an environment devoid of oxygen, which is the case in a force main. However, other treatment processes include elements which continue to remain active even after arriving at the County wastewater treatment facilities and would not be permitted by the County due to the disruptive impact of these elements on treatment facilities operations.

BACKGROUND: The City is having increased problems with FOG in the sanitary sewer collection system. This problem is more prevalent in the areas with multifamily dwellings where more often Fats, Oils and Grease are disposed of improperly directly into the drains, which then coagulates and forms a solid lining in the sewer mains and laterals that results in clogs. The FY2024 Pilot Program approved under resolution 24-011 was instrumental in deterring accumulation of FOG.

Financial Impact: This item was included in the FY 25 adopted budget funded through the Sewer Division Other Professional Account – 35-535340 which has a current balance of $224,694. This is an annual contract and therefore does not have a long-term on-going impact on any City fund balance.

Proposed Action:

Staff recommend the City Commission approve the continuation of FOG Program with In-Pipe Technology for $96,000.00.

Attachment:

Agenda
In-Pipe Technology Proposal

CITY OF OPA-LOCKA AGREEMENT FOR MICROBIOLOGICAL TREATMENT SERVICES TO CONTINUE THE PROGRAM TO ELIMINATE FATS, OIL, AND GREASE (FOG) IN THE CITY'S SANITARY SEWER SYSTEM

This Agreement is made this ____ day of _____, 2024, between the City of Opa-Locka, a municipal corporation organized and existing under the laws of the State of Florida and whose address is 780 Fisherman Street, Opa-Locka, Florida 33054 (the **"City"),** and Wastewater Acquisition LLC d/b/a In-Pipe Technology, Inc. ("Contractor") whose address is 725 N. Central Avenue, Wood Dale, IL 60191 (the **"Contractor").**

WITNESSETH

WHEREAS, Wastewater Acquisition LLC d/b/a In-Pipe Technology, Inc., located in Wood Dale, Illinois is a sole source that utilizes the science of dosing with microbes to eliminate Fats, Oil, and Grease (FOG) their microbe dosing system is a self-contained unit that can be deployed in a sewer manhole; and

WHEREAS, the Contractor desires to enter into this Agreement ("Agreement") with City to provide microbiological treatment services to continue the program to eliminate Fats, Oil, and Grease (FOG) in the City's sanitary sewer system. (the "Project"); and

NOW THEREFORE, in consideration of the mutual covenants set forth in this Agreement, the receipt and sufficiency of which is acknowledged, the parties agree as follows:

Section 1. Term. The term of this Agreement commences upon fully execution of this agreement and continues for one year, unless terminated earlier by its terms.

Section 2. Contract Terms. The Contractor agrees to provide the City with microbiological treatment services to continue the program to eliminate Fats, Oil, and Grease (FOG) in the City's sanitary sewer system. in accordance with the City's requirements as set forth herein and the Contractor's Sales Quote, attached hereto

and incorporated herein as Exhibit "A". The exhibits are incorporated into this Agreement for all purposes, and are collectively referred to as the "Contract Documents", and represent the entire agreement between the parties. In the event of conflict between or among the Contract Documents, the order of priority shall be: this Agreement and the Contractor's accepted proposal.

Section 3. Scope of Work

The following provisions are included:

A. City shall pay Contractor no more than the prices set forth in the Contract Documents and in accordance with the provisions of the Contract Documents. If the City requires services not covered by unit prices already made a part of the Contract Documents, the Contractor shall submit a detailed written proposal to the authorized City representative before providing any such services. For these purposes, Airia Austin, as Public Works Director, shall be the City Representative and may be reached at 305-953-2868 Ext 1450.

B. If permits are required, Contractor shall submit complete and accurate permit applications to all applicable permitting agencies within ten workdays of receiving from the City all documents necessary to file such permit applications. The City shall pay all permit and related fees directly to the permitting agencies, including any permit fees charged by the City.

C. Contractor shall not commence work on the Project unless and until the requirements for insurance have been fully met by Contractor and appropriate evidence thereof, in the City's sole discretion, has been provided to and approved by the City.

Section 4. Insurance.

A. The CONTRACTOR shall not commence work under this contract until it has obtained all insurance required under this paragraph and such insurance has been approved by the CITY nor shall the CONTRACTOR allow any Subcontractor to commence work on his sub-contract until all similar such insurance required of the subcontractor has been obtained and approved.

B. Certificates of insurance, reflecting evidence of the required insurance, shall be filed with the CITY prior to the commencement of the work. These Certificates shall contain a provision that coverage afforded under these policies will not be canceled or

modified until at least thirty days (30) prior written notice has been given to the CITY. Policies shall be issued by companies authorized to do business under the laws of the State of Florida.

C. Financial Ratings must be no less than "A" in the latest edition of "Bests Key Rating Guide", published by A.M. Best Guide.

D. Insurance shall be in force until all work required to be performed under the terms of the Contract is satisfactorily completed as evidenced by the formal acceptance by the CITY. In the event the insurance certificate provided indicates that the insurance shall terminate and lapse during the period of this contract, then in that event, the CONTRACTOR shall furnish, at least thirty days (30) prior to the expiration of the date or modification of such insurance, a renewed certificate of insurance as proof that equal and like coverage for the balance of the period of the contract and extension thereunder is in effect. The CONTRACTOR shall not continue to work pursuant to this contract unless all required insurance remains in full force and effect.

E. Commercial General Liability Insurance Covering premises-operations, product-completed operations, independent contractors, and contractual liability. Limits: Combined single limit bodily injury/property damage $1,000,000 per occurrence ($2,000,000 Aggregate).

F. Automobile Liability Insurance covering all owned, hired and non-owned automobile equipment, and other vehicles used by the successful bidder in the performance of the work with limits not less than $1,000,000 per Occurrence/$1,000,000 Aggregate (Including Policy Number and Policy Period.

G. Workers' Compensation coverage with statutory limits and Employer's Liability coverage with limits not less than $100,000 (Including Policy Number and Policy Period);

H. A certificate naming the City as an "additional insured" for General Liability is required.

I. Certificate holder should be addressed as follows: City of Opa-Locka 780 Fisherman Street, 4th Floor Opa-Locka, FL 33054

J. The CONTRACTOR shall hold the CITY, the City of Opa-Locka their agents, and employees, harmless on account of claims for damages to persons, property

or premises arising out of the operations to complete this Agreement and name the CITY as an additional insured under their policy.

K. The CITY reserves the right to require any other insurance coverage it deems necessary depending upon the exposures.

Section 5. Assignment. Neither party may assign its rights or obligations under this Agreement without the consent of the other.

Section 6. Notice. Notice hereunder shall be provided in writing by certified mail, return receipt requested, or customarily used overnight transmission with proof of delivery, to the following parties, with mandatory copies, as provided below:

For City:	Sha'mecca Lawson, Interim City Manager City of Opa-Locka 780 Fisherman Street Opa-Locka, Florida, Florida 33054
Copy To:	Burnadette Norris-Weeks, Esq. City Attorney Burnadette Norris-Weeks, P.A. 401 NW 7th Avenue Fort Lauderdale, Florida 33311
For Contractor:	Francis John Williams Wastewater Acquisition LLC d/b/a In-Pipe Technology, Inc. 725 N. Central Avenue, Wood Dale, IL 60191
Copy To:	Daniel Williamson Wastewater Acquisition LLC d/b/a In-Pipe Technology, Inc.725 N. Central Avenue, Wood Dale, IL 60191

Section 7. Severability. This Agreement sets forth the entire agreement between Contractor and City with respect to the subject matter of this Agreement. This Agreement supersedes all prior and contemporaneous negotiations, understandings and agreements, written or oral, between the parties. This Agreement may not be modified except by the parties' mutual agreement set forth in writing and signed by the parties.

IF CONSULTANT HAS QUESTIONS REGARDING THE APPLICATION OF CHAPTER 119, FLORIDA STATUTES, TO CONSULTANT'S DUTY TO PROVIDE PUBLIC RECORDS RELATING TO THIS AGREEMENT, CONTACT THE CUSTODIAN OF

PUBLIC RECORDS AT (305) 953-2800, email: jflores@Opalockafl.gov OR BY MAIL: City of Opa-locka – City Clerk's Office, 780 Fisherman Street, Opa-Locka, FL 33054

Section 8. E-verify. In accordance with Florida Statutes §448.095, the Contractor, prior to commencement of services or payment by the City, will provide to the City proof of participation/ enrollment in the EVerify system of the Department of Homeland Security. Evidence of participation/enrollment will be a printout of the Company's "Company Profile" page from the Everify system. Failure to be continually enrolled and participating in the E-Verify program will be a breach of contract which will be grounds for immediate termination of the contract by the City. The Consultant will not hire any employee who has not been vetted through E-Verify. The Contractor may not subcontract any work for the City to any subcontractor that has not provided an affidavit stating that the subcontractor does not employ, contract with or subcontract with an unauthorized alien.

IN WITNESS WHEREOF, the parties hereto have accepted, made and executed this Agreement upon the terms and conditions above stated on the day and year first above written.

[REMAINDER OF PAGE LEFT INTENTIONALLY BLANK]

CITY: City of Opa-Locka

By:_____
Sha'mecca Lawson, Interim City Manager

Date:_____

By:_____
Joanna Flores, City Clerk

APPROVED AS TO FORM AND LEGAL SUFFICIENCYFOR THE USE OF AND RELIANCE BY THE CITY OF OPA-LOCKA ONLY:

By:_____
City Attorney
Burnadette Norris-Weeks, P.A.

CONTRACTOR:
WASTEWATER ACQUISITION LLC D/B/A IN-PIPE TECHNOLOGY, INC.

By: _____ Witness:_____

_____ _____
PRINT NAME

Date:_____

_____
TITLE

Date:_____

IN-PIPE TECHNOLOGY Because Efficiency Counts

October 23, 2023

Mr. Airia Austin
Public Works Director
City of Opa-locka
780 Fisherman Street
Opa-locka, FL 33054

Dear Mr. Austin,

This letter is to confirm that the proprietary lift station odor control method used by In-Pipe Technology is a sole source product, provided exclusively by In-Pipe Technology. We are not aware of any other company that provides complete treatment of noxious gases (including hydrogen sulfide) exiting lift stations in substantially the same manner. This product must be purchased directly by the City from In-Pipe Technology. There are no agents or dealers authorized to resell this product in the State of Florida.

We are not aware of any similar or like product available to The City of Opa-locka would serve the same purpose or function.

If you desire additional information, don't hesitate to contact me at (630) 509-2488 at any time or visit our website at www.in-pipe.com. Thank you for your interest in our products and services.

Sincerely,

Douglas G Fagans
Chief Commercial Officer

725 N. Central Ave., Wood Dale, IL 60191 • Tel. (630) 509-2488 • Web: www.in-pipe.com

IN-PIPE TECHNOLOGY Because Efficiency Counts

PROPOSAL TO:

City of Opa-Locka

Fats, Oil, and Grease (FOG) Control

Proposal No. 2024-WA136

Date: October 7, 2024

IN-PIPE TECHNOLOGY Because Efficiency Counts

November 20, 2024

Mr. Airia. Austin
Public Works & Utilities Director
City of Opa-Locka
780 Fisherman Street
Opa-Locka, FL. 33054

Re: IN-PIPE Technology – Opa-Locka
Proposal No. 2024-WA142

Dear Mr. Austin,

On behalf of IN-PIPE Technology (IPT) we are pleased to submit our proposal to the City of Opa-Locka for your consideration for our biologically-based system for the elimination of buildups of Fats, Oils & Grease (FOG) in the collection system.

This proposal outlines the cost of a 12 month continuation of our program currently in place treating FOG “hotspots” in the collection system basins feeding lift stations 6, 7, 8, 9, and 11a. This progam will continue to savw the City critical resources in equipment and labor costs associated with both preventative and emergency response maintenance related to the buildup of FOG.

We are grateful for the opportunity to partner with the City on this important program.

Should you have any questions, or if I can be of further assistance, please do not hesitate to call.

Sincerely,

Douglas G. Fagans
Chief Commercial Officer
630-509-2488 ext.227

IN-PIPE TECHNOLOGY Because Efficiency Counts

IPTC COLLECTION SYSTEM TREATMENT

Introduction

Thank you allowing IN-PIPE Technology (IPT) the opportunity to present this proposal for our microbiological treatment to improve wastewater collections system operations. Please review this proposal in detail, if you have any questions, please do not hesitate to contact us.

The IPT Technology Solution

Summary

IPT introduces a proprietary blend of specialized facultative and aerobic bacteria near point sources of Fats, Oils, and Grease, to provide effective pre-treatment wherever issues arise. The continuous addition of microbes is achieved by installing dosing units at strategic locations in the collection system. These battery-powered, self-contained units are installed underground in manholes and/or in lift stations at strategic locations. The engineering dynamics of modifying the collection system microbiology, the partial digestion of the wastewater constituents, the control of FOG, and improved microbiological population entering the WWTP with the wastewater, all contribute to maintaining the life of existing infrastructure.

In-Pipe Application Strategy

The Microbial Dosing Units (MDUs) are battery powered, with each one containing a 30-60 day supply of IPT bacteria, a metering pump and electronics to dose continuously. The panels are inspected for functionality and reloaded periodically with microbes by the local IPT service team.

Fats, Oil, and Grease (FOG) Control

In-Pipe removes accumulations of Fats, Oils and Grease (FOG) in the collection system with a specific blend of bacteria that is highly effective at breaking down and removing FOG. Left untreated, grease buildup in the sewer pipes eventually leads to blockages and sanitary sewer overflows (SSO), leading to costly manual cleanouts and maintenance.

IPT will break down and metabolize FOG in the sewer piping and lift stations. Areas in the collection system that have historic grease problems are treated with In-Pipe's heavy grease bacteria (HGB), a blend of bacteria that specialize in producing the enzymes necessary to rapidly break down the lipolytic bonds that bind together the constituent components of FOG.

In-Pipe treatment will break down and metabolize FOG in the sewer piping and lift stations, reducing accumulations in the collection system by up to 95% thereby eliminating the need for manual cleanouts due to FOG. Once the FOG accumulations are removed, they will never return with continued In- Pipe service.

Additionally, FOG build up in lift stations contributes to the formation of odors and noxious gases and promotes the growth of filamentous bacteria that slough off and degrade the performance of the wastewater treatment plant process. As an example of our efficacy, In-Pipe has previously documented success in breaking down and eliminating FOG from the collection system at the City of Sarasota. See the photo documentation results below from a typical lift station before and after In-Pipe Treatment.

Figure 1 – Initial Conditions

Figure 2 – Conditions with IPT Treatment

Sanitary Sewer Overflow (SSO) Reduction

Using In-Pipe service may reduce SSO at locations where FOG occlusions are restricting flow during high flow events. For example, in late 2008 IPT began treating the collection system for the City of Sarasota. During that year, the City recorded nearly 69,000 gallons of spilled sewage due to SSOs. In 2009, this volume decreased to 11,300 gallons and in 2010, it was only 7,700 gallons. SSOs decreased by 90% in 3 years. We have been proud to serve the City of Sarasota ever since.

Gravity Sewer 5/22/2009

Gravity Sewer 1/22/2010 Downtown

A television survey of a gravity sewer line in the City of Sarasota showed a dramatic reduction in FOG buildup inside the gravity sewer after IPT treatment. The pictures above are screenshots from the two television surveys performed 7 months apart on an area treated with IPT bacteria. Though the process of biologically removing FOG takes time, the survey clearly shows the significant reduction in FOG accumulation as a result of the IPT bacteria. The removal of blockages like the one shown above throughout the City prevented tens of thousands of gallons of untreated raw wastewater spills.

Scope of Services

IPT Dosing Locations

IN-PIPE Technology customizes a collection system treatment solution for each customer. Strategic dosing locations are chosen at the outset of the project by our engineering staff. During installation and subsequent microbe reloads, each dosing location is evaluated and its state is documented (i.e., accumulation of FOG, excessive odor, etc.). Taking this information into consideration, the engineering team at IPT can make adjustments to the microbe blend at any location during the project in order to more effectively treat the specific situation at that location. Additionally, we provide reports highlighting potential problems that may be observed during our field service so that together, IPT and the City may be proactive in addressing potential problems before they occur.

The continuous introduction of In-Pipe microbes is achieved through numerous Microbial Dosing Units (MDUs) located below ground, inside manholes and pump stations throughout the collection system. The MDU is approximately 12-inches x 12-inches x 6-inches. They require no external power and no above-ground liquid storage. The MDUs remain the property of IPT for the duration of the project. Each MDU contains a 30-60 day supply of In-Pipe microbial solution and the panels are inspected for functionality and reloaded at 30 day intervals by the In-Pipe service team. Further, with In-Pipe service neither the MDU nor any other aspect of In-Pipe treatment requires any additional staffing or operating expense from the City of Opa-Locka.

Implementation Schedule

Upon acceptance of our proposal, IN-PIPE will implement the program as follows:

1. Receipt & Delivery of Product. We will deliver and install any required addiditional equipment: hardware, materials, and microbes on a date agreed by the City.

2. Regular service, maintenance, and review of the MDUs and locations to make sure the program progresses as expected. Each monthly supply will arrive within one week of the next service date. IPT will supply the City with a Service Reload Report for each site visit.

Packaging and Product Safety

The safety data sheet (SDS) for the IPT microbe blend is attached. IPT manufactures the microbes. The bacteria are safe to handle and are non-pathogenic. The bacteria will not harm the wastewater treatment plant, the sewer cleaning equipment or plant, animal or marine life. The product is shipped in two-liter bottles for installation into the MDUs.

Summary of Scope

- The supply, and continued operation of Microbial Dosing Units. These units remain the property of IPT
- A monthly service of MDUs, including repair and parts replacement as required, as well as the supply of Bacteria required for continuous 24/7/365 dosing.
- Monthly reports documenting the condition of the collection system treated and the impacts observed at agreed upon locations.

Pricing and Trial Period Summary

The current rate to treat the basins covered during the trial (6,7,8,9, and 11a) is $8,000 per month, or $96,000 for a period of twelve (12) months.

IN-PIPE TECHNOLOGY Because Efficiency Counts

Purchasing Quote

Proposal Number:	2024-WA142
Date:	November 20, 2024
Reference:	Opa-Locka
Availability:	6-8 Weeks ARO
FOB:	Customer Site – Freight Included
Validity:	Proposal valid for 90 Days

To:
City of Opa-Locka
780 Fisherman Street
Opa-Locka, FL 33054
Attn: Airia Austin
Email: aaustin@opalockafl.gov
Phone: 305.953.2828

From:
IN-PIPE Technology
725 N. Central
Wood Dale, IL 60191
Doug Fagans
Email: dfagans@in-pipe.com
Phone: 630.509.2488

Item	Qty.	Item Code #	Description	Price
1	12	IPT- S1	Monthly Service	$8,000/mo
			Total Cost	$96,000

Scope of Services

- 12 Months of continued bio-augmentation service to the City of Opa-Locka with monthly service intervals @$8,000 per month
- The supply and continued operation of battery-powered IPT microbial dosing units. These units remain the property of IPT

Terms

Refer to attached IPT standard Terms and Conditions.

Thank you for your consideration. We look forward to reviewing the proposal with you.

OFFERED BY:

IN-PIPE TECHNOLOGY, LLC

Douglas G. Fagans
Chief Commercial Officer

ACCEPTED BY:
City of Opa-Locka

Signature: _____

Name & Title: _____

Date: _____

Purchase Order No: _____

Key Personnel

BRYAN WEBER
Chief Executive Officer

Bryan Weber is a growth-oriented, diverse, global business executive with particular strengths in division general management (P&L), marketing and strategic planning. He has broad experience encompassing consumer products, management consulting, business services and engineered industrial products. He has led teams of 350 people, and managed businesses exceeding $100 million in size, including the water business at Underwriters Laboratories. He received his B.S. in chemical engineering from Purdue University and an M.B.A., with distinction in marketing and finance from Northwestern University's Kellogg Graduate School of Management.

DOUG FAGANS
Chief Commercial Officer

Doug Fagans is a global business strategy and sales executive with deep experience driving sustainable growth through operational excellence. His varied background includes senior leadership roles in Client Solutions/Implementation, Sales, Marketing, Strategy, Channel Management, Product Management, and Consulting. Doug received his BA in International Affairs from the George Washington University, and his MBA in Marketing, Strategy, and International Business from Northwestern University's Kellogg Graduate School of Management.

MARIE KROGER, PhD
Chief Science Officer

Dr. Marie Kroeger is an experienced scientist leading interdisciplinary research teams focused on understanding how the microbiome affects ecosystem functions and leveraging that knowledge to engineer ecosystems for functions like decreased greenhouse gas emissions. Marie's diverse research background integrated microbial physiology, multi-omics', and both synthetic and natural microbial communities to address fundamental and applied research objectives. Marie earned her BS in Biology from Northeastern Illinois University and PhD in Microbiology from the University of Massachusetts Amherst. Prior to joining In-Pipe, Marie earned a Chick-Keller Postdoctoral Fellowship at Los Alamos National Laboratory before becoming a staff scientist in the Bioscience Division.

XIAOLONG WANG, PhD
Head of Engineering

Dr. Xiaolong Wang has been studying and working in wastewater treatment and collection system modeling for 8 years, with projects aiming to improve plant treatment efficiency, reduce plant operation costs, and change wastewater characteristics in sewer system. Xiaolong received his BS in Environmental Engineering from Jilin Jianzhu University, and earned a PhD in Environmental Engineering from the Illinois Institute of Technology. He is a Licensed Professional Engineer (P.E) in the State of Wisconsin. He is active in WEF and IWEA member, joining both organizations in 2015. He received an Academic Excellence Award from the Central States Water Environmental Association in 2018. He currently serves on the IWEA the Plant Operations Committee and the Award Committee.

IN-PIPE Technology References

City of Sarasota, FL
1750 12th Street
Sarasota, FL 34236
Customers Serviced: 55,500 (6 MGD)
Dates of Service: August, 2006 to Present
Mr. Carlos Marin
Phone: (941)955- 2200 X 6278
Email: carlos.marin@sarasotagov.com

City of Lakeland
1825 Glendale Street
Lakeland, FL 33803
Customers Serviced: 97,400 (35 MGD)
Dates of Service: February, 2001 to Present
Mr. Rick Ruede, Collections Manager
Phone: (863)34-6571
Email: richard.ruede@lakelandgov.net

City of Oklahoma City
200 N. Walker
Oklahoma City, OK 73102
Customers Services: 150,000 (50 MGD)
Dates of Service: June 2014 to Present
Mr. Kenny Davis, Collections Manager
Phone: (405)990-2661
Email: kenny.davis@okc.gov

City of Crown Point
1321 Merrillville Rd.
Crown Point, IN 46307
Customers Serviced: 21,000 (5.2 MGD)
Dates Service: August, 2007 to Present
Mr. Chris Previs, Wastewater Treatment Plant Manager
Phone: (219)662-3255
Email: cprevis@crownpoint.in.gov

City of Texas City
3901 Bay Street
Texas City, TX 77590
Customers Services: 45,000 (13 MGD)
Dates of Service: November 2012 to Present
Mr. Calvin Bremer, Wastewater Treatment Superintendent
Phone: (409)643-5961
Email: cbremer@texas-city-tx.org

City of McHenry
333 S. Green St.
McHenry, IL 60050
Customers Serviced: 23,450 (4.8 MGD)
Dates of Service: October 2013 to Present
Mr. Russel Ruzicka, Wastewater Treatment Superintendent
Phone: (815)578-1303
Email: rruzicka@ci.mchenry.il.us

2024 FOREIGN LIMITED LIABILITY COMPANY ANNUAL REPORT

FILED
Feb 16, 2024
Secretary of State
4761069716CC

DOCUMENT# M17000005985

Entity Name: WASTEWATER ACQUISITION, LLC

Current Principal Place of Business:

725 N CENTRAL AVE
WOOD DALE, IL 60619

Current Mailing Address:

725 N CENTRAL AVE
WOOD DALE, IL 60619 US

FEI Number: 82-1135178

Certificate of Status Desired: No

Name and Address of Current Registered Agent:

CORPORATION SERVICE COMPANY
1201 HAYS STREET
TALLAHASSEE, FL 32301-2525 US

The above named entity submits this statement for the purpose of changing its registered office or registered agent, or both, in the State of Florida.

SIGNATURE: TESSA SCHWARZ 02/16/2024

Electronic Signature of Registered Agent — Date

Authorized Person(s) Detail :

Title	MEMBER, PRESIDENT, CEO	Title	MEMBER
Name	WEBER, BRYAN M.	Name	FAGANS, DOUG
Address	725 N CENTRAL AVE	Address	725 N CENTRAL AVE
City-State-Zip:	WOOD DALE IL 60619	City-State-Zip:	WOOD DALE IL 60619

I hereby certify that the information indicated on this report or supplemental report is true and accurate and that my electronic signature shall have the same legal effect as if made under oath; that I am a managing member or manager of the limited liability company or the receiver or trustee empowered to execute this report as required by Chapter 605, Florida Statutes; and that my name appears above, or on an attachment with all other like empowered.

SIGNATURE: BRYAN M. WEBER MEMBER 02/16/2024

Electronic Signature of Signing Authorized Person(s) Detail — Date

Sponsored by: Interim City Manager

RESOLUTION NO. _____

A RESOLUTION OF THE CITY COMMISSION OF THE CITY OF OPA-LOCKA, FLORIDA, AUTHORIZING THE INTERIM CITY MANAGER TO ENTER INTO A SOLE SOURCE CONTRACT WITH WASTEWATER ACQUISITION LLC D/B/A IN-PIPE TECHNOLOGY, INC, IN AN AMOUNT NOT TO EXCEED TWENTY-FIVE THOUSAND DOLLARS ($25,000.00), FOR THE DIRECT PURCHASE OF AN AOP-16 LIFT STATION ODOR CONTROL UNIT FOR PUMP STATION NO. 2 WITHIN THE CITY; PROVIDING FOR INCORPORATION OF RECITALS; PROVIDING FOR AN EFFECTIVE DATE.

WHEREAS, pursuant to Resolution No. 24-015, the City purchased an odor control unit for Pump Station 11-A, located at the southeast corner of Sherbondy Village Park. Since the installation of the unit, the air quality for this area has significantly improved; and

WHEREAS, City Administration recommends purchasing an identical odor control unit for Pump Station No. 2 located at Helen Miller Community Center/Segal Park because during periods of high flows, the source of noxious odors adversely affects the park's patrons; and

WHEREAS, to resolve this concern, the Interim City Manager recommends the purchase and installation of a Lift Station Odor Control Unit for Pump Station 2 within the City at a cost of Twenty-Five Thousand Dollars ($25,000.00); and

WHEREAS, Wastewater Acquisition LLC d/b/a In-Pipe Technology, Inc is the sole source provider that completely treats noxious gases (including hydrogen sulfide). Other comparable systems in the industry require monthly to quarterly replacement of costly treatment media while the recommended unit only requires maintenance every 14 months (10,000 Hours); and

WHEREAS, maintenance for the system will be required in 14 months, incurring an ongoing cost estimated at Four Thousand Dollars ($4,000.00) per maintenance cycle. Despite the added expense, maintaining this system is critical and the associated costs will be incorporated into future annual budgets; and

WHEREAS, the Interim City Manager recommends the purchase of an AOP-16 Lift Station Odor Control Unit from Wastewater Acquisition LLC d/b/a In-Pipe Technology, Inc for Twenty-Five Thousand Dollars ($25,000.00); and

WHEREAS, pursuant to Section 2-318(1)(b) and 2-318(1)(c) of the City's Purchasing Ordinance 20-07, "b. A contract may be awarded without competition when the city manager makes a written determination, after conducting a good faith review of available sources, that there is only one (1) source for the required supplies or contractual service. The city manager shall conduct negotiations as appropriate to price, delivery and terms. A record of sole source procurement shall be maintained as a public record and shall list each contractors name, amount and type of each contract, and the identification number of each contract file; c. All sole source procurements, where the cost of the supplies or contractual services exceeds Twenty- Five Thousand Dollars ($25,000.00), shall be authorized by the city commission"; and

WHEREAS, the Interim City Manager desires to have this item approved by the City Commission; and

WHEREAS, the City Commission finds that it is in the best interests of the City and its residents to purchase an AOP-16 Lift Station Odor Control Unit for Pump Station No. 2 within the City from sole source supplier, Wastewater Acquisition LLC d/b/a In-Pipe Technology, Inc, pursuant to the terms attached hereto as Exhibit "A".

NOW THEREFORE, BE IT RESOLVED BY THE CITY COMMISSION OF THE CITY OF OPA LOCKA, FLORIDA:

Section 1. RECITALS ADOPTED.
The recitals to the preamble herein are incorporated by reference.

Section 2. AUTHORIZATION
The City Commission of the City of Opa-Locka, hereby authorizes the Interim City Manager to enter into a sole source contract with Wastewater Acquisition LLC d/b/a In-Pipe Technology, Inc, in an amount not to exceed Twenty-Five Thousand Dollars ($25,000.00), for the direct purchase of an AOP-16 Lift Station Odor Control Unit for Pump Station No. 2, within the City, pursuant to the terms attached hereto as Exhibit "A".

SECTION 3. SCRIVENER'S ERRORS.
Sections of this Resolution may be renumbered or re-lettered and corrections of typographical errors which do not affect the intent may be authorized by the Interim City Manager following review by the City Attorney and without need of public hearing, by filing a corrected copy of same with the City Clerk.

Section 4. EFFECTIVE DATE.
This Resolution shall be effective immediately upon adoption hereof and approval by the Governor of the State of Florida or Governor's designee

PASSED and **ADOPTED** this _____ day of _____, 2024.

_____
John Taylor, Mayor

ATTEST:

_____
Joanna Flores, City Clerk

APPROVED AS TO FORM
AND LEGAL SUFFICIENCY:

_____
Burnadette Norris-Weeks, P.A.
City Attorney

Moved by: _____

Seconded by: _____

VOTE:

Commissioner Bass	_____
Commissioner Santiago	_____
Commissioner Ervin	_____
Vice Mayor Kelley	_____
Mayor Taylor	_____

City of Opa-locka
Agenda Cover Memo

Department Director:	Airia Austin			**Department Director Signature:**		
Interim City Manager:	Sha'mecca Lawson			**ICM Signature**		
Commission Meeting Date:	12.11.2024		**Item Type:** *(Enter X in box)*	**Resolution**	**Ordinance**	**Other**
				X		
Fiscal Impact: *(Enter X in box)*	**Yes**	**No**	**Resolution Reading:** *(Enter X in box)*		**1st Reading**	**2nd Reading**
					X	
	X		**Public Hearing:** *(Enter X in box)*		**Yes** / **No**	**Yes** / **No**
					X	X
Funding Source: *Account#:*	*(Enter Fund & Dept)* Ex: N/A See Financial Impact section below		**Advertising Requirement:** *(Enter X in box)*		**Yes**	**No**
					X	
ILA Required: *(Enter X in box)*	**Yes**	**No**	**RFP/RFQ/Bid#:**			
	X					
Strategic Plan Related *(Enter X in box)*	**Yes**	**No**	**Strategic Plan Priority Area:** **Enhance Organizational** ☐ **Bus. & Economic Dev** ■ **Public Safety** ☐ **Quality of Education** ☐ **Qual. of Life & City Image** ☐ **Communication** ☐		**Strategic Plan Obj./Strategy:** *(list the specific objective/strategy this item will address)*	
	X					
Sponsor Name	Interim City Manager		**Department:** Planning & Community Development		City Manager	

Short Title:

A RESOLUTION OF THE CITY COMMISSION OF THE CITY OF OPA-LOCKA AUTHORIZING THE INTERIM CITY MANAGER TO ENTER INTO AN AGREEMENT WITH IN-PIPE TECHNOLOGY TO PURCHASE AN ODOR CONTROL UNIT FOR PUMP STATION NO.2 LOCATED AT HELEN MILLER COMMUNITY CENTER/SEGAL PARK.

Staff Summary:

Pursuant to Resolution No. 24-015, the City purchased an odor control unit for pump station 11-A, located at the southeast corner of Sherbondy Village Park. Since the installation of the unit, the air quality for this area have significantly improved.

City Administration recommends purchasing an identical odor control unit for Pump Station No. 2 located at Helen Miller Community Center/ Segal Park. During the periods of high flows, the source

of noxious odors adversely affect the park's patrons. In-Pipe Technology is the sole source provider that completely treats noxious gases (including hydrogen sulfide). Other comparable systems in the industry require monthly to quarterly replacement of costly treatment media while the recommended unit only requires maintenance every 14 months (10,000 Hours). The cost for this unit is $25,000.

Financial Impact: The Odor Control Unit was included in the FY 25 adopted budget in the following account:

Account	Description	Available	Expenditure	Remaining Balance
35-535640	Machinery & Equipment	$78,018.24	$25,000.00	$53,018.24

Maintenance for the system will be required in 14 months, incurring an ongoing cost estimated at $4,000 per maintenance cycle. Despite the added expense, maintaining this system is critical and the associated costs will be incorporated into future annual budgets. These maintenance expenses will be allocated to the Water-Sewer Fund, which will have a minimal impact on the Fund Balance.

Proposed Action:

Staff recommends the City Commission approve the purchase of a, AOP-16 Pump Station Odor Control unit of $25,000.00

Attachment:

Agenda Cover
Sale Quotation

CITY OF OPA-LOCKA AGREEMENT FOR THE PURCHASE OF AN AOP-16 LIFT STATION ODOR CONTROL UNIT

This Agreement is made this ____ day of _____, 2024, between the City of Opa-Locka, a municipal corporation organized and existing under the laws of the State of Florida and whose address is 780 Fisherman Street, Opa-Locka, Florida 33054 (the **"City"),** and Wastewater Acquisition LLC d/b/a In-Pipe Technology, Inc. ("Contractor") whose address is 725 N. Central Avenue, Wood Dale, IL 60191 (the **"Contractor").**

WITNESSETH

WHEREAS, Wastewater Acquisition LLC d/b/a In-Pipe Technology, Inc., located in Wood Dale, Illinois is a sole source that completely treats noxious gases (including hydrogen sulfide); and

WHEREAS, the Contractor desires to enter into this Agreement ("Agreement") with City for the purchase of an AOP-16 Lift Station Odor Control Unit. (the "Project"); and

NOW THEREFORE, in consideration of the mutual covenants set forth in this Agreement, the receipt and sufficiency of which is acknowledged, the parties agree as follows:

Section 1. Term. The term of this Agreement commences upon fully execution of this agreement and continues for one year, unless terminated earlier by its terms.

Section 2. Contract Terms. The Contractor agrees to provide the City with an AOP-16 Lift Station Odor Control Unit, in accordance with the City's requirements as set forth herein and the Contractor's Sales Quote, attached hereto and incorporated herein as Exhibit "A". The exhibits are incorporated into this Agreement for all purposes, and are collectively referred to as the "Contract Documents", and represent

the entire agreement between the parties. In the event of conflict between or among the Contract Documents, the order of priority shall be: this Agreement and the Contractor's accepted proposal.

Section 3. Scope of Work

The following provisions are included:

A. City shall pay Contractor no more than the prices set forth in the Contract Documents and in accordance with the provisions of the Contract Documents. If the City requires services not covered by unit prices already made a part of the Contract Documents, the Contractor shall submit a detailed written proposal to the authorized City representative before providing any such services. For these purposes, Airia Austin, as Public Works Director, shall be the City Representative and may be reached at 305-953-2868 Ext 1450.

B. If permits are required, Contractor shall submit complete and accurate permit applications to all applicable permitting agencies within ten workdays of receiving from the City all documents necessary to file such permit applications. The City shall pay all permit and related fees directly to the permitting agencies, including any permit fees charged by the City.

C. Contractor shall not commence work on the Project unless and until the requirements for insurance have been fully met by Contractor and appropriate evidence thereof, in the City's sole discretion, has been provided to and approved by the City.

Section 4. Insurance.

A. The CONTRACTOR shall not commence work under this contract until it has obtained all insurance required under this paragraph and such insurance has been approved by the CITY nor shall the CONTRACTOR allow any Subcontractor to commence work on his sub-contract until all similar such insurance required of the subcontractor has been obtained and approved.

B. Certificates of insurance, reflecting evidence of the required insurance, shall be filed with the CITY prior to the commencement of the work. These Certificates shall contain a provision that coverage afforded under these policies will not be canceled or modified until at least thirty days (30) prior written notice has been given to the CITY.

Policies shall be issued by companies authorized to do business under the laws of the State of Florida.

C. Financial Ratings must be no less than "A" in the latest edition of "Bests Key Rating Guide", published by A.M. Best Guide.

D. Insurance shall be in force until all work required to be performed under the terms of the Contract is satisfactorily completed as evidenced by the formal acceptance by the CITY. In the event the insurance certificate provided indicates that the insurance shall terminate and lapse during the period of this contract, then in that event, the CONTRACTOR shall furnish, at least thirty days (30) prior to the expiration of the date or modification of such insurance, a renewed certificate of insurance as proof that equal and like coverage for the balance of the period of the contract and extension thereunder is in effect. The CONTRACTOR shall not continue to work pursuant to this contract unless all required insurance remains in full force and effect.

E. Commercial General Liability Insurance Covering premises-operations, product-completed operations, independent contractors, and contractual liability. Limits: Combined single limit bodily injury/property damage $1,000,000 per occurrence ($2,000,000 Aggregate).

F. Automobile Liability Insurance covering all owned, hired and non-owned automobile equipment, and other vehicles used by the successful bidder in the performance of the work with limits not less than $1,000,000 per Occurrence/$1,000,000 Aggregate (Including Policy Number and Policy Period.

G. Workers' Compensation coverage with statutory limits and Employer's Liability coverage with limits not less than $100,000 (Including Policy Number and Policy Period);

H. A certificate naming the City as an "additional insured" for General Liability is required.

I. Certificate holder should be addressed as follows: City of Opa-Locka 780 Fisherman Street, 4th Floor Opa-Locka, FL 33054

J. The CONTRACTOR shall hold the CITY, the City of Opa-Locka their agents, and employees, harmless on account of claims for damages to persons, property

or premises arising out of the operations to complete this Agreement and name the CITY as an additional insured under their policy.

K. The CITY reserves the right to require any other insurance coverage it deems necessary depending upon the exposures.

Section 5. Assignment. Neither party may assign its rights or obligations under this Agreement without the consent of the other.

Section 6. Notice. Notice hereunder shall be provided in writing by certified mail, return receipt requested, or customarily used overnight transmission with proof of delivery, to the following parties, with mandatory copies, as provided below:

For City:	Sha'mecca Lawson, Interim City Manager City of Opa-Locka 780 Fisherman Street Opa-Locka, Florida, Florida 33054
Copy To:	Burnadette Norris-Weeks, Esq. City Attorney Burnadette Norris-Weeks, P.A. 401 NW 7th Avenue Fort Lauderdale, Florida 33311
For Contractor:	Francis John Williams Wastewater Acquisition LLC d/b/a In-Pipe Technology, Inc. 725 N. Central Avenue, Wood Dale, IL 60191
Copy To:	Daniel Williamson Wastewater Acquisition LLC d/b/a In-Pipe Technology, Inc.725 N. Central Avenue, Wood Dale, IL 60191

Section 7. Severability. This Agreement sets forth the entire agreement between Contractor and City with respect to the subject matter of this Agreement. This Agreement supersedes all prior and contemporaneous negotiations, understandings and agreements, written or oral, between the parties. This Agreement may not be modified except by the parties' mutual agreement set forth in writing and signed by the parties.

IF CONSULTANT HAS QUESTIONS REGARDING THE APPLICATION OF CHAPTER 119, FLORIDA STATUTES, TO CONSULTANT'S DUTY TO PROVIDE PUBLIC RECORDS RELATING TO THIS AGREEMENT, CONTACT THE CUSTODIAN OF PUBLIC RECORDS AT (305) 953-2800, email: jflores@Opalockafl.gov OR BY MAIL: City of Opa-locka – City Clerk's Office, 780 Fisherman Street, Opa-Locka, FL 33054

Section 8. E-verify. In accordance with Florida Statutes §448.095, the Contractor, prior to commencement of services or payment by the City, will provide to the City proof of participation/ enrollment in the EVerify system of the Department of Homeland Security. Evidence of participation/enrollment will be a printout of the Company's "Company Profile" page from the Everify system. Failure to be continually enrolled and participating in the E-Verify program will be a breach of contract which will be grounds for immediate termination of the contract by the City. The Consultant will not hire any employee who has not been vetted through E-Verify. The Contractor may not subcontract any work for the City to any subcontractor that has not provided an affidavit stating that the subcontractor does not employ, contract with or subcontract with an unauthorized alien.

IN WITNESS WHEREOF, the parties hereto have accepted, made and executed this Agreement upon the terms and conditions above stated on the day and year first above written.

[REMAINDER OF PAGE LEFT INTENTIONALLY BLANK]

CITY: City of Opa-Locka

By:_____
Sha'mecca Lawson, Interim City Manager

Date:_____

By:_____
Joanna Flores, City Clerk

APPROVED AS TO FORM AND LEGAL SUFFICIENCYFOR THE USE OF AND RELIANCE BY THE CITY OF OPA-LOCKA ONLY:

By:_____
City Attorney
Burnadette Norris-Weeks, P.A.

CONTRACTOR:
WASTEWATER ACQUISITION LLC D/B/A IN-PIPE TECHNOLOGY, INC.

By: _____ Witness:_____

_____ _____
PRINT NAME

Date:_____

_____
TITLE

Date:_____

PROPOSAL TO:

City of Opa-locka

Advanced Oxidation Process Lift Station Odor Control Unit (AOP-16) – LS 2

Date: November 20, 2024

Proposal Number 2024-WA143

IN-PIPE TECHNOLOGY Because Efficiency Counts

Lift Station Odor Control

In-Pipe Technology (IPT) is pleased to present this proposal for the capital purchase of our AOP-16 Lift Station Odor Control unit. The unit uses photohydroionization (PHI) to produce safe, environmentally friendly hydroxide ions that are very efficient at oxidizing hydrogen sulfide (H_2S) to reduce odor problems from lift station wet wells. Via the venturi effect created by an airflow eductor, negative pressure is created in the headspace of the wet well to slowly draw hazardous gases from the wet well and oxidize them inside of the unit itself.

Please see the attached equipment cut sheet and specification for details on the unit's benefits and operation. In general, an average of 80-95% reduction in H_2S gases can be achieved. For stricter control of H_2S emissions requiring either 100% removal or less than 5 parts per million (ppm), small amounts of activated carbon (less than 1-2 lbs total) can be added to the exhaust of the AOP-16.

This proposal will outline the costs of our unit if purchased.

The AOP-16 is meant for continuous operation. Maintenance of the AOP-16 should be performed every 10,000 hours or every 14 months. In general, maintenance involves replacing the (6) PHI (UV) light cells, and ensuring other components are operating as intended (and replaced as needed). If the unit is left installed and not operational, there is a significant risk of damage and corrosion to the internal PHI mechanisms from exposure to H_2S. Please see below for a schedule of maintenance options available.

Summary of Scope

- The supply of one (1) AOP-16 Lift Station Odor Control Unit at lift station 2, including all required piping.

- Installation of the unit to the lift station exhaust valve. The exhaust valve must be detached of any other equipment prior to installation.
- Electrical hookup to 110v MUST be performed by the City or a county-approved licensed contractor.
- Sufficient space on a concrete pad must be provided by the City

Available Maintenance Services

Maintenance can be performed by City personnel (maintenance manual to be provided upon installation). Alternately IPT can perform the following services (prices are per unit):

- **Full Service - $500/month**. This includes a full replacement of all parts (as identified on our parts list) every 10,000 hours, monthly inspection on the unit and the monthly replacement of any optional additional carbon as required.
- **Full Service Plus $1,500/month**. We will continuously monitor via H2S Acrulog (which remains our property) and fully replace the parts (as identified on our parts list) every 10,000 hours. Includes a monthly inspection on the unit, monthly replacement of carbon filters (if selected), and monthly reporting of H2S levels at the exhaust of the unit.
- **Monthly Inspection and Carbon Filter Replacement - $300/month**. We will inspect the unit monthly and notify the customer if/when the unit requires maintenance – we also will replace the carbon (if using) monthly.
- **One Time Service (recommended every 10,000 hours/14 months of operation) - $4,000**. We will replace all 6 PHI cells and any other parts as necessary (provided the unit has not corroded due to H2S gasses allowed in due to the unit being inoperative) and ensure the unit is ready for an additional 10,000 hours of operation.
- **Replacement Activated Carbon and filter bags- $500/50lb box**.
- **Complete replacement of internal PHI unit - $7,500** (e.g. if unit is left installed inoperative and is corroded due to exposure to H2S gasses for a prolonged period of time)

IN-PIPE TECHNOLOGY Because Efficiency Counts

Purchasing Quote

Proposal Number:	2024-WA143
Date:	November 20, 2024
Reference:	Opa-locka LS 2
Availability:	8-10 weeks ARO
Delivery:	Included
Validity:	Proposal valid for 30 Days

To:
City of Opa-Locka
12950 Lejeune Road (NW 42nd Avenue)
Opa-locka, FL 33054

Phone: (305) 953-2868
E-mail: aaustin@opalockafl.gov
Attn: Airia Austin
Public Works Director

From:
In-Pipe Technology® Company, Inc.
725 N. Central Ave.
Wood Dale, IL 60191

Phone: (630) 509-2488
E-mail: dfagans@in-pipe.com
Attn: Douglas Fagans
Chief Commercial Officer

Item	Qty	Item Code #	Description	Price
1	1	IPT-AOP-16	Purchase of IPT(OH^-) Hydroxyl Odor Control Equipment for Lift Stations	$20,000
2	1	IPT-AOP-INST	Delivery and Installation	$5,000
		Total Cost		$25,000

IN-PIPE TECHNOLOGY Because Efficiency Counts

Purchasing Quote		
	Proposal Number:	2024-WA143
	Date:	November 20, 2024
	Reference:	Opa-locka LS 2
	Availability:	8-10 Weeks ARO
	Delivery:	Included
	Validity:	Proposal valid for 30 Days

Terms

Refer to attached IPT standard Terms and Conditions.

Thank you for your consideration. We look forward to reviewing the proposal with you.

OFFERED BY:

IN-PIPE TECHNOLOGY, LLC

Douglas G. Fagans
Chief Commercial Officer

ACCEPTED BY:
City of Opa-locka

Signature: _____

Name & Title: _____

Date: _____

Purchase Order No: _____

IN-PIPE TECHNOLOGY Because Efficiency Counts

IN-PIPE TECHNOLOGY COMPANY, INC.
EXHIBIT A
STANDARD TERMS AND CONDITIONS

1.0 ACCEPTANCE Sale of any products or services (hereafter, the "Products") by In-Pipe Technology Company, Inc. ("Seller") to Purchaser shall be subject to the terms and conditions of sale contained herein. No change in or addition to these terms shall be binding upon Seller unless specifically accepted in writing by Seller. Seller objects in advance to any additional or different terms proposed in Purchaser's order.

2.0 PRICING Prices shall be Seller's price in effect at time of shipment unless otherwise specified in Seller's written quotation. Quotations automatically expire 90 calendar days from quotation date and may be canceled at any time by written notice.

3.0 FORCE MAJEURE LIMITATION Seller shall not be liable for any loss, damage or expense resulting from delay or failure in the performance of Seller's obligations hereunder if such delay or failure is due to acts of God or the public enemy, strikes, labor troubles, fire, explosions, riots, war, governmental orders or restrictions, shortages of materials or labor, delay in transportation, theft, accidents or any other cause which is beyond Seller's reasonable control. Upon the occurrence of any such event preventing the Seller from performing all of its then outstanding contracts, the Seller shall then be entitled to perform such of its contracts as it may select and shall incur no liability to the Purchaser by reason of performing contracts other than this agreement. The Seller's total liability for damages related to the performance of or failure to perform this agreement shall be limited to the amount of the contract price. IN NO EVENT SHALL THE SELLER BE LIABLE FOR LOSS OF PROFITS BY REASON OF PLANT SHUTDOWN, NON-OPERATION OR INCREASE IN EXPENSE OF OPERATION OF OTHER EQUIPMENT OR FACILITIES OR FOR ANY SPECIAL, INDIRECT OR CONSEQUENTIAL DAMAGES.

4.0 DELIVERY Shipping dates are estimates only and are based on Seller's projected production schedules and commitments by suppliers. DELAY IN SHIPMENT OR VARIANCE FROM SHIPPING SCHEDULE SHALL NOT BE CAUSE FOR CANCELLATION OR CLAIM FOR DAMAGE. Receipt by the Purchaser of any Products or services shall constitute acceptance of delivery and waiver of any claims due to delay.

5.0 WARRANTY Supplier warrants that its labor, materials, and equipment supplied hereunder shall be free from defect and shall conform to the standards of care in effect in its industry at the time of performance of such labor, materials, and equipment for the time this contract is in effect.

5.1 Supplier's obligation is limited to repair or replacement F.O.B. Purchaser's facility when examination of any such equipment shall disclose them to Supplier's reasonable satisfaction to have been defective and Purchaser shall have promptly notified Supplier of the discovery of any such defect. Supplier will not be responsible for; work done, material or equipment furnished or repairs or alterations made by others.

5.2 For any breach hereunder, Supplier shall be liable to Purchaser for all damages (limited as stated in "Liability of Supplier") as shall be applicable under the law, except as otherwise provided in this agreement. Purchaser shall be entitled to pursue all rights and remedies available by law, except as otherwise provided in this agreement. In any event, Supplier's total liability towards Purchaser for alleged faulty performance or nonperformance under this contract shall be limited to the total contract price. THE ABOVE WARRANTY IS INLIEU OF ALL OTHER WARRANTIES, EXPRESS OR IMPLIED, INCLUDING, BUT NOT LIMITED TO, WARRANTIES OR MERCHANTABILITY OR FITNESS FOR A PARTICULAR PURPOSE, WHICH ARE HEREBY DISCLAIMED.

6.0 LIABILITY OF SUPPLIER shall not be liable for any bodily injury, death, or injury to or destruction of tangible property except, as the same may have been caused by the negligence or willful misconduct of Supplier. In no event shall Supplier be liable for any delays or special, indirect, incidental or consequential damages. Purchaser agrees that the total limit of Supplier's liability (whether based on negligence, warranty, strict liability or otherwise) hereunder, shall not exceed the aggregate amount due Supplier for services rendered under this contract. All claims, including claims for negligence or any other cause whatsoever, shall be deemed waived unless made in writing and received by Supplier within one (1) year after Supplier's completion of work hereunder.

7.0 PAYMENTS Terms of payment are net 30 days. The maximum legal rate (or 18%) of interest and all costs of collection (including attorney's fees) shall be charged on past due accounts. All orders are subject to the continuing approval of Seller's credit department. If Purchaser is in default in any payment, Seller may declare all payments for work completed

immediately due and payable, stop all further work until payments are brought current and/or require advance payment for future shipments. If the financial condition of the Purchaser at any time does not in the judgment of Seller justify continuance of production or shipment on the terms of payment set forth herein, Seller may require full or partial payment in advance or shall be entitled to cancel any order then outstanding and shall receive reimbursement for its reasonable and proper cancellation charges. In the event of bankruptcy or insolvency of the Purchaser or in the event any proceeding is brought against the Purchaser, voluntarily or involuntarily under the bankruptcy or any insolvency laws, Seller shall be entitled to cancel any order then outstanding at any time during the period allowed for filing claims against the estate and shall receive reimbursement for its reasonable and proper cancellation charges.

8.0 DRAWINGS If drawings are furnished with this proposal, they are submitted only to show the general style, arrangement and approximate dimensions of the equipment and services offered. No work is to be based upon proposal drawings. It is the Purchaser's responsibility to verify that the data given on certified drawings is suitable for applicable installation conditions. Any changes made after the order is released for manufacture will be subject to extra charges.

9.0 TITLE/RISK OF LOSS/DEFAULT Unless otherwise specified by Seller, delivery will be made F.O.B. point of shipment to Purchaser. Title to right of possession and ownership of equipment covered herein shall remain the property of the Seller. The Purchaser agrees to do all acts necessary to perfect and maintain such right and title in the Seller. In case of failure or refusal to make payments when due, then and in any such event the whole of the unpaid portion of the purchase price shall, at Seller's option, become immediately due and payable and in case of such default on Purchaser's part, Seller shall thereupon have the right to enter the premises upon which such property shall be installed and take possession of and remove the same without legal process. This equipment shall retain its character as personal property regardless of its mode of attachment. Risk of loss or damage shall pass to Purchaser on delivery to carrier.

10.0 TAXES In addition to any price specified herein, Purchaser shall pay the gross amount of any present, or future sales, use, excess, value added or other similar tax applicable to the price, sale or delivery of any Products or their use by Seller or Purchaser, or Purchaser shall furnish Seller with a tax exempt certificate acceptable to the taxing authorities.

11.0 CANCELLATION Any order placed with Seller may be cancelled by the Purchaser only upon payment of reasonable cancellation charges, which shall take into account expenses already incurred and commitments made by the Seller.

12.0 PROPRIETARY IPT BULK MICROBE CULTURE The Client agrees that it will use prudent attempts to ensure that no analysis will be allowed on the IPT bulk microbe culture reagents without prior written authorization by In-Pipe Technology Company, LLC. In-Pipe Technology methodology is protected by US Patents (#5,578,211 and 5,788,841 and Canada Patent # 2,272,689) owned by the company.

13.0 DISPUTE RESOLUTION Any dispute or controversy arising out of, under, or in connection with, or in relation to, this Agreement and/or any amendments thereto, or the breach thereof, which is not resolved informally by prior mutual agreement of the Purchaser and Seller, shall be submitted to non-binding arbitration, unless otherwise waived and/or modified in writing by the Parties. The cost of such arbitration shall be paid by the Purchaser and Seller equally; however, the prevailing party in the arbitration shall be entitled to reimbursement of its attorney's fees and other costs and expenses incurred in connection therewith.

13.1 If a dispute arises which is not resolved by arbitration pursuant to the above, and either party reasonably retains counsel for the purpose of enforcing any provision of this Agreement, including without limitation the institution of any action or proceeding to enforce any provision of this Agreement, or to recover damages if otherwise available hereunder, or to obtain injunctive or other relief by reason of any alleged breach of any provision of this Agreement, or for a declaration based on a demonstrated necessity of such Party's rights or obligations under this Agreement, or for any other judicial or equitable remedy, then if the matter is settled by judicial or quasi-judicial determination, the prevailing Party shall be entitled, in addition to such other relief as may be granted, to be reimbursed by the losing Party for all costs and expenses incurred including, without limitation, all attorneys' fees and costs for services rendered to the prevailing Party and any attorneys' fees and costs incurred in enforcing any judgment or order entered. The prevailing Party shall be as determined by the court in the initial or any subsequent proceeding.

14.0 GENERAL The terms and conditions hereof cancel and supersede all previous understandings or agreements relating to the Products covered hereunder, written or oral, between Seller and Purchaser and contain the entire understanding of the parties hereto. Terms and conditions in the attached proposal supersede terms and conditions in this document No waiver, alteration, deletion or modification of or addition to any of the provisions hereof shall be binding unless in writing and signed by a duly authorized representative of the Seller. If any term, provision or condition contained herein shall, to any

expert, be invalid or unenforceable, the remainder of the terms, provisions and conditions hereof other than those which are invalid or unenforceable, shall not be affected thereby and each term, provision and condition of this order shall be valid and enforceable to the fullest extent permitted by law. This order and all rights and obligations of the parties shall be construed and interpreted under and pursuant to the laws of the State of Illinois.

IN-PIPE TECHNOLOGY Because Efficiency Counts

In-Pipe Technology Odor Control Unit (IPT-AOP-16) Advanced Oxidation Process System for Wastewater

THE LOW COST IPT-AOP-16 ODOR CONTROL SYSTEM OF ADVANCED OXIDATION GAS PRODUCTION IS DESIGNED TO PROVIDE ODOR DESTRUCTION

IPT-AOP-16 Odor Control Unit produces advanced oxidation gases

High intensity UV light produces Advanced Oxidation gases (Ozone, Hydroperoxides, Super Oxide Ions, Hydroxides and Ozonide Ions)

Destroys odor molecules, bacteria, and organic pollutants

Highlights

10,000 hours average cell life	All stainless steel
Plug and play, fully automatic, system	Easy to use and install, versatile and portable
No costly and complicated chemicals	Leaves no residue
Automatic Unattended Operation	Environmentally friendly
Low Maintenance	Low power consumption, 110V or 220V
Safety Service Cut Off Switch	On off indicator light
High-Capacity Blower	Eliminates odors

IN-PIPE TECHNOLOGY Because Efficiency Counts

Specification Table

Model	IPT-AOP-16
Design Criteria	One IPT-AOP-16 unit for approximate 4,000 ft^3 of foul air
Voltage	110V, 60Hz, Low:1.36 A, High: 2.17A 220V, 50/60 Hz, Low: 0.68A, High: 1.09A
Weight	Approximate 250 lbs
Material	Stainless steel
Color	Green
Dimensions	30" x 48" x 24"
Enclosure/shade for outdoor installations	Recommend a simple structure like a lean-to for shade
Inlet/Outlet	3" PVC Flange
Controls	On/off, High/low (Six cells on high setting - three cells on low setting)
Fan volume	100 CFM
Number of Phi cells	Six (6)
Phi cell	Life approx. 10000 hours
Oxidation gases	Hydro peroxides, Ozone, Super oxide ions, Ozonide ions

Internal Piping Schematic and Clearances

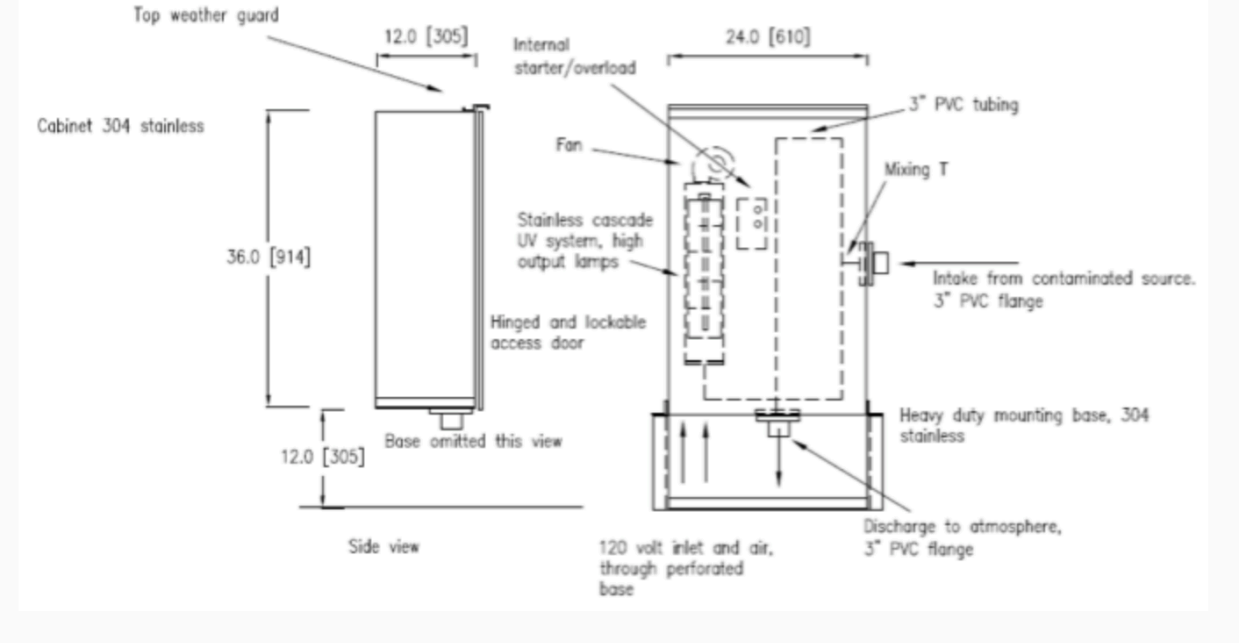

IN-PIPE TECHNOLOGY Because Efficiency Counts

Mechanism

The IPT-AOP-16 Odor Control Unit utilizes a high intensity UV light technology which when targeted on a hydrated Quad-Metallic target in a Ozone atmosphere creates Ozone, Hydroperoxides, Super Oxide Ions, Hydroxides and Ozonide Ions. The Ozone produced is a safe low concentration, produced by a targeted high intensity UV light technology. This method is far safer than the traditional ozone generators. Targeted UV ozone generators do not produce nitric oxide gas or nitric acid and they have a very high efficiency rating. The additional oxidizers provide a broader range of applications and redundant oxidation gases. All gases are very aggressive friendly gaseous oxidizers. The gaseous oxidizers produced revert back to oxygen and hydrogen after they oxidize the organics, bacteria, odor or gases.

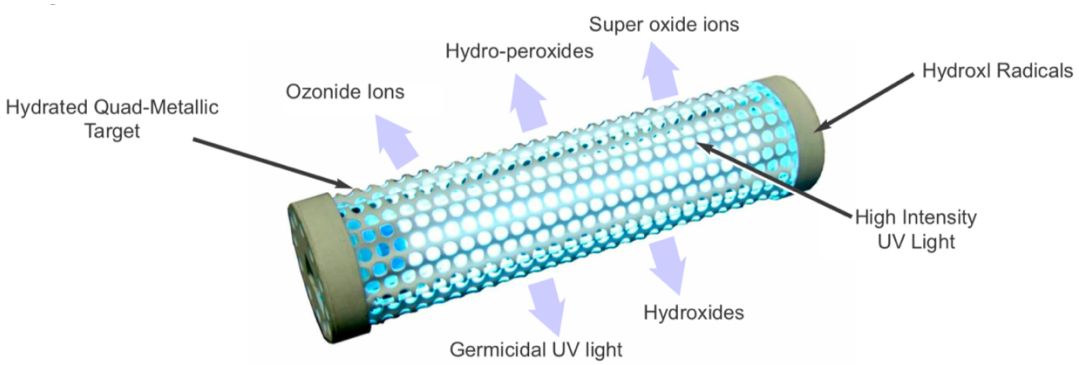

Lab results

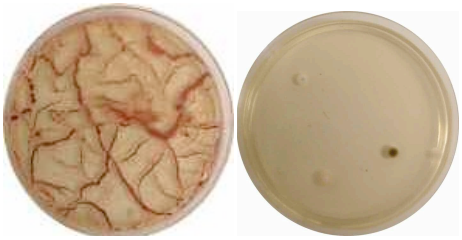

Figure 1. Before and after bacteria samples application of IPT-AOP-16 Odor Control Unit

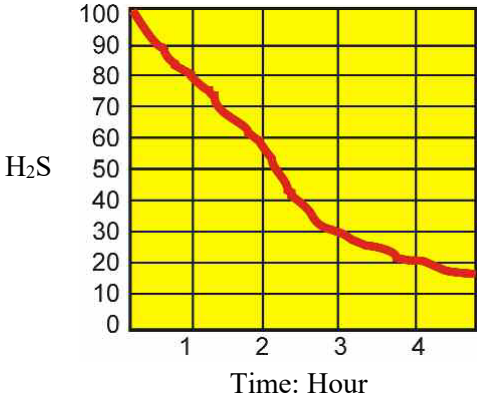

Figure 2. H_2S concentration changes plot as a function of time

IN-PIPE TECHNOLOGY Because Efficiency Counts

October 23, 2023

Mr. Airia Austin
Public Works Director
City of Opa-locka
780 Fisherman Street
Opa-locka, FL 33054

Dear Mr. Austin,

This letter is to confirm that the proprietary lift station odor control method used by In-Pipe Technology is a sole source product, provided exclusively by In-Pipe Technology. We are not aware of any other company that provides complete treatment of noxious gases (including hydrogen sulfide) exiting lift stations in substantially the same manner. This product must be purchased directly by the City from In-Pipe Technology. There are no agents or dealers authorized to resell this product in the State of Florida.

We are not aware of any similar or like product available to The City of Opa-locka would serve the same purpose or function.

If you desire additional information, don't hesitate to contact me at (630) 509-2488 at any time or visit our website at www.in-pipe.com. Thank you for your interest in our products and services.

Sincerely,

Douglas G Fagans
Chief Commercial Officer

725 N. Central Ave., Wood Dale, IL 60191 • Tel. (630) 509-2488 • Web: www.in-pipe.com

2024 FOREIGN LIMITED LIABILITY COMPANY ANNUAL REPORT

FILED
Feb 16, 2024
Secretary of State
4761069716CC

DOCUMENT# M17000005985

Entity Name: WASTEWATER ACQUISITION, LLC

Current Principal Place of Business:

725 N CENTRAL AVE
WOOD DALE, IL 60619

Current Mailing Address:

725 N CENTRAL AVE
WOOD DALE, IL 60619 US

FEI Number: 82-1135178

Certificate of Status Desired: No

Name and Address of Current Registered Agent:

CORPORATION SERVICE COMPANY
1201 HAYS STREET
TALLAHASSEE, FL 32301-2525 US

The above named entity submits this statement for the purpose of changing its registered office or registered agent, or both, in the State of Florida.

SIGNATURE: TESSA SCHWARZ 02/16/2024

Electronic Signature of Registered Agent — Date

Authorized Person(s) Detail :

Title	MEMBER, PRESIDENT, CEO	Title	MEMBER
Name	WEBER, BRYAN M.	Name	FAGANS, DOUG
Address	725 N CENTRAL AVE	Address	725 N CENTRAL AVE
City-State-Zip:	WOOD DALE IL 60619	City-State-Zip:	WOOD DALE IL 60619

I hereby certify that the information indicated on this report or supplemental report is true and accurate and that my electronic signature shall have the same legal effect as if made under oath; that I am a managing member or manager of the limited liability company or the receiver or trustee empowered to execute this report as required by Chapter 605, Florida Statutes; and that my name appears above, or on an attachment with all other like empowered.

SIGNATURE: BRYAN M. WEBER MEMBER 02/16/2024

Electronic Signature of Signing Authorized Person(s) Detail — Date

Sponsored by: Interim City Manager

RESOLUTION NO. _____

A RESOLUTION OF THE CITY COMMISSION OF THE CITY OF OPA-LOCKA, FLORIDA, AUTHORIZING THE INTERIM CITY MANAGER TO PIGGYBACK SOURCEWELL CONTRACT #120721-RVL WITH JET-VAC EQUIPMENT COMPANY, LLC FOR UNDERGROUND INFRASTRUCTURE INSPECTION AND REHABILITATION EQUIPMENT WITH RELATED SERVICES (SOURCEWELL RFP #120721), AND ENTER INTO AN AGREEMENT WITH JET-VAC EQUIPMENT COMPANY, LLC FOR THE PURCHASE OF A TRAILER MOUNTED SEWER SYSTEM CCTV INSPECTION UNIT, IN AN AMOUNT NOT TO EXCEED NINETY-SIX THOUSAND NINE HUNDRED EIGHTY-ONE DOLLARS AND SEVENTY-SIX CENTS ($96,981.76); PROVIDING FOR INCORPORATION OF RECITALS; PROVIDING FOR AN EFFECTIVE DATE

WHEREAS, the City of Opa-Locka's ("City") Public Works Department's sanitary sewer collection system has been found to be operating in a less than satisfactory condition. This insufficient operation hinders the Department from repairing cracks in the main lines, detect extraneous inflow/infiltration and/or illicit connections; and

WHEREAS, the Interim City Manager is recommending the purchase of a trailer mounted CCTV inspection system. The suggested system will allow the Department to conduct scheduled inspections of the collection systems and ensure that the system is providing optimal functionality; and

WHEREAS, City staff has identified Sourcewell Piggyback Contract No. 120721-RVL with Jet-Vac Equipment Company, LLC to purchase this equipment in an amount not to exceed $96,981.76; and

WHEREAS, deficiencies in the sewer collection system are generally made clear when a failure occurs or through the Five-Year Sanitary Sewer Evaluation Survey (SSES). The Survey assesses the system's inflow and infiltration levels against the maximum allowable thresholds; and

WHEREAS, proactively addressing these issues by conducting timely repairs and following recommendations to replace aging infrastructure can help prevent system failures; and

WHEREAS, the Interim City Manager is requesting approval from the City Commission to piggyback the Sourcewell Professional Services Agreement with Jet-Vac Equipment Company, LLC and recommend that the City Commission accept the

proposal from Jet-Vac Equipment Company, LLC, attached hereto as Exhibit "A", for the purchase of a trailer mounted sewer system CCTV inspection unit, in an amount not to exceed Ninety-Six Thousand, Nine Hundred Eighty-One Dollars and Seventy-Six Cents ($96,981.76); and

WHEREAS, Sourcewell previously awarded a contract to Jet-Vac Equipment Company, LLC for Underground Infrastructure Inspection and Rehabilitation Equipment with Related Services (attached as Exhibit "A"), pursuant to its Request for Proposals (RFP) No. 120721, for a one-year period commencing January 13, 2022 and expiring January 17, 2026, with the option of the parties to extend the agreement for one additional year; and

WHEREAS, pursuant to Section 2-318(3) of the City's Purchasing Code (as approved by Ordinance 2020-07) the City may purchase and acquire under contracts with the federal government, the State of Florida or its political subdivisions and also municipal co-operative purchasing organizations and programs and when the City Manager has determined that the prices of the original contract are competitive and reasonable; and

WHEREAS, the City Commission finds that it is in the best interests of the City to piggyback Sourcewell Contract #120721-RVL with Jet-Vac Equipment Company, LLC, attached hereto as Exhibit "B", in order to benefit from already negotiated rates and enter into an agreement, attached hereto as Exhibit "C", for the purchase of a trailer mounted sewer system CCTV inspection unit, as provided herein, in an amount not to exceed Ninety-Six Thousand Nine Hundred Eighty-One Dollars and Seventy-Six Cents ($96,981.76); and

NOW THEREFORE, BE IT RESOLVED BY THE CITY COMMISSION OF THE CITY OF OPA LOCKA, FLORIDA:

Section 1. RECITALS ADOPTED.
The recitals to the preamble herein are incorporated by reference.

Section 2. AUTHORIZATION
The City Commission of the City of Opa-Locka, Florida hereby authorizes the Interim City Manager to piggyback Sourcewell Contract #120721-RVL with Jet-Vac Equipment Company, LLC, attached hereto as Exhibit "B", in order to benefit from already negotiated rates and enter into an agreement, attached hereto as Exhibit "C", for the purchase of a trailer mounted sewer system CCTV inspection unit, as provided herein, in an amount not to exceed Ninety-Six Thousand, Nine Hundred Eighty-One Dollars and Seventy-Six Cents ($96,981.76).

SECTION 3. SCRIVENER'S ERRORS.

Sections of this Resolution may be renumbered or re-lettered and corrections of typographical errors which do not affect the intent may be authorized by the City Manager, or the City Manager's designee, following review by the City Attorney, without need of public hearing, by filing a corrected copy of same with the City Clerk.

Section 4. EFFECTIVE DATE.

This Resolution shall take effect upon the adoption and is subject to the approval of the Governor or Governor's Designee.

PASSED and **ADOPTED** this _____ day of _____, 2024.

_____
John Taylor, Mayor

ATTEST:

_____
Joanna Flores, City Clerk

APPROVED AS TO FORM
AND LEGAL SUFFICIENCY:

_____
Burnadette Norris-Weeks, P.A.
City Attorney

Moved by: _____

Seconded by: _____

VOTE:

Commissioner Bass _____
Commissioner Santiago _____
Commissioner Ervin _____
Vice Mayor Kelley _____
Mayor Taylor _____

City of Opa-locka
Agenda Cover Memo

Department Director:	Airia Austin			**Department Director Signature:**		
Interim City Manager:	Sha'mecca Lawson			**ICM Signature**		
Commission Meeting Date:	12.11.2024		**Item Type:** *(Enter X in box)*	**Resolution**	**Ordinance**	**Other**
				X		
Fiscal Impact: *(Enter X in box)*	**Yes**	**No**	**Resolution Reading:** *(Enter X in box)*		**1st Reading**	**2nd Reading**
					X	
	X		**Public Hearing:** *(Enter X in box)*		**Yes** / **No**	**Yes** / **No**
					X	X
Funding Source: *Account#:*	*(Enter Fund & Dept)* Ex: N/A See Financial Impact section below		**Advertising Requirement:** *(Enter X in box)*		**Yes**	**No**
					X	
ILA Required: *(Enter X in box)*	**Yes**	**No**	**RFP/RFQ/Bid#:**			
	X					
Strategic Plan Related *(Enter X in box)*	**Yes**	**No**	**Strategic Plan Priority Area:** **Enhance Organizational** ☐ **Bus. & Economic Dev** ■ **Public Safety** ☐ **Quality of Education** ☐ **Qual. of Life & City Image** ☐ **Communication** ☐		**Strategic Plan Obj./Strategy:** *(list the specific objective/strategy this item will address)*	
	X					
Sponsor Name	Interim City Manager		**Department:** Planning & Community Development		City Manager	

Short Title:

A RESOLUTION OF THE CITY COMMISSION OF THE CITY OF OPA-LOCKA AUTHORIZING THE INTERIM CITY MANAGER TO PIGGYBACK SOURCEWELL AGREEMENT # 120721-RVL WITH JET-VAC EQUIPMENT COMPANY FOR THE PURCHASE OF A SEWER SYSTEM CLOSED-CIRCUIT TELEVISION (CCTV) INSPECTION UNIT.

Staff Summary:

The Public Works Department's sanitary sewer collection system has been found to be operating in a less than satisfactory condition. This hinders the Department from being able to repair cracks in the main lines, detect extraneous inflow/infiltration and/or illicit connections. We are therefore requesting to purchase a trailer mounted CCTV inspection system. This will enable the Sewer Division to conduct scheduled inspections of our collection systems and ensure that the system is providing optimal functionality. Staff have identified a Sourcewell piggyback contract No. 120721-RVL with Jet-Vac Equipment Company, LLC to purchase this equipment in an amount not to exceed $96,981.76.

HISTORY – Staff are typically made aware of deficiencies in the sewer collection system either when a failure occurs or through the Five-Year Sanitary Sewer Evaluation Survey (SSES). This survey assesses the system's inflow and infiltration levels against the maximum allowable thresholds. Proactively addressing these issues by conducting timely repairs and following recommendations to replace aging infrastructure can help prevent system failures.

Financial Impact: The purchase of the CCTV system was allocated in the FY 25 adopted budget in the following account:

Account	Description	Available	Expenditure	Remaining Balance
35-535640	Machinery & Equipment	$175,000.00	$96,981.76	$78,018.24

This is a one-time, budgeted expenditure and does not have any long-term or ongoing impact on fund balances.

Proposed Action:

Staff recommend the City Commission authorize the Interim City Manager to issue a piggyback the Sourcewell agreement with Jet-Vac Equipment Company, LLC to purchase a trailer mounted CCTV inspection system.

Attachment:

Agenda Cover
Jet-Vac Equipment Company, LLC Proposal
Sourcewell bid sheet

CITY OF OPA-LOCKA AGREEMENT FOR THE PURCHASE OF A TRAILER MOUNTED SEWER SYSTEM CCTV INSPECTION UNIT

(Underground Infrastructure Inspection and Rehabilitation Equipment with Related Services Piggyback Competitive Award)

This Agreement is made this ____ day of _____, 2024, between the City of Opa-Locka, a municipal corporation organized and existing under the laws of the State of Florida and whose address is 780 Fisherman Street, Opa-Locka, Florida 33054 (the **"City"),** and Jet-Vac Equipment Company, LLC whose address is 5746 Broad St., Sumter, SC 29154 (the **"Contractor").**

WITNESSETH

WHEREAS, the Contractor desires to enter into this Agreement ("Agreement") with City for the purchase of a trailer mounted sewer system CCTV inspection unit (the "Project"); and

WHEREAS, the parties desire to incorporate the terms and conditions of the solicitation and contractual arrangement between Sourcewell and the Contractor, as set forth in the Sourcewell Request for Proposals (RFP) No. 120721 ("the RFP"); and

WHEREAS, the City Code provides authority for the City to select and contract through the use of the competitive bid process of another government entity as an exception to the otherwise required formal bidding process.

NOW THEREFORE, in consideration of the mutual covenants set forth in this Agreement, the receipt and sufficiency of which is acknowledged, the parties agree as follows:

Section 1. Term. The term of this Agreement commences upon fully execution of this agreement and continues through January 17, 2026, unless terminated earlier by its terms.

Section 2. Contract Terms. The Contractor agrees to provide the City with a trailer mounted sewer system CCTV inspection unit in accordance with the City's requirements as set forth herein and the Standard Contract between Sourcewell and the Contractor dated on or about January 13, 2022 (the "Sourcewell Agreement"), attached hereto and incorporated herein as Exhibit "A". The exhibits are incorporated into this Agreement for all purposes, and are collectively referred to as the "Contract Documents", and represent the entire agreement between the parties. In the event of conflict between or among the Contract Documents, the order of priority shall be: this Agreement, the Sourcewell Agreement and the Contractor's accepted proposal.

Section 3. Scope of Work

The following provisions are included:

A. City shall pay Contractor no more than the unit prices set forth in the Contract Documents and in accordance with the provisions of the Contract Documents. If the City requires services not covered by unit prices already made a part of the Contract Documents, the Contractor shall submit a detailed written proposal to the authorized City representative before providing any such services. For these purposes, Airia Austin, as Public Works Director, shall be the City Representative and may be reached at 305-953-2868 Ext 1450.

B. If permits are required, Contractor shall submit complete and accurate permit applications to all applicable permitting agencies within ten work days of receiving from the City all documents necessary to file such permit applications. The City shall pay all permit and related fees directly to the permitting agencies, including any permit fees charged by the City.

C. The City of Opa-Locka shall be substituted for the Sourcewell with regard to any and all provisions of the Sourcewell Agreement, the RFP, and the Contractor's bid, including by example and not limitation, with regard to bond requirements, insurance, indemnification, licensing, termination, default and ownership of documents. All recitals, representations, and warranties of Contractor made in those documents are restated as if set forth fully herein, made for the benefit of the City, and incorporated herein.

D. Contractor shall not commence work on the Project unless and until the requirements for insurance have been fully met by Contractor and appropriate evidence thereof, in the City's sole discretion, has been provided to and approved by the City.

Section 4. Assignment. Neither party may assign its rights or obligations under this Agreement without the consent of the other.

Section 5. Notice. Notice hereunder shall be provided in writing by certified mail, return receipt requested, or customarily used overnight transmission with proof of delivery, to the following parties, with mandatory copies, as provided below:

For City: Sha'mecca Lawson, Interim City Manager
City of Opa-Locka
780 Fisherman Street
Opa-Locka, Florida, Florida 33054

Copy To: Burnadette Norris-Weeks, Esq.
City Attorney
Burnadette Norris-Weeks, P.A.
401 NW 7th Avenue
Fort Lauderdale, Florida 33311

For Contractor: Justin Kohl
Jet-Vac Equipment Company, LLC
5746 Broad St., Sumter, SC 29154

Copy To: Cogency Global Inc.
115 N. Calhoun St., Ste. 4
Tallahassee, FL 32301

Section 5. Severability. This Agreement sets forth the entire agreement between Contractor and City with respect to the subject matter of this Agreement. This Agreement supersedes all prior and contemporaneous negotiations, understandings and agreements, written or oral, between the parties. This Agreement may not be modified except by the parties' mutual agreement set forth in writing and signed by the parties.

Section 6. E-verify. In accordance with Florida Statutes §448.095, the Contractor, prior to commencement of services or payment by the City, will provide to the City proof of participation/ enrollment in the EVerify system of the Department of Homeland Security. Evidence of participation/enrollment will be a printout of the Company's "Company Profile" page from the Everify system. Failure to be continually

enrolled and participating in the E-Verify program will be a breach of contract which will be grounds for immediate termination of the contract by the City. The Consultant will not hire any employee who has not been vetted through E-Verify. The Contractor may not subcontract any work for the City to any subcontractor that has not provided an affidavit stating that the subcontractor does not employ, contract with or subcontract with an unauthorized alien.

IF CONSULTANT HAS QUESTIONS REGARDING THE APPLICATION OF CHAPTER 119, FLORIDA STATUTES, TO CONSULTANT'S DUTY TO PROVIDE PUBLIC RECORDS RELATING TO THIS AGREEMENT, CONTACT THE CUSTODIAN OF PUBLIC RECORDS AT (305) 953-2800, email: jflores@Opalockafl.gov OR BY MAIL: City of Opa-locka – City Clerk's Office, 780 Fisherman Street, Opa-Locka, FL 33054

IN WITNESS WHEREOF, the parties hereto have accepted, made and executed this Agreement upon the terms and conditions above stated on the day and year first above written.

[REMAINDER OF PAGE LEFT INTENTIONALLY BLANK]

CITY: City of Opa-Locka

Date:_____

By:_____
Sha'mecca Lawson, Interim City Manager

APPROVED AS TO FORM AND
LEGAL SUFFICIENCYFOR THE USE
OF AND RELIANCE
BY THE CITY OF OPA-LOCKA ONLY:

By:_____
City Attorney
Burnadette Norris-Weeks, P.A.

By:_____
Joanna Flores, City Clerk

CONTRACTOR:
Jet-Vac Equipment Company, LLC

By: _____ Witness:_____

_____ _____
PRINT NAME

Date:_____

_____
TITLE

Date:_____

JET-VAC Equipment Company, LLC

5746 Broad Street
SUMTER, SC 29154

4036 Bennett Road
COOKEVILLE, TN 38506

5500 S Cobb Drive, Bld 200, Suite 210
ATLANTA, GA 30339

1350 Sheeler Avenue, Building 12, Unit 7
APOPKA, FL 32703

www.jet-vac.com

Ship To: City of Opa-Locka
Public Works & Utilities
12950 Nw 42nd Ave
Opa Locka,FL 33054-4403

Invoice To: City of Opa-Locka
Attn: Accounts Payable*
payables@opalockafl.gov
Opa Locka FL 33054

Attention: Ronnie King

Branch		
60 - POMPANO		
Date	Time	Page
11/08/2024	9:02:23 (O)	1
Account No	Phone No	Est No 01
OPALO001	3053212595	Q00145
Ship Via	Purchase Order	
Delivered		
Tax ID No		
	Salesperson	
	TG1 / HH1	

EQUIPMENT ESTIMATE - NOT AN INVOICE

Description	** Q U O T E **	EXPIRY DATE: 12/31/2024	Amount
**********			
Sourcewell Contract #101221-RGO			
Ring-O-Matic - Sewer Vacuum			
Maturity Date: 11/29/2025			
**********			
ORION Zoom PAN & TILT CAMERA			20865.00
T66.1 Camera Tractor			13507.00
BP100 Control Console			11624.00
KW 206 Cable Drum + Boom			20284.00
KW206 CAMERA CABLE TYPE 524/11 656 FEET			4940.00
RAPIDVIEW ECOTRAILER			19703.00
	ADDITIONAL PARTS		
	==========		
Pressure Test S 901601040	Qty: 1	Price: 529.00	529.00
Additnl Weight 905211031	1	781.00	781.00
KUV 2.7 Cable D 904350020	1	756.00	756.00
MONIT 17" 4:3 VZM000100	1	675.00	675.00
Low Profile KW VZ000305	1	1390.00	1390.00
T66.1 CAM CONT 905235001	1	1802.00	1802.00
	Miscellaneous Charges/Credits		
	==========		
EQP SOURCEWELL DISCOUNT	Qty: 1	Price: 3874.24	3874.24-
TRAINING	1	3500.00	3500.00
EQP SHIPPING	1	500.00	500.00
		Subtotal:	96981.76

Accounts not paid within 30 days of the date of the invoice are subject to a 1.5% monthly finance charge.

Thank You For Your Business!

JET-VAC Equipment Company, LLC

5746 Broad Street
SUMTER, SC 29154

4036 Bennett Road
COOKEVILLE, TN 38506

5500 S Cobb Drive, Bld 200, Suite 210
ATLANTA, GA 30339

1350 Sheeler Avenue, Building 12, Unit 7
APOPKA, FL 32703

www.jet-vac.com

Ship To: City of Opa-Locka
Public Works & Utilities
12950 Nw 42nd Ave
Opa Locka,FL 33054-4403

Invoice To: City of Opa-Locka
Attn: Accounts Payable*
payables@opalockafl.gov
Opa Locka FL 33054

Attention: Ronnie King

Branch		
60 - POMPANO		
Date: 11/08/2024	Time: 9:02:23 (O)	Page: 2
Account No: OPALO001	Phone No: 3053212595	Est No: 01 Q00145
Ship Via: Delivered	Purchase Order:	
Tax ID No:		
		Salesperson: TG1 / HH1

EQUIPMENT ESTIMATE - NOT AN INVOICE

Description ** Q U O T E ** EXPIRY DATE: 12/31/2024 Amount

Authorization: _____ Quote Total: 96981.76

Accounts not paid within 30 days of the date of the invoice are subject to a 1.5% monthly finance charge.

Thank You For Your Business!

#120721-RVL

Sourcewell Formerly NJPA, Rapidview IBAK North America, and Jet-Vac Equipment Company, LLC have come together to offer the 30 minute equipment purchasing solution for your government agency.

Sourcewell Formerly NJPA has solicited bids on behalf of its members in the category of Sewer, Water and Industrial Inspection Cameras. Bidders were graded on a 1000 point scale in categories such as price, warranty terms, product quality, ecofriendly practices, value added attributes, and product selection. Based on its point total, Rapidview IBAK North America has been awarded contract #120721-RVL which includes access to the following types of goods and services:

- Professional Sewer, Water & Industrial Cameras
- Sewer Pipe Rehabilitation Robotics
- Sewer Inspection Software

The most commonly asked question is, "Am I able to use the results of this bid to purchase my equipment?" The answer is YES, and it is based on two important, but simple principles:

1. The joint powers provision, present in every state law, dictates that what two units of government can individually do for themselves, one can do for the other. In essence, Sourcewell Formerly NJPA has conducted a competitive bid, and your government agency can use the results.
2. Sourcewell Formerly NJPA is a government entity. All Sourcewell Formerly NJPA employees are public employees who are required to pay into the Public Employment Retirement Association (PERA) through payroll deduction.

After choosing your desired equipment and receiving a Sourcewell Formerly NJPA price quotation from Jet-Vac Equipment Company, LLC, simply follow these steps:

1. If your municipality or organization is not already a member, sign up for your no cost, no obligation membership by clicking the maroon "join now" icon on the Sourcewell Formerly NJPA home page: you will receive your membership number within 24 hours.
2. Issue a purchase order to Jet-Vac Equipment Company, LLC referencing Rapidview IBAK North America contract # 120721-RVL and your membership number.

That's it! Sourcewell Formerly NJPA, Rapidview IBAK North America, and Jet-Vac Equipment Company, LLC will handle the rest.

RFP #120721
REQUEST FOR PROPOSALS
for
Underground Infrastructure Inspection and Rehabilitation Equipment with Related Services

Proposal Due Date: December 7, 2021, 4:30 p.m., Central Time

Sourcewell, a State of Minnesota local government unit and service cooperative, is requesting proposals for Underground Infrastructure Inspection and Rehabilitation Equipment with Related Services to result in a contracting solution for use by its Participating Entities. Sourcewell Participating Entities include thousands of governmental, higher education, K-12 education, nonprofit, tribal government, and other public agencies located in the United States and Canada. A full copy of the Request for Proposals can be found on the Sourcewell Procurement Portal [https://proportal.sourcewell-mn.gov]. Only proposals submitted through the Sourcewell Procurement Portal will be considered. Proposals are due no later than December 7, 2021, at 4:30 p.m. Central Time, and late proposals will not be considered.

Solicitation Schedule

Public Notice of RFP Published:	October 19, 2021
Pre-proposal Conference:	November 9, 2021, 10:00 a.m., Central Time
Question Submission Deadline:	November 29, 2021, 4:30 p.m., Central Time
Proposal Due Date:	**December 7, 2021**, 4:30 p.m., Central Time Late responses will not be considered.
Opening:	December 7, 2021, 6:30 p.m., Central Time See RFP Section V.G. "Opening"

I. ABOUT SOURCEWELL

A. SOURCEWELL

Sourcewell is a State of Minnesota local government unit and service cooperative created under the laws of the State of Minnesota (Minnesota Statutes Section 123A.21) that facilitates a competitive public solicitation and contract award process for the benefit of its 50,000+ participating entities across the United States and Canada. Sourcewell's solicitation process complies with State of Minnesota law and policies, conforms to Canadian trade agreements, and results in cooperative purchasing solutions from which Sourcewell's Participating Entities procure equipment, products, and services.

Cooperative purchasing provides participating entities and suppliers increased administrative efficiencies and the power of combined purchasing volume that result in overall cost savings. At times, Sourcewell also partners with other purchasing cooperatives to combine the purchasing volume of their membership into a single solicitation and contract expanding the reach of contracted suppliers' potential pool of end users.

Sourcewell uses a website-based platform, the Sourcewell Procurement Portal, through which all proposals to this RFP must be submitted.

B. USE OF RESULTING CONTRACTS

In the United States, Sourcewell's contracts are available for use by:

- Federal and state government entities;
- Cities, towns, and counties/parishes;
- Education service cooperatives;
- K-12 and higher education entities;
- Tribal government entities;
- Some nonprofit entities; and
- Other public entities.

In Canada, Sourcewell's contracts are available for use by:

- Provincial and territorial government departments, ministries, agencies, boards, councils, committees, commissions, and similar agencies;
- Regional, local, district, and other forms of municipal government, municipal organizations, school boards, and publicly-funded academic, health, and social service entities referred to as MASH sector (this should be construed to include but not be limited to the Cities of Calgary, Edmonton, Toronto, Ottawa, and Winnipeg), as well as any corporation or entity owned or controlled by one or more of the preceding entities;
- Crown corporations, government enterprises, and other entities that are owned or controlled by these entities through ownership interest;

- Members of the Rural Municipalities of Alberta (RMA) and their represented Associations: MASH (municipalities, academic institutions, schools and hospitals) and MUSH (municipalities, universities, schools and hospitals) sectors, and other governmental agencies eligible to use the Sourcewell contracts. MASH and MUSH sector refers to regional, local, district or other forms of municipal government, school boards, publicly-funded academic, health and social service entities, as well as any corporation or entity owned or controlled by one or more of the preceding entities, including but not limited to represented associations, Saskatchewan Association of Rural Municipalities ("SARM"), Association of Manitoba Municipalities ("AMM"), Local Authorities Services/Association of Municipalities Ontario ("LAS/AMO", excluding the cities of Toronto and Ottawa), Nova Scotia Federation of Municipalities ("NSFM"), Federation of Prince Edward Island Municipalities ("FPEIM"), Municipalities Newfoundland Labrador ("MNL"), Union of New Brunswick Municipalities ("UNBM"), North West Territories Association of Communities ("NWTAC") and their members. RMA Participants may include all not-for-profit agencies for Canadian provinces and territories.

For a listing of current United States and Canadian Participating Entities visit Sourcewell's website (note: there is a tab for each country): https://www.sourcewell-mn.gov/sourcewell-for-vendors/agency-locator.

Participating Entities typically access contracted equipment, products, or services through a purchase order issued directly to the contracted supplier. A Participating Entity may request additional terms or conditions related to a purchase. Use of Sourcewell contracts is voluntary and Participating Entities retain the right to obtain similar equipment, products, or services from other sources.

To meet Participating Entities' needs, Sourcewell broadly publishes public notice of all solicitation opportunities, including this RFP. In the United States each state-level procurement department receives notice for possible re-posting.

Proof of publication will be available at the conclusion of the solicitation process.

II. SOLICITATION DETAILS

A. SOLUTIONS-BASED SOLICITATION

This RFP and contract award process is a solutions-based solicitation; meaning that Sourcewell is seeking equipment, products, or services that meet the general requirements of the scope of this RFP and that are commonly desired or are required by law or industry standards.

B. REQUESTED EQUIPMENT, PRODUCTS, OR SERVICES

It is expected that proposers will offer a wide array of equipment, products, or services at lower prices and with better value than what they would ordinarily offer to a single government entity, a school district, or a regional cooperative.

1. Sourcewell is seeking proposals for Underground Infrastructure Inspection and Rehabilitation Equipment with Related Services intended for the inspection, assessment, or rehabilitation of pipes, pipelines, manholes, basins, tanks, and stations, including, but not limited to:

a. Video, imaging, scope, and sensor equipment;
b. Flow and leak testing, detection, and monitoring equipment and tools;
c. Underground infrastructure rehabilitation equipment; and,
d. Products, accessories, supplies, parts, technology, software, and services related to the offering of the solutions in subsections 1. a. – c. above.

2. The primary focus of this solicitation is on Underground Infrastructure Inspection and Rehabilitation Equipment with Related Services. This solicitation should NOT be construed to include equipment principally intended for the cleaning of sewer lines, catch basins, and storm sewers.

3. This solicitation does not include those equipment, products, or services covered under categories included in contracts currently maintained by Sourcewell:

a. Trailers with Related Equipment, Accessories, and Services (RFP #121918), except trailer-mounted solutions identified in subsections 1. a. – c. above;
b. Heavy Construction Equipment with Related Accessories, Attachments, and Supplies (RFP #032119);
c. Medium Duty and Compact Construction Equipment with Related Attachments, Accessories, and Supplies (RFP #040319);
d. Portable Construction Equipment with Related Accessories and Attachments (RFP #041719);
e. Sewer Vacuum, Hydro-Excavation, and Municipal Pumping Equipment with Related Accessories and Supplies (RFP #101221); and,
f. Public Utility Equipment with Related Accessories and Supplies (RFP #110421).

Proposers may include related equipment, accessories, and services to the extent that these solutions are complementary to the equipment, products, or service(s) being proposed.

Generally, the solutions for Participating Entities are turn-key solutions, providing a combination of equipment, products and services, delivery, and installation to a properly operating status. However, equipment or products only solutions may be appropriate for

situations where Participating Entities possess the ability, either in-house or through local third-party contractors, to properly install and bring to operation the equipment or products being proposed.

Sourcewell prefers suppliers that provide a sole source of responsibility for the equipment, products, and services provided under a resulting contract. If proposer is including the equipment, products, and services of its subsidiary entities, the proposer must also identify all included subsidiaries in its proposal. If proposer requires the use of distributors, dealers, resellers, or subcontractors to provide the equipment, products, or services, the proposal must address how the equipment, products or services will be provided to Participating Entities, and describe the network of distributors, dealers, resellers, and/or subcontractors that will be available to serve Participating Entities under a resulting contract.

Sourcewell desires the broadest possible selection of equipment, products, and services being proposed over the largest possible geographic area and to the largest possible cross-section of Sourcewell current and future Participating Entities.

C. REQUIREMENTS

It is expected that proposers have knowledge of all applicable industry standards, laws, and regulations and possess an ability to market and distribute the equipment, products, or services to Participating Entities.

1. Safety Requirements. All items proposed must comply with current applicable safety or regulatory standards or codes.
2. Deviation from Industry Standard. Deviations from industry standards must be identified with an explanation of how the equipment, products, and services will provide equivalent function, coverage, performance, and/or related services.
3. New Equipment and Products. Proposed equipment and products must be for new, current model; however, proposer may offer certain close-out equipment or products if it is specifically noted in the Pricing proposal.
4. Delivered and operational. Unless clearly noted in the proposal, equipment and products must be delivered to the Participating Entity as operational.
5. Warranty. All equipment, products, supplies, and services must be covered by a warranty that is the industry standard or better.

D. ANTICIPATED CONTRACT TERM

Sourcewell anticipates that the term of any resulting contract(s) will be four years, with an optional one year extension that may be offered based on the best interests of Sourcewell and its Participating Entities.

E. ESTIMATED CONTRACT VALUE AND USAGE

Based on past volume of similar contracts, the estimated annual value of all transactions from contracts resulting from this RFP are anticipated to be USD $10 Million; therefore, proposers are expected to propose volume pricing. Sourcewell anticipates considerable activity under the contract(s) awarded from this RFP; however, sales and sales volume from any resulting contract are not guaranteed.

F. MARKETING PLAN

Proposer's sales force will be the primary source of communication with Participating Entities. The proposer's Marketing Plan should demonstrate proposer's ability to deploy a sales force or dealer network to Participating Entities, as well as proposer's sales and service capabilities. It is expected that proposer will promote and market any contract award.

G. ADDITIONAL CONSIDERATIONS

1. Contracts will be awarded to proposers able to best meet the need of Participating Entities. Proposers should submit their complete line of equipment, products, or services that are applicable to the scope of this RFP.
2. Proposers should include all relevant information in its proposal, since Sourcewell cannot consider information that is not included in the proposal. Sourcewell reserves the right to verify proposer's information and may request clarification from a proposer, including samples of the proposed equipment or products.
3. Depending upon the responses received in a given category, Sourcewell may need to organize responses into subcategories in order to provide the broadest coverage of the requested equipment, products, or services to Participating Entities. Awards may be based on a subcategory.
4. A proposer's documented negative past performance with Sourcewell or its Participating Entities occurring under a previously awarded Sourcewell contract may be considered in the evaluation of a proposal.

III. PRICING

A. REQUIREMENTS

All proposed pricing must be:

1. Either Line-Item Pricing or Percentage Discount from Catalog Pricing, or a combination of these:
   a. **Line-item Pricing** is pricing based on each individual product or services**.** Each line must indicate the proposer's published "List Price," as well as the "Contract Price."

b. **Percentage Discount from Catalog or Category** is based on a percentage discount from a catalog or list price, defined as a published Manufacturer's Suggested Retail Price (MSRP) for the products or services. Individualized percentage discounts can be applied to any number of defined product groupings. Proposers will be responsible for providing and maintaining current published MSRP with Sourcewell, and this pricing must be included in its proposal and provided throughout the term of any Contract resulting from this RFP.

2. The proposer's not to exceed price. A not to exceed price is the highest price for which equipment, products, or services may be billed to a Participating Entity. However, it is permissible for suppliers to sell at a price that is lower than the contracted price.
3. Stated in U.S. and Canadian dollars (as applicable).
4. Clearly understandable, complete, and fully describe the total cost of acquisition (e.g., the cost of the proposed equipment, products, and services delivered and operational for its intended purpose in the Participating Entity's location).

Proposers should clearly identify any costs that are NOT included in the proposed product or service pricing. This may include items such as installation, set up, mandatory training, or initial inspection. Include identification of any parties that impose such costs and their relationship to the proposer. Additionally, proposers should clearly describe any unique distribution and/or delivery methods or options offered in the proposal.

B. ADMINISTRATIVE FEES

Proposers are expected to pay to Sourcewell an administrative fee in exchange for Sourcewell facilitating the resulting contracts. The administrative fee is normally calculated as a percentage of the total sales to Participating Entities for all contracted equipment, products, or services made during a calendar quarter, and is typically one percent (1%) to two percent (2%). In some categories, a flat fee may be an acceptable alternative.

IV. CONTRACT

Proposers awarded a contract will be required to execute a contract with Sourcewell (see attached template). Only those modifications the proposer indicates in its proposal will be available for discussion. Much of the language in the Contract reflects Minnesota legal requirements and cannot be altered. Numerous and/or onerous exceptions that contradict Minnesota law may result in the proposal being disqualified from further review and evaluation.

To request a modification to the template Contract, a proposer must submit the Exceptions to Terms, Conditions, or Specifications table with its proposal. Only those exceptions noted at the time of the proposal submission will be considered.
Exceptions must:

1. Clearly identify the affected article and section.

2. Clearly note the requested modification; and as applicable, provide requested alternative language.

Unclear requests will be automatically denied.

Only those exceptions that have been accepted by Sourcewell will be included in the contract document provided to the awarded supplier for signature.

If a proposer receives a contract award resulting from this solicitation it will have up to 30 days to sign and return the contract. After that time, at Sourcewell's sole discretion, the contract award may be revoked.

V. RFP PROCESS

A. PRE-PROPOSAL CONFERENCE

Sourcewell will hold an optional, non-mandatory pre-proposal conference via webcast on the date and time noted in the Solicitation Schedule for this RFP and on the Sourcewell Procurement Portal. The purpose of this conference is to allow potential proposers to ask questions regarding this RFP and Sourcewell's competitive contracting process. Information about the webcast will be sent to all entities that have registered for this solicitation opportunity through their Sourcewell Procurement Portal Supplier Account. Pre-proposal conference attendance is optional.

B. QUESTIONS REGARDING THIS RFP AND ORAL COMMUNICATION

All questions regarding this RFP must be submitted through the Sourcewell Procurement Portal. The deadline for submission of questions is found in the Solicitation Schedule and on the Sourcewell Procurement Portal. Answers to questions will be issued through an addendum to this RFP. Repetitive questions will be summarized into a single answer and identifying information will be removed from the submitted questions.

All questions, whether specific to a proposer or generally related to the RFP, must be submitted using this process. Do not contact individual Sourcewell staff to ask questions or request information as this may disqualify the proposer from responding to this RFP. Sourcewell will not respond to questions submitted after the deadline.

C. ADDENDA

Sourcewell may modify this RFP at any time prior to the proposal due date by issuing an addendum. Addenda issued by Sourcewell become a part of the RFP and will be delivered to potential proposers through the Sourcewell Procurement Portal. Sourcewell accepts no liability in connection with the delivery of any addenda.

Before a proposal will be accepted through the Sourcewell Procurement Portal, all addenda, if any, must be acknowledged by the proposer by checking the box for each addendum. It is the responsibility of the proposer to check for any addenda that may have been issued up to the solicitation due date and time.

If an addendum is issued after a proposer submitted its proposal, the Sourcewell Procurement Portal will WITHDRAW the submission and change the proposer's proposal status to INCOMPLETE. The proposer can view this status change in the "MY BIDS" section of the Sourcewell Procurement Portal Supplier Account. The proposer is solely responsible to check the "MY BIDS" section of the Sourcewell Procurement Portal Supplier Account periodically after submitting its proposal (and up to the Proposal Due Date). If the proposer's proposal status has changed to INCOMPLETE, the proposer is solely responsible to:

i) make any required adjustments to its proposal;
ii) acknowledge the addenda; and
iii) ensure the re-submitted proposal is received through the Sourcewell Procurement Portal no later than the Proposal Due Date and time shown in the Solicitation Schedule above.

D. PROPOSAL SUBMISSION

Proposer's complete proposal must be submitted through the Sourcewell Procurement Portal no later than the date and time specified in the Solicitation Schedule. Any other form of proposal submission, whether electronic, paper, or otherwise, will not be considered by Sourcewell. **Late proposals will not be considered.** It is the proposer's sole responsibility to ensure that the proposal is received on time.

It is recommended that proposers allow sufficient time to upload the proposal and to resolve any issues that may arise. The time and date that a proposal is received by Sourcewell is solely determined by the Sourcewell Procurement Portal web clock.

In the event of problems with the Sourcewell Procurement Portal, follow the instructions for technical support posted in the portal. It may take up to 24 hours to respond to certain issues.

Upon successful submission of a proposal, the Sourcewell Procurement Portal will automatically generate a confirmation email to the proposer. If the proposer does not receive a confirmation email, contact Sourcewell's support provider at support@bidsandtenders.ca.

To ensure receipt of the latest information and updates via email regarding this solicitation, or if the proposer has obtained this solicitation document from a third party, the onus is on the proposer to create a Sourcewell Procurement Portal Supplier Account and register for this solicitation opportunity.

Within the Sourcewell Procurement Portal, all proposals must be digitally acknowledged by an authorized representative of the proposer attesting that the information contained in in the

proposal is true and accurate. By submitting a proposal, proposer warrants that the information provided is true, correct, and reliable for purposes of evaluation for potential contract award. The submission of inaccurate, misleading, or false information is grounds for disqualification from a contract award and may subject the proposer to remedies available by law.

E. GENERAL PROPOSAL REQUIREMENTS

Proposals must be:

- In substantial compliance with the requirements of this RFP or it will be considered nonresponsive and be rejected.
- Complete. A proposal will be rejected if it is conditional or incomplete.
- Submitted in English.
- Valid and irrevocable for 90 days following the Proposal Due Date.

Any and all costs incurred in responding to this RFP will be borne by the proposer.

F. PROPOSAL WITHDRAWAL

Prior to the proposal deadline, a proposer may withdraw its proposal.

G. OPENING

The Opening of proposals will be conducted electronically through the Sourcewell Procurement Portal. A list of all proposers will be made publicly available in the Sourcewell Procurement Portal after the Proposal Due Date, but no later than the Opening time listed in the Solicitation Schedule.

To view the list of proposers, verify that the Sourcewell Procurement Portal opportunities list search is set to “All” or “Closed.” The solicitation status will automatically change to “Closed” after the Proposal Due Date and Time.

VI. EVALUATION AND AWARD

A. EVALUATION

It is the intent of Sourcewell to award one or more contracts to responsive and responsible proposers offering the best overall quality, selection of equipment, products, and services, and price that meet the commonly requested specifications of Sourcewell and its Participating Entities. The award(s) will be limited to the number of proposers that Sourcewell determines is necessary to meet the needs of its Participating Entities. Factors to be considered in determining the number of contracts to be awarded in any category may include the following:

- The number of and geographic location of:

- Proposers necessary to offer a comprehensive selection of equipment, products, or services for Participating Entities' use.
- A proposer's sales and service network to assure availability of product supply and coverage to meet Participating Entities' anticipated needs.

- Total evaluation scores.
- The attributes of proposers, and their equipment, products, or services, to assist Participating Entities achieve environmental and social requirements, preferences, and goals.

Information submitted as part of a proposal should be as specific as possible when responding to the RFP. Do not assume Sourcewell has any knowledge about a specific supplier or product.

B. AWARD(S)

Award(s) will be made to the proposer(s) whose proposal conforms to all conditions and requirements of the RFP, and consistent with the award criteria defined in this RFP.

Sourcewell may request written clarification of a proposal at any time during the evaluation process.

Proposal evaluation will be based on the following scoring criteria and the Sourcewell Evaluator Scoring Guide (a copy is available in the Sourcewell Procurement Portal):

Conformance to RFP Requirements	50
Financial Viability and Marketplace Success	75
Ability to Sell and Deliver Service	100
Marketing Plan	50
Value Added Attributes	75
Warranty	50
Depth and Breadth of Offered Equipment, Products, or Services	200
Pricing	400
TOTAL POINTS	**1000**

C. PROTESTS OF AWARDS

Any protest made under this RFP by a proposer must be in writing, addressed to Sourcewell's Executive Director, and delivered to the Sourcewell office located at 202 12th Street NE, P.O. Box 219, Staples, MN 56479. All documents that comprise the complete protest package must be received no later than 10 calendar days' following Sourcewell's notice of contract award(s) or non-award and must be time stamped by Sourcewell no later than 4:30 p.m., Central Time. A protest must allege a procedural, technical, or legal defect, with supporting documentation. A protest that merely requests a re-evaluation of a proposal's content will not be entertained

A protest must include the following items:

- The name, address, and telephone number of the protester;
- Identification of the solicitation by RFP number;
- A precise statement of the relevant facts;
- Identification of the alleged procedural, technical, or legal defect;
- Analysis of the basis for the protest;
- Any additional supporting documentation;
- The original signature of the protester or its representative; and
- Protest bond in the amount of $20,000 (except where prohibited by law or treaty).

Protests that do not address these elements will not be reviewed.

D. RIGHTS RESERVED

This RFP does not commit Sourcewell to award any contract, and a proposal may be rejected if it is nonresponsive, conditional, incomplete, conflicting, or misleading. Proposals that contain false statements or do not support an attribute or condition stated by the proposer may be rejected.

Sourcewell reserves the right to:

- Modify or cancel this RFP at any time;
- Reject any and all proposals received;
- Reject proposals that do not comply with the provisions of this RFP;
- Select, for contracts or for discussion, a proposal other than that with the lowest cost;
- Independently verify any information provided in a proposal;
- Disqualify any proposer that does not meet the requirements of this RFP, is debarred or suspended by the United States or Canada, State of Minnesota, Participating Entity's state or province; has an officer, or other key personnel, who have been charged with a serious crime; or is bankrupt, insolvent, or where bankruptcy or insolvency are a reasonable prospect;
- Waive or modify any informalities, irregularities, or inconsistencies in the proposals received;
- Clarify any part of a proposal and discuss any aspect of the proposal with any proposer; and negotiate with more than one proposer;
- Award a contract if only one responsive proposal is received if it is in the best interest of Participating Entities; and
- Award a contract to one or more proposers if it is in the best interest of Participating Entities.

E. DISPOSITION OF PROPOSALS

All materials submitted in response to this RFP will become property of Sourcewell and will become public record in accordance with Minnesota Statutes Section 13.591, after negotiations

are complete. Sourcewell considers that negotiations are complete upon execution of a resulting contract. It is the proposer's responsibility to clearly identify any data submitted that it considers to be protected. Proposer must also include a justification for the classification citing the applicable Minnesota law. Sourcewell may reject proposals that are marked confidential or nonpublic, either substantially or in their entirety.

Sourcewell will not consider the prices submitted by the proposer to be confidential, proprietary, or trade secret materials. Financial information, including financial statements, provided by a proposer is not considered trade secret under the statutory definition.

11/19/2021

Addendum No. 1
Solicitation Number: RFP 120721
Solicitation Name: Underground Infrastructure Inspection and Rehabilitation Equipment with Related Services

Consider the following Question and Answer to be part of the above-titled solicitation documents. The remainder of the documents remain unchanged.

Question 1:

What geographical regions can, and will this contract be used in?

Answer 1:

Sourcewell is seeking solutions to serve the largest possible cross-section of current and potential Sourcewell participating entities. Refer to RFP Section I. B. – Use of Resulting Contracts for details.

End of Addendum

Acknowledgement of this Addendum to RFP 120721 posted to the Sourcewell Procurement Portal on 11/19/2021, is required at the time of proposal submittal.

DocuSign Envelope ID: D4B9CF62-8FB3-479F-8650-080A4193F932

Sourcewell

Solicitation Number: RFP #120721

CONTRACT

This Contract is between Sourcewell, 202 12th Street Northeast, P.O. Box 219, Staples, MN 56479 (Sourcewell) and RapidView LLC, 1828 W. Olson Rd., Rochester, IN 46975 (Supplier).

Sourcewell is a State of Minnesota local government unit and service cooperative created under the laws of the State of Minnesota (Minnesota Statutes Section 123A.21) that offers cooperative procurement solutions to government entities. Participation is open to eligible federal, state/province, and municipal governmental entities, higher education, K-12 education, nonprofit, tribal government, and other public entities located in the United States and Canada. Sourcewell issued a public solicitation for Underground Infrastructure Inspection and Rehabilitation Equipment with Related Services from which Supplier was awarded a contract.

Supplier desires to contract with Sourcewell to provide equipment, products, or services to Sourcewell and the entities that access Sourcewell's cooperative purchasing contracts (Participating Entities).

1. TERM OF CONTRACT

A. EFFECTIVE DATE. This Contract is effective upon the date of the final signature below.

B. EXPIRATION DATE AND EXTENSION. This Contract expires January 17, 2026, unless it is cancelled sooner pursuant to Article 22. This Contract may be extended one additional year upon the request of Sourcewell and written agreement by Supplier.

C. SURVIVAL OF TERMS. Notwithstanding any expiration or termination of this Contract, all payment obligations incurred prior to expiration or termination will survive, as will the following: Articles 11 through 14 survive the expiration or cancellation of this Contract. All other rights will cease upon expiration or termination of this Contract.

2. EQUIPMENT, PRODUCTS, OR SERVICES

A. EQUIPMENT, PRODUCTS, OR SERVICES. Supplier will provide the Equipment, Products, or Services as stated in its Proposal submitted under the Solicitation Number listed above. Supplier's Equipment, Products, or Services Proposal (Proposal) is attached and incorporated into this Contract.

DocuSign Envelope ID: D4B9CF62-8FB3-479F-8650-080A4193F932

All Equipment and Products provided under this Contract must be new and the current model. Supplier may offer close-out or refurbished Equipment or Products if they are clearly indicated in Supplier's product and pricing list. Unless agreed to by the Participating Entities in advance, Equipment or Products must be delivered as operational to the Participating Entity's site.

This Contract offers an indefinite quantity of sales, and while substantial volume is anticipated, sales and sales volume are not guaranteed.

B. WARRANTY. Supplier warrants that all Equipment, Products, and Services furnished are free from liens and encumbrances, and are free from defects in design, materials, and workmanship. In addition, Supplier warrants the Equipment, Products, and Services are suitable for and will perform in accordance with the ordinary use for which they are intended. Supplier's dealers and distributors must agree to assist the Participating Entity in reaching a resolution in any dispute over warranty terms with the manufacturer. Any manufacturer's warranty that extends beyond the expiration of the Supplier's warranty will be passed on to the Participating Entity.

C. DEALERS, DISTRIBUTORS, AND/OR RESELLERS. Upon Contract execution and throughout the Contract term, Supplier must provide to Sourcewell a current means to validate or authenticate Supplier's authorized dealers, distributors, or resellers relative to the Equipment, Products, and Services offered under this Contract, which will be incorporated into this Contract by reference. It is the Supplier's responsibility to ensure Sourcewell receives the most current information.

3. PRICING

All Equipment, Products, or Services under this Contract will be priced at or below the price stated in Supplier's Proposal.

When providing pricing quotes to Participating Entities, all pricing quoted must reflect a Participating Entity's total cost of acquisition. This means that the quoted cost is for delivered Equipment, Products, and Services that are operational for their intended purpose, and includes all costs to the Participating Entity's requested delivery location.

Regardless of the payment method chosen by the Participating Entity, the total cost associated with any purchase option of the Equipment, Products, or Services must always be disclosed in the pricing quote to the applicable Participating Entity at the time of purchase.

A. SHIPPING AND SHIPPING COSTS. All delivered Equipment and Products must be properly packaged. Damaged Equipment and Products may be rejected. If the damage is not readily apparent at the time of delivery, Supplier must permit the Equipment and Products to be returned within a reasonable time at no cost to Sourcewell or its Participating Entities. Participating Entities reserve the right to inspect the Equipment and Products at a reasonable

DocuSign Envelope ID: D4B9CF62-8FB3-479F-8650-080A4193F932

time after delivery where circumstances or conditions prevent effective inspection of the Equipment and Products at the time of delivery. In the event of the delivery of nonconforming Equipment and Products, the Participating Entity will notify the Supplier as soon as possible and the Supplier will replace nonconforming Equipment and Products with conforming Equipment and Products that are acceptable to the Participating Entity.

Supplier must arrange for and pay for the return shipment on Equipment and Products that arrive in a defective or inoperable condition.

Sourcewell may declare the Supplier in breach of this Contract if the Supplier intentionally delivers substandard or inferior Equipment or Products.

B. SALES TAX. Each Participating Entity is responsible for supplying the Supplier with valid tax-exemption certification(s). When ordering, a Participating Entity must indicate if it is a tax-exempt entity.

C. HOT LIST PRICING. At any time during this Contract, Supplier may offer a specific selection of Equipment, Products, or Services at discounts greater than those listed in the Contract. When Supplier determines it will offer Hot List Pricing, it must be submitted electronically to Sourcewell in a line-item format. Equipment, Products, or Services may be added or removed from the Hot List at any time through a Sourcewell Price and Product Change Form as defined in Article 4 below.

Hot List program and pricing may also be used to discount and liquidate close-out and discontinued Equipment and Products as long as those close-out and discontinued items are clearly identified as such. Current ordering process and administrative fees apply. Hot List Pricing must be published and made available to all Participating Entities.

4. PRODUCT AND PRICING CHANGE REQUESTS

Supplier may request Equipment, Product, or Service changes, additions, or deletions at any time. All requests must be made in writing by submitting a signed Sourcewell Price and Product Change Request Form to the assigned Sourcewell Supplier Development Administrator. This approved form is available from the assigned Sourcewell Supplier Development Administrator. At a minimum, the request must:

- Identify the applicable Sourcewell contract number;
- Clearly specify the requested change;
- Provide sufficient detail to justify the requested change;
- Individually list all Equipment, Products, or Services affected by the requested change, along with the requested change (e.g., addition, deletion, price change); and

DocuSign Envelope ID: D4B9CF62-8FB3-479F-8650-080A4193F932

- Include a complete restatement of pricing documentation in Microsoft Excel with the effective date of the modified pricing, or product addition or deletion. The new pricing restatement must include all Equipment, Products, and Services offered, even for those items where pricing remains unchanged.

A fully executed Sourcewell Price and Product Change Request Form will become an amendment to this Contract and will be incorporated by reference.

5. PARTICIPATION, CONTRACT ACCESS, AND PARTICIPATING ENTITY REQUIREMENTS

A. PARTICIPATION. Sourcewell's cooperative contracts are available and open to public and nonprofit entities across the United States and Canada; such as federal, state/province, municipal, K-12 and higher education, tribal government, and other public entities.

The benefits of this Contract should be available to all Participating Entities that can legally access the Equipment, Products, or Services under this Contract. A Participating Entity's authority to access this Contract is determined through its cooperative purchasing, interlocal, or joint powers laws. Any entity accessing benefits of this Contract will be considered a Service Member of Sourcewell during such time of access. Supplier understands that a Participating Entity's use of this Contract is at the Participating Entity's sole convenience and Participating Entities reserve the right to obtain like Equipment, Products, or Services from any other source.

Supplier is responsible for familiarizing its sales and service forces with Sourcewell contract use eligibility requirements and documentation and will encourage potential participating entities to join Sourcewell. Sourcewell reserves the right to add and remove Participating Entities to its roster during the term of this Contract.

B. PUBLIC FACILITIES. Supplier's employees may be required to perform work at government-owned facilities, including schools. Supplier's employees and agents must conduct themselves in a professional manner while on the premises, and in accordance with Participating Entity policies and procedures, and all applicable laws.

6. PARTICIPATING ENTITY USE AND PURCHASING

A. ORDERS AND PAYMENT. To access the contracted Equipment, Products, or Services under this Contract, a Participating Entity must clearly indicate to Supplier that it intends to access this Contract; however, order flow and procedure will be developed jointly between Sourcewell and Supplier. Typically, a Participating Entity will issue an order directly to Supplier or its authorized subsidiary, distributor, dealer, or reseller. If a Participating Entity issues a purchase order, it may use its own forms, but the purchase order should clearly note the applicable Sourcewell contract number. All Participating Entity orders under this Contract must be issued prior to expiration or cancellation of this Contract; however, Supplier performance, Participating Entity

DocuSign Envelope ID: D4B9CF62-8FB3-479F-8650-080A4193F932

payment obligations, and any applicable warranty periods or other Supplier or Participating Entity obligations may extend beyond the term of this Contract.

Supplier's acceptable forms of payment are included in its attached Proposal. Participating Entities will be solely responsible for payment and Sourcewell will have no liability for any unpaid invoice of any Participating Entity.

B. ADDITIONAL TERMS AND CONDITIONS/PARTICIPATING ADDENDUM. Additional terms and conditions to a purchase order, or other required transaction documentation, may be negotiated between a Participating Entity and Supplier, such as job or industry-specific requirements, legal requirements (e.g., affirmative action or immigration status requirements), or specific local policy requirements. Some Participating Entities may require the use of a Participating Addendum; the terms of which will be negotiated directly between the Participating Entity and the Supplier. Any negotiated additional terms and conditions must never be less favorable to the Participating Entity than what is contained in this Contract.

C. SPECIALIZED SERVICE REQUIREMENTS. In the event that the Participating Entity requires service or specialized performance requirements not addressed in this Contract (such as e-commerce specifications, specialized delivery requirements, or other specifications and requirements), the Participating Entity and the Supplier may enter into a separate, standalone agreement, apart from this Contract. Sourcewell, including its agents and employees, will not be made a party to a claim for breach of such agreement.

D. TERMINATION OF ORDERS. Participating Entities may terminate an order, in whole or in part, immediately upon notice to Supplier in the event of any of the following events:

1. The Participating Entity fails to receive funding or appropriation from its governing body at levels sufficient to pay for the equipment, products, or services to be purchased; or
2. Federal, state, or provincial laws or regulations prohibit the purchase or change the Participating Entity's requirements.

E. GOVERNING LAW AND VENUE. The governing law and venue for any action related to a Participating Entity's order will be determined by the Participating Entity making the purchase.

7. CUSTOMER SERVICE

A. PRIMARY ACCOUNT REPRESENTATIVE. Supplier will assign an Account Representative to Sourcewell for this Contract and must provide prompt notice to Sourcewell if that person is changed. The Account Representative will be responsible for:

- Maintenance and management of this Contract;
- Timely response to all Sourcewell and Participating Entity inquiries; and

DocuSign Envelope ID: D4B9CF62-8FB3-479F-8650-080A4193F932

- Business reviews to Sourcewell and Participating Entities, if applicable.

B. BUSINESS REVIEWS. Supplier must perform a minimum of one business review with Sourcewell per contract year. The business review will cover sales to Participating Entities, pricing and contract terms, administrative fees, sales data reports, supply issues, customer issues, and any other necessary information.

8. REPORT ON CONTRACT SALES ACTIVITY AND ADMINISTRATIVE FEE PAYMENT

A. CONTRACT SALES ACTIVITY REPORT. Each calendar quarter, Supplier must provide a contract sales activity report (Report) to the Sourcewell Supplier Development Administrator assigned to this Contract. Reports are due no later than 45 days after the end of each calendar quarter. A Report must be provided regardless of the number or amount of sales during that quarter (i.e., if there are no sales, Supplier must submit a report indicating no sales were made).

The Report must contain the following fields:

- Participating Entity Name (e.g., City of Staples Highway Department);
- Participating Entity Physical Street Address;
- Participating Entity City;
- Participating Entity State/Province;
- Participating Entity Zip/Postal Code;
- Participating Entity Contact Name;
- Participating Entity Contact Email Address;
- Participating Entity Contact Telephone Number;
- Sourcewell Assigned Entity/Participating Entity Number;
- Item Purchased Description;
- Item Purchased Price;
- Sourcewell Administrative Fee Applied; and
- Date Purchase was invoiced/sale was recognized as revenue by Supplier.

B. ADMINISTRATIVE FEE. In consideration for the support and services provided by Sourcewell, the Supplier will pay an administrative fee to Sourcewell on all Equipment, Products, and Services provided to Participating Entities. The Administrative Fee must be included in, and not added to, the pricing. Supplier may not charge Participating Entities more than the contracted price to offset the Administrative Fee.

The Supplier will submit payment to Sourcewell for the percentage of administrative fee stated in the Proposal multiplied by the total sales of all Equipment, Products, and Services purchased by Participating Entities under this Contract during each calendar quarter. Payments should note the Supplier's name and Sourcewell-assigned contract number in the memo; and must be

DocuSign Envelope ID: D4B9CF62-8FB3-479F-8650-080A4193F932

mailed to the address above “Attn: Accounts Receivable” or remitted electronically to Sourcewell’s banking institution per Sourcewell’s Finance department instructions. Payments must be received no later than 45 calendar days after the end of each calendar quarter.

Supplier agrees to cooperate with Sourcewell in auditing transactions under this Contract to ensure that the administrative fee is paid on all items purchased under this Contract.

In the event the Supplier is delinquent in any undisputed administrative fees, Sourcewell reserves the right to cancel this Contract and reject any proposal submitted by the Supplier in any subsequent solicitation. In the event this Contract is cancelled by either party prior to the Contract’s expiration date, the administrative fee payment will be due no more than 30 days from the cancellation date.

9. AUTHORIZED REPRESENTATIVE

Sourcewell's Authorized Representative is its Chief Procurement Officer.

Supplier’s Authorized Representative is the person named in the Supplier’s Proposal. If Supplier’s Authorized Representative changes at any time during this Contract, Supplier must promptly notify Sourcewell in writing.

10. AUDIT, ASSIGNMENT, AMENDMENTS, WAIVER, AND CONTRACT COMPLETE

A. AUDIT. Pursuant to Minnesota Statutes Section 16C.05, subdivision 5, the books, records, documents, and accounting procedures and practices relevant to this Agreement are subject to examination by Sourcewell or the Minnesota State Auditor for a minimum of six years from the end of this Contract. This clause extends to Participating Entities as it relates to business conducted by that Participating Entity under this Contract.

B. ASSIGNMENT. Neither party may assign or otherwise transfer its rights or obligations under this Contract without the prior written consent of the other party and a fully executed assignment agreement. Such consent will not be unreasonably withheld. Any prohibited assignment will be invalid.

C. AMENDMENTS. Any amendment to this Contract must be in writing and will not be effective until it has been duly executed by the parties.

D. WAIVER. Failure by either party to take action or assert any right under this Contract will not be deemed a waiver of such right in the event of the continuation or repetition of the circumstances giving rise to such right. Any such waiver must be in writing and signed by the parties.

DocuSign Envelope ID: D4B9CF62-8FB3-479F-8650-080A4193F932

E. CONTRACT COMPLETE. This Contract represents the complete agreement between the parties. No other understanding regarding this Contract, whether written or oral, may be used to bind either party.For any conflict between the attached Proposal and the terms set out in Articles 1-22 of this Contract, the terms of Articles 1-22 will govern.

F. RELATIONSHIP OF THE PARTIES. The relationship of the parties is one of independent contractors, each free to exercise judgment and discretion with regard to the conduct of their respective businesses. This Contract does not create a partnership, joint venture, or any other relationship such as master-servant, or principal-agent.

11. INDEMNITY AND HOLD HARMLESS

Supplier must indemnify, defend, save, and hold Sourcewell and its Participating Entities, including their agents and employees, harmless from any claims or causes of action, including attorneys' fees incurred by Sourcewell or its Participating Entities, arising out of any act or omission in the performance of this Contract by the Supplier or its agents or employees; this indemnification includes injury or death to person(s) or property alleged to have been caused by some defect in the Equipment, Products, or Services under this Contract to the extent the Equipment, Product, or Service has been used according to its specifications. Sourcewell's responsibility will be governed by the State of Minnesota's Tort Liability Act (Minnesota Statutes Chapter 466) and other applicable law.

12. GOVERNMENT DATA PRACTICES

Supplier and Sourcewell must comply with the Minnesota Government Data Practices Act, Minnesota Statutes Chapter 13, as it applies to all data provided by or provided to Sourcewell under this Contract and as it applies to all data created, collected, received, stored, used, maintained, or disseminated by the Supplier under this Contract.

13. INTELLECTUAL PROPERTY, PUBLICITY, MARKETING, AND ENDORSEMENT

A. INTELLECTUAL PROPERTY

1. *Grant of License.* During the term of this Contract:
   a. Sourcewell grants to Supplier a royalty-free, worldwide, non-exclusive right and license to use thetrademark(s) provided to Supplier by Sourcewell in advertising and promotional materials for the purpose of marketing Sourcewell's relationship with Supplier.
   b. Supplier grants to Sourcewell a royalty-free, worldwide, non-exclusive right and license to use Supplier's trademarks in advertising and promotional materials for the purpose of marketing Supplier's relationship with Sourcewell.
2. *Limited Right of Sublicense*. The right and license granted herein includes a limited right of each party to grant sublicenses to their respective subsidiaries, distributors, dealers, resellers, marketing representatives, and agents (collectively "Permitted Sublicensees") in

DocuSign Envelope ID: D4B9CF62-8FB3-479F-8650-080A4193F932

advertising and promotional materials for the purpose of marketing the Parties' relationship to Participating Entities. Any sublicense granted will be subject to the terms and conditions of this Article. Each party will be responsible for any breach of this Article by any of their respective sublicensees.

3. *Use; Quality Control.*

a. Neither party may alter the other party's trademarks from the form provided and must comply with removal requests as to specific uses of its trademarks or logos.

b. Each party agrees to use, and to cause its Permitted Sublicensees to use, the other party's trademarks only in good faith and in a dignified manner consistent with such party's use of the trademarks. Upon written notice to the breaching party, the breaching party has 30 days of the date of the written notice to cure the breach or the license will be terminated.

4. As applicable, Supplier agrees to indemnify and hold harmless Sourcewell and its Participating Entities against any and all suits, claims, judgments, and costs instituted or recovered against Sourcewell or Participating Entities by any person on account of the use of any Equipment or Products by Sourcewell or its Participating Entities supplied by Supplier in violation of applicable patent or copyright laws.

5. Termination. Upon the termination of this Contract for any reason, each party, including Permitted Sublicensees, will have 30 days to remove all Trademarks from signage, websites, and the like bearing the other party's name or logo (excepting Sourcewell's pre-printed catalog of suppliers which may be used until the next printing). Supplier must return all marketing and promotional materials, including signage, provided by Sourcewell, or dispose of it according to Sourcewell's written directions.

B. PUBLICITY. Any publicity regarding the subject matter of this Contract must not be released without prior written approval from the Authorized Representatives. Publicity includes notices, informational pamphlets, press releases, research, reports, signs, and similar public notices prepared by or for the Supplier individually or jointly with others, or any subcontractors, with respect to the program, publications, or services provided resulting from this Contract.

C. MARKETING. Any direct advertising, marketing, or offers with Participating Entities must be approved by Sourcewell. Send all approval requests to the Sourcewell Supplier Development Administrator assigned to this Contract.

D. ENDORSEMENT. The Supplier must not claim that Sourcewell endorses its Equipment, Products, or Services.

DocuSign Envelope ID: D4B9CF62-8FB3-479F-8650-080A4193F932

14. GOVERNING LAW, JURISDICTION, AND VENUE

The substantive and procedural laws of the State of Minnesota will govern this Contract. Venue for all legal proceedings arising out of this Contract, or its breach, must be in the appropriate state court in Todd County, Minnesota or federal court in Fergus Falls, Minnesota.

15. FORCE MAJEURE

Neither party to this Contract will be held responsible for delay or default caused by acts of God or other conditions that are beyond that party's reasonable control. A party defaulting under this provision must provide the other party prompt written notice of the default.

16. SEVERABILITY

If any provision of this Contract is found by a court of competent jurisdiction to be illegal, unenforceable, or void then both parties will be relieved from all obligations arising from that provision. If the remainder of this Contract is capable of being performed, it will not be affected by such determination or finding and must be fully performed.

17. PERFORMANCE, DEFAULT, AND REMEDIES

A. PERFORMANCE. During the term of this Contract, the parties will monitor performance and address unresolved contract issues as follows:

1. *Notification.* The parties must promptly notify each other of any known dispute and work in good faith to resolve such dispute within a reasonable period of time. If necessary, Sourcewell and the Supplier will jointly develop a short briefing document that describes the issue(s), relevant impact, and positions of both parties.
2. *Escalation.* If parties are unable to resolve the issue in a timely manner, as specified above, either Sourcewell or Supplier may escalate the resolution of the issue to a higher level of management. The Supplier will have 30 calendar days to cure an outstanding issue.
3. *Performance while Dispute is Pending*. Notwithstanding the existence of a dispute, the Supplier must continue without delay to carry out all of its responsibilities under the Contract that are not affected by the dispute. If the Supplier fails to continue without delay to perform its responsibilities under the Contract, in the accomplishment of all undisputed work, the Supplier will bear any additional costs incurred by Sourcewell and/or its Participating Entities as a result of such failure to proceed.

B. DEFAULT AND REMEDIES. Either of the following constitutes cause to declare this Contract, or any Participating Entity order under this Contract, in default:

1. Nonperformance of contractual requirements, or
2. A material breach of any term or condition of this Contract.

DocuSign Envelope ID: D4B9CF62-8FB3-479F-8650-080A4193F932

The party claiming default must provide written notice of the default, with 30 calendar days to cure the default. Time allowed for cure will not diminish or eliminate any liability for liquidated or other damages. If the default remains after the opportunity for cure, the non-defaulting party may:

- Exercise any remedy provided by law or equity, or
- Terminate the Contract or any portion thereof, including any orders issued against the Contract.

18. INSURANCE

A. REQUIREMENTS. At its own expense, Supplier must maintain insurance policy(ies) in effect at all times during the performance of this Contract with insurance company(ies) licensed or authorized to do business in the State of Minnesota having an "AM BEST" rating of A- or better, with coverage and limits of insurance not less than the following:

1. *Workers' Compensation and Employer's Liability.*
Workers' Compensation: As required by any applicable law or regulation.
Employer's Liability Insurance: must be provided in amounts not less than listed below:
Minimum limits:
$500,000 each accident for bodily injury by accident
$500,000 policy limit for bodily injury by disease
$500,000 each employee for bodily injury by disease

2. *Commercial General Liability Insurance.* Supplier will maintain insurance covering its operations, with coverage on an occurrence basis, and must be subject to terms no less broad than the Insurance Services Office ("ISO") Commercial General Liability Form CG0001 (2001 or newer edition), or equivalent. At a minimum, coverage must include liability arising from premises, operations, bodily injury and property damage, independent contractors, products-completed operations including construction defect, contractual liability, blanket contractual liability, and personal injury and advertising injury. All required limits, terms and conditions of coverage must be maintained during the term of this Contract.
Minimum Limits:
$1,000,000 each occurrence Bodily Injury and Property Damage
$1,000,000 Personal and Advertising Injury
$2,000,000 aggregate for Products-Completed operations
$2,000,000 general aggregate

3. *Commercial Automobile Liability Insurance.* During the term of this Contract, Supplier will maintain insurance covering all owned, hired, and non-owned automobiles in limits of liability not less than indicated below. The coverage must be subject to terms

DocuSign Envelope ID: D4B9CF62-8FB3-479F-8650-080A4193F932

no less broad than ISO Business Auto Coverage Form CA 0001 (2010 edition or newer), or equivalent.

Minimum Limits:
$1,000,000 each accident, combined single limit

4. *Umbrella Insurance*. During the term of this Contract, Supplier will maintain umbrella coverage over Employer's Liability, Commercial General Liability, and Commercial Automobile.

Minimum Limits:
$2,000,000

5. *Network Security and Privacy Liability Insurance*. During the term of this Contract, Supplier will maintain coverage for network security and privacy liability. The coverage may be endorsed on another form of liability coverage or written on a standalone policy. The insurance must cover claims which may arise from failure of Supplier's security resulting in, but not limited to, computer attacks, unauthorized access, disclosure of not public data – including but not limited to, confidential or private information, transmission of a computer virus, or denial of service.

Minimum limits:
$2,000,000 per occurrence
$2,000,000 annual aggregate

Failure of Supplier to maintain the required insurance will constitute a material breach entitling Sourcewell to immediately terminate this Contract for default.

B. CERTIFICATES OF INSURANCE. Prior to commencing under this Contract, Supplier must furnish to Sourcewell a certificate of insurance, as evidence of the insurance required under this Contract. Prior to expiration of the policy(ies), renewal certificates must be mailed to Sourcewell, 202 12th Street Northeast, P.O. Box 219, Staples, MN 56479 or sent to the Sourcewell Supplier Development Administrator assigned to this Contract. The certificates must be signed by a person authorized by the insurer(s) to bind coverage on their behalf.

Failure to request certificates of insurance by Sourcewell, or failure of Supplier to provide certificates of insurance, in no way limits or relieves Supplier of its duties and responsibilities in this Contract.

C. ADDITIONAL INSURED ENDORSEMENT AND PRIMARY AND NON-CONTRIBUTORY INSURANCE CLAUSE. Supplier agrees to list Sourcewell and its Participating Entities, including their officers, agents, and employees, as an additional insured under the Supplier's commercial general liability insurance policy with respect to liability arising out of activities, "operations," or "work" performed by or on behalf of Supplier, and products and completed operations of Supplier. The policy provision(s) or endorsement(s) must further provide that coverage is

DocuSign Envelope ID: D4B9CF62-8FB3-479F-8650-080A4193F932

primary and not excess over or contributory with any other valid, applicable, and collectible insurance or self-insurance in force for the additional insureds.

D. WAIVER OF SUBROGATION. Supplier waives and must require (by endorsement or otherwise) all its insurers to waive subrogation rights against Sourcewell and other additional insureds for losses paid under the insurance policies required by this Contract or other insurance applicable to the Supplier or its subcontractors. The waiver must apply to all deductibles and/or self-insured retentions applicable to the required or any other insurance maintained by the Supplier or its subcontractors. Where permitted by law, Supplier must require similar written express waivers of subrogation and insurance clauses from each of its subcontractors.

E. UMBRELLA/EXCESS LIABILITY/SELF-INSURED RETENTION. The limits required by this Contract can be met by either providing a primary policy or in combination with umbrella/excess liability policy(ies), or self-insured retention.

19. COMPLIANCE

A. LAWS AND REGULATIONS. All Equipment, Products, or Services provided under this Contract must comply fully with applicable federal laws and regulations, and with the laws in the states and provinces in which the Equipment, Products, or Services are sold.

B. LICENSES. Supplier must maintain a valid and current status on all required federal, state/provincial, and local licenses, bonds, and permits required for the operation of the business that the Supplier conducts with Sourcewell and Participating Entities.

20. BANKRUPTCY, DEBARMENT, OR SUSPENSION CERTIFICATION

Supplier certifies and warrants that it is not in bankruptcy or that it has previously disclosed in writing certain information to Sourcewell related to bankruptcy actions. If at any time during this Contract Supplier declares bankruptcy, Supplier must immediately notify Sourcewell in writing.

Supplier certifies and warrants that neither it nor its principals are presently debarred, suspended, proposed for debarment, declared ineligible, or voluntarily excluded from programs operated by the State of Minnesota; the United States federal government or the Canadian government, as applicable; or any Participating Entity. Supplier certifies and warrants that neither it nor its principals have been convicted of a criminal offense related to the subject matter of this Contract. Supplier further warrants that it will provide immediate written notice to Sourcewell if this certification changes at any time.

DocuSign Envelope ID: D4B9CF62-8FB3-479F-8650-080A4193F932

21. PROVISIONS FOR NON-UNITED STATES FEDERAL ENTITY PROCUREMENTS UNDER UNITED STATES FEDERAL AWARDS OR OTHER AWARDS

Participating Entities that use United States federal grant or FEMA funds to purchase goods or services from this Contract may be subject to additional requirements including the procurement standards of the Uniform Administrative Requirements, Cost Principles and Audit Requirements for Federal Awards, 2 C.F.R. § 200. Participating Entities may have additional requirements based on specific funding source terms or conditions. Within this Article, all references to "federal" should be interpreted to mean the United States federal government. The following list only applies when a Participating Entity accesses Supplier's Equipment, Products, or Services with United States federal funds.

A. EQUAL EMPLOYMENT OPPORTUNITY. Except as otherwise provided under 41 C.F.R. § 60, all contracts that meet the definition of "federally assisted construction contract" in 41 C.F.R. § 60-1.3 must include the equal opportunity clause provided under 41 C.F.R. §60-1.4(b), in accordance with Executive Order 11246, "Equal Employment Opportunity" (30 FR 12319, 12935, 3 C.F.R. §, 1964-1965 Comp., p. 339), as amended by Executive Order 11375, "Amending Executive Order 11246 Relating to Equal Employment Opportunity," and implementing regulations at 41 C.F.R. § 60, "Office of Federal Contract Compliance Programs, Equal Employment Opportunity, Department of Labor." The equal opportunity clause is incorporated herein by reference.

B. DAVIS-BACON ACT, AS AMENDED (40 U.S.C. § 3141-3148). When required by federal program legislation, all prime construction contracts in excess of $2,000 awarded by non-federal entities must include a provision for compliance with the Davis-Bacon Act (40 U.S.C. § 3141-3144, and 3146-3148) as supplemented by Department of Labor regulations (29 C.F.R. § 5, "Labor Standards Provisions Applicable to Contracts Covering Federally Financed and Assisted Construction"). In accordance with the statute, contractors must be required to pay wages to laborers and mechanics at a rate not less than the prevailing wages specified in a wage determination made by the Secretary of Labor. In addition, contractors must be required to pay wages not less than once a week. The non-federal entity must place a copy of the current prevailing wage determination issued by the Department of Labor in each solicitation. The decision to award a contract or subcontract must be conditioned upon the acceptance of the wage determination. The non-federal entity must report all suspected or reported violations to the federal awarding agency. The contracts must also include a provision for compliance with the Copeland "Anti-Kickback" Act (40 U.S.C. § 3145), as supplemented by Department of Labor regulations (29 C.F.R. § 3, "Contractors and Subcontractors on Public Building or Public Work Financed in Whole or in Part by Loans or Grants from the United States"). The Act provides that each contractor or subrecipient must be prohibited from inducing, by any means, any person employed in the construction, completion, or repair of public work, to give up any part of the compensation to which he or she is otherwise entitled. The non-federal entity must report all suspected or reported violations to the federal awarding agency. Supplier must be in compliance with all applicable Davis-Bacon Act provisions.

DocuSign Envelope ID: D4B9CF62-8FB3-479F-8650-080A4193F932

C. CONTRACT WORK HOURS AND SAFETY STANDARDS ACT (40 U.S.C. § 3701-3708). Where applicable, all contracts awarded by the non-federal entity in excess of $100,000 that involve the employment of mechanics or laborers must include a provision for compliance with 40 U.S.C. §§ 3702 and 3704, as supplemented by Department of Labor regulations (29 C.F.R. § 5). Under 40 U.S.C. § 3702 of the Act, each contractor must be required to compute the wages of every mechanic and laborer on the basis of a standard work week of 40 hours. Work in excess of the standard work week is permissible provided that the worker is compensated at a rate of not less than one and a half times the basic rate of pay for all hours worked in excess of 40 hours in the work week. The requirements of 40 U.S.C. § 3704 are applicable to construction work and provide that no laborer or mechanic must be required to work in surroundings or under working conditions which are unsanitary, hazardous or dangerous. These requirements do not apply to the purchases of supplies or materials or articles ordinarily available on the open market, or contracts for transportation or transmission of intelligence. This provision is hereby incorporated by reference into this Contract. Supplier certifies that during the term of an award for all contracts by Sourcewell resulting from this procurement process, Supplier must comply with applicable requirements as referenced above.

D. RIGHTS TO INVENTIONS MADE UNDER A CONTRACT OR AGREEMENT. If the federal award meets the definition of “funding agreement” under 37 C.F.R. § 401.2(a) and the recipient or subrecipient wishes to enter into a contract with a small business firm or nonprofit organization regarding the substitution of parties, assignment or performance of experimental, developmental, or research work under that “funding agreement,” the recipient or subrecipient must comply with the requirements of 37 C.F.R. § 401, “Rights to Inventions Made by Nonprofit Organizations and Small Business Firms Under Government Grants, Contracts and Cooperative Agreements,” and any implementing regulations issued by the awarding agency. Supplier certifies that during the term of an award for all contracts by Sourcewell resulting from this procurement process, Supplier must comply with applicable requirements as referenced above.

E. CLEAN AIR ACT (42 U.S.C. § 7401-7671Q.) AND THE FEDERAL WATER POLLUTION CONTROL ACT (33 U.S.C. § 1251-1387). Contracts and subgrants of amounts in excess of $150,000 require the non-federal award to agree to comply with all applicable standards, orders or regulations issued pursuant to the Clean Air Act (42 U.S.C. § 7401- 7671q) and the Federal Water Pollution Control Act as amended (33 U.S.C. § 1251- 1387). Violations must be reported to the Federal awarding agency and the Regional Office of the Environmental Protection Agency (EPA). Supplier certifies that during the term of this Contract will comply with applicable requirements as referenced above.

F. DEBARMENT AND SUSPENSION (EXECUTIVE ORDERS 12549 AND 12689). A contract award (see 2 C.F.R. § 180.220) must not be made to parties listed on the government wide exclusions in the System for Award Management (SAM), in accordance with the OMB guidelines at 2 C.F.R. §180 that implement Executive Orders 12549 (3 C.F.R. § 1986 Comp., p. 189) and 12689 (3 C.F.R. § 1989 Comp., p. 235), “Debarment and Suspension.” SAM Exclusions contains the names

DocuSign Envelope ID: D4B9CF62-8FB3-479F-8650-080A4193F932

of parties debarred, suspended, or otherwise excluded by agencies, as well as parties declared ineligible under statutory or regulatory authority other than Executive Order 12549. Supplier certifies that neither it nor its principals are presently debarred, suspended, proposed for debarment, declared ineligible, or voluntarily excluded from participation by any federal department or agency.

G. BYRD ANTI-LOBBYING AMENDMENT, AS AMENDED (31 U.S.C. § 1352). Suppliers must file any required certifications. Suppliers must not have used federal appropriated funds to pay any person or organization for influencing or attempting to influence an officer or employee of any agency, a member of Congress, officer or employee of Congress, or an employee of a member of Congress in connection with obtaining any federal contract, grant, or any other award covered by 31 U.S.C. § 1352. Suppliers must disclose any lobbying with non-federal funds that takes place in connection with obtaining any federal award. Such disclosures are forwarded from tier to tier up to the non-federal award. Suppliers must file all certifications and disclosures required by, and otherwise comply with, the Byrd Anti-Lobbying Amendment (31 U.S.C. § 1352).

H. RECORD RETENTION REQUIREMENTS. To the extent applicable, Supplier must comply with the record retention requirements detailed in 2 C.F.R. § 200.333. The Supplier further certifies that it will retain all records as required by 2 C.F.R. § 200.333 for a period of 3 years after grantees or subgrantees submit final expenditure reports or quarterly or annual financial reports, as applicable, and all other pending matters are closed.

I. ENERGY POLICY AND CONSERVATION ACT COMPLIANCE. To the extent applicable, Supplier must comply with the mandatory standards and policies relating to energy efficiency which are contained in the state energy conservation plan issued in compliance with the Energy Policy and Conservation Act.

J. BUY AMERICAN PROVISIONS COMPLIANCE. To the extent applicable, Supplier must comply with all applicable provisions of the Buy American Act. Purchases made in accordance with the Buy American Act must follow the applicable procurement rules calling for free and open competition.

K. ACCESS TO RECORDS (2 C.F.R. § 200.336). Supplier agrees that duly authorized representatives of a federal agency must have access to any books, documents, papers and records of Supplier that are directly pertinent to Supplier's discharge of its obligations under this Contract for the purpose of making audits, examinations, excerpts, and transcriptions. The right also includes timely and reasonable access to Supplier's personnel for the purpose of interview and discussion relating to such documents.

L. PROCUREMENT OF RECOVERED MATERIALS (2 C.F.R. § 200.322). A non-federal entity that is a state agency or agency of a political subdivision of a state and its contractors must comply with Section 6002 of the Solid Waste Disposal Act, as amended by the Resource Conservation

DocuSign Envelope ID: D4B9CF62-8FB3-479F-8650-080A4193F932

and Recovery Act. The requirements of Section 6002 include procuring only items designated in guidelines of the Environmental Protection Agency (EPA) at 40 C.F.R. § 247 that contain the highest percentage of recovered materials practicable, consistent with maintaining a satisfactory level of competition, where the purchase price of the item exceeds $10,000 or the value of the quantity acquired during the preceding fiscal year exceeded $10,000; procuring solid waste management services in a manner that maximizes energy and resource recovery; and establishing an affirmative procurement program for procurement of recovered materials identified in the EPA guidelines.

M. FEDERAL SEAL(S), LOGOS, AND FLAGS. The Supplier not use the seal(s), logos, crests, or reproductions of flags or likenesses of Federal agency officials without specific pre-approval.

N. NO OBLIGATION BY FEDERAL GOVERNMENT. The U.S. federal government is not a party to this Contract or any purchase by an Participating Entity and is not subject to any obligations or liabilities to the Participating Entity, Supplier, or any other party pertaining to any matter resulting from the Contract or any purchase by an authorized user.

O. PROGRAM FRAUD AND FALSE OR FRAUDULENT STATEMENTS OR RELATED ACTS. The Contractor acknowledges that 31 U.S.C. 38 (Administrative Remedies for False Claims and Statements) applies to the Supplier's actions pertaining to this Contract or any purchase by a Participating Entity.

P. FEDERAL DEBT. The Supplier certifies that it is non-delinquent in its repayment of any federal debt. Examples of relevant debt include delinquent payroll and other taxes, audit disallowance, and benefit overpayments.

Q. CONFLICTS OF INTEREST. The Supplier must notify the U.S. Office of General Services, Sourcewell, and Participating Entity as soon as possible if this Contract or any aspect related to the anticipated work under this Contract raises an actual or potential conflict of interest (as described in 2 C.F.R. Part 200). The Supplier must explain the actual or potential conflict in writing in sufficient detail so that the U.S. Office of General Services, Sourcewell, and Participating Entity are able to assess the actual or potential conflict; and provide any additional information as necessary or requested.

R. U.S. EXECUTIVE ORDER 13224. The Supplier, and its subcontractors, must comply with U.S. Executive Order 13224 and U.S. Laws that prohibit transactions with and provision of resources and support to individuals and organizations associated with terrorism.

S. PROHIBITION ON CERTAIN TELECOMMUNICATIONS AND VIDEO SURVEILLANCE SERVICES OR EQUIPMENT. To the extent applicable, Supplier certifies that during the term of this Contract it will comply with applicable requirements of 2 C.F.R. § 200.216.

DocuSign Envelope ID: D4B9CF62-8FB3-479F-8650-080A4193F932

T. DOMESTIC PREFERENCES FOR PROCUREMENTS. To the extent applicable, Supplier certifies that during the term of this Contract will comply with applicable requirements of 2 C.F.R. § 200.322.

22. CANCELLATION

Sourcewell or Supplier may cancel this Contract at any time, with or without cause, upon 60 days' written notice to the other party. However, Sourcewell may cancel this Contract immediately upon discovery of a material defect in any certification made in Supplier's Proposal. Cancellation of this Contract does not relieve either party of financial, product, or service obligations incurred or accrued prior to cancellation.

Sourcewell	RapidView LLC
DocuSigned by: Jeremy Schwartz C0FD2A139D06489...	DocuSigned by: Steve Keranko 57D33CE92ECD463...
By: _____	By: _____
Jeremy Schwartz	Steve Keranko
Title: Chief Procurement Officer	Title: Director of Sales
Date: 1/13/2022 | 12:22 PM CST	Date: 1/13/2022 | 10:41 AM CST

Approved:

DocuSigned by: Chad Coauette 7E42B8F817A64CC...

By: _____

Chad Coauette

Title: Executive Director/CEO

Date: 1/13/2022 | 12:23 PM CST

RFP 120721 - Underground Infrastructure Inspection and Rehabilitation Equipment with Related Services

Vendor Details

Company Name:	RapidView LLC
Address:	1828 W Olson Rd Rochester, Indiana 46975
Contact:	Steve Keranko
Email:	skeranko@rapidview.com
Phone:	574-224-5450
Fax:	574-223-7953
HST#:	20-5783630

Submission Details

Created On:	Thursday October 21, 2021 13:06:26
Submitted On:	Monday December 06, 2021 14:52:04
Submitted By:	Steve Keranko
Email:	skeranko@rapidview.com
Transaction #:	4b1a8d7e-246b-40bc-a310-1013b36a6467
Submitter's IP Address:	199.16.222.127

Specifications

Table 1: Proposer Identity & Authorized Representatives

General Instructions (applies to all Tables) Sourcewell prefers a brief but thorough response to each question. Do not merely attach additional documents to your response without also providing a substantive response. Do not leave answers blank; respond “N/A” if the question does not apply to you (preferably with an explanation).

Line Item	Question	Response *	
1	Proposer Legal Name (one legal entity only): (In the event of award, will execute the resulting contract as "Supplier")	RapidView LLC	*
2	Identify all subsidiary entities of the Proposer whose equipment, products, or services are included in the Proposal.	RapidView LLC is the only entity.	*
3	Identify all applicable assumed names or DBA names of the Proposer or Proposer's subsidiaries in Line 1 or Line 2 above.	RapidView LLC is the only entity.	*
4	Proposer Physical Address:	RapidView LLC 1828 W. Olson Rd. Rochester, IN 46975	*
5	Proposer website address (or addresses):	www.rapidview.com	*
6	Proposer's Authorized Representative (name, title, address, email address & phone) (The representative must have authority to sign the “Proposer’s Assurance of Compliance” on behalf of the Proposer and, in the event of award, will be expected to execute the resulting contract):	Steve Keranko Director of Sales 1828 Olson Rd Rochester, IN 46975 skeranko@rapidview.com 574-224-5450	*
7	Proposer's primary contact for this proposal (name, title, address, email address & phone):	Steve Keranko Director of Sales 1828 Olson Rd Rochester, IN 46975 skeranko@rapidview.com 574-224-5450	*
8	Proposer's other contacts for this proposal, if any (name, title, address, email address & phone):	Matt Sutton VP of Sales and Marketing 1828 Olson Rd Rochester, IN 46975 msutton@rapidview.com 574-224-5427 Rex Robison CEO 1828 Olson Rd Rochester, IN 46975 rrobison@rapidview.com 574-224-5453	

Table 2: Company Information and Financial Strength

Line Item	Question	Response *	

9	Provide a brief history of your company, including your company's core values, business philosophy, and industry longevity related to the requested equipment, products or services.	Mission Statement Our mission is to provide our customers with increased profits by providing the best products and service in the pipeline inspection industry. Company History RapidView, LLC created business partnerships with several manufacturers of high quality sewer pipeline maintenance products, including our primary product line from IBAK Helmut Hunger GmbH & Co. KG of Kiel Germany, a manufacturer of high quality CCTV pipeline inspection systems since 1957. RapidView LLC imports, distributes and services the complete IBAK camera inspection product line, within North America, from our Rochester, Indiana facility. Originally founded in 1991, as R&R Visual, our company began developing and providing unique inspection solutions to the nuclear, petrochemical, industrial and municipal sewer industries. The development side of the business, RapidView, has designed and marketed the first practical sonar inspection system or sonar profiling for use in liquid filled pipelines. The success of the company was not only based on the construction and sale of sonar units, but by practical applications in the field to provide previously unattainable pipeline assessment data. We have strived to be a single source for subsurface inspection equipment, utilizing the latest in technology coupled with a full staff of trained professionals. The IBAK product line is a perfect fit with our company's philosophy and our customer's diverse needs. This was a logical expansion for our business. The sonar inspection business and specialized long-distance CCTV pipeline inspections created many satisfied customers throughout North America. Our customers like our products, our services, and trust our staff. The addition of the IBAK product line continues our devotion to our customers.	*
10	What are your company's expectations in the event of an award?	RapidView LLC (#122017-RVL) became a Sourcewell approved vendor in February 2014. We have experienced increased growth and acceptance of the contract in each of the 7+ years we have been a member. If awarded another four-year contract, RapidView anticipates a continued increase in acceptance of the contract and sales volume, which in turn will benefit the customer by providing them with State-of-the-Art Technology without the strains of traditional bidding processes. Continued increased efficiencies will be recognized by us, the seller, and participating Sourcewell members delivering considerable time and costs savings.	*
11	Demonstrate your financial strength and stability with meaningful data. This could include such items as financial statements, SEC filings, credit and bond ratings, letters of credit, and detailed reference letters. Upload supporting documents (as applicable) in the document upload section of your response.	RapidView continues to show strong financial strength every year since inception more than 15 years ago. RapidView has consistently remained profitable, solvent, and financially stable. This is evidenced by strong profit margins, excellent return on assets, and solid liquidity position. RapidView continues to have strong sales year after year. In the 7 plus years RapidView has been a part of the Sourcewell family, our sales have quadrupled. We have continued to grow operations while maintaining a very low debt to equity ratio. In 2020, we completed a 10,000 square foot building renovation and expansion project and also added staff in conjunction with that development. This was completed without incurring any long-term debt during a pandemic. To demonstrate our financial growth since the first Sourcewell award in 2014, two financial statements have been combined into one PDF and were uploaded in the supporting documents section - 2020 Financial Statement and 2012 Financial Statement.	*
12	What is your US market share for the solutions that you are proposing?	RapidView's US market share is 35%.	*
13	What is your Canadian market share for the solutions that you are proposing?	RapidView's Canadian market share is 30%.	*
14	Has your business ever petitioned for bankruptcy protection? If so, explain in detail.	No, RapidView LLC has never petitioned for bankruptcy protection.	*

15	How is your organization best described: is it a manufacturer, a distributor/dealer/reseller, or a service provider? Answer whichever question (either a) or b) just below) best applies to your organization. a) If your company is best described as a distributor/dealer/reseller (or similar entity), provide your written authorization to act as a distributor/dealer/reseller for the manufacturer of the products proposed in this RFP. If applicable, is your dealer network independent or company owned? b) If your company is best described as a manufacturer or service provider, describe your relationship with your sales and service force and with your dealer network in delivering the products and services proposed in this RFP. Are these individuals your employees, or the employees of a third party?	(A). RapidView LLC is the North American distributor of IBAK pipeline inspection and rehabilitation equipment. Our dealer network are independent business owners. A sole source letter has been uploaded in the Additional documents section and labeled - RapidView Sole Source letter.	*
16	If applicable, provide a detailed explanation outlining the licenses and certifications that are both required to be held, and actually held, by your organization (including third parties and subcontractors that you use) in pursuit of the business contemplated by this RFP.	RapidView LLC holds a business license and an auto dealership license in the State of Indiana.	*
17	Provide all “Suspension or Debarment” information that has applied to your organization during the past ten years.	RapidView has not had any suspensions or debarment in our company’s history.	*

Table 3: Industry Recognition & Marketplace Success

Line Item	Question	Response *	
18	Describe any relevant industry awards or recognition that your company has received in the past five years	American Infrastructure’s Brand Survey Winner for five consecutive years. 2017-2021	*
19	What percentage of your sales are to the governmental sector in the past three years	Fifty percent of RapidView's business is in the government market. The other fifty percent is in the contractor market.	*
20	What percentage of your sales are to the education sector in the past three years	RapidView currently does not have any Sourcewell sales in the education sector.	*
21	List any state, provincial, or cooperative purchasing contracts that you hold. What is the annual sales volume for each of these contracts over the past three years?	Sourcewell - $16,100,000 (01/01/2018 – 12/31/2020) Ohio State Contract - $4,000,000 HGAC - $2,300,000 PA - $1,400,000 GSA - $0 OK - $0 MN - $0	*
22	List any GSA contracts or Standing Offers and Supply Arrangements (SOSA) that you hold. What is the annual sales volume for each of these contracts over the past three years?	GSA Contract GS-30F-1012H - $0	*

Table 4: References/Testimonials

Line Item 23. Supply reference information from three customers who are eligible to be Sourcewell participating entities.

Entity Name *	Contact Name *	Phone Number *	
Sandy Suburban Improvement District	Jerry L. Knight, General Manager	(801) 561-7662	*
City of Madison	Jay Schlimgen, Public Works General Manager	(608) 266-4819	*
City of Ft. Wayne	Karen Morris, Programs Manager Operations and Maintenance	(260) 427-5169	*

Table 5: Top Five Government or Education Customers

Line Item 24. Provide a list of your top five government, education, or non-profit customers (entity name is optional), including entity type, the state or province the entity is located in, scope of the project(s), size of transaction(s), and dollar volumes from the past three years.

Entity Name	Entity Type *	State / Province *	Scope of Work *	Size of Transactions *	Dollar Volume Past Three Years *	
Colorado Springs Utilities	Government	Colorado - CO	The city is proactively inspecting the sanitary / storm sewer pipelines to determine the detailed condition and to collect data of every notable feature, defect, or other important information.	$525,000 per inspection vehicle	$ 2,100,000	*
City of Oakland	Government	California - CA	The city is proactively inspecting the sanitary / storm sewer pipelines to determine the detailed condition and to collect data of every notable feature, defect, or other important information.	$466,666 per inspection vehicle	$ 1,400,000	*
The Metropolitan Sewer District of Greater Cincinnati	Government	Ohio - OH	The city is proactively inspecting the sanitary / storm sewer pipelines to determine the detailed condition and to collect data of every notable feature, defect, or other important information.	$450,000 per inspection vehicle	$ 900,000	*
City of Corpus Christi	Government	Texas - TX	The city is proactively inspecting the sanitary / storm sewer pipelines to determine the detailed condition and to collect data of every notable feature, defect, or other important information.	$291,666 per inspection vehicle	$ 875,000	*
Baltimore County Department of Public Works Bureau of Utilities	Government	Maryland - MD	The city is proactively inspecting the sanitary / storm sewer pipelines to determine the detailed condition and to collect data of every notable feature, defect, or other important information.	$770,000 per inspection vehicle	$ 770,000	*

Table 6: Ability to Sell and Deliver Service

Describe your company's capability to meet the needs of Sourcewell participating entities across the US and Canada, as applicable. Your response should address in detail at least the following areas: locations of your network of sales and service providers, the number of workers (full-time equivalents) involved in each sector, whether these workers are your direct employees (or employees of a third party), and any overlap between the sales and service functions.

Line Item	Question	Response *	
25	Sales force.	RapidView's primary product line is IBAK pipeline inspection equipment. We are responsible for covering all of North America (US, Canada and Caribbean Islands). Between our manufacturing plant in Kiel, Germany and our North American location in Rochester, Indiana, we have over 300 employees. In North America, we employ over 50 people, and our sales force is 100% focused on the sales and service of this equipment. Our sales force is comprised of five Regional Sales Managers (Northeast, North Central, South, Midwest and West), Director of Sales and a VP of Sales and Marketing. Our independent dealer network covers all 50 states and providences with 15 dealers (60+ sales people) throughout the US and Canada.	*

26	Dealer network or other distribution methods.	Our independent dealer network covers all 50 states and providences with 15 dealers (60+ sales people) throughout the US and Canada. Many of our dealers are located in multiple states. Here is a list of our dealers and the territories that they cover. US Dealers Jet-Vac Sewer Equipment Company (Georgia, North Carolina, South Carolina, & Tennessee) Jack Doheny Companies. (Michigan, Indiana, Kentucky, Ohio, Florida, California, New Jersey & S. New York) Essential Equipment (Texas and Oklahoma) Maryland Industrial Trucks, Inc. (Maryland, Virginia, and Delaware) Gutherie Sales and Service (New York) C.N. Wood Co., Inc. (New Hampshire, Mass., Vermont, Maine, Rhode Island, and Conn.) Vacuum Truck Sales and Service (Louisiana, Arkansas, Mississippi, and Alabama) Midwest Vac Products (Southern Illinois, Missouri, Kansas) Titan Machinery (Minnesota, North Dakota, South Dakota and Montana) Dawson Infrastructure (Colorado, Utah and Wyoming) SWS Equipment (Washington) U.S. Municipal (Pennsylvania) Canadian Dealers Jack Doheny Company (Ontario) Donison NDT (Alberta, Manitoba and Saskatchewan) Rollins Machinery LTD (British Columbia)
27	Service force.	Customer service and satisfaction is our #1 priority. RapidView has a master repair center with 8 full time technicians located in Rochester, IN that service all of the US, Canada and Caribbean Islands. We have 15 certified dealer repair centers located throughout US and Canada. We offer an 800 number to reach our main office and individual dedicated phone lines and email addresses for Service, Parts, Shipping/Receiving, Sales and Marketing. RapidView prides itself on answering the phone with a live person and not an answering service. All contact information is readily available on our website. We provide a fully functional website with information on new equipment, software support, training, special promotions, and networking opportunities. Here is the list of the RapidView Certified Service Centers. Alberta | Donison NDT California | Jack Doheny Company Colorado | Dawson Infrastructure Solutions Florida | Jack Doheny Company Georgia | Jet-Vac Equipment Company Illinois | Midwest Vac Products Michigan | Jack Doheny Company Mississippi | Vacuum Truck Sales and Service Nevada | Jack Doheny Company Ohio | Jack Doheny Company Oklahoma | Essential Equipment South Carolina | Jet-Vac Equipment Company Texas | Essential Equipment Utah | Dawson Infrastructure Solutions Washington | SWS Equipment, Inc.
28	Describe the ordering process. If orders will be handled by distributors, dealers or others, explain the respective roles of the Proposer and others.	RapidView makes the Sourcewell ordering process simple. Whether ordering through our dealer network or with RapidView directly, the process is virtually the same. Here is an outline of how the process works. Order Process (Dealer or Direct) - New Sourcewell Customer generates PO for equipment. - If a dealer is involved, dealer will accept the PO from the customer and generate a PO to RapidView. - If this is a direct sale, the customer will generate a PO to RapidView. - Once equipment is delivered, an invoice will be generated to customer. - Once payment is received, RapidView will pay the Sourcewell agreed fee.

29	Describe in detail the process and procedure of your customer service program, if applicable. Include your response-time capabilities and commitments, as well as any incentives that help your providers meet your stated service goals or promises.	RapidView and its dealers are committed to providing customers with the best equipment and service in the industry. We understand that time lost due to repairs or poor training are detrimental to a customer's productivity and bottom line. We offer a variety of completely free training programs for our customers throughout the year, because we know however well-built, all equipment can break down. RapidView provides the training, tools and support to conduct many repairs yourself. When faced with a more complicated repair, you can be assured that our Service Techs will repair equipment quickly and have it back to the customer as soon as possible. Here is list of how RapidView and its dealer network strive to keep equipment in the field being productive and helping customers reach their goals. - RapidView has a master repair center with 8 full time technicians located in Rochester, IN that service all of the US, Canada and Caribbean Islands. We have 15 certified dealer repair centers located throughout US and Canada. - We offer an 800 number to reach our main office and individual dedicated phone lines and email addresses for Service, Parts, Shipping/Receiving, Sales and Marketing. RapidView prides itself on answering the phone with a live person and not an answering service. - All contact information is readily available on our website. We provide a fully functional website with information on new equipment, software support, training, special promotions, and networking opportunities. - The service team utilizes a case management system within the CRM. When a piece of equipment arrives at the service center, the customer, through email communication, can track the repair all the way through the process. - Concierge service program – when a customer arrives for an on-site equipment repair appointment, they have access to the company lounge, loaner vehicle, walking trails, etc… This helps pass the time while their equipment is being repaired. - $8,000,000 in spare parts and quick same day shipping if ordered before 2:00pm. Having all these parts in inventory, allows RapidView and its dealer network to repair any piece of equipment without having to wait on parts to be manufactured and shipped. RapidView Service team can typically turn around repairs in one day. If you ship your equipment to us via UPS, we receive the product by 10:00 AM and can ship it back via UPS at 5:00 PM. - Free Standardized training programs – RapidView offers group or one-on-one training classes with our repair technicians and it's free of charge - Other training options - Every other year RapidView hosts a free 2-day customer appreciation training event at our Rochester, Indiana facility called SeptemberFest. We have dozens of technical sessions that provide hands-on training for nearly any repair. RapidView also hosts training events throughout North America at dealer locations.	*
30	Describe your ability and willingness to provide your products and services to Sourcewell participating entities in the United States.	RapidView is responsible for covering all of North America (US, Canada and Caribbean Islands). The Sourcewell customers are a perfect fit for our product offering and territory responsibility. RapidView has been part of the Sourcewell family since 2014. During that time, our total Sourcewell sales have been over $30 million to about 150 Sourcewell members. We welcome the opportunity to continue to promote the Sourcewell contract in the United States.	*
31	Describe your ability and willingness to provide your products and services to Sourcewell participating entities in Canada.	RapidView is responsible for covering all of North America (US, Canada and Caribbean Islands). The Sourcewell customers are a perfect fit for our product offering and territory responsibility. We welcome the opportunity to continue to promote the Sourcewell contract in Canada.	*
32	Identify any geographic areas of the United States or Canada that you will NOT be fully serving through the proposed contract.	RapidView will be able to sell and service (including all Sourcewell sectors) pipeline inspection equipment throughout all of the US and Canada without any restrictions.	*
33	Identify any Sourcewell participating entity sectors (i.e., government, education, not-for-profit) that you will NOT be fully serving through the proposed contract. Explain in detail. For example, does your company have only a regional presence, or do other cooperative purchasing contracts limit your ability to promote another contract?	RapidView will be able to sell and service pipeline inspection equipment for all Sourcewell participating entity sectors (i.e., government, education, not-for-profit) throughout all of the US and Canada without any restrictions.	*
34	Define any specific contract requirements or restrictions that would apply to our participating entities in Hawaii and Alaska and in US Territories.	No specific requirements apply to Hawaii, Alaska and the US Islands.	*

Table 7: Marketing Plan

Line Item	Question	Response *	
35	Describe your marketing strategy for promoting this contract opportunity. Upload representative samples of your marketing materials (if applicable) in the document upload section of your response.	Even though we have been an approved Sourcewell vendor for the past seven plus years, we would market the Sourcewell award as if this was the first time being awarded the contract. After the Sourcewell contract gets awarded, we will schedule a conference call with our dealer network to review how the contract works and the process for submitting equipment orders. We will also send an email blast to all of our customers and prospects announcing that we are an authorized vendor listed on the Sourcewell contract. Our newsletter email campaign consists of about 6000 individuals. We will continue to list Sourcewell on our website and ongoing promotion in magazine ads and on Facebook, Twitter and LinkedIn. Each year we have either a dealer meeting or customer/prospect meeting. During these meetings, we would have a segment dedicated to Sourcewell. RapidView also promotes Sourcewell at all national trade shows or RapidView sponsored events - WWETT, No-Dig, WEFTEC, Tri-State, SeptemberFest, etc... There are examples of RapidView promoting Sourcewell in the document upload section.	*
36	Describe your use of technology and digital data (e.g., social media, metadata usage) to enhance marketing effectiveness.	You can visit our website at www.rapidview.com. We market using Facebook, Twitter and LinkedIn. We also market through Netsuites CRM, Paid Search and Digital display ads. Our monthly newsletter campaign also mentions the Sourcewell contract and is distributed to over 6000 individuals. Our dealer network also markets the Sourcewell contract using the same methods.	*
37	In your view, what is Sourcewell's role in promoting contracts arising out of this RFP? How will you integrate a Sourcewell-awarded contract into your sales process?	Over the past eight years, Sourcewell has supported RapidView in many different ways. Here are a few examples. • Educating our sales staff and dealer network • Participating in prospect sales presentations • Presenting at RapidView customer events RapidView looks for this support to continue in the next contract term. Sourcewell is our #1 cooperative purchasing contract and will be for the next four years. Sourcewell is discussed in every potential customer meeting, and this will continue over the next four years.	*
38	Are your products or services available through an e-procurement ordering process? If so, describe your e-procurement system and how governmental and educational customers have used it.	No, our products and services are not available through an e-procurement ordering process.	*

Table 8: Value-Added Attributes

Line Item	Question	Response *	
39	Describe any product, equipment, maintenance, or operator training programs that you offer to Sourcewell participating entities. Include details, such as whether training is standard or optional, who provides training, and any costs that apply.	RapidView provides many opportunities for equipment/operator and maintenance/repair training. • Equipment and/or maintenance training at the Rochester, IN facility. (free of charge) • On-site equipment and/or maintenance training (additional fee) • Product specific technical sessions that provide hands-on training (free of charge) • Every other year RapidView hosts a free 2-day customer appreciation party / training event at our Rochester, Indiana facility called SeptemberFest. (free of charge) • RapidView also hosts training events throughout North America at dealer locations. (most are free of charge) • One-on-one training with our repair technicians at our facility in Rochester, IN. (free of charge) • RapidView has created tech tip video tutorials that cover most of the do-it-yourself repairs. (free of charge)	*

40	Describe any technological advances that your proposed products or services offer.	RapidView IBAK North America is known as the company of “firsts”. • First Sewer Camera • First Pan & Tilt Camera • First Report Writing Software • First Lateral Launch Robot • First Always Upright Pan & Tilt • First Pan & Tilt for 4" • First Pan & Tilt Push Camera • First 360 Panoramo Optical Scanner • First 4K/HD CCTV Camera. Perhaps the greatest innovation in pipeline inspection technology in decades, the PANORAMO® system is providing better data to engineers, reducing stress for operators, increasing productivity and changing the way we inspect our underground infrastructure. The revolutionary PANORAMO® technology is available for manhole inspections! PANORAMO®SI provides a complete 360º view of the manhole after the inspection, similar to normal PANORAMO® pipe segment files. Conduct inspections in a fraction of the time it would take you with traditional methods! Available as an add-on to your PANORAMO® system or in a stand-alone version. RapidView is the only company to offer this technology.	*
41	Describe any “green” initiatives that relate to your company or to your products or services, and include a list of the certifying agency for each.	The independent certification body TÜV NORD CERT has tested IBAK's management system with respect to the requirements of the standards ISO 9001:2015 (quality) and ISO 14001:2015 (environment). IBAK passed the certification audits and has been recertified to both standards. At the same time, the company processes were evaluated for the first time for compliance to the requirements of ISO standard 50001 (energy) and a certificate was awarded. Quality The aim of the standard ISO 9001 is to achieve sustained quality assurance and a continual process of improvement. For IBAK, these two points form the basis for being able to supply customers with sewer inspection and rehabilitation systems of the best possible quality for operation all over the world. The Environment The superordinate objective of the ISO 14001 standard is to promote environmental protection and to reduce damage to the environment. The ISO 14001 certificate is evidence that IBAK is actively striving to reduce the effects on the environment of the company processes, products and services. IBAK's aim is to ensure that all the company's processes and decisions are in line with a responsible treatment of the environment. Energy In a systematic energy management system to ISO 50001, the energy flows of all sites, facilities, processes and activities within the company are documented and their energy efficiency is assessed. IBAK has implemented an ISO 50001 certified energy management system and is striving to promote this further in a continual energy optimization process.	*
42	Identify any third-party issued eco-labels, ratings or certifications that your company has received for the equipment or products included in your Proposal related to energy efficiency or conservation, life-cycle design (cradle-to-cradle), or other green/sustainability factors.	This answer is the same as question #41. The independent certification body TÜV NORD CERT has tested IBAK's management system with respect to the requirements of the standards ISO 9001:2015 (quality) and ISO 14001:2015 (environment). IBAK passed the certification audits and has been recertified to both standards. At the same time, the company processes were evaluated for the first time for compliance to the requirements of ISO standard 50001 (energy) and a certificate was awarded. Quality The aim of the standard ISO 9001 is to achieve sustained quality assurance and a continual process of improvement. For IBAK, these two points form the basis for being able to supply customers with sewer inspection and rehabilitation systems of the best possible quality for operation all over the world. The Environment The superordinate objective of the ISO 14001 standard is to promote environmental protection and to reduce damage to the environment. The ISO 14001 certificate is evidence that IBAK is actively striving to reduce the effects on the environment of the company processes, products and services. IBAK's aim is to ensure that all the company's processes and decisions are in line with a responsible treatment of the environment. Energy In a systematic energy management system to ISO 50001, the energy flows of all sites, facilities, processes and activities within the company are documented and their energy efficiency is assessed. IBAK has implemented an ISO 50001 certified energy management system and is striving to promote this further in a continual energy optimization process.	*

43	Describe any Women or Minority Business Entity (WMBE), Small Business Entity (SBE), or veteran owned business certifications that your company or hub partners have obtained. Upload documentation of certification (as applicable) in the document upload section of your response.	RapidView does not hold any of these certifications.	*
44	What unique attributes does your company, your products, or your services offer to Sourcewell participating entities? What makes your proposed solutions unique in your industry as it applies to Sourcewell participating entities?	IBAK designs and manufactures the components that go into our systems. We do not rely on off-the-shelf consumer products that may be discontinued next month. We manufacture over 85% of our product components so we can guarantee quality, reliability and availability of spare parts for 10 years down the road. Another characteristic that sets us apart from our competition is our experience. Our senior management team has been in the business for over 30 years. Our sales team has been in the business for an average of 8 years. Our customer service and repair technicians have been with the company for an average of 10 years. With all of this experience, there are not a situation that our customers encounter that we cannot help them with. IBAK has been designing and building pipeline inspection robotics since we started the industry in 1957. It is simply the best equipment available. Also, with over 20% of the company dedicated to research and development and a proven track record of industry defining products, customers can be sure they have a partner for the long haul.	*

Table 9: Warranty

Describe in detail your manufacturer warranty program, including conditions and requirements to qualify, claims procedure, and overall structure. You may upload representative samples of your warranty materials (if applicable) in the document upload section of your response in addition to responding to the questions below.

Line Item	Question	Response *	
45	Do your warranties cover all products, parts, and labor?	Yes, RapidView's warranties cover all products, parts and labor.	*
46	Do your warranties impose usage restrictions or other limitations that adversely affect coverage?	No, RapidView does not impose any usage restrictions or other limitations that adversely affect coverage.	*
47	Do your warranties cover the expense of technicians' travel time and mileage to perform warranty repairs?	No, RapidView's warranties does not cover the expense of the technicians' travel time and mileage.	*
48	Are there any geographic regions of the United States or Canada (as applicable) for which you cannot provide a certified technician to perform warranty repairs? How will Sourcewell participating entities in these regions be provided service for warranty repair?	No – our warranty covers all of the US, Canada and the Caribbean Islands. RapidView provides warranty to all areas that RapidView represents.	*
49	Will you cover warranty service for items made by other manufacturers that are part of your proposal, or are these warranties issues typically passed on to the original equipment manufacturer?	RapidView will cover only RapidView IBAK equipment. For products other than IBAK equipment, we utilize the warranties from the original equipment manufacturer.	*
50	What are your proposed exchange and return programs and policies?	RapidView will employ reasonably commercial efforts to fill customers/dealers orders promptly on acceptance by RapidView, but reserves the right to allot available inventories among distributors and end user customers at its discretion. Except for RapidView's Products that are found to have a manufacturer's defect at the time of sale to Distributor, RapidView shall not be obligated to accept any of RapidView's Products that are returned by customer/Distributor. In the event such returns are accepted by RapidView, it may impose a 15% restocking fee.	*
51	Describe any service contract options for the items included in your proposal.	RapidView's standard warranty coverage is for one year. Extended warranty coverage is available for an additional cost for up to two additional years.	*

Table 10: Payment Terms and Financing Options

Line Item	Question	Response *	
52	Describe your payment terms and accepted payment methods.	RapidView's payment terms are 30-day terms. The accepted payment methods are Visa, Mastercard, Discover, ACH/Wire transfers and company checks.	*
53	Describe any leasing or financing options available for use by educational or governmental entities.	RapidView and its dealer network provide municipal leasing options.	*
54	Describe any standard transaction documents that you propose to use in connection with an awarded contract (order forms, terms and conditions, service level agreements, etc.). Upload a sample of each (as applicable) in the document upload section of your response.	RapidView accepts the Customer's standard purchase order documents when placing an order. We have also created a purchase order template that customers can use to easily purchase our pipeline inspection equipment. The template has been uploaded in the document upload section.	*
55	Do you accept the P-card procurement and payment process? If so, is there any additional cost to Sourcewell participating entities for using this process?	RapidView does not accept the P-card procurement and payment process.	*

Table 11: Pricing and Delivery

Provide detailed pricing information in the questions that follow below. Keep in mind that reasonable price and product adjustments can be made during the term of an awarded Contract as described in the RFP, the template Contract, and the Sourcewell Price and Product Change Request Form.

Line Item	Question	Response *	
56	Describe your pricing model (e.g., line-item discounts or product-category discounts). Provide detailed pricing data (including standard or list pricing and the Sourcewell discounted price) on all of the items that you want Sourcewell to consider as part of your RFP response. If applicable, provide a SKU for each item in your proposal. Upload your pricing materials (if applicable) in the document upload section of your response.	Rapidview institutes line-item pricing. To make the pricing easier to understand for the end customer, we created equipment packages. The price guide is set up to display the retail price of the items, the Sourcewell item discount and finally, the Sourcewell discounted price. Our complete price list has been uploaded in the Pricing Document Section.	*
57	Quantify the pricing discount represented by the pricing proposal in this response. For example, if the pricing in your response represents a percentage discount from MSRP or list, state the percentage or percentage range.	RapidView is offering customers who utilize the Sourcewell contract a 4% discount off 2022 pricing.	*
58	Describe any quantity or volume discounts or rebate programs that you offer.	RapidView does not offer quantity or volume discounts.	*
59	Propose a method of facilitating “sourced” products or related services, which may be referred to as “open market” items or “nonstandard options”. For example, you may supply such items “at cost” or “at cost plus a percentage,” or you may supply a quote for each such request.	Our sales are consultative and require RapidView personnel to custom design and build inspection systems for each customer. Any items not listed on our price list provided to Sourcewell will be quoted separately.	*
60	Identify any element of the total cost of acquisition that is NOT included in the pricing submitted with your response. This includes all additional charges associated with a purchase that are not directly identified as freight or shipping charges. For example, list costs for items like pre-delivery inspection, installation, set up, mandatory training, or initial inspection. Identify any parties that impose such costs and their relationship to the Proposer.	RapidView does not have any additional charges/items that are not included in our Sourcewell pricing template.	*
61	If freight, delivery, or shipping is an additional cost to the Sourcewell participating entity, describe in detail the complete freight, shipping, and delivery program.	The customer is responsible to pay standard ground shipping charges and/or delivery fees. Overnight or priority shipping is available upon request. If the order is for equipment only, the customer will be responsible for the shipping charges. If the order is for equipment installed in a vehicle, the customer will be responsible for the delivery fee. Both will be invoiced at the time of delivery.	*
62	Specifically describe freight, shipping, and delivery terms or programs available for Alaska, Hawaii, Canada, or any offshore delivery.	The shipping and freight charges are the same as in question 61. The customer is responsible to pay standard ground shipping charges and/or delivery fees. Overnight or priority shipping is available upon request. If the order is for equipment only, the customer will be responsible for the shipping charges. If the order is for equipment installed in a vehicle, the customer will be responsible for the delivery fee. Both will be invoiced at the time of delivery.	*
63	Describe any unique distribution and/or delivery methods or options offered in your proposal.	RapidView does not have any unique distribution/delivery methods.	*

Table 12: Pricing Offered

Line Item	The Pricing Offered in this Proposal is: *	Comments
64	c. better than the Proposer typically offers to GPOs, cooperative procurement organizations, or state purchasing departments.	

Table 13: Audit and Administrative Fee

Line Item	Question	Response *	
65	Specifically describe any self-audit process or program that you plan to employ to verify compliance with your proposed Contract with Sourcewell. This process includes ensuring that Sourcewell participating entities obtain the proper pricing, that the Vendor reports all sales under the Contract each quarter, and that the Vendor remits the proper administrative fee to Sourcewell. Provide sufficient detail to support your ability to report quarterly sales to Sourcewell as described in the Contract template.	All of the RapidView dealers have a copy of the most current Sourcewell pricing. This is the first line to obtain the proper pricing. The CRM RapidView utilizes also has an option for Sourcewell pricing. So anytime a dealer or customer requests a quote for equipment, the most current pricing will be available. At the end of each quarter, our dealers report the Sourcewell deals that have occurred within the quarter. Our accounting department verifies those reports with the invoices that were distributed. Along with their day to day accounting methods and providing quarterly reports to Sourcewell, we will be able to account for every sale and not let anything get overlooked. We have submitted all of our Sourcewell reports and payments on time since the start of first contract in 2014.	*
66	If you are awarded a contract, provide a few examples of internal metrics that will be tracked to measure whether you are having success with the contract.	Here is a list of internal metrics that RapidView will use to track the success of the Sourcewell contract. - Overall Sourcewell sales year over year. - Percentage of Sourcewell sales verses overall RapidView sales - The number of new states or provinces each year that RapidView utilized the Sourcewell contract. - The increase of the percentage of sales each of the RapidView dealers account for year over year.	*
67	Identify a proposed administrative fee that you will pay to Sourcewell for facilitating, managing, and promoting the Sourcewell Contract in the event that you are awarded a Contract. This fee is typically calculated as a percentage of Vendor's sales under the Contract or as a per-unit fee; it is not a line-item addition to the Member's cost of goods. (See the RFP and template Contract for additional details.)	1% of the contract sale is the proposed administrative fee for Sourcewell..	*

Table 14A: Depth and Breadth of Offered Equipment Products and Services

Line Item	Question	Response *	
68	Provide a detailed description of the equipment, products, and services that you are offering in your proposal.	RapidView is the leading supplier of high quality, high production, professional sewer, water, industrial and other pipeline inspection cameras, sewer inspection software, and sewer pipe rehabilitation robotics to the North American market. RapidView partners with the oldest, largest, and most advanced manufacturers of such products, including IBAK Helmut Hunger GmbH & Co. KG, and others. RapidView products can be purchased through an extensive dealership network, with numerous service and repair centers to keep the customer up and operational. RapidView offers products for everyone's budget. Here is the list of product catagories RapidView has to offer. Push Cameras The MiniLite Pushrod System is a compact and versatile platform for inspection of small diameter pipelines. The system works with AxialCam 2, NANO, NANO-L, ORION Zoom, ORION-L Zoom, and POLARIS cameras. The MiniLite features an all-new controller module design. With a bright 10" touch screen and a built-in Windows PC, this controller is ready right out of the box. The new multifunction joystick allows precise control of our pan & tilt cameras. Portable Compact Mainline Systems The MainLite system is based around two very compact cable drums (KW 206 and KW 306) and the revolutionary BP series multi-function computer controllers. The entire unit can be mounted in a truck, or used in portable applications with the addition of our new ® MainLite Portable Cart, which provides seating and an ergonomic mount for the BP 100 controller.	

		4K/HD Mainline Systems You probably have a high-definition TV at home. Truth is that your mobile phone probably has a higher resolution than your current CCTV inspection system. The time has come to bring dramatically higher visual fidelity to the sewer inspection market. If you are a municipality interested in working with the best video data available or a contractor wishing to leverage the quality of your services - The ORPHEUS 2.0HD system is for you! The purpose of all CCTV systems is to capture images that allow system owners to make important rehabilitation decisions. Why settle for the low-resolution of a standard CCTV system? Now you can inspect in stunning 4K/High-Definition! Give system owners the information they need and avoid blurry, out of focus pictures. Our system is the only one in the world designed from the ground up to be 100% HD, ensuring that you capture clean, crisp video and high-resolution pictures. Lateral Launch The LISY 3 was designed to be easy to use, simple to maintain and safe to operate. The synchronized LISY drum works with your existing IBAK cable drum to payout and retrieve the cables at the same time. This dramatically reduces the time you need to spend setting up or retrieving the system after the inspection. PANORAMO Perhaps the greatest innovation in pipeline inspection technology in decades, the PANORAMO system has provided better data to engineers, reduced stress for operators, increased productivity and changed the way we inspect our underground infrastructure. Now, with the revolutionary PANORAMO 4K technology, it provides even better image quality. Inspect more than twice as much pipe per day, reduce your operating costs by more than 30% compared to normal CCTV and provide system users with incredible high-definition imagery! Cutters and Grinders Have you ever wished that you could have our high level of reliability, durability and attention to detail in your cutter system? Well, the wait is OVER! The MicroGATOR 2.0 is the powerful, single-point electric reinstatement cutter manufactured to the exacting quality standards of IBAK. With longer cable lengths, powerful and quiet cutting motors, and drive units designed to withstand the toughest jobs, these cutters have already reset the industry's expectations. Software The IKAS evolution is the newest generation of IBAK's powerful sewer analysis software, now available and supported in North America! Intuitive by design, the inspector is in full control of acquisition and sewer data analysis. PACP, MACP, and LACP data interface capable, IKAS evolution can be adapted to the needs of modern sewer inspection and each individual user's workflow. IKAS evolution is available in four base bundles with over two dozen extension options available for advanced inspections including; Full HD, 3D-GeoSense, Laser Measurement, and LaserScan profile analysis. Vehicle and Trailer Conversions RapiView converts quality vehicles, trailers and UTVs for deploying equipment effectively and safely. With a focus on ergonomic, user-friendly interiors, our conversions are hand built with superior craftsmanship and durability. Each design is created to meet the customer's individual specifications. We convert every major vehicle brand and model.	*
69	Within this RFP category there may be subcategories of solutions. List subcategory titles that best describe your products and services.	Pipeline inspection cameras Sewer inspection software Sewer pipe rehabilitation robotics Drainage inspection cameras Push sewer camera Lateral launch inspection cameras	*

Table 14B: Depth and Breadth of Offered Equipment Products and Services

Indicate below if the listed types or classes of equipment, products, and services are offered within your proposal. Provide additional comments in the text box provided, as necessary.

Line Item	Category or Type	Offered *	Comments	

70	Video, imaging, scope, and sensor equipment	(•) Yes ( ) No	RapidView is the leading supplier of high quality, high production, professional sewer, water, industrial and other pipeline inspection cameras. The list of inspection system categories RapidView offers includes the following: - Push Systems - Portable systems - Lateral Launch - 4K/HD Mainline - 4K PANORAMO Mainline - 4K PANORAMO Manhole - Laser Profiling - 3DGS Mapping	*
71	Flow and leak testing, detection, and monitoring equipment and tools	( ) Yes (•) No	We do not offer flow and leak testing, detection, and monitoring equipment and tools.	*
72	Underground infrastructure rehabilitation equipment	(•) Yes ( ) No	RapidView is the leading supplier of high-quality infrastructure rehabilitation equipment. The product line includes: - MicroGator 2.0 The NEW MicroGATOR 2.0 is the powerful, single-point electric reinstatement cutter manufactured to the exacting quality standards of IBAK. With longer cable lengths, powerful and quiet cutting motors, and drive units designed to withstand the toughest jobs, these cutters have already reset the industry's expectations. - MicroGATOR Air A pneumatic cutter designed with compatibility and convenience in mind. Equipped with a 1.5 horsepower pneumatic motor and manufactured to IBAK's exacting quality standards, the MicroGator® Air is a practical, yet reliable solution. One feature that makes this cutter unique is its focus on modularity. The MicroGator® Air is compatible with the components to our MainLite Systems including the KW206 and KW306 cable reels, our BP100 and BS10 control units, and even the same cable. With these components, all you need is a hose reel for the air hose and a compressor to have a complete cutting system.	*

73	Products, accessories, supplies, parts, technology, software, and services related to the offering of the solutions in questions 70-72 above	(•) Yes ( ) No	RapidView inspection systems will be delivered with everything a Sourcewell customer needs to get started. Out of the box, we provide the most effective inspection and rehabilitation systems in the industry. However, our customers are often the people who expect more from themselves and their equipment. They tackle the impossible jobs and when they do, we have a large selection of accessories available to help them succeed. In the Additional document section, there is RapidView's complete product catalog that lists products to expand customer's equipment capabilities, increase their safety, and make them more productive.	*

Table 15: Industry Specific Questions

Line Item	Question	Response *	
74	Describe the compatibility of any software products offered with industry hardware.	RapidView offers extensive software options to compliment the equipment explained in the RFP. The IKAS evolution is the newest generation of IBAK's powerful sewer analysis software, now available and supported in North America! Intuitive by design, the inspector is in full control of acquisition and sewer data analysis. PACP, MACP, and LACP data interface capable, IKAS evolution can be adapted to the needs of modern sewer inspection and each individual user's workflow. IKAS evolution is available in four base bundles with over two dozen extension options available for advanced inspections including; Full HD, 3D-GeoSense, Laser Measurement, and LaserScan profile analysis.	*
75	Describe the compatibility of any hardware products with industry software.	RapidView IBAK equipment works with more third-party software than any other manufacturer. Our equipment is integrated with PipeLogix, WinCan, Granite, IT Pipes, CT Spec, PipeTech, POSM and many others. We are always open to further development with any and all pipeline data logging or utility infrastructure management software programs. The fact that we don't focus on one software to the exclusion of others is our biggest strength. We understand that our customers use a variety of software programs and it is important that we make sure they can use what they want. Contractors (who works closely with our Sourcewell customers) especially need to be flexible and we want to make sure that they can remain so while using the best pipeline inspection equipment available, regardless of software.	

Table 16: Exceptions to Terms, Conditions, or Specifications Form

Line Item 76. **NOTICE**: To identify any exception, or to request any modification, to the Sourcewell template Contract terms, conditions, or specifications, a Proposer must submit the exception or requested modification on the **Exceptions to Terms, Conditions, or Specifications Form** immediately below. The contract section, the specific text addressed by the exception or requested modification, and the proposed modification must be identified in detail. Proposer's exceptions and proposed modifications are subject to review and approval of Sourcewell and will not automatically be included in the contract.

Contract Section	Term, Condition, or Specification	Exception or Proposed Modification

Documents

Ensure your submission document(s) conforms to the following:

1. Documents in PDF format are preferred. Documents in Word, Excel, or compatible formats may also be provided.

2. Documents should NOT have a security password, as Sourcewell may not be able to open the file. It is your sole responsibility to ensure that the uploaded document(s) are not either defective, corrupted or blank and that the documents can be opened and viewed by Sourcewell.

3. Sourcewell may reject any response where any document(s) cannot be opened and viewed by Sourcewell.

4. If you need to upload more than one (1) document for a single item, you should combine the documents into one zipped file. If the zipped file contains more than one (1) document, ensure each document is named, in relation to the submission format item responding to. For example, if responding to the Marketing Plan category save the document as “Marketing Plan.”

- Pricing - 2022 Sourcewell Price Pages.pdf - Friday December 03, 2021 12:55:44
- Financial Strength and Stability - RV FS - 2020 and 2012.pdf - Thursday December 02, 2021 13:14:06
- Marketing Plan/Samples - RapidView Marketing.pdf - Thursday December 02, 2021 13:16:32
- WMBE/MBE/SBE or Related Certificates (optional)
- Warranty Information - Warranty and Terms and Conditions of Sale.pdf - Wednesday December 01, 2021 15:19:40
- Standard Transaction Document Samples - RapidView Purchase Order Template.pdf - Sunday December 05, 2021 13:18:36
- Upload Additional Document - RapidView Sole Source and Product Catalog.zip - Friday December 03, 2021 09:25:34

Addenda, Terms and Conditions

PROPOSER AFFIDAVIT AND ASSURANCE OF COMPLIANCE

I certify that I am the authorized representative of the Proposer submitting the foregoing Proposal with the legal authority to bind the Proposer to this Affidavit and Assurance of Compliance:

1. The Proposer is submitting this Proposal under its full and complete legal name, and the Proposer legally exists in good standing in the jurisdiction of its residence.

2. The Proposer warrants that the information provided in this Proposal is true, correct, and reliable for purposes of evaluation for contract award.

3. The Proposer, including any person assisting with the creation of this Proposal, has arrived at this Proposal independently and the Proposal has been created without colluding with any other person, company, or parties that have or will submit a proposal under this solicitation; and the Proposal has in all respects been created fairly without any fraud or dishonesty. The Proposer has not directly or indirectly entered into any agreement or arrangement with any person or business in an effort to influence any part of this solicitation or operations of a resulting contract; and the Proposer has not taken any action in restraint of free trade or competitiveness in connection with this solicitation. Additionally, if Proposer has worked with a consultant on the Proposal, the consultant (an individual or a company) has not assisted any other entity that has submitted or will submit a proposal for this solicitation.

4. To the best of its knowledge and belief, and except as otherwise disclosed in the Proposal, there are no relevant facts or circumstances which could give rise to an organizational conflict of interest. An organizational conflict of interest exists when a vendor has an unfair competitive advantage or the vendor's objectivity in performing the contract is, or might be, impaired.

5. The contents of the Proposal have not been communicated by the Proposer or its employees or agents to any person not an employee or legally authorized agent of the Proposer and will not be communicated to any such persons prior to Due Date of this solicitation.

6. If awarded a contract, the Proposer will provide to Sourcewell Participating Entities the equipment, products, and services in accordance with the terms, conditions, and scope of a resulting contract.

7. The Proposer possesses, or will possess before delivering any equipment, products, or services, all applicable licenses or certifications necessary to deliver such equipment, products, or services under any resulting contract.

8. The Proposer agrees to deliver equipment, products, and services through valid contracts, purchase orders, or means that are acceptable to Sourcewell Members. Unless otherwise agreed to, the Proposer must provide only new and first-quality products and related services to Sourcewell Members under an awarded Contract.

9. The Proposer will comply with all applicable provisions of federal, state, and local laws, regulations, rules, and orders.

10. The Proposer understands that Sourcewell will reject RFP proposals that are marked "confidential" (or "nonpublic," etc.), either substantially or in their entirety. Under Minnesota Statutes Section 13.591, subdivision 4, all proposals are considered nonpublic data until the evaluation is complete and a Contract is awarded. At that point, proposals become public data. Minnesota Statutes Section 13.37 permits only certain narrowly defined data to be considered a "trade secret," and thus nonpublic data under Minnesota's Data Practices Act.

11. Proposer its employees, agents, and subcontractors are not:
    1. Included on the "Specially Designated Nationals and Blocked Persons" list maintained by the Office of Foreign Assets Control of the United States Department of the Treasury found at: https://www.treasury.gov/ofac/downloads/sdnlist.pdf;

    2. Included on the government-wide exclusions lists in the United States System for Award Management found at: https://sam.gov/SAM/; or

    3. Presently debarred, suspended, proposed for debarment, declared ineligible, or voluntarily excluded from programs operated

by the State of Minnesota; the United States federal government or the Canadian government, as applicable; or any Participating Entity. Vendor certifies and warrants that neither it nor its principals have been convicted of a criminal offense related to the subject matter of this solicitation.

☑ By checking this box I acknowledge that I am bound by the terms of the Proposer's Affidavit, have the legal authority to submit this Proposal on behalf of the Proposer, and that this electronic acknowledgment has the same legal effect, validity, and enforceability as if I had hand signed the Proposal. This signature will not be denied such legal effect, validity, or enforceability solely because an electronic signature or electronic record was used in its formation. - Steve Keranko, Director of Sales, RapidView LLC

The Proposer declares that there is an actual or potential Conflict of Interest relating to the preparation of its submission, and/or the Proposer foresees an actual or potential Conflict of Interest in performing the contractual obligations contemplated in the bid.

○ **Yes** ◉ **No**

The Bidder acknowledges and agrees that the addendum/addenda below form part of the Bid Document.

Check the box in the column "**I have reviewed this addendum"** below to acknowledge each of the addenda.

File Name	I have reviewed the below addendum and attachments (if applicable)	Pages
Addendum_1_Underground_Infrastructure_Inspect_Equip_RFP_120721 Fri November 19 2021 11:33 AM	☑	1

Sponsored by: Interim City Manager

RESOLUTION NO. _____

A RESOLUTION OF THE CITY COMMISSION OF THE CITY OF OPA-LOCKA, FLORIDA, AUTHORIZING THE CITY MANAGER TO PIGGYBACK THE CITY OF LARGO CONTRACT WITH BLD SERVICES LLC FOR QUALIFIED PROFESSIONAL SERVICES FOR TRENCHLESS SANITARY AND STORM SEWER REHABILITATION (CITY OF LARGO ITB #24-B-806, AND ENTER INTO AN AGREEMENT WITH BLD SERVICES LLC FOR SEWER SYSTEM REPAIR SERVICES, IN AN AMOUNT NOT TO EXCEED EIGHTY THOUSAND, SIX HUNDRED SIXTY-FIVE DOLLARS ($80,665.00); PROVIDING FOR INCORPORATION OF RECITALS; PROVIDING FOR AN EFFECTIVE DATE.

WHEREAS, the Public Works Department of the City of Opa-Locka has been operating Pump Station No. 7 under moratorium status for a three (3) year period; and

WHEREAS, this station is subject to the Largo-Dade Consent Agreement, which prohibits new commerce sewer connections in this service area; and

WHEREAS, to resolve these issues and lift the moratorium, Staff recommends repairing the sewer system by means of lateral lining and rehabilitating the manholes; and

WHEREAS, additionally, the Glorieta Gardens Apartments is rebuilding its sewer collection system, which will reduce the load on Pump Station No. 7, helping to facilitate the pump station's return to satisfactory operation; and

WHEREAS, to expedite these improvements, the Interim City Manager proposes utilizing the City of Largo's piggyback agreement with BLD Services, LLC, ITB 24-B-806 for the necessary repairs and lateral lining at a cost of Eighty Thousand Six Hundred Sixty-Five Dollars (80,665.00); and

WHEREAS, City Administration seeks approval to proceed with this agreement. The pump station is located on Alexandria Drive near the 13300 block, within the City of Opa-Locka ("City"); and

WHEREAS, the City of Largo previously awarded a contract to BLD Services, LLC for Trenchless Sanitary and Storm Sewer Rehabilitation services (attached as Exhibit "A"), pursuant to its Invitation for Bid (ITB) No. 24-B-806), for a one-year period, with an option for one (1) year extension, commencing October 23, 2024 through September 30,

2025; and

WHEREAS, pursuant to Section 2-318(3) of the City's Purchasing Code (as approved by Ordinance 2020-07) the City may purchase and acquire under contracts with the federal government, the State of Florida or its political subdivisions and also municipal co-operative purchasing organizations and programs and when the City Manager has determined that the prices of the original contract are competitive and reasonable; and

WHEREAS, the City Commission finds that it is in the best interests of the City to piggyback the City of Largo contract with BLD Services, LLC, attached hereto as Exhibit "A", in order to benefit from already negotiated rates and enter into an agreement, attached hereto as Exhibit "B", for sewer system repairs by means of lateral lining and rehabilitating the manholes, as provided herein, in an amount not to exceed Eighty Thousand, Six Hundred Sixty-Five Dollars ($80,665.00).

NOW THEREFORE, BE IT RESOLVED BY THE CITY COMMISSION OF THE CITY OF OPA LOCKA, FLORIDA:

Section 1. RECITALS ADOPTED.

The recitals to the preamble herein are incorporated by reference.

Section 2. AUTHORIZATION

The City Commission of the City of Opa-Locka, Florida hereby authorizes the City Manager to piggyback the City of Largo contract with BLD Services, LLC, attached hereto as Exhibit "A", in order to benefit from already negotiated rates and enter into an agreement, attached hereto as Exhibit "B", for sewer system repairs by means of lateral lining and rehabilitating the manholes, as provided herein, in an amount not to exceed Eighty Thousand, Six Hundred Sixty-Five Dollars ($80,665.00).

SECTION 3. SCRIVENER'S ERRORS.

Sections of this Resolution may be renumbered or re-lettered and corrections of typographical errors which do not affect the intent may be authorized by the City Manager, or the City Manager's designee, following review by the City Attorney, without need of public hearing, by filing a corrected copy of same with the City Clerk.

SECTION 4. EFFECTIVE DATE.

This Resolution shall take effect upon the adoption and is subject to the approval of the Governor or Governor's Designee.

PASSED and **ADOPTED** this _____ day of _____, 2024.

_____
John Taylor, Mayor

ATTEST:

_____
Joanna Flores, City Clerk

APPROVED AS TO FORM
AND LEGAL SUFFICIENCY:

_____
Burnadette Norris-Weeks, P.A.
City Attorney

Moved by: _____

Seconded by: _____

VOTE:

Commissioner Bass	_____
Commissioner Santiago	_____
Commissioner Ervin	_____
Vice Mayor Kelley	_____
Mayor Taylor	_____

City of Opa-locka
Agenda Cover Memo

Department Director:	Airia Austin			**Department Director Signature:**			
Interim City Manager:	Sha'mecca Lawson			**ICM Signature**			
Commission Meeting Date:	12.11.2024		**Item Type:** *(Enter X in box)*	**Resolution**	**Ordinance**		**Other**
				X			
Fiscal Impact: *(Enter X in box)*	**Yes**	**No**	**Resolution Reading:** *(Enter X in box)*		**1st Reading**		**2nd Reading**
					X		
	X		**Public Hearing:** *(Enter X in box)*		**Yes**	**No**	**Yes**	**No**
					X			**X**
Funding Source: *Account#:*	*(Enter Fund & Dept)* Ex: N/A See Financial Impact section below		**Advertising Requirement:** *(Enter X in box)*		**Yes**		**No**
					X		
ILA Required: *(Enter X in box)*	**Yes**	**No**	**RFP/RFQ/Bid#:**				
	X						
Strategic Plan Related *(Enter X in box)*	**Yes**	**No**	**Strategic Plan Priority Area:** **Enhance Organizational** ☐ **Bus. & Economic Dev** ■ **Public Safety** ☐ **Quality of Education** ☐ **Qual. of Life & City Image** ■ **Communication** ☐		**Strategic Plan Obj./Strategy:** *(list the specific objective/strategy this item will address)*		
	X						
Sponsor Name	Interim City Manager		**Department:** Public Works		City Manager		

Short Title:

A RESOLUTION OF THE CITY COMMISSION OF THE CITY OF OPA-LOCKA AUTHORIZING THE INTERIM CITY MANAGER TO PIGGYBACK THE CITY OF LARGO'S AGREEMENT ITB 24-B-806 WITH BLD SERVICES, LLC TO REPAIR THE SEWER SYSTEM.

Staff Summary:

ISSUE / RECOMMENDATION – The Public Works Department has been operating Pump Station No. 7 under moratorium status for a three (3) year period. This station is subject to the Miami-Dade Consent Agreement, which prohibits new commerce sewer connections in this service area. To resolve these issues and lift the moratorium, staff recommends repairing the sewer system by means of lateral lining and rehabilitating the manholes.

Additionally, the Glorieta Gardens Apartments is rebuilding its sewer collection system, which will reduce the load on Pump Station No. 7, helping to facilitate the pump station's return to satisfactory operation.

To expedite these improvements, staff proposes utilizing the City of Largo's piggyback agreement with BLD Services, LLC, ITB 24-B-806 for the necessary repairs and lateral lining at a cost of $80,665.00. City Administration seeks approval to proceed with this agreement. The pump station is located on Alexandria Drive near the 13300 block.

Financial Impact: This Lateral Lining Repair was allocated for in the FY 25 adopted budget in the following account:

Account	Description	Available	Expenditure	Remaining Balance
35-533340	Other Contracting Services	$128,694.20	$80,665.00	$48,029.20

This is a one-time budgeted expenditure and does not have any long-term or ongoing impact on fund balances.

Proposed Action:

Staff recommend the City Commission authorize the Interim City Manager to piggyback the City of Largo's agreement with BLD Services, LLC and further authorize the Interim City Manager to enter into an agreement for said services.

Attachment:

Agenda Cover
BLD Services, LLC Proposal
City of Largo FL Award Letter

CITY OF OPA-LOCKA AGREEMENT FOR SEWER SYSTEM REPAIR SERVICES

Piggyback City of Largo Invitation for Bid (ITB) 24-B-806 for Trenchless Sanitary and Storm Sewer Rehabilitation Services

This Agreement is made this ____ day of _____, 2024, between the City of Opa-Locka, a municipal corporation organized and existing under the laws of the State of Florida and whose address is 780 Fisherman Street, Opa-Locka, Florida 33054 (the **"City"),** and BLD Services LLC whose address is 2424 Tyler Street, Kenner, LA 70062 (the **"Contractor").**

WITNESSETH

WHEREAS, the Contractor desires to enter into this Agreement ("Agreement") with City to provide sewer system repairs by means of lateral lining and rehabilitating the manholes (the "Project"); and

WHEREAS, the parties desire to incorporate the terms and conditions of the solicitation and contractual arrangement between City of Largo and the Contractor, as set forth in the City of Largo Invitation for Bid for Trenchless Sanitary and Storm Sewer Rehabilitation Services ("the ITB"); and

WHEREAS, the City Code provides authority for the City to select and contract through the use of the competitive bid process of another government entity as an exception to the otherwise required formal bidding process.

NOW THEREFORE, in consideration of the mutual covenants set forth in this Agreement, the receipt and sufficiency of which is acknowledged, the parties agree as follows:

Section 1. Term. The term of this Agreement commences upon fully execution of this agreement and continues through September 30, 2025, unless terminated earlier by its terms.

Section 2. Contract Terms. The Contractor agrees to provide the City with Trenchless Sanitary and Storm Sewer Rehabilitation services in accordance with the City's requirements as set forth herein and the Standard Contract between City of Largo and the Contractor dated on or about October 4, 2024 (the "City of Largo Agreement"), attached hereto and incorporated herein as Exhibit "A". The exhibits are incorporated into this Agreement for all purposes, and are collectively referred to as the "Contract Documents", and represent the entire agreement between the parties. In the event of conflict between or among the Contract Documents, the order of priority shall be: this Agreement, the City of Largo Agreement and the Contractor's accepted proposal.

Section 3. Scope of Work

The following provisions are included:

A City shall pay Contractor no more than the unit prices set forth in the Contract Documents and in accordance with the provisions of the Contract Documents. If the City requires services not covered by unit prices already made a part of the Contract Documents, the Contractor shall submit a detailed written proposal to the authorized City representative before providing any such services. For these purposes, Airia Austin, as Public Works Director, shall be the City Representative and may be reached at 305-953-2868 Ext 1450.

B. If permits are required, Contractor shall submit complete and accurate permit applications to all applicable permitting agencies within ten work days of receiving from the City all documents necessary to file such permit applications. The City shall pay all permit and related fees directly to the permitting agencies, including any permit fees charged by the City.

C. The City of Opa-Locka shall be substituted for the City of Largo with regard to any and all provisions of the City of Largo Agreement, the ITB, and the Contractor's bid, including by example and not limitation, with regard to bond requirements, insurance, indemnification, licensing, termination, default and ownership of documents. All recitals, representations, and warranties of Contractor made in those documents are restated as if set forth fully herein, made for the benefit of the City, and incorporated herein.

D. Contractor shall not commence work on the Project unless and until the requirements for insurance have been fully met by Contractor and appropriate evidence thereof, in the City's sole discretion, has been provided to and approved by the City.

Section 4. Assignment. Neither party may assign its rights or obligations under this Agreement without the consent of the other.

Section 5. Notice. Notice hereunder shall be provided in writing by certified mail, return receipt requested, or customarily used overnight transmission with proof of delivery, to the following parties, with mandatory copies, as provided below:

For City:	Sha'mecca Lawson, Interim City Manager City of Opa-Locka 780 Fisherman Street Opa-Locka, Florida, Florida 33054
Copy To:	Burnadette Norris-Weeks, Esq. City Attorney Burnadette Norris-Weeks, P.A. 401 NW 7th Avenue Fort Lauderdale, Florida 33311
For Contractor:	Daniel P Wagner III 2424 Tyler Street Kenner, LA 70062
Copy To:	Corporation Service Company 1201 Hays Street Tallahassee, FL 32301

Section 6. Severability. This Agreement sets forth the entire agreement between Contractor and City with respect to the subject matter of this Agreement. This Agreement supersedes all prior and contemporaneous negotiations, understandings and agreements, written or oral, between the parties. This Agreement may not be modified except by the parties' mutual agreement set forth in writing and signed by the parties.

Section 7. E-Verify. In accordance with Florida Statutes §448.095, the Contractor, prior to commencement of services or payment by the City, will provide to the City proof of participation/enrollment in the E-Verify system of the Department of Homeland Security. Evidence of participation/enrollment will be a printout of the Company's "Company Profile" page from the E-verify system. Failure to be continually enrolled and participating in the E-Verify program will be a breach of contract which will be grounds for immediate termination of the contract by the City. The Contractor will not hire any employee who has not been vetted through E-Verify. The Contractor may not subcontract any work for the City to any subcontractor that has not provided an affidavit stating that the subcontractor does not employ, contract with or subcontract with an unauthorized alien.

IF CONSULTANT HAS QUESTIONS REGARDING THE APPLICATION OF CHAPTER 119, FLORIDA STATUTES, TO CONSULTANT'S DUTY TO PROVIDE PUBLIC RECORDS RELATING TO THIS AGREEMENT, CONTACT THE CUSTODIAN OF PUBLIC RECORDS AT (305) 953-2800, email: jflores@Opalockafl.gov OR BY MAIL: City of Opa-locka – City Clerk's Office, 780 Fisherman Street, Opa-Locka, FL 33054

IN WITNESS WHEREOF, the parties hereto have accepted, made, and executed this Agreement upon the terms and conditions above stated on the day and year first above written.

[REMAINDER OF PAGE LEFT INTENTIONALLY BLANK]

CITY: City of Opa-Locka

By:_____
Sha'mecca Lawson, City Manager

Date:_____

APPROVED AS TO FORM AND LEGAL SUFFICIENCYFOR THE USE OF AND RELIANCE BY THE CITY OF OPA-LOCKA ONLY:

By:_____
City Attorney
Burnadette Norris-Weeks, P.A.

By:_____
Joanna Flores, City Clerk

CONTRACTOR:
BLD Services LLC

By: _____ Witness: _____

_____ _____
PRINT NAME

_____
TITLE

Date:_____

December 3, 2024

Proposal# BLD-24338

Owen H. Carney Sr.
Public Works & Utilities Department
12950 Lejeune (NW 42nd Ave)
Opa-Locka, FL 33054

RE: Proposal for Lateral Lining at Cairo Ln. and NW 135TH Street, FL - Basin 7
BLD Services, LLC proposes to furnish all necessary materials, labor, tools, equipment, supplies, and supervision necessary to perform the work outlined in the DESCRIPTION and the SCOPE OF WORK, with the exception of those items specifically addressed in this proposal. Prices are from the existing City Largo, FL— contract, Trenchless Sanitary and Storm Sewer Rehabilitation Services Contract No. 24-B-806, a BLD Services, LLC contract, which is available for piggyback.

.

Scope of Work: This work shall be performed in conjunction with the "PRICING SCHEDULE" and "TERMS & CONDITIONS" as outlined within this proposal

In response to your request, we hereby submit subcontract pricing for the above-referenced project as follows:

Item #	Description	Qty	Unit	Unit $	Total $
31	Initial Service Lateral CCTV Inspection (4"-6") From Main, Up To 30 LF	1	EA	$475.00	$475.00
32	Initial Service Lateral CCTV Inspection (4"-6"), From Main, Per LF, Beyond Initial 30 Ft.	40	LF	$1.00	$40.00
35	CIPP Lateral Liner, 4" - 6" Dia. Up To 30 LF, with Main/Lateral Connection System	14	EA	$3,950.00	$55,300.00
36	CIPP Lateral Liner, 4" -6" Dia. Per LF Beyond Initial 30 Ft.	150	LF	$5.00	$750.00
49	Mobilization, > 1,200 LF or > 10 Lateral Liners per Task Order	1	EA	$2,500.00	$2,500.00
50	Maintenance of Traffic, FDOT	12	DAY	$1,800.00	$21,600.00
				Total	$80,665.00

We appreciate the opportunity to submit this quote. If you have any questions, do not hesitate to contact me.

Sincerely,

Mark Dalmau

Mark Dalmau
Project Manager
BLD Services, LLC

PO Box 296
Largo, FL 33779
Largo.com

Administration Department
Office of Performance and Budget
201 Highland Avenue N
Largo, FL 33770

June 24, 2024

Attention Prospective Bidder(s):

All communications pertaining to this contract shall carry the reference "**City Bid No. 24-B-806**"
Please see below Table of Contents for review.

1.Bid Package Information- Pertinent Information about Bid

2. Bid Proposal Form – This contains what would be considered the proposal intended to be submitted by your firm.

3. Qualifications- Prospective Bidder Qualifications

4. Specifications- Specifications for bid

5. Agreement – Provided for reference and include the following:

- Main Contract Document – Project specific information and signature page.
- General Conditions – City Standard Contract Clauses. These documents are licensed from the EJCDC and used in every construction project. We cannot delete anything from these documents, but we can state in the *Supplemental Conditions* that we have removed it.
- Supplemental Conditions – Any language that we want removed from or added to the general requirements are listed here.

Respectfully,

Kezia Southern
Procurement Analyst
Office of Performance and Budget
City of Largo | The Community of Choice in Tampa Bay
ksouthern@largo.com
727-587-6727 ext 7604

Prepared by:

CITY OF LARGO, FLORIDA
ENGINEERING SERVICES DEPARTMENT

TRENCHLESS SANITARY AND STORM SEWER REHABILITATION SERVICES

Contract Number: 24-B-806

June 14, 2024

The proposed work specified in this contract is subject to City Commission approval; therefore, any, all, or part of the work specified herein may be increased, decreased, or deleted in accordance with City Commission direction.

All work within Pinellas County or FDOT jurisdiction shall be performed in accordance with Pinellas County and/or FDOT standards and utility license terms, provisions, and conditions.

All other work under this contract shall be governed by these specifications and by all applicable City of Largo standards.

All communications pertaining to this contract shall carry the reference "City Bid No. **24-B-806"**.

Jerald Woloszynski
Jerald Woloszynski, P.E.
Director of Engineering Services

BIDDING DOCUMENTS FOR

TRENCHLESS SANITARY AND STORM SEWER REHABILITATION SERVICES

Contract No.: 24-B-806

BIDDING REQUIREMENTS
Advertisement (C-111)
Instructions to Bidders (C-200)
Bid Form (C-410)
Qualifications Statement (C-451)
Corporate Acknowledgment
Certificate as to Corporate Official
Debarment, Suspension Vendor Responsibility Certification Form
Non-Collusive Affidavit
Drug-Free Workplace Certification
Trench Safety Act
Exhibit F Foreign Countries of Concern Affidavit

CONTRACT DOCUMENTS
Agreement (C-520)*****
General Conditions of the Construction Contract (C-700)
Supplementary Conditions (C-800)*****
Contractor's Application for Payment (C-620)
Notice of Award (C-510)
Notice to Proceed (C-550)
Work Change Directive (C-940)
Change Order (C-941)
Field Order (C-942)
Certificate of Substantial Completion (C-625)
Notice of Acceptability of Work (C-626)

***** **It is Owner's expectation that exceptions will be resolved through Addenda prior to bid submittal in order to expedite contract execution.**

TECHNICAL SPECIFICATIONS – CITY OF LARGO

DIVISION 1 - GENERAL REQUIREMENTS

01025	Measurement and Payment
01045	Execution of the Work
01050	Field Engineering
01090	References
01200	Project Meetings
01310	Construction Progress Schedules
01370	Schedule of Values
01410	Testing Laboratory Services
01510	Temporary Utilities
01530	Protection of Work and Property
01550	Contractor Access and Parking
01560	Temporary Controls
01570	Traffic Control
01610	Product Requirements and Options
01650	Product Delivery Requirements
01660	Product Storage and Protection Requirements

01670	Checkout and Startup Procedures
01730	Operation and Maintenance Data
01740	Cleaning and Waste Management
01782	Project Record Documents
01783	Spare Parts and Extra Material
01821	Instruction of Owner's Personnel

DIVISION 2 - SITEWORK

02010	Subsurface Investigation
02050	Demolition
02064	Modifications to Existing Structures
02100	Clearing and Grubbing
02200	Earthwork
02540	Site Grading
02550	Finish Grading
02604	Utility Structures
02607	Manhole Height Adjustment
02710	Underdrain System
02720	Segment Replacement (Pipe and Tap Connections)
02731	Television Inspection
02740	Cured-in-Place Pipe
02750	Chemical Grouting
02762	Sewer Service Lateral CIPP Lining
02934	Sodding
02944	Seeding

DIVISION 3 - CONCRETE

03400	Precast Concrete

DIVISION 7 - THERMAL AND MOISTURE PROTECTION

07900	Joint Fillers, Sealants, and Caulking

DIVISION 9 - FINISHES

09900	Painting

DIVISION 11 - EQUIPMENT

11000	Equipment - General
11100	Pumps – General
11115	Horizontal Centrifugal Self-Priming Pumps
11130	Submersible Solids-Handling Pumps
11170	Liquid Chemical Metering Pump Skid

DIVISION 15 - MECHANICAL CONSTRUCTION

15000	Basic Mechanical Requirements
15006	Ductile Iron Pipe and Fittings
15008	PVC Pipe
15030	Piping and Equipment Identification Systems
15095	Valves, General

15100 Valve Operators and Electric Valve Actuators
15101 Butterfly Valve
15104 Ball Valves
15105 Check Valves
15107 Fire Hydrants
15108 Gate Valves (Including Knife Gate Valves)
15109 Plug Valves
15114 Miscellaneous Valves
15140 Pipe Supports

DIVISION 16 - ELECTRICAL

16000 Basic Electrical Requirements
16111 Conduit
16123 Wire and Cable
16130 Boxes
16141 Wiring Devices
16170 Grounding and Bonding
16190 Supporting Devices
16195 Electrical Identification
16440 Disconnect Switches
16500 Lighting

DIVISION 17 - INSTRUMENTATION

17000 Instrumentation and Control, General
17500 Control Panel
17650 Pressure Gauges
17701 Electromagnetic Flow Meters
17749 Submersible Level (Pressure) Sensor
17760 Pressure Indicating Transmitters

CITY OF LARGO
LARGO, Fl

TRENCHLESS SANITARY AND STORM SEWER REHABILITATION SERVICES
CONTRACT NUMBER: 24-B-806

ADVERTISEMENT FOR BIDS

Sealed Bids for the **Trenchless Sanitary and Storm Sewer Rehabilitation Services** will be received by **the City of Largo**, at the **Office of Performance and Budget**, until **4:30 PM** local time on July 26,2024, at which time the Bids received will be **publicly** opened and read. The Project consists of **Trenchless Sanitary and Storm Sewer Rehabilitation, which includes: the rehabilitation of pipelines and conduit (8 inch through 84 inch and laterals) by various trenchless methods on an "as needed" basis; trenchless pipe rehabilitation work includes wastewater and stormwater pipe cleaning, inspection, grouting, and lining services. These rehabilitation methods may be used in a variety of gravity and pressure applications such as sanitary sewers, storm sewers, and force mains.**

The City reserves the right to award separate contracts for the various rehabilitation methods. The decision on which method will be used in any given situation will be made at the sole discretion of the City. The repairs assigned to the Contractor may require prioritization by the City. The Owner may order the Contractor to complete the awarded work in accordance with a specific chronological sequence.

The term of this engagement will be from the date of award through September 30, 2025. The City reserves the right to extend the Contract for one additional one-year extension with mutual agreement between Contractor and Owner. The estimated quantities identified in the Schedule of Bid Prices are for comparison only. The locations to be repaired will be as directed by the City of Largo designated representative. The Work shall be assigned on a Task Order basis as need arises.

Bids will be received for multiple blanket Contracts. Bids shall be on a unit price basis as indicated in the Bid Form.

The Issuing Office for the Bidding Documents is: **Office of Performance and Budget, 201 Highland Avenue, Largo, FL 33770. Direct questions concerning this Bid to Kezia Southern, Procurement Analyst, ksouthern@largo.com.** Prospective Bidders may obtain copies of the Bidding Documents from the Issuing Office as described below. **Deadline for questions is July 02, 2024.**

Bidding Documents may be downloaded from Demandstar.com, free of charge.

Bidders may elect to submit their response to this ITB by electronic submission through the free on-line services of DemandStar. All documents and attachments must be uploaded by the date and time indicated. Bidders who are e-bidding for the first time are strongly encouraged to contact DemandStar at 866-273-1863 or obtain assistance by e-mailing questions to Support@demandstar.com. Solicitation responses uploaded to DemandStar after the solicitation response due date and time shall not be considered. It is the sole responsibility of the bidder to ensure that its solicitation response is uploaded and submitted before such date and time. The City of Largo is not responsible for delays caused by power outages or internet failures. No exceptions will be made.

No Pre-bid conference will be held at this time.

Copyright © 2013 National Society of Professional Engineers, American Council of Engineering Companies, and American Society of Civil Engineers. All rights reserved.

IT IS THE BIDDER'S RESPONSIBILITY TO CHECK DEMANDSTAR FOR FINAL DOCUMENTS PRIOR TO SUBMITTAL

Owner: **City of Largo**

By: **Kezia Southern**

Title: **Procurement Analyst**

Date: **June 14, 2024**

+ + END OF ADVERTISEMENT FOR BIDS + +

Copyright © 2013 National Society of Professional Engineers, American Council of Engineering Companies, and American Society of Civil Engineers. All rights reserved.

SUGGESTED INSTRUCTIONS TO BIDDERS

TABLE OF CONTENTS

Page

Article 1 – Defined Terms 1

Article 2 – Copies of Bidding Documents 1

Article 3 – Qualifications of Bidders 1

Article 4 – Site and Other Areas; Existing Site Conditions; Examination of Site; Owner's Safety Program; Other Work at the Site 1

Article 5 – Bidder's Representations 3

Article 6 – Pre-Bid Conference 4

Article 7 – Interpretations and Addenda 4

Article 8 – Bid Security 4

Article 9 – Contract Times 4

Article 10 – Liquidated Damages 4

Article 11 – Substitute and "Or-Equal" Items 4

Article 12 – Subcontractors, Suppliers, and Others 4

Article 13 – Preparation of Bid 5

Article 14 – Basis of Bid 6

Article 15 – Submittal of Bid 6

Article 16 – Modification and Withdrawal of Bid 7

Article 17 – Opening of Bids 7

Article 18 – Bids to Remain Subject to Acceptance 7

Article 19 – Evaluation of Bids and Award of Contract 7

Article 20 – Bonds and Insurance 8

Article 21 – Signing of Agreement 8

Copyright © 2013 National Society of Professional Engineers, American Council of Engineering Companies, and American Society of Civil Engineers. All rights reserved.

ARTICLE 1 – DEFINED TERMS

1.01 Terms used in these Instructions to Bidders have the meanings indicated in the General Conditions and Supplementary Conditions. Additional terms used in these Instructions to Bidders have the meanings indicated below:

A. *Issuing Office* – The office from which the Bidding Documents are to be issued.

ARTICLE 2 – COPIES OF BIDDING DOCUMENTS

2.01 Complete sets of the Bidding Documents may be obtained from the Issuing Office in the number and format stated in the advertisement or invitation to bid.

2.02 Complete sets of Bidding Documents shall be used in preparing Bids; neither Owner nor Engineer assumes any responsibility for errors or misinterpretations resulting from the use of incomplete sets of Bidding Documents.

2.03 Owner, in making copies of Bidding Documents available on the above terms, do so only for the purpose of obtaining Bids for the Work and do not authorize or confer a license for any other use.

ARTICLE 3 – QUALIFICATIONS OF BIDDERS

3.01 To demonstrate Bidder's qualifications to perform the Work, Bidder shall submit with its Bid a completed Qualifications Statement, included with these Bidding Requirements.

3.02 A Bidder's failure to submit required qualification information within the times indicated may disqualify Bidder from receiving an award of the Contract.

3.03 No requirement in this Article 3 to submit information will prejudice the right of Owner to seek additional pertinent information regarding Bidder's qualifications.

3.04 Bidder is advised to carefully review those portions of the Bid Form requiring Bidder's representations and certifications.

ARTICLE 4 – SITE AND OTHER AREAS; EXISTING SITE CONDITIONS; EXAMINATION OF SITE; OWNER'S SAFETY PROGRAM; OTHER WORK AT THE SITE

The purpose of this solicitation is to award an annual purchasing agreement to one or more Bidders based on line item Bid Price as defined in article 14 and Bidder's qualifications for Task Order Work. Paragraphs 4.01 through 4.05 will apply when Owner issues a Task Order Request for quote to a Contractor (Successful Bidder).

4.01 *Site and Other Areas*

A. The Site is identified in the Bidding Documents. By definition, the Site includes rights-of-way, easements, and other lands furnished by Owner for the use of the Contractor. Any additional lands required for temporary construction facilities, construction equipment, or storage of materials and equipment, and any access needed for such additional lands, are to be obtained and paid for by Contractor.

4.02 *Existing Site Conditions*

A. Subsurface and Physical Conditions; Hazardous Environmental Conditions

1. The Order Requests for Quote will identify:

Copyright © 2013 National Society of Professional Engineers, American Council of Engineering Companies, and American Society of Civil Engineers. All rights reserved.

a. those reports known to Owner of explorations and tests of subsurface conditions at or adjacent to the Site.

b. those drawings known to Owner of physical conditions relating to existing surface or subsurface structures at the Site (except Underground Facilities).

c. reports and drawings known to Owner relating to Hazardous Environmental Conditions that have been identified at or adjacent to the Site.

d. Technical Data contained in such reports and drawings.

2. The reports and drawings referenced in the preceding subparagraph 1 are not part of the Contract Documents, but the Technical Data contained therein upon whose accuracy Contractor is entitled to rely, as provided in the General Conditions, shall be identified and established in the Task Order Request for quote. Contractor shall be responsible for any interpretation or conclusion Contractor draws from any Technical Data or any other data, interpretations, opinions, or information contained in such reports or shown or indicated in such drawings.

3. The default definition of Technical Data set forth in Article 1 of the General Conditions will apply to this Contract.

B. Underground Facilities: Information and data with respect to existing Underground Facilities at or adjacent to the Site are set forth in the Task Order Request for Quote and are based upon information and data furnished to Owner and Engineer by owners of such Underground Facilities, including Owner, or others.

C. Adequacy of Data: Provisions concerning responsibilities for the adequacy of data furnished to Contractors with respect to subsurface conditions, other physical conditions, and Underground Facilities, and possible changes in the Task Order Request for Quote due to differing or unanticipated subsurface or physical conditions appear in Paragraphs 5.03, 5.04, and 5.05 of the General Conditions. Provisions concerning responsibilities for the adequacy of data furnished to Contractors with respect to a Hazardous Environmental Condition at the Site, if any, and possible changes in the Contract Documents due to any Hazardous Environmental Condition uncovered or revealed at the Site which was not shown or indicated in the Task Order Request for Quote to be within the scope of the Work, appear in Paragraph 5.06 of the General Conditions.

4.03 *Site Visit and Testing by Bidders*

A. Contractor shall conduct the required Site visit during normal working hours, and shall not disturb any ongoing operations at the Site.

B. Contractor is not required to conduct any subsurface testing, or exhaustive investigations of Site conditions.

C. On request, and to the extent Owner has control over the Site, and schedule permitting, the Owner will provide Contractor access to the Site to conduct such additional examinations, investigations, explorations, tests, and studies as Contractor deems necessary for preparing and submitting a successful Bid. Owner will not have any obligation to grant such access if doing so is not practical because of existing operations, security or safety concerns, or restraints on Owner's authority regarding the Site.

D. Contractor shall comply with all applicable Laws and Regulations regarding excavation and location of utilities, obtain all permits, and comply with all terms and conditions established by Owner or by property owners or other entities controlling the Site with respect to

Copyright © 2013 National Society of Professional Engineers, American Council of Engineering Companies, and American Society of Civil Engineers. All rights reserved.

schedule, access, existing operations, security, liability insurance, and applicable safety programs.

E. Contractor shall fill all holes and clean up and restore the Site to its former condition upon completion of such explorations, investigations, tests, and studies.

4.04 *Owner's Safety Program*

A. Site visits and work at the Site may be governed by an Owner safety program. As the General Conditions indicate, if an Owner safety program exists, it will be noted in the Supplementary Conditions.

4.05 *Other Work at the Site*

A. The Task Order Request for Quote will include identification of the general nature of other work of which Owner is aware (if any) that is to be performed at the Site by Owner or others (such as utilities and other prime contractors) and relates to the Work contemplated by these Bidding Documents. If Owner is party to a written contract for such other work, then on request, Owner will provide to each Bidder access to examine such contracts (other than portions thereof related to price and other confidential matters), if any.

ARTICLE 5 – BIDDER'S REPRESENTATIONS

5.01 It is the responsibility of each Bidder before submitting a Bid to:

A. examine and carefully study the Bidding Documents, and any data and reference items identified in the Bidding Documents;

B. become familiar with and satisfy itself as to all Laws and Regulations that may affect cost, progress, and performance of the Work;

C. consider the information known to Bidder itself; information commonly known to contractors doing business in the locality; the Bidding Documents; and quantities and Specifications identified in the Bidding Documents, with respect to the effect of such information, observations, and documents on (1) the cost, progress, and performance of the Work; (2) the means, methods, techniques, sequences, and procedures of construction to be employed by Bidder; and (3) Bidder's safety precautions and programs;

D. agree, based on the information and observations referred to in the preceding paragraph, that at the time of submitting its Bid no further examinations, investigations, explorations, tests, studies, or data are necessary for the determination of its Bid for performance of the Work at the price bid and within the times required, and in accordance with the other terms and conditions of the Bidding Documents;

E. become aware of the general nature of the work to be performed by Owner and others at the Site that relates to the Work as indicated in the Bidding Documents;

F. promptly give Owner written notice of all conflicts, errors, ambiguities, or discrepancies that Bidder discovers in the Bidding Documents and confirm that the written resolution thereof by Owner is acceptable to Bidder;

G. determine that the Bidding Documents are generally sufficient to indicate and convey understanding of all terms and conditions for the performance and furnishing of the Work; and

H. agree that the submission of a Bid will constitute an incontrovertible representation by Bidder that Bidder has complied with every requirement of this Article, that without

Copyright © 2013 National Society of Professional Engineers, American Council of Engineering Companies, and American Society of Civil Engineers. All rights reserved.

exception the Bid and all prices in the Bid are premised upon performing and furnishing the Work required by the Bidding Documents.

ARTICLE 6 – PRE-BID CONFERENCE

6.01 There will be no pre-bid conference for this advertisement.

ARTICLE 7 – INTERPRETATIONS AND ADDENDA

7.01 All questions about the meaning or intent of the Bidding Documents are to be submitted to Owner in writing. Interpretations or clarifications considered necessary by Owner in response to such questions will be issued by Addenda delivered to all parties recorded as having received the Bidding Documents. Questions received less than seven days prior to the date for opening of Bids may not be answered. Only questions answered by Addenda will be binding. Oral and other interpretations or clarifications will be without legal effect.

7.02 Addenda may be issued to clarify, correct, supplement, or change the Bidding Documents.

ARTICLE 8 – BID SECURITY

8.01 No bid security is required for this advertisement.

ARTICLE 9 – CONTRACT TIMES

9.01 The number of days within which, or the dates by which, the Work is to be substantially completed, and completed and ready for final payment, are set forth in the Agreement.

ARTICLE 10 – LIQUIDATED DAMAGES

10.01 Provisions for liquidated damages, if any, for failure to timely attain a Milestone, Substantial Completion, or completion of the Work in readiness for final payment, are set forth in the Agreement.

ARTICLE 11 – SUBSTITUTE AND "OR-EQUAL" ITEMS

11.01 The Contract for the Work, as awarded, will be on the basis of materials and equipment specified or described in the Bidding Documents without consideration during the bidding and Contract award process of possible substitute or "or-equal" items. In cases in which the Contract allows the Contractor to request that Owner authorize the use of a substitute or "or-equal" item of material or equipment, application for such acceptance may not be made to and will not be considered by Owner until after the Effective Date of the Contract.

11.02 All prices that Bidder sets forth in its Bid shall be based on the presumption that the Contractor will furnish the materials and equipment specified or described in the Bidding Documents, as supplemented by Addenda. Any assumptions regarding the possibility of post-Bid approvals of "or-equal" or substitution requests are made at Bidder's sole risk.

ARTICLE 12 – SUBCONTRACTORS, SUPPLIERS, AND OTHERS

12.01 A Bidder shall be prepared to retain specific Subcontractors, Suppliers, or other individuals or entities for the performance of the Work if required by the Bidding Documents (most commonly in the Specifications) to do so. If a prospective Bidder objects to retaining any such

Copyright © 2013 National Society of Professional Engineers, American Council of Engineering Companies, and American Society of Civil Engineers. All rights reserved.

Subcontractor, Supplier, or other individual or entity, and the concern is not relieved by an Addendum, then the prospective Bidder should refrain from submitting a Bid.

12.02 Subsequent to the submittal of the Bid, Owner may not require the Successful Bidder or Contractor to retain any Subcontractor, Supplier, or other individual or entity against which Contractor has reasonable objection.

12.03 The apparent Successful Bidder, and any other Bidder so requested, shall within five days after Bid opening, submit to Owner a list of the Subcontractors or Suppliers proposed for the following portions of the Work: any phase of the Work not performed by Bidder.

If requested by Owner, such list shall be accompanied by an experience statement with pertinent information regarding similar projects and other evidence of qualification for each such Subcontractor, Supplier, or other individual or entity. If Owner, after due investigation, has reasonable objection to any proposed Subcontractor, Supplier, individual, or entity, Owner may, before the Notice of Award is given, request apparent Successful Bidder to submit an acceptable substitute, in which case apparent Successful Bidder shall submit a substitute, Bidder's Bid price will be increased (or decreased) by the difference in cost occasioned by such substitution, and Owner may consider such price adjustment in evaluating Bids and making the Contract award.

12.04 If apparent Successful Bidder declines to make any such substitution, Owner may award the Contract to a Bidder that proposes to use acceptable Subcontractors, Suppliers, or other individuals or entities. Any Subcontractor, Supplier, individual, or entity so listed and against which Owner or Engineer makes no written objection prior to the giving of the Notice of Award will be deemed acceptable to Owner and Engineer subject to subsequent revocation of such acceptance as provided in Paragraph 7.06 of the General Conditions.

ARTICLE 13 – PREPARATION OF BID

13.01 The Bid Form is included with the Bidding Documents.

A. All blanks on the Bid Form shall be completed in ink and the Bid Form signed in ink. Erasures or alterations shall be initialed in ink by the person signing the Bid Form. A Bid price shall be indicated for each section, Bid item, alternate, adjustment unit price item, and unit price item listed therein.

B. If the Bid Form expressly indicates that submitting pricing on a specific alternate item is optional, and Bidder elects to not furnish pricing for such optional alternate item, then Bidder may enter the words "No Bid" or "Not Applicable."

13.02 A Bid by a corporation shall be executed in the corporate name by a corporate officer (whose title must appear under the signature), accompanied by evidence of authority to sign. The corporate address and state of incorporation shall be shown.

13.03 A Bid by a partnership shall be executed in the partnership name and signed by a partner (whose title must appear under the signature), accompanied by evidence of authority to sign. The partnership's address for receiving notices shall be shown.

13.04 A Bid by a limited liability company shall be executed in the name of the firm by a member or other authorized person and accompanied by evidence of authority to sign. The state of formation of the firm and the firm's address for receiving notices shall be shown.

13.05 A Bid by an individual shall show the Bidder's name and address for receiving notices.

Copyright © 2013 National Society of Professional Engineers, American Council of Engineering Companies, and American Society of Civil Engineers. All rights reserved.

13.06 A Bid by a joint venture shall be executed by an authorized representative of each joint venturer in the manner indicated on the Bid Form. The joint venture's address for receiving notices shall be shown.

13.07 All names shall be printed in ink below the signatures.

13.08 The Bid shall contain an acknowledgment of receipt of all Addenda, the numbers of which shall be filled in on the Bid Form.

13.09 Postal and e-mail addresses and telephone number for communications regarding the Bid shall be shown.

13.10 The Bid shall contain evidence of Bidder's authority and qualification to do business in the state where the Project is located, or Bidder shall covenant in writing to obtain such authority and qualification prior to award of the Contract and attach such covenant to the Bid. Bidder's state contractor license number, if any, shall also be shown on the Bid Form.

ARTICLE 14 – BASIS OF BID

14.01 *Unit Price*

A. Bidders shall submit a Bid on a unit price basis for each item of Work listed in the unit price section of the Bid Form.

B. The "Bid Price" (sometimes referred to as the extended price) for each unit price Bid item will be the product of the "Estimated Quantity" (which Owner or its representative has set forth in the Bid Form) for the item and the corresponding "Bid Unit Price" offered by the Bidder. The total of all unit price Bid items will be the sum of these "Bid Prices"; such total will be used by Owner for Bid comparison purposes. The final quantities and Contract Price will be determined in accordance with Paragraph 13.03 of the General Conditions.

C. Discrepancies between the multiplication of units of Work and unit prices will be resolved in favor of the unit prices. Discrepancies between the indicated sum of any column of figures and the correct sum thereof will be resolved in favor of the correct sum.

14.02 *Allowances*

A. For cash allowances the Bid price shall include such amounts as the Bidder deems proper for Contractor's overhead, costs, profit, and other expenses on account of cash allowances, if any, named in the Contract Documents, in accordance with Paragraph 13.02.B of the General Conditions.

ARTICLE 15 – SUBMITTAL OF BID

15.01 With each copy of the Bidding Documents, a Bidder is furnished one separate unbound copy of the Bid Form. The unbound copy of the Bid Form **and an electric copy of the Bid Form n XLSX file format on a USB port thumb drive** is to be completed and submitted and the other documents required to be submitted under the terms of Article 7 of the Bid Form.

15.02 A Bid shall be received no later than the date and time prescribed and at the place indicated in the advertisement or invitation to bid and shall be enclosed in a plainly marked package with the Project title (and, if applicable, the designated portion of the Project for which the Bid is submitted), the name and address of Bidder, and shall be accompanied by the other required documents. If a Bid is sent by mail or other delivery system, the sealed envelope containing the Bid shall be enclosed in a separate package plainly marked on the outside with the notation "BID

Copyright © 2013 National Society of Professional Engineers, American Council of Engineering Companies, and American Society of Civil Engineers. All rights reserved.

ENCLOSED." A mailed Bid shall be addressed to the City of Largo, Office of Performance and Budget, 201 Highland Avenue NE, Largo, FL 33770, Attn: Kezia Southern, Procurement Analyst.

15.03 Bids received after the date and time prescribed for the opening of bids, or not submitted at the correct location or in the designated manner, will not be accepted and will be returned to the Bidder unopened.

ARTICLE 16 – MODIFICATION AND WITHDRAWAL OF BID

16.01 A Bid may be withdrawn by an appropriate document duly executed in the same manner that a Bid must be executed and delivered to the place where Bids are to be submitted prior to the date and time for the opening of Bids. Upon receipt of such notice, the unopened Bid will be returned to the Bidder.

16.02 If a Bidder wishes to modify its Bid prior to Bid opening, Bidder must withdraw its initial Bid in the manner specified in Paragraph 16.01 and submit a new Bid prior to the date and time for the opening of Bids.

16.03 If within 24 hours after Bids are opened any Bidder files a duly signed written notice with Owner and promptly thereafter demonstrates to the reasonable satisfaction of Owner that there was a material and substantial mistake in the preparation of its Bid, that Bidder may withdraw its Bid, and the Bid security will be returned. Thereafter, if the Work is rebid, that Bidder will be disqualified from further bidding on the Work.

ARTICLE 17 – OPENING OF BIDS

17.01 Bids will be opened at the time and place indicated in the advertisement or invitation to bid and, unless obviously non-responsive, read aloud publicly. An abstract of the amounts of the base Bids and major alternates, if any, will be made available to Bidders after the opening of Bids.

ARTICLE 18 – BIDS TO REMAIN SUBJECT TO ACCEPTANCE

18.01 All Bids will remain subject to acceptance for the period of time stated in the Bid Form.

ARTICLE 19 – EVALUATION OF BIDS AND AWARD OF CONTRACT

19.01 Owner reserves the right to reject any or all Bids, including without limitation, nonconforming, nonresponsive, unbalanced, or conditional Bids. Owner will reject the Bid of any Bidder that Owner finds, after reasonable inquiry and evaluation, to not be responsible. If Bidder purports to add terms or conditions to its Bid, takes exception to any provision of the Bidding Documents, or attempts to alter the contents of the Contract Documents for purposes of the Bid, then the Owner will reject the Bid as nonresponsive; provided that Owner also reserves the right to waive all minor informalities not involving price, time, or changes in the Work.

19.02 If Owner awards the contract for the Work, such award shall be to all qualified Bidders.

19.03 Evaluation of Bids

A. In evaluating Bids, Owner will consider whether or not the Bids comply with the prescribed requirements, unit prices, and other data, as may be requested in the Bid Form or prior to the Notice of Award.

19.04 In evaluating whether a Bidder is responsible, Owner will consider the qualifications of the Bidder and may consider the qualifications and experience of Subcontractors and Suppliers

Copyright © 2013 National Society of Professional Engineers, American Council of Engineering Companies, and American Society of Civil Engineers. All rights reserved.

proposed for those portions of the Work for which the identity of Subcontractors and Suppliers must be submitted as provided in the Bidding Documents.

19.05 Owner may conduct such investigations as Owner deems necessary to establish the responsibility, qualifications, and financial ability of Bidders and any proposed Subcontractors or Suppliers.

ARTICLE 20 – BONDS AND INSURANCE

20.01 Article 6 of the General Conditions, as may be modified by the Supplementary Conditions, sets forth Owner's requirements as to insurance. When the Successful Bidder delivers the Agreement (executed by Successful Bidder) to Owner, it shall be accompanied by required insurance documentation.

ARTICLE 21 – SIGNING OF AGREEMENT

21.01 When Owner issues a Notice of Award to the Successful Bidder, it shall be accompanied by the unexecuted counterparts of the Agreement along with the other Contract Documents as identified in the Agreement. Within 15 days thereafter, Successful Bidder shall execute and deliver the required number of counterparts of the Agreement (and any insurance documentation required to be delivered by the Contract Documents) to Owner. Within ten days thereafter, Owner shall deliver one fully executed counterpart of the Agreement to Successful Bidder, together with printed and electronic copies of the Contract Documents as stated in Paragraph 2.02 of the General Conditions.

Copyright © 2013 National Society of Professional Engineers, American Council of Engineering Companies, and American Society of Civil Engineers. All rights reserved.

BID FORM

TRENCHLESS SANITARY AND STORM SEWER REHABILITATION SERVICES

Contract No: 24-B-806

Copyright © 2013 National Society of Professional Engineers, American Council of Engineering Companies, and American Society of Civil Engineers. All rights reserved.

TABLE OF CONTENTS

Page

Article 1 – Bid Recipient 1

Article 2 – Bidder's Acknowledgements 1

Article 3 – Bidder's Representations 1

Article 4 – Bidder's Certification 2

Article 5 – Basis of Bid 2

Article 6 – Time of Completion 3

Article 7 – Attachments to this Bid 3

Article 8 – Defined Terms 3

Article 9 – Bid Submittal 4

Copyright © 2013 National Society of Professional Engineers, American Council of Engineering Companies, and American Society of Civil Engineers. All rights reserved.

ARTICLE 1 – BID RECIPIENT

1.01 This Bid is submitted to:

City of Largo
Office of Performance and Budget
201 Highland Avenue NE
Largo, FL 33770
Attn: Kezia Southern, Procurement Analyst

1.02 The undersigned Bidder proposes and agrees, if this Bid is accepted, to enter into an Agreement with Owner in the form included in the Bidding Documents to perform all Work as specified or indicated in the Bidding Documents for the prices and within the times indicated in this Bid and in accordance with the other terms and conditions of the Bidding Documents.

ARTICLE 2 – BIDDER'S ACKNOWLEDGEMENTS

2.01 Bidder accepts all of the terms and conditions of the Instructions to Bidders. This Bid will remain subject to acceptance for 60 days after the Bid opening, or for such longer period of time that Bidder may agree to in writing upon request of Owner.

ARTICLE 3 – BIDDER'S REPRESENTATIONS

3.01 In submitting this Bid, Bidder represents that:

A. Bidder has examined and carefully studied the Bidding Documents, and any data and reference items identified in the Bidding Documents, and hereby acknowledges receipt of the following Addenda:

Addendum No.	Addendum, Date

B. Bidder has satisfied itself as to the general, local, and Site conditions that may affect cost, progress, and performance of the Work.

C. Bidder is familiar with and has satisfied itself as to all Laws and Regulations that may affect cost, progress, and performance of the Work.

D. Bidder has considered the information known to Bidder itself; information commonly known to contractors doing business in the locality; and the Bidding Documents.

E. Bidder agrees, based on the information and observations referred to in the preceding paragraph, that no further examinations, investigations, explorations, tests, studies, or data are necessary for the determination of this Bid for performance of the Work at the price bid, and in accordance with the other terms and conditions of the Bidding Documents.

F. Bidder is aware of the general nature of work to be performed by Owner that relates to the Work as indicated in the Bidding Documents.

Copyright © 2013 National Society of Professional Engineers, American Council of Engineering Companies, and American Society of Civil Engineers. All rights reserved.

G. Bidder has given Owner written notice of all conflicts, errors, ambiguities, or discrepancies that Bidder has discovered in the Bidding Documents, and confirms that the written resolution thereof by Owner is acceptable to Bidder.

H. The Bidding Documents are generally sufficient to indicate and convey understanding of all terms and conditions for the performance and furnishing of the Work.

I. The submission of this Bid constitutes an incontrovertible representation by Bidder that Bidder has complied with every requirement of this Article, and that without exception the Bid and all prices in the Bid are premised upon performing and furnishing the Work required by the Bidding Documents.

ARTICLE 4 – BIDDER'S CERTIFICATION

4.01 Bidder certifies that:

A. This Bid is genuine and not made in the interest of or on behalf of any undisclosed individual or entity and is not submitted in conformity with any collusive agreement or rules of any group, association, organization, or corporation;

B. Bidder has not directly or indirectly induced or solicited any other Bidder to submit a false or sham Bid;

C. Bidder has not solicited or induced any individual or entity to refrain from bidding; and

D. Bidder has not engaged in corrupt, fraudulent, collusive, or coercive practices in competing for the Contract. For the purposes of this Paragraph 4.01.D:

1. "corrupt practice" means the offering, giving, receiving, or soliciting of any thing of value likely to influence the action of a public official in the bidding process;

2. "fraudulent practice" means an intentional misrepresentation of facts made (a) to influence the bidding process to the detriment of Owner, (b) to establish bid prices at artificial non-competitive levels, or (c) to deprive Owner of the benefits of free and open competition;

3. "collusive practice" means a scheme or arrangement between two or more Bidders, with or without the knowledge of Owner, a purpose of which is to establish bid prices at artificial, non-competitive levels; and

4. "coercive practice" means harming or threatening to harm, directly or indirectly, persons or their property to influence their participation in the bidding process or affect the e execution of the Contract.

ARTICLE 5 – BASIS OF BID

5.01 Bidder will complete the Work in accordance with the Contract Documents for the following price(s):

REMIANDER OF PAGE INTENTIONALLY LEFT BLANK

Copyright © 2013 National Society of Professional Engineers, American Council of Engineering Companies, and American Society of Civil Engineers. All rights reserved.

Bidder will complete the Work for the following prices:

SCHEDULE OF BID PRICES

Bid Number	Bid Item	Quantity	Unit	Unit Cost	Total Cost
Group 1	**Cured-In-Place Pipe (CIPP) Main Line Lining**				
1	8 in. x 6 mm CIPP	17,500	LF		
2	Cost for each 1.5 mm Increase in Thickness of 8 in. Liner	7,500	LF		
3	10 in. x 6 mm CIPP	3,750	LF		
4	Cost for each 1.5 mm Increase in Thickness of 10 in. Liner	2,500	LF		
5	12 in. x 6 mm CIPP	1,250	LF		
6	Cost for each 1.5 mm Increase in Thickness of 12 in. Liner	750	LF		
7	15 in. x 6 mm CIPP	500	LF		
8	Cost for each 1.5 mm Increase in Thickness of 15 in. Liner	250	LF		
9	18 in. x 6 mm CIPP	500	LF		
10	Cost for each 1.5 mm Increase in Thickness of 18 in. Liner	250	LF		
11	21 in. x 7.5 mm CIPP	125	LF		
12	Cost for each 1.5 mm Increase in Thickness of 21 in. Liner	75	LF		
13	24 in. x 7.5 mm CIPP	250	LF		
14	Cost for each 1.5 mm Increase in Thickness of 24 in. Liner	125	LF		
15	30 in. x 9 mm CIPP	250	LF		
16	Cost for each 1.5 mm Increase in Thickness of 30 in. Liner	125	LF		
17	36 in. x 10.5 mm CIPP	250	LF		
18	Cost for each 1.5 mm Increase in Thickness of 36 in. Liner	125	LF		
19	42 in. x 10.5 mm CIPP	200	LF		
20	Cost for each 1.5 mm Increase in Thickness of 42 in. Liner	100	LF		
21	48 in. x 12 mm CIPP	200	LF		
22	Cost for each 1.5 mm Increase in Thickness of 48 in. Liner	100	LF		
23	54 in. x 12 mm CIPP	150	LF		
24	Cost for each 1.5 mm Increase in Thickness of 54 in. Liner	100	LF		
25	60 in. x 12 mm CIPP	150	LF		
26	Cost for each 1.5 mm Increase in Thickness of 60 in. Liner	100	LF		
27	72 in. x 12 mm CIPP	150	LF		
28	Cost for each 1.5 mm Increase in Thickness of 72 in. Liner	100	LF		
29	84 in. x 12 mm CIPP	100	LF		
30	Cost for each 1.5 mm Increase in Thickness of 84 in. Liner	75	LF		
	Group 1 Total Bid:				

SCHEDULE OF BID PRICES

Bid Number	Bid Item	Quantity	Unit	Unit Cost	Total Cost
Group 2	**Cured-In-Place Pipe (CIPP) Service Lateral Lining**				
31	Initial Service Lateral CCTV Inspection (4″-6″) From Main, Up To 30 LF	250	EA		
32	Initial Service Lateral CCTV Inspection (4″-6″), From Main, Per LF, Beyond Initial 30 Ft.	2,500	LF		
33	Initial Service Lateral CCTV Inspection (4″-6″) From Clean Out, Up To 30 LF	100	EA		
34	Initial Service Lateral CCTV Inspection (4″-6″) From Clean Out, Per LF, Beyond Initial 30 Ft.	1,250	LF		
35	CIPP Lateral Liner, 4″ - 6″ Dia. Up To 30 LF, with Main/Lateral Connection System	125	EA		
36	CIPP Lateral Liner, 4″ -6″ Dia. Per LF Beyond Initial 30 Ft.	1,875	LF		
37	Clean-Out Installation in Grass Area (Up to 5 ft. in depth)	50	EA		
38	Clean-Out Installation in Asphalt Area (Up to 5 ft. in depth)	5	EA		
39	Clean-Out Installation in Concrete Area (Up to 5 ft. in depth)	50	EA		
40	Clean-Out Installation (Beyond 5 ft. in depth)	75	VF		
	Group 2 Total Bid:				
Group 3	**Joint Sealing with Chemical Grout**				
41	Test Joint - 8″ Dia.	1,500	EA		
42	Test Joint - 10″ Dia.	500	EA		
43	Test Joint – 12″ Dia.	500	EA		
44	Grout Seal Failed Joints – 8″ Dia	1,000	EA		
45	Grout Seal Failed Joints – 10″ Dia	375	EA		
46	Grout Seal Failed Joints – 12″ Dia	375	EA		
47	Seal Service Lateral Connections	125	EA		
	Group 3 Total Bid:				
Group 4	**Common Work Tasks**				
48	Mobilization, </= 1,200 LF or </= 10 Lateral Liners per Task Order	5	EA		
49	Mobilization, > 1,200 LF or > 10 Lateral Liners per Task Order	10	EA		
50	Maintenance of Traffic, FDOT	5	DAY		
51	Maintenance of Traffic, City/County Arterial/Collector	15	DAY		
52	Maintenance of Traffic, City/County Minor/Residential	25	DAY		
53	Work in Rear Easements and/or Away From Travelways	15	EA		
54	Specialty Cleaning, 8″ Dia. (Groups 1, and 2)	250	LF		
55	Specialty Cleaning, 10″- 18″ Dia. (Groups 1, and 2)	250	LF		
56	Specialty Cleaning, 24″-36″ Dia. (Group 1 Only)	150	LF		
57	Specialty Cleaning, 42″-54″ Dia. (Group 1 Only)	150	LF		

SCHEDULE OF BID PRICES

Bid Number	Bid Item	Quantity	Unit	Unit Cost	Total Cost
58	Specialty Cleaning, 60″-84″ Dia. (Group 1 Only)	100	LF		
59	Hammer Tap Removal	5	EA		
60	Lateral Reinstatement and Grouting (Groups 1, and 2)	250	EA		
61	Warranty Cleaning and CCTV Inspection	7,500	LF		
	Group 4 Total Bid:				

Bidder acknowledges that (1) each Bid Unit Price includes an amount considered by Bidder to be adequate to cover Contractor's overhead and profit for each separately identified item, and (2) estimated quantities are not guaranteed, and solely for the purpose of comparison of Bids, and final payment for all unit price Bid items will be based on actual quantities, determined as provided in the Contract Documents.

ARTICLE 6 – TIME OF COMPLETION

6.01 The City and Contractor shall determine the number of days to substantial and final completion for each Task Order. Bidder agrees that Work for each Task Order shall be substantially completed within the amount of time set forth in each respective Task Order for substantial completion , after the Contract Times commence to run as provided in the respective Task Order. The Work shall be completed and ready for final payment in accordance with Paragraph 15.06 of the General Conditions within the amount of time set forth in each respective Task Order for final completion, after the Contract Times commence to run as provided in the respective Task Order.

ARTICLE 7 – ATTACHMENTS TO THIS BID

7.01 The following documents are submitted with and made a condition of this Bid:

A. Evidence of authority to do business in the state of the Project; or a written covenant to obtain such license within the time for acceptance of Bids;

B. Provide proof of registration with PCCLB (Pinellas County Construction Licensing Board) by supplying a copy of your registration card.

C. Required Bidder Qualification Statement with supporting data;

D. Corporate acknowledgement;

E. Certificate as to corporate official;

F. Debarment, suspension vendor responsibility certification form;

G. Non-Collusive Affidavit;

H. Drug-free workplace certification; and

I. Trench safety act

J. Foreign Countries of Concern Affidavit

ARTICLE 8 – DEFINED TERMS

8.01 The terms used in this Bid with initial capital letters have the meanings stated in the Instructions to Bidders, the General Conditions, and the Supplementary Conditions.

ARTICLE 9 – BID SUBMITTAL

BIDDER: *[Indicate correct name of bidding entity]*

_____

By:
[Signature] _____

Copyright © 2013 National Society of Professional Engineers, American Council of Engineering Companies, and American Society of Civil Engineers. All rights reserved.

_____

[Printed name] _____

(If Bidder is a corporation, a limited liability company, a partnership, or a joint venture, attach evidence of authority to sign.)

Attest:
[Signature] _____

[Printed name] _____

Title: _____

Submittal Date: _____

Address for giving notices:

_____

_____

_____

Telephone Number: _____

Fax Number: _____

Contact Name and e-mail address: _____

_____

Bidder's License No.: _____
(where applicable)

Copyright © 2013 National Society of Professional Engineers, American Council of Engineering Companies, and American Society of Civil Engineers. All rights reserved.

QUALIFICATIONS STATEMENT

THE INFORMATION SUPPLIED IN THIS DOCUMENT IS CONFIDENTIAL TO THE EXTENT PERMITTED BY LAWS AND REGULATIONS

1. SUBMITTED BY:

Official Name of Firm: _____

Address: _____

_____

_____

2. SUBMITTED TO: _____

3. SUBMITTED FOR: _____

Owner: **City of Largo**

Project Name: **Trenchless Sanitary and Storm Sewer Rehabilitation Services**

_____

_____

_____

TYPE OF WORK: _____

_____

_____

4. CONTRACTOR'S CONTACT INFORMATION

Contact Person: _____

Title: _____

Phone: _____

Email: _____

5. AFFILIATED COMPANIES:

Name: _____

Address: _____

6. **TYPE OF ORGANIZATION:**

☐ SOLE PROPRIETORSHIP

Name of Owner: _____

Doing Business As: _____

Date of Organization: _____

☐ PARTNERSHIP

Date of Organization: _____

Type of Partnership: _____

Name of General Partner(s): _____

_____

_____

☐ CORPORATION

State of Organization: _____

Date of Organization: _____

Executive Officers:

- President: _____

- Vice President(s): _____

_____

_____

- Treasurer: _____

- Secretary: _____

☐ LIMITED LIABILITY COMPANY

State of Organization: _____

Date of Organization: _____

Members: _____

_____

☐ JOINT VENTURE

Sate of Organization: _____

Date of Organization: _____

Form of Organization: _____

Joint Venture Managing Partner

- Name: _____

- Address: _____

_____

_____

Joint Venture Managing Partner

- Name: _____

- Address: _____

_____

Joint Venture Managing Partner

- Name: _____

- Address: _____

_____

7. LICENSING

Jurisdiction: _____

Type of License: _____

License Number: _____

Jurisdiction: _____

Type of License: _____

License Number:

7a. PCCLB (Pinellas County Licensing Board)

Registration Number: _____

8. CERTIFICATIONS CERTIFIED BY:

Disadvantage Business Enterprise: _____

Minority Business Enterprise: _____

Woman Owned Enterprise: _____

Small Business Enterprise: _____

Other (_____): _____

9. BONDING INFORMATION

Bonding Company: _____

Address: _____

_____

Bonding Agent: _____

Address: _____

_____

_____

Contact Name: _____

Phone: _____

Aggregate Bonding Capacity: _____

Available Bonding Capacity as of date of this submittal: _____

10. CONSTRUCTION EXPERIENCE:

Current Experience:

List on **Schedule A** all uncompleted projects currently under contract (If Joint Venture list each participant's projects separately).

Previous Experience:

List on **Schedule B** all projects completed within the last 5 Years (If Joint Venture list each participant's projects separately).

Has firm listed in Section 1 ever failed to complete a construction contract awarded to it?

☐YES ☐ NO

If YES, attach as an Attachment details including Project Owner's contact information.

Has any Corporate Officer, Partner, Joint Venture participant or Proprietor ever failed to complete a construction contract awarded to them in their name or when acting as a principal of another entity?

☐ YES ☐ NO

If YES, attach as an Attachment details including Project Owner's contact information.

Are there any judgments, claims, disputes or litigation pending or outstanding involving the firm listed in Section 1 or any of its officers (or any of its partners if a partnership or any of the individual entities if a joint venture)?

☐YES ☐ NO

If YES, attach as an Attachment details including Project Owner's contact information.

11. SAFETY PROGRAM:

Name of Contractor's Safety Officer:_____

Include the following as attachments:

Provide as an Attachment Contractor's (and Contractor's proposed Subcontractors and Suppliers furnishing or performing Work having a value in excess of 10 percent of the total amount of the Bid) OSHA No. 300- Log & Summary of Occupational Injuries & Illnesses for the past 5 years.

Provide as an Attachment Contractor's (and Contractor's proposed Subcontractors and Suppliers furnishing or performing Work having a value in excess of 10 percent of the total amount of the Bid) list of all OSHA Citations & Notifications of Penalty (monetary or other) received within the last 5 years (indicate disposition as applicable) - IF NONE SO STATE.

Provide as an Attachment Contractor's (and Contractor's proposed Subcontractors and Suppliers furnishing or performing Work having a value in excess of 10 percent of the total amount of the Bid) list of all safety citations or violations under any state all received within the last 5 years (indicate disposition as applicable) - IF NONE SO STATE.

Provide the following for the firm listed in Section V (and for each proposed Subcontractor furnishing or performing Work having a value in excess of 10 percent of the total amount of the Bid) the following (attach additional sheets as necessary):

Workers' compensation Experience Modification Rate (EMR) for the last 5 years:

YEAR	_____	EMR	_____
YEAR	_____	EMR	_____
YEAR	_____	EMR	_____
YEAR	_____	EMR	_____
YEAR	_____	EMR	_____

Total Recordable Frequency Rate (TRFR) for the last 5 years:

YEAR	_____	TRFR	_____
YEAR	_____	TRFR	_____
YEAR	_____	TRFR	_____
YEAR	_____	TRFR	_____
YEAR	_____	TRFR	_____

Total number of man-hours worked for the last 5 Years:

YEAR	_____	TOTAL NUMBER OF MAN-HOURS	_____
YEAR	_____	TOTAL NUMBER OF MAN-HOURS	_____
YEAR	_____	TOTAL NUMBER OF MAN-HOURS	_____
YEAR	_____	TOTAL NUMBER OF MAN-HOURS	_____
YEAR	_____	TOTAL NUMBER OF MAN-HOURS	_____

Provide Contractor's (and Contractor's proposed Subcontractors and Suppliers furnishing or performing Work having a value in excess of 10 percent of the total amount of the Bid) Days Away From Work, Days of Restricted Work Activity or Job Transfer (DART) incidence rate for the particular industry or type of Work to be performed by Contractor and each of Contractor's proposed Subcontractors and Suppliers) for the last 5 years:

YEAR	_____	DART	_____
YEAR	_____	DART	_____
YEAR	_____	DART	_____
YEAR	_____	DART	_____
YEAR	_____	DART	_____

12. EQUIPMENT:

MAJOR EQUIPMENT:

List on **Schedule C** all pieces of major equipment available for use on Owner's Project.

I HEREBY CERTIFY THAT THE INFORMATION SUBMITTED HEREWITH, INCLUDING ANY ATTACHMENTS, IS TRUE TO THE BEST OF MY KNOWLEDGE AND BELIEF.

NAME OF ORGANIZATION: _____

BY: _____

TITLE: _____

DATED: _____

NOTARY ATTEST:

SUBSCRIBED AND SWORN TO BEFORE ME

THIS _____ DAY OF _____, 20___

NOTARY PUBLIC - STATE OF _____

MY COMMISSION EXPIRES:_____

REQUIRED ATTACHMENTS

1. Schedule A (Current Experience).
2. Schedule B (Previous Experience).
3. Schedule C (Major Equipment).
4. Audited balance sheet for each of the last 3 years for firm named in Section 1.
5. Evidence of authority for individuals listed in Section 7 to bind organization to an agreement.
6. Resumes of officers and key individuals (including Safety Officer) of firm named in Section 1.
7. Required safety program submittals listed in Section 13.
8. Additional items as pertinent.

SCHEDULE A

CURRENT EXPERIENCE

Project Name	Owner's Contact Person	Design Engineer	Contract Date	Type of Work	Status	Cost of Work
	Name: Address: Telephone:	Name: Company: Telephone:				
	Name: Address: Telephone:	Name: Company: Telephone:				
	Name: Address: Telephone:	Name: Company: Telephone:				
	Name: Address: Telephone:	Name: Company: Telephone:				

EJCDC® C-451, Qualifications Statement.
Copyright © 2013 National Society of Professional Engineers, American Council of Engineering Companies, and American Society of Civil Engineers. All rights reserved.

	Name: Address: Telephone:	Name: Company: Telephone:				
	Name: Address: Telephone:	Name: Company: Telephone:				

Copyright © 2013 National Society of Professional Engineers, American Council of Engineering Companies, and American Society of Civil Engineers. All rights reserved.

	Name: Address: Telephone:	Name: Company: Telephone:				

Copyright © 2013 National Society of Professional Engineers, American Council of Engineering Companies,
and American Society of Civil Engineers. All rights reserved.

SCHEDULE B

PREVIOUS EXPERIENCE (Include ALL Projects Completed within last 5 years)

Project Name	Owner's Contact Person	Design Engineer	Contract Date	Type of Work	Status	Cost of Work
	Name: Address: Telephone:	Name: Company: Telephone:				
	Name: Address: Telephone:	Name: Company: Telephone:				
	Name: Address: Telephone:	Name: Company: Telephone:				
	Name: Address: Telephone:	Name: Company: Telephone:				
	Name: Address: Telephone:	Name: Company: Telephone:				
	Name: Address: Telephone:	Name: Company: Telephone:				
	Name: Address: Telephone:	Name: Company: Telephone:				

Copyright © 2013 National Society of Professional Engineers, American Council of Engineering Companies, and American Society of Civil Engineers. All rights reserved.

SCHEDULE B

PREVIOUS EXPERIENCE (Include ALL Projects Completed within last 5 years)

Project Name	Owner's Contact Person	Design Engineer	Contract Date	Type of Work	Status	Cost of Work
	Name: Address: Telephone:	Name: Company: Telephone:				
	Name: Address: Telephone:	Name: Company: Telephone:				
	Name: Address: Telephone:	Name: Company: Telephone:				
	Name: Address: Telephone:	Name: Company: Telephone:				
	Name: Address: Telephone:	Name: Company: Telephone:				
	Name: Address: Telephone:	Name: Company: Telephone:				
	Name: Address: Telephone:	Name: Company: Telephone:				

Copyright © 2013 National Society of Professional Engineers, American Council of Engineering Companies, and American Society of Civil Engineers. All rights reserved.

SCHEDULE C - LIST OF MAJOR EQUIPMENT AVAILABLE

ITEM	PURCHASE DATE	CONDITION	ACQUIRED VALUE

EJCDC® C-451, Qualifications Statement.
Copyright © 2013 National Society of Professional Engineers, American Council of Engineering Companies, and American Society of Civil Engineers. All rights reserved.

CORPORATE ACKNOWLEDGMENT

STATE OF_____

COUNTY OF_____

The foregoing instrument was acknowledged before me this _____ day of

_____, _____

by _____(name of officer or agent, title of officer or agent),

of_____(name of corporation

acknowledging), a_____(state or place of

incorporation) corporation, on behalf of the corporation. He/She is (personally known to me) (or has produced identification) _____(type of identification) (as identification) and (did/did not) take an oath.

_____
Signature of Person Taking
Acknowledgment

_____
Name of Acknowledger Typed,
Printed or Stamped

CERTIFICATE AS TO CORPORATE PRINCIPAL

STATE OF FLORIDA)
) SS
COUNTY OF)
_____)

I HEREBY CERTIFY that a meeting of the Board of Directors of _____, a corporation under the laws of the State of _____ held on _____, 20____ the following resolution was duly passed and adopted:

"RESOLVED", that_____, as_____ President of the corporation, be he/she is hereby authorized to execute the Agreement dated _____, 20____, between the City of Largo, Florida and this Corporation, and that his/her execution thereof, attested by the Secretary of the Corporation and with corporate seal affixed, shall be the official act and deed of this Corporation".

I further certify that said resolution is now in full force and effect.

IN WITNESS WHEREOF, I have hereunto set my hand and affixed the official seal of the Corporation this _____ day of _____, 20____.

_____
Signature of Secretary

_____
(Print or Type)

(Seal)

Subscribed and sworn to before me
this _____ day of _____, 20_____

_____
Notary Public

My Commission Expires: _____

Debarment, Suspension
Vendor Responsibility Certification

The Proposer certifies that the Proposer and any person associated with the Proposer in the capacity of owner, partner, director, officer, principal, investigator, project director, manager, auditor, or position involving the administration of public funds:

(a.) is not presently debarred, suspended, proposed for debarment, declared ineligible, or voluntarily excluded from government transactions by any federal, state, or local governmental entity;

(b.) has not within a three-year period preceding this certification been convicted of or had a civil judgment rendered against it for: commission of fraud or a criminal offense in connection with obtaining, attempting to obtain, or performing a federal, state, or local government transaction or public contract; violation of federal or state antitrust statutes; or commission of embezzlement, theft, forgery, bribery, falsification or destruction of records, making false statements, or receiving stolen property;

(c.) is not presently indicted for or otherwise criminally or civilly charged by a federal, state, or local governmental entity with commission of any of the offenses enumerated this certification; or

(d.) has not within a three-year period preceding this certification had one or more federal, state, or local government public transactions terminated for cause or default.

By executing this Agreement and each and every renewal hereof (if renewal is separately provided for herein), pursuant to section 287.135, Florida Statutes, Contractor certifies, represents, and warrants that:

(a.) it is not on the Scrutinized Companies with Activities in Sudan List,

(b.) it is not on the Scrutinized Companies with Activities in the Iran Petroleum Energy Sector List,

(c.) it is not on the Scrutinized Companies with Activities in Iran Terrorism Sectors List,

(d.) that it does not have Business operations or is engaged in business in Cuba or Syria, and

(e.) that it is not engaged or engaging in a Boycott of Israel, and that all such certifications were true at the time it submitted its bid or proposal for this Agreement, as of the Effective Date of this Agreement, and as of the effective date of any renewal of this Agreement.

The Proposer certifies that it shall not knowingly enter into any transaction with any subcontractor, material supplier, or vendor about which any of the foregoing paragraphs are not true.

Notwithstanding anything contained in this Agreement to the contrary, the City of Largo may terminate this Agreement immediately for cause if:

1) Contractor is found to have submitted a false certification regarding (a) – (d) above in accordance with section 287.135(5), Florida Statutes,
2) Contractor is found to have been placed on the Scrutinized Companies with Activities in Sudan List or the Scrutinized Companies with Activities in the Iran Petroleum Energy Sector List, or is or has been engaged in Business operations in Cuba or Syria or a Boycott of Israel, or
3) Contractor is found to have been placed on a list created pursuant to section 215.473, Florida Statutes, relating to scrutinized active business operations in Iran.

Such termination shall be in addition to any and all remedies available to the City of Largo at law or in equity. The terms “Boycott of Israel” and “Business operations” used in this section are defined as in Section 287.135, Florida Statutes. The Lists referred to in this section are those Lists in and maintained pursuant to section 287.135, Florida Statutes.

Proposer (Authorized Signature): _____ Date: _____

Representative Name & Title (typed or printed): _____

NON-COLLUSIVE AFFIDAVIT

STATE OF FLORIDA)
)SS
COUNTY OF)
_____)

_____ , being first duly sworn, deposes and says that:

1) He is _____ of _____ , the Bidder that has submitted the attached Bid;

2) He is fully informed respecting the preparation and contents of the attached Bid and of all pertinent circumstances respecting such Bid;

3) Such Bid is genuine and is not a collusive or sham Bid;

4) Neither the said Bidder nor any of its officers, partners, owners, agents, representative, employees or parties in interest, including this affidavit, have in any way colluded, conspired, connived or agreed, directly or indirectly, with any other Bidder, firm or person to submit a collusive or sham Bid in connection with the Contract for which the attached Bid has been submitted; or to refrain from bidding in connection with such Contract; or have in any manner, directly or indirectly, sought by agreement or collusion, or communications, or conference with any Bidder, firm, or person to fix the price or prices in the attached Bid or any other Bidder, or to fix any overhead, profit, or cost element of the Bid Price or the Bid Price of any other Bidder, or to secure through any collusion conspiracy, connivance, or unlawful agreement any advantage against the City of Largo, or any person interested in the proposed Contract; and

5) The price of items quoted in the attached Bid are fair and proper and are not tainted by collusion, conspiracy, connivance, or unlawful agreement on the part of the Bidder or any other of its agents, representatives, owners, employees or parties in interest, including this affidavit.

(Signed)

(Title)

Subscribed and sworn to before me

this ___ day of _____ , 20

Notary Public

My Commission Expires:

DRUG FREE WORKPLACE CERTIFICATION

IDENTICAL TIE BIDS: Preference shall be given to businesses with drug-free workplace programs. Whenever two or more bids which are equal with respect to price, quantity, and service are received by the State or by any political subdivision for the procurement of commodities or contractual services, a bid received from a business that certifies that it has implemented a drug-free workplace program shall be given preference in the award process. Established procedures for processing tie bids will be followed if none of the tied vendors have a drug-free workplace program (Florida Statutes Section 287.087). In order to have a drug-free workplace program, a business shall:

1. Publish a statement notifying employees that the unlawful manufacture, distribution, dispensing, possession, or use of a controlled substance is prohibited in the workplace and specifying the actions that will be taken against employees for violations of such prohibition.
2. Inform employees about the dangers of drug abuse in the workplace, the business's policy of maintaining a drug-free workplace, and available drug counseling, rehabilitation, and employee assistance programs, and the penalties that may be imposed upon employees for drug abuse violations.
3. Give each employee engaged in providing the commodities or contractual services that are under bid a copy of the statement specified in subsection (1).
4. In the statement specified in subsection (1), notify the employees that, as a condition of working on the commodities or contractual services that are under bid, the employee will abide by the terms of the statement and will notify the employer of any conviction of, or plea of guilty or nolo contendere to, any violation of Chapter 893 or of any controlled substance law of the United States or any state, for a violation occurring in the workplace no later than five (5) days after such conviction.
5. Impose a sanction on, or require the satisfactory participation in a drug abuse assistance or rehabilitation program if such is available in the employee's community, by any employee who is so convicted.
6. Make a good faith effort to continue to maintain a drug-free workplace through implementation of this section.

As the person authorized to sign the statement, I certify that this firm complies fully with the above requirements.

_____
Signature of Bidder

_____
(Print or type)

TRENCH SAFETY ACT

Florida Statutes Section 553.60 et seq.

"Trench Safety Act" Compliance

Bidder acknowledges that the Florida Trench Safety Act, Section 553.60 et. seq., which became effective October 1, 1990, shall be in effect during the period of construction of the project. The Bidder by signing and submitting the bid is, in writing, assuring that it will perform any trench excavation in accordance with the applicable trench safety standards. The Bidder further identifies the following separate item of cost of compliance with the applicable trench safety standards as well as the method of compliance.

Method of Compliance	Cost

Bidder acknowledges that this cost is included in the applicable items of the Proposal and in the Grand Total Bid Price. Failure to complete the above may result in the bid being declared non-responsive.

The Bidder is, and the Owner and Engineer are not, responsible to review or assess City's safety precautions, programs or costs, or the means, methods, techniques or technique adequacy, reasonableness of cost, sequences or procedures of any safety precaution, program or cost, including but not limited to, compliance with any and all requirements of Florida Statute Section 553.60 et. seq. cited as the "Trench Safety Act". Bidder is, and the City and Engineer are not, responsible to determine if any safety or safety related standards apply to the project, including, but not limited to, the "Trench Safety Act".

_____

Signature of Bidder

_____

(Print or type)

AFFIDAVIT

Before me, a notary public, in and for the State of Florida – at large, personally appeared,_____ , and having first made due oath or affirmation, states:
(Write Name Here)

1. My name is _____
(Write Name Here)
2. I am the _____ of _____
(Insert Job Title) (Insert Company Name)
3. The Company was formed in _____ and is a _____
(Country and State) (List the Type of Entity (ex.: LLC, Inc., etc.)
4. I am duly authorized and empowered and have sufficient knowledge to execute and deliver this Affidavit.
5. I affirm that the Company is not:
    a. Owned or controlled by the government of the People's Republic of China, the Russian Federation, the Islamic Republic of Iran, the Democratic People's Republic of Korea, the Republic of Cuba, the Venezuelan regime of Nicolás Maduro, or the Syrian Arab Republic (collectively and individually, a Foreign Country of Concern), including any agency of or any other entity of significant control of such Foreign Country of Concern. Where 'controlled by' means *having possession of the power to direct or cause the direction of the management or policies of a company, whether through ownership of securities, by contract, or otherwise; or a person or entity that directly or indirectly has the right to vote 25 percent or more of the voting interests of the company or that is entitled to 25 percent or more of its profits is presumed to control the foreign entity;* or
    b. A partnership, association, corporation, organization, or other combination of persons organized under the laws of or having its principal place of business in a Foreign Country of Concern, or a subsidiary of such entity.

Under penalties of perjury, I declare that I have read the foregoing Affidavit and that the facts stated in it are true.

_____
(Signature of Affiant)

The foregoing instrument was acknowledged before me this ___ day of ____,
(Insert Day) (Insert Month)
_____ , by_____ .
(Insert Year) (Insert Name of Affiant)

Personally known_____
OR Produced Identification_____
Type of Identification Provided_____

_____
PRINT, TYPE OR STAMP NAME OF NOTARY

EXHIBIT A – CONTRACTOR'S BID
(to be inserted)

EXHIBIT B – INSURANCE CERTIFICATES
(to be inserted)

AGREEMENT
BETWEEN OWNER AND CONTRACTOR
FOR CONSTRUCTION CONTRACT (STIPULATED PRICE)

THIS AGREEMENT is by and between **City of Largo** ("Owner") and

("Contractor").

Owner and Contractor hereby agree as follows:

ARTICLE 1 – WORK

1.01 Contractor shall complete all Work as specified or indicated in the Contract Documents. The Work is generally described as follows: **the rehabilitation of pipelines and conduits (8 inch through 84 inch, and laterals) by various trenchless methods on an "as needed" basis. The trenchless pipe rehabilitation work includes wastewater and stormwater pipe cleaning, inspection, grouting, and lining services. These rehabilitation methods may be used in a variety of gravity and pressure applications such as sanitary sewers, storm sewers, and force mains.**

This Work shall be assigned on a Task Order basis.

ARTICLE 2 – THE PROJECT

2.01 The Project, of which the Work under the Contract Documents is a part, is generally described as follows: **Trenchless Sanitary and Storm Sewer Rehabilitation Services Contract No. 24-B-806.**

ARTICLE 3 – ENGINEER

3.01 The part of the Project that pertains to the Work has been designed by the **City of Largo.**

3.02 Reference to ENGINEER in the Contract Documents shall be the OWNER, City of Largo Engineering Services Department. The OWNER will assume all duties and responsibilities, and will have the rights and authority assigned to Engineer in the Contract Documents in connection with the completion of the Work in accordance with the Contract Documents.

ARTICLE 4 – CONTRACT TIMES

4.01 *Time of the Essence*

A. All time limits for Milestones, if any, Substantial Completion, and completion and readiness for final payment as stated in the Contract Documents are of the essence of the Contract.

4.02 *Contract Times: Days*

A. The Work for each Task Order will be substantially completed within the amount of time set forth in each respective Task Order for substantial completion, after the Contract Times commence to run as provided in the respective Task Order. The Work will be completed and ready for final payment in accordance with Paragraph 15.06 of the General Conditions within the amount of time set forth in each respective Task Order for final completion, after the Contract Times commence to run as provided in the respective Task Order.

Copyright © 2013 National Society of Professional Engineers, American Council of Engineering Companies, and American Society of Civil Engineers. All rights reserved.

4.03 *Liquidated Damages*

A. Contractor and Owner recognize that time is of the essence as stated in Paragraph 4.01 above and that Owner will suffer financial and other losses if the Work is not completed and Milestones not achieved within the times specified in Paragraph 4.02 above, plus any extensions thereof allowed in accordance with the Contract. The parties also recognize the delays, expense, and difficulties involved in proving in a legal or arbitration proceeding the actual loss suffered by Owner if the Work is not completed on time. Accordingly, instead of requiring any such proof, Owner and Contractor agree that as liquidated damages for delay (but not as a penalty):

1. Substantial Completion: Contractor shall pay Owner $500 for each day that expires after the time (as duly adjusted pursuant to the Contract) specified in Paragraph 4.02.A above for Substantial Completion until the Work is substantially complete.

2. Completion of Remaining Work: After Substantial Completion, if Contractor shall neglect, refuse, or fail to complete the remaining Work within the Contract Times (as duly adjusted pursuant to the Contract) for completion and readiness for final payment, Contractor shall pay Owner $500 for each day that expires after such time until the Work is completed and ready for final payment.

3. Liquidated damages for failing to timely attain Substantial Completion and final completion are not additive and will not be imposed concurrently.

ARTICLE 5 – CONTRACT PRICE

5.01 Owner shall pay Contractor for completion of the Work in accordance with the Contract Documents the amounts that follow, subject to adjustment under the Contract:

A. For all Unit Price Work, an amount equal to the sum of the extended prices (established for each separately identified item of Unit Price Work by multiplying the unit price times the actual quantity of that item):

REMAINDER OF PAGE INTENTIONALLY LEFT BLANK

Copyright © 2013 National Society of Professional Engineers, American Council of Engineering Companies, and American Society of Civil Engineers. All rights reserved.

The extended prices for Unit Price Work set forth as of the Effective Date of the Contract are based on estimated quantities. As provided in Paragraph 13.03 of the General Conditions, estimated quantities are not guaranteed, and determinations of actual quantities and classifications are to be made by Owner.

ARTICLE 6 – PAYMENT PROCEDURES

6.01 *Submittal and Processing of Payments*

A. Contractor shall submit Applications for Payment in accordance with Article 15 of the General Conditions. Applications for Payment Shall be submitted to Norm Shaw, City of Largo Construction Manager, by the last calendar day of the month. Applications for Payment will be processed by Qwner as provided in the General Conditions. All payments shall be applied for and paid in accordance with the Florida Prompt Payment Act, as set forth in chapter 218, Florida Statutes.

6.02 *Progress Payments; Retainage*

A. Owner shall make progress payments on account of the Task Order Price on the basis of Contractor's Applications for Payment in accordance with section 218.735, Florida Statutes (2018), during performance of the Work as provided in Paragraph 6.02.A.1 below, provided that such Applications for Payment have been submitted in a timely manner and otherwise meet the requirements of the Contract. All such payments will be measured by the Schedule of Values established as provided in the General Conditions (and in the case of Unit Price Work based on the number of units completed) or, in the event there is no Schedule of Values, as provided elsewhere in the Contract.

1. Prior to Substantial Completion, progress payments will be made in an amount equal to the percentage indicated below but, in each case, less the aggregate of payments previously made and less such amounts as Owner may withhold, including but not limited to liquidated damages, in accordance with the Contract

a. **95** percent of Work completed (with the balance being retainage) for the duration of the Project.

b. Upon Substantial Completion, Contractor may request release of retainage, which will not be unreasonably withheld by the Owner.

6.03 *Final Payment*

A. Upon final completion and acceptance of the Work in accordance with Paragraph 15.06 of the General Conditions, Owner shall pay the remainder of the Task Order Price as recommended by OSR as provided in said Paragraph 15.06.

ARTICLE 7 – INTEREST

7.01 All amounts not paid when due shall bear interest at the rate of one percent per annum.

ARTICLE 8 – CONTRACTOR'S REPRESENTATIONS

8.01 In order to induce Owner to enter into this Contract, Contractor makes the following representations:

A. Contractor has examined and carefully studied the Contract Documents, and any data and reference items identified in the Contract Documents.

Copyright © 2013 National Society of Professional Engineers, American Council of Engineering Companies, and American Society of Civil Engineers. All rights reserved.

B. For each Task Order, Contractor shall visit the Site, conduct a thorough, alert visual examination of the Site and adjacent areas, and become familiar with and satisfied as to the general, local, and Site conditions that may affect cost, progress, and performance of the Work.

C. Contractor is familiar with and is satisfied as to all Laws and Regulations that may affect cost, progress, and performance of the Work.

D. For each Task Order, Contractor shall carefully study all: (1) reports of explorations and tests of subsurface conditions at or adjacent to the Site and all drawings of physical conditions relating to existing surface or subsurface structures at the Site that have been identified in the Supplementary Conditions, especially with respect to Technical Data in such reports and drawings, and (2) reports and drawings relating to Hazardous Environmental Conditions, if any, at or adjacent to the Site that have been identified in the Supplementary Conditions, especially with respect to Technical Data in such reports and drawings.

E. For each Task Order, Contractor shall consider the information known to Contractor itself; information commonly known to contractors doing business in the locality of the Site; information and observations obtained from visits to the Site; the Contract Documents; and the Site-related reports and drawings identified in the Contract Documents, with respect to the effect of such information, observations, and documents on (1) the cost, progress, and performance of the Work; (2) the means, methods, techniques, sequences, and procedures of construction to be employed by Contractor; and (3) Contractor's safety precautions and programs.

F. Based on the information and observations referred to in the preceding paragraph, Contractor shall satisfy itself that no further examinations, investigations, explorations, tests, studies, or data are necessary for the performance of the Work at the Contract Price, within the Contract Times, and in accordance with the other terms and conditions of the Contract.

G. For each Task Order, Contractor shall be aware of the general nature of work to be performed by Owner and others at the Site that relates to the Work as indicated in the Contract Documents.

H. Contractor has given Owner written notice of all conflicts, errors, ambiguities, or discrepancies that Contractor has discovered in the Contract Documents, and the written resolution thereof by Owner is acceptable to Contractor.

I. The Contract Documents are generally sufficient to indicate and convey understanding of all terms and conditions for performance and furnishing of the Work.

J. Contractor's entry into this Contract constitutes an incontrovertible representation by Contractor that without exception all prices in the Agreement are premised upon performing and furnishing the Work required by the Contract Documents.

ARTICLE 9 – CONTRACT DOCUMENTS

9.01 *Contents*

A. The Contract Documents consist of the following:

1. This Agreement.

2. General Conditions.

Copyright © 2013 National Society of Professional Engineers, American Council of Engineering Companies, and American Society of Civil Engineers. All rights reserved.

3. Supplementary Conditions.

4. Specifications as listed in the table of contents of the Project Manual.

5. Addenda.

6. Exhibits to this Agreement (enumerated as follows):

   a. Contractor's Bid.

   b. Insurance Certificates.

7. The following which may be delivered or issued on or after the Effective Date of the Contract and are not attached hereto:

   a. Task Orders.

   b. Work Change Directives.

   c. Change Orders.

   d. Field Orders.

B. There are no Contract Documents other than those listed above in this Article 9.

C. The Contract Documents may only be amended, modified, or supplemented as provided in the General Conditions. In interpreting this Agreement and resolving any ambiguities or conflicts amongst the Contract Documents, this Agreement takes precedence over the other Contract Documents and any inconsistency between remaining Contract Documents will be resolved in the following order:

1. Specifications

2. Addenda

3. Supplementary Conditions

4. General Conditions

ARTICLE 10 – MISCELLANEOUS

10.01 *Terms*

A. Terms used in this Agreement will have the meanings stated in the General Conditions and the Supplementary Conditions.

10.02 *Assignment of Contract*

A. Unless expressly agreed to elsewhere in the Contract, no assignment by a party hereto of any rights under or interests in the Contract will be binding on another party hereto without the written consent of the party sought to be bound; and, specifically but without limitation, money that may become due and money that is due may not be assigned without such consent (except to the extent that the effect of this restriction may be limited by law), and unless specifically stated to the contrary in any written consent to an assignment, no assignment will release or discharge the assignor from any duty or responsibility under the Contract Documents.

10.03 *Successors and Assigns*

A. Owner and Contractor each binds itself, its successors, assigns, and legal representatives to the other party hereto, its successors, assigns, and legal representatives in respect to all covenants, agreements, and obligations contained in the Contract Documents.

Copyright © 2013 National Society of Professional Engineers, American Council of Engineering Companies, and American Society of Civil Engineers. All rights reserved.

10.04 *Severability*

A. Any provision or part of the Contract Documents held to be void or unenforceable under any Law or Regulation shall be deemed stricken, and all remaining provisions shall continue to be valid and binding upon Owner and Contractor, who agree that the Contract Documents shall be reformed to replace such stricken provision or part thereof with a valid and enforceable provision that comes as close as possible to expressing the intention of the stricken provision.

10.05 *Contractor's Certifications*

A. Contractor certifies that it has not engaged in corrupt, fraudulent, collusive, or coercive practices in competing for or in executing the Contract. For the purposes of this Paragraph 10.05:

1. "corrupt practice" means the offering, giving, receiving, or soliciting of any thing of value likely to influence the action of a public official in the bidding process or in the Contract execution;

2. "fraudulent practice" means an intentional misrepresentation of facts made (a) to influence the bidding process or the execution of the Contract to the detriment of Owner, (b) to establish Bid or Contract prices at artificial non-competitive levels, or (c) to deprive Owner of the benefits of free and open competition;

3. "collusive practice" means a scheme or arrangement between two or more Bidders, with or without the knowledge of Owner, a purpose of which is to establish Bid prices at artificial, non-competitive levels; and

4. "coercive practice" means harming or threatening to harm, directly or indirectly, persons or their property to influence their participation in the bidding process or affect the execution of the Contract.

10.06 *Other Provisions*

A. Owner stipulates that if the General Conditions that are made a part of this Contract are based on EJCDC® C-700, Standard General Conditions for the Construction Contract, published by the Engineers Joint Contract Documents Committee®, and if Owner is the party that has furnished said General Conditions, then Owner has plainly shown all modifications to the standard wording of such published document to the Contractor, through a process such as highlighting or "track changes" (redline/strikeout), or in the Supplementary Conditions.

Copyright © 2013 National Society of Professional Engineers, American Council of Engineering Companies, and American Society of Civil Engineers. All rights reserved.

IN WITNESS WHEREOF, Owner and Contractor have signed this Agreement.

This Agreement will be effective on _____ (which is the Effective Date of the Contract).

OWNER:	CONTRACTOR:
City of Largo	
By:	By:
Title:	Title:
	(If Contractor is a corporation, a partnership, or a joint venture, attach evidence of authority to sign.)
Attest:	Attest:
Title:	Title:

Risk Manager

Reviewed and Approved:

City Attorney

Address for giving notices:	Address for giving notices:
John Curp, City Manager	
201 Highland Avenue NE	
Largo, FL 33770	

With required copy to:
Alan S. Zimmet, Esq.
Bryant Miller Olive, P.A.
One Tampa City Center, Suite 2700
Tampa, Florida 33602

License No.: _____
(where applicable)

Copyright © 2013 National Society of Professional Engineers, American Council of Engineering Companies, and American Society of Civil Engineers. All rights reserved.

GENERAL CONDITIONS
OF THE CONSTRUCTION CONTRACT

ARTICLE 1 – Definitions and Terminology 1

ARTICLE 2 – Preliminary Matters 5

ARTICLE 3 – Documents: Intent, Requirements, Reuse 7

ARTICLE 4 – Commencement and Progress of the Work 9

ARTICLE 5 – Availability of Lands; Subsurface and Physical Conditions; Hazardous Environmental Conditions 10

ARTICLE 6 – Bonds and Insurance 16

ARTICLE 7 – Contractor's Responsibilities 22

ARTICLE 8 – Other Work at the Site 32

ARTICLE 9 – Owner's Responsibilities 34

ARTICLE 10 – Engineer's Status During Construction 35

ARTICLE 11 – Amending the Contract Documents; Changes in the Work 36

ARTICLE 12 – Claims 40

ARTICLE 13 – Cost of the Work; Allowances; Unit Price Work 41

ARTICLE 14 – Tests and Inspections; Correction, Removal or Acceptance of Defective Work 44

ARTICLE 15 – Payments to Contractor; Set-Offs; Completion; Correction Period 47

ARTICLE 16 – Suspension of Work and Termination 53

ARTICLE 17 – Final Resolution of Disputes 55

ARTICLE 18 – Miscellaneous 55

ARTICLE 1 – DEFINITIONS AND TERMINOLOGY

1.01 *Defined Terms*

A. Wherever used in the Bidding Requirements or Contract Documents, a term printed with initial capital letters, including the term's singular and plural forms, will have the meaning indicated in the definitions below. In addition to terms specifically defined, terms with initial capital letters in the Contract Documents include references to identified articles and paragraphs, and the titles of other documents or forms.

1. *Addenda*—Written or graphic instruments issued prior to the opening of Bids which clarify, correct, or change the Bidding Requirements or the proposed Contract Documents.

2. *Agreement*—The written instrument, executed by Owner and Contractor, that sets forth the Contract Price and Contract Times, identifies the parties and the Engineer, and designates the specific items that are Contract Documents.

3. *Application for Payment*—The form acceptable to Engineer which is to be used by Contractor during the course of the Work in requesting progress or final payments and which is to be accompanied by such supporting documentation as is required by the Contract Documents.

4. *Bid*—The offer of a Bidder submitted on the prescribed form setting forth the prices for the Work to be performed.

5. *Bidder*—An individual or entity that submits a Bid to Owner.

6. *Bidding Documents*—The Bidding Requirements, the proposed Contract Documents, and all Addenda.

7. *Bidding Requirements*—The advertisement or invitation to bid, Instructions to Bidders, Bid Bond or other Bid security, if any, the Bid Form, and the Bid with any attachments.

8. *Change Order*—A document which is signed by Contractor and Owner and authorizes an addition, deletion, or revision in the Work or an adjustment in the Contract Price or the Contract Times, or other revision to the Contract, issued on or after the Effective Date of the Contract.

9. *Change Proposal*—A written request by Contractor, duly submitted in compliance with the procedural requirements set forth herein, seeking an adjustment in Contract Price or Contract Times, or both; contesting an initial decision by Engineer concerning the requirements of the Contract Documents or the acceptability of Work under the Contract Documents; challenging a set-off against payments due; or seeking

other relief with respect to the terms of the Contract.

10. *Claim*—(a) A demand or assertion by Owner directly to Contractor, duly submitted in compliance with the procedural requirements set forth herein: seeking an adjustment of Contract Price or Contract Times, or both; contesting an initial decision by Engineer concerning the requirements of the Contract Documents or the acceptability of Work under the Contract Documents; contesting Engineer's decision regarding a Change Proposal; seeking resolution of a contractual issue that Engineer has declined to address; or seeking other relief with respect to the terms of the Contract; or (b) a demand or assertion by Contractor directly to Owner, duly submitted in compliance with the procedural requirements set forth herein, contesting Engineer's decision regarding a Change Proposal; or seeking resolution of a contractual issue that Engineer has declined to address. A demand for money or services by a third party is not a Claim.

11. *Constituent of Concern*—Asbestos, petroleum, radioactive materials, polychlorinated biphenyls (PCBs), hazardous waste, and any substance, product, waste, or other material of any nature whatsoever that is or becomes listed, regulated, or addressed pursuant to (a) the Comprehensive Environmental Response, Compensation and Liability Act, 42 U.S.C. §§9601 et seq. ("CERCLA"); (b) the Hazardous Materials Transportation Act, 49 U.S.C. §§5101 et seq.; (c) the Resource Conservation and Recovery Act, 42 U.S.C. §§6901 et seq. ("RCRA"); (d) the Toxic Substances Control Act, 15 U.S.C. §§2601 et seq.; (e) the Clean Water Act, 33 U.S.C. §§1251 et seq.; (f) the Clean Air Act, 42 U.S.C. §§7401 et seq.; or (g) any other federal, state, or local statute, law, rule, regulation, ordinance, resolution, code, order, or decree regulating, relating to, or imposing liability or standards of conduct concerning, any hazardous, toxic, or dangerous waste, substance, or material.

12. *Contract*—The entire and integrated written contract between the Owner and Contractor concerning the Work.

13. *Contract Documents*—Those items so designated in the Agreement, and which together comprise the Contract.

14. *Contract Price*—The money that Owner has agreed to pay Contractor for completion of the Work in accordance with the Contract Documents. .

15. *Contract Times*—The number of days or the dates by which Contractor shall: (a) achieve Milestones, if any; (b) achieve Substantial Completion; and (c) complete the Work.

16. *Contractor*—The individual or entity with which Owner has contracted for performance of the Work.

17. *Cost of the Work*—See Paragraph 13.01 for definition.

18. *Drawings*—The part of the Contract that graphically shows the scope, extent, and character of the Work to be performed by Contractor.

19. *Effective Date of the Contract*—The date, indicated in the Agreement, on which the Contract becomes effective.

20. *Engineer*—The individual or entity named as such in the Agreement.

21. *Field Order*—A written order issued by Engineer which requires minor changes in the Work but does not change the Contract Price or the Contract Times.

22. *Hazardous Environmental Condition*—The presence at the Site of Constituents of Concern in such quantities or circumstances that may present a danger to persons or property exposed thereto. The presence at the Site of materials that are necessary for the execution of the Work, or that are to be incorporated in the Work, and that are controlled and contained pursuant to industry practices, Laws and Regulations, and the requirements of the Contract, does not establish a Hazardous Environmental Condition.

23. *Laws and Regulations; Laws or Regulations*—Any and all applicable laws, statutes, rules, regulations, ordinances, codes, and orders of any and all governmental bodies, agencies, authorities, and courts having jurisdiction.

24. *Liens*—Charges, security interests, or encumbrances upon Contract-related funds, real property, or personal property. Liens are prohibited on Owner's real property.

25. *Milestone*—A principal event in the performance of the Work that the Contract requires Contractor to achieve by an intermediate completion date or by a time prior to Substantial Completion of all the Work.

26. *Notice of Award*—The written notice by Owner to a Bidder of Owner's acceptance of the Bid.

27. *Notice to Proceed*—A written notice by Owner to Contractor fixing the date on which the Contract Times will commence to run and on which Contractor shall start to perform the Work.

28. *Owner*—The individual or entity with which Contractor has contracted regarding the Work, and which has agreed to pay Contractor for the performance of the Work, pursuant to the terms of the Contract.

29. *Progress Schedule*—A schedule, prepared and maintained by Contractor, describing the sequence and duration of the activities comprising the Contractor's plan to accomplish the Work within the Contract Times.

30. *Project*—The total undertaking to be accomplished for Owner by engineers, contractors, and others, including planning, study, design, construction, testing, commissioning, and start-up, and of which the Work to be performed under the Contract Documents is a part.

31. *Project Manual*—The written documents prepared for, or made available for, procuring and constructing the Work, including but not limited to the Bidding Documents or other construction procurement documents, geotechnical and existing conditions information, the Agreement, bond forms, General Conditions, Supplementary Conditions, and Specifications. The contents of the Project Manual may be bound in one or more volumes.

32. *Resident Project Representative*—The authorized representative of Engineer assigned to assist Engineer and Owner at the Site. As used herein, the term Resident Project Representative or "RPR" includes any assistants or field staff of Resident Project Representative.

33. *Samples*—Physical examples of materials, equipment, or workmanship that are representative of some portion of the Work and that establish the standards by which such portion of the Work will be judged.

34. *Schedule of Submittals*—A schedule, prepared and maintained by Contractor, of required submittals and the time requirements for Engineer's review of the submittals and the performance of related construction activities.

35. *Schedule of Values*—A schedule, prepared and maintained by Contractor, allocating portions of the Contract Price to various portions of the Work and used as the basis for reviewing Contractor's Applications for Payment.

36. *Shop Drawings*—All drawings, diagrams, illustrations, schedules, and other data or information that are specifically prepared or assembled by or for Contractor and submitted by Contractor to illustrate some portion of the Work. Shop Drawings, whether approved or not, are not Drawings and are not Contract Documents.

37. *Site*—Lands or areas indicated in the Contract Documents as being furnished by Owner upon which the Work is to be performed, including rights-of-way and easements, and such other lands furnished by Owner which are designated for the use of Contractor.

38. *Specifications*—The part of the Contract that consists of written requirements for materials, equipment, systems, standards, and workmanship as applied to the Work, and certain administrative requirements and procedural matters applicable to the Work.

39. *Subcontractor*—An individual or entity having a direct contract with Contractor or with any other Subcontractor for the performance of a part of the Work.

40. *Substantial Completion*—The time at which the Work (or a specified part thereof) has progressed to the point where, in the opinion of Engineer, the Work (or a specified part thereof) is sufficiently complete, in accordance with the Contract Documents, so that the Work (or a specified part thereof) can be utilized for the purposes for which it is intended. The terms "substantially complete" and "substantially completed" as applied to all or part of the Work refer to Substantial Completion thereof.

41. *Successful Bidder*—The Bidder whose Bid the Owner accepts, and to which the Owner makes an award of contract, subject to stated conditions.

42. *Supplementary Conditions*—The part of the Contract that amends or supplements these General Conditions.

43. *Supplier*—A manufacturer, fabricator, supplier, distributor, materialman, or vendor having a direct contract with Contractor or with any Subcontractor to furnish materials or equipment to be incorporated in the Work by Contractor or a Subcontractor.

44. *Technical Data*—Those items expressly identified as Technical Data in the Supplementary Conditions, with respect to either (a) subsurface conditions at the Site, or physical conditions relating to existing surface or subsurface structures at the Site (except Underground Facilities) or (b) Hazardous Environmental Conditions at the Site. If no such express identifications of Technical Data have been made with respect to conditions at the Site, then the data contained in boring logs, recorded measurements of subsurface water levels, laboratory test results, and other factual, objective information regarding conditions at the Site that are set forth in any geotechnical or environmental report prepared for the Project and made available to Contractor are hereby defined as Technical Data with respect to conditions at the Site under Paragraphs 5.03, 5.04, and 5.06.

45. *Underground Facilities*—All underground pipelines, conduits, ducts, cables, wires, manholes, vaults, tanks, tunnels, or other such facilities or attachments, and any encasements containing such facilities, including but not limited to those that convey electricity, gases, steam, liquid petroleum products, telephone or other communications, fiber optic transmissions, cable television, water, wastewater, storm water, other liquids or chemicals, or traffic or other control systems.

46. *Unit Price Work*—Work to be paid for on the basis of unit prices.

47. *Work*—The entire construction or the various separately identifiable parts thereof required to be provided under the Contract Documents. Work includes and is the result of performing or providing all labor, services, and documentation necessary to produce such construction; furnishing, installing, and incorporating all materials and equipment into such construction; and may include related services such as testing, start-up, and commissioning, all as required by the Contract Documents.

48. *Work Change Directive*—A written directive to Contractor issued on or after the Effective Date of the Contract, signed by Owner and recommended by Engineer, ordering an addition, deletion, or revision in the Work.

1.02 *Terminology*

A. The words and terms discussed in the following paragraphs are not defined but, when used in

the Bidding Requirements or Contract Documents, have the indicated meaning.

B. *Intent of Certain Terms or Adjectives*:

1. The Contract Documents include the terms "as allowed," "as approved," "as ordered," "as directed" or terms of like effect or import to authorize an exercise of professional judgment by Engineer. In addition, the adjectives "reasonable," "suitable," "acceptable," "proper," "satisfactory," or adjectives of like effect or import are used to describe an action or determination of Engineer as to the Work. It is intended that such exercise of professional judgment, action, or determination will be solely to evaluate, in general, the Work for compliance with the information in the Contract Documents and with the design concept of the Project as a functioning whole as shown or indicated in the Contract Documents (unless there is a specific statement indicating otherwise). The use of any such term or adjective is not intended to and shall not be effective to assign to Engineer any duty or authority to supervise or direct the performance of the Work, or any duty or authority to undertake responsibility contrary to the provisions of Article 10 or any other provision of the Contract Documents.

C. *Day*:

1. The word "day" means a calendar day of 24 hours measured from midnight to the next midnight.

D. *Defective*:

1. The word "defective," when modifying the word "Work," refers to Work that is unsatisfactory, faulty, or deficient in that it:

a. does not conform to the Contract Documents; or

b. does not meet the requirements of any applicable inspection, reference standard, test, or approval referred to in the Contract Documents; or

c. has been damaged prior to Engineer's recommendation of final payment (unless responsibility for the protection thereof has been assumed by Owner at Substantial Completion in accordance with Paragraph 15.03 or 15.04).

E. *Furnish, Install, Perform, Provide*:

1. The word "furnish," when used in connection with services, materials, or equipment, shall mean to supply and deliver said services, materials, or equipment to the Site (or some other specified location) ready for use or installation and in usable or operable condition.

2. The word "install," when used in connection with services, materials, or equipment, shall mean to put into use or place in final position said services, materials, or equipment complete and ready for intended use.

3. The words "perform" or "provide," when used in connection with services, materials, or equipment, shall mean to furnish and install said services, materials, or equipment complete and ready for intended use.

4. If the Contract Documents establish an obligation of Contractor with respect to specific services, materials, or equipment, but do not expressly use any of the four words "furnish," "install," "perform," or "provide," then Contractor shall furnish and install said services, materials, or equipment complete and ready for intended use.

F. Unless stated otherwise in the Contract Documents, words or phrases that have a well-known technical or construction industry or trade meaning are used in the Contract Documents in accordance with such recognized meaning.

ARTICLE 2 – PRELIMINARY MATTERS

2.01 *Delivery of Bonds and Evidence of Insurance*

A. *Bonds*: When Contractor delivers the executed counterparts of the Agreement to Owner, Contractor shall also deliver to Owner such bonds as Contractor may be required to furnish.

B. *Evidence of Contractor's Insurance*: When Contractor delivers the executed counterparts of the Agreement to Owner, Contractor shall also deliver to Owner, with copies to each named insured and additional insured (as identified in the Supplementary Conditions or elsewhere in the Contract), the certificates and other evidence of insurance required to be provided by Contractor in accordance with Article 6.

C. *Evidence of Owner's Insurance*: [Deleted.]

2.02 *Copies of Documents*

A. Owner shall furnish to Contractor four printed copies of the Contract (including one fully executed counterpart of the Agreement), and one copy in electronic portable document format (PDF). Additional printed copies will be furnished upon request at the cost of reproduction.

B. Owner shall maintain and safeguard at least one original printed record version of the Contract, including Drawings and Specifications signed and sealed by Engineer and other design professionals. Owner shall make such original printed record version of the Contract available to Contractor for review. Owner may delegate the responsibilities under this provision to Engineer.

2.03 *Before Starting Construction*

A. *Preliminary Schedules*: Within 10 days after the Effective Date of the Contract (or as otherwise specifically required by the Contract Documents), Contractor shall submit to Engineer for timely review:

1. a preliminary Progress Schedule indicating the times (numbers of days or dates) for starting and completing the various stages of the Work, including any Milestones specified in the Contract;

2. a preliminary Schedule of Submittals; and

3. a preliminary Schedule of Values for all of the Work which includes quantities and prices of items which when added together equal the Contract Price and subdivides the Work into component parts in sufficient detail to serve as the basis for progress payments during performance of the Work. Such prices will include an appropriate amount of overhead and profit applicable to each item of Work.

2.04 *Preconstruction Conference; Designation of Authorized Representatives*

A. Before any Work at the Site is started, a conference attended by Owner, Contractor, Engineer, and others as appropriate will be held to establish a working understanding among the parties as to the Work and to discuss the schedules referred to in Paragraph 2.03.A, procedures for handling Shop Drawings, Samples, and other submittals, processing Applications for Payment, electronic or digital transmittals, and maintaining required records.

B. At this conference Owner and Contractor each shall designate, in writing, a specific individual to act as its authorized representative with respect to the services and responsibilities under the Contract. Such individuals shall have the authority to transmit and receive information, render decisions relative to the Contract, and otherwise act on behalf of each respective party; provided, however, that the Owner's representative will not have the authority to approve a Change Proposal, execute a Change Order without City Commission approval, or otherwise agree to a change in the Contract Price or the Contract Times.

2.05 *Initial Acceptance of Schedules*

A. At least 10 days before submission of the first Application for Payment a conference, attended by Contractor, Engineer, and others as appropriate, will be held to review for acceptability to Engineer as provided below the schedules submitted in accordance with Paragraph 2.03.A. Contractor shall have an additional 10 days to make corrections and adjustments and to complete and resubmit the schedules. No progress payment shall be made to Contractor until acceptable schedules are submitted to Engineer.

1. The Progress Schedule will be acceptable to Engineer if it provides an orderly progression of the Work to completion within the Contract Times. Such acceptance will not impose on Engineer responsibility for the Progress Schedule, for sequencing, scheduling, or progress of the Work, nor

interfere with or relieve Contractor from Contractor's full responsibility therefor.

2. Contractor's Schedule of Submittals will be acceptable to Engineer if it provides a workable arrangement for reviewing and processing the required submittals.

3. Contractor's Schedule of Values will be acceptable to Engineer as to form and substance if it provides a reasonable allocation of the Contract Price to the component parts of the Work.

2.06 *Electronic Transmittals*

A. Except as otherwise stated elsewhere in the Contract, the Owner, Engineer, and Contractor may transmit, and shall accept, Project-related correspondence, text, data, documents, drawings, information, and graphics, including but not limited to Shop Drawings and other submittals, in electronic media or digital format, either directly, or through access to a secure Project website.

B. If the Contract does not establish protocols for electronic or digital transmittals, then Owner, Engineer, and Contractor shall jointly develop such protocols.

C. When transmitting items in electronic media or digital format, the transmitting party makes no representations as to long term compatibility, usability, or readability of the items resulting from the recipient's use of software application packages, operating systems, or computer hardware differing from those used in the drafting or transmittal of the items, or from those established in applicable transmittal protocols.

ARTICLE 3 – DOCUMENTS: INTENT, REQUIREMENTS, REUSE

3.01 *Intent*

A. The Contract Documents are complementary; what is required by one is as binding as if required by all.

B. It is the intent of the Contract Documents to describe a functionally complete project (or part thereof) to be constructed in accordance with the Contract Documents.

C. Unless otherwise stated in the Contract Documents, if there is a discrepancy between the electronic or digital versions of the Contract Documents (including any printed copies derived from such electronic or digital versions) and the printed record version, the printed record version shall govern.

D. The Contract supersedes prior negotiations, representations, and agreements, whether written or oral.

E. Engineer will issue clarifications and interpretations of the Contract Documents as provided herein.

3.02 *Reference Standards*

A. Standards Specifications, Codes, Laws and Regulations

1. Reference in the Contract Documents to standard specifications, manuals, reference standards, or codes of any technical society, organization, or association, or to Laws or Regulations, whether such reference be specific or by implication, shall mean the standard specification, manual, reference standard, code, or Laws or Regulations in effect at the time of opening of Bids (or on the Effective Date of the Contract if there were no Bids), except as may be otherwise specifically stated in the Contract Documents.

2. No provision of any such standard specification, manual, reference standard, or code, or any instruction of a Supplier, shall be effective to change the duties or responsibilities of Owner, Contractor, or Engineer, or any of their subcontractors, consultants, agents, or employees, from those set forth in the part of the Contract Documents prepared by or for Engineer. No such provision or instruction shall be effective to assign to Owner, Engineer, or any of their officers, directors, members, partners, employees, agents, consultants, or subcontractors, any duty or authority to supervise or direct the performance of the Work or any duty or authority to undertake responsibility inconsistent with the provisions of the part of the Contract Documents prepared by or for Engineer.

3.03 *Reporting and Resolving Discrepancies*

A. *Reporting Discrepancies*:

1. *Contractor's Verification of Figures and Field Measurements*: Before undertaking each part of the Work, Contractor shall carefully study the Contract Documents, and check and verify pertinent figures and dimensions therein, particularly with respect to applicable field measurements. Contractor shall promptly report in writing to Engineer any conflict, error, ambiguity, or discrepancy that Contractor discovers, or has actual knowledge of, and shall not proceed with any Work affected thereby until the conflict, error, ambiguity, or discrepancy is resolved, by a clarification or interpretation by Engineer, or by an amendment or supplement to the Contract Documents issued pursuant to Paragraph 11.01.

2. *Contractor's Review of Contract Documents*: If, before or during the performance of the Work, Contractor discovers any conflict, error, ambiguity, or discrepancy within the Contract Documents, or between the Contract Documents and (a) any applicable Law or Regulation, (b) actual field conditions, (c) any standard specification, manual, reference standard, or code, or (d) any instruction of any Supplier, then Contractor shall promptly report it to Engineer in writing. Contractor shall not proceed with the Work affected thereby (except in an emergency as required by Paragraph 7.15) until the conflict, error, ambiguity, or discrepancy is resolved, by a clarification or interpretation by Engineer, or by an amendment or supplement to the Contract Documents issued pursuant to Paragraph 11.01.

3. Contractor shall not be liable to Owner or Engineer for failure to report any conflict, error, ambiguity, or discrepancy in the Contract Documents unless Contractor had actual knowledge thereof.

B. *Resolving Discrepancies*:

1. Except as may be otherwise specifically stated in the Contract Documents, the provisions of the part of the Contract Documents prepared by or for Engineer shall take precedence in resolving any conflict, error, ambiguity, or discrepancy between such provisions of the Contract Documents and:

a. the provisions of any standard specification, manual, reference standard, or code, or the instruction of any Supplier (whether or not specifically incorporated by reference as a Contract Document); or

b. the provisions of any Laws or Regulations applicable to the performance of the Work (unless such an interpretation of the provisions of the Contract Documents would result in violation of such Law or Regulation).

3.04 *Requirements of the Contract Documents*

A. During the performance of the Work and until final payment, Contractor and Owner shall submit to the Engineer all matters in question concerning the requirements of the Contract Documents (sometimes referred to as requests for information or interpretation—RFIs), or relating to the acceptability of the Work under the Contract Documents, as soon as possible after such matters arise. Engineer will be the initial interpreter of the requirements of the Contract Documents, and judge of the acceptability of the Work thereunder.

B. Engineer will, with reasonable promptness, render a written clarification, interpretation, or decision on the issue submitted, or initiate an amendment or supplement to the Contract Documents. Engineer's written clarification, interpretation, or decision will be final and binding on Contractor, unless it appeals by submitting a Change Proposal, and on Owner, unless it appeals by filing a Claim.

C. If a submitted matter in question concerns terms and conditions of the Contract Documents that do not involve (1) the performance or acceptability of the Work under the Contract Documents, (2) the design (as set forth in the Drawings, Specifications, or otherwise), or (3) other engineering or technical matters, then Engineer will promptly give written notice to

Owner and Contractor that Engineer is unable to provide a decision or interpretation. If Owner and Contractor are unable to agree on resolution of such a matter in question, either party may pursue resolution as provided in Article 12.

3.05 *Reuse of Documents*

A. Contractor and its Subcontractors and Suppliers shall not:

1. have or acquire any title to or ownership rights in any of the Drawings, Specifications, or other documents (or copies of any thereof) prepared by or bearing the seal of Engineer or its consultants, including electronic media editions, or reuse any such Drawings, Specifications, other documents, or copies thereof on extensions of the Project or any other project without written consent of Owner and Engineer and specific written verification or adaptation by Engineer; or

2. have or acquire any title or ownership rights in any other Contract Documents, reuse any such Contract Documents for any purpose without Owner's express written consent, or violate any copyrights pertaining to such Contract Documents.

B. The prohibitions of this Paragraph 3.05 will survive final payment, or termination of the Contract. Nothing herein shall preclude Contractor from retaining copies of the Contract Documents for record purposes.

ARTICLE 4 – COMMENCEMENT AND PROGRESS OF THE WORK

4.01 *Commencement of Contract Times; Notice to Proceed*

A. The Contract Times will commence to run on the thirtieth day after the Effective Date of the Contract or, if a Notice to Proceed is given, on the day indicated in the Notice to Proceed. A Notice to Proceed may be given at any time within 30 days after the Effective Date of the Contract. ~~In no event will the Contract Times commence to run later than the sixtieth day after the day of Bid opening or the thirtieth day after the Effective Date of the Contract, whichever date is earlier.~~

4.02 *Starting the Work*

A. Contractor shall start to perform the Work on the date when the Contract Times commence to run. No Work shall be done at the Site prior to such date.

4.03 *Reference Points*

A. Owner shall provide engineering surveys to establish reference points for construction which in Engineer's judgment are necessary to enable Contractor to proceed with the Work. Contractor shall be responsible for laying out the Work, shall protect and preserve the established reference points and property monuments, and shall make no changes or relocations without the prior written approval of Owner. Contractor shall report to Engineer whenever any reference point or property monument is lost or destroyed or requires relocation because of necessary changes in grades or locations, and shall be responsible for the accurate replacement or relocation of such reference points or property monuments by professionally qualified personnel.

4.04 *Progress Schedule*

A. Contractor shall adhere to the Progress Schedule established in accordance with Paragraph 2.05 as it may be adjusted from time to time as provided below.

1. Contractor shall submit to Engineer for acceptance (to the extent indicated in Paragraph 2.05) proposed adjustments in the Progress Schedule that will not result in changing the Contract Times.

2. Proposed adjustments in the Progress Schedule that will change the Contract Times shall be submitted in accordance with the requirements of Article 11.

B. Contractor shall carry on the Work and adhere to the Progress Schedule during all disputes or disagreements with Owner. No Work shall be delayed or postponed pending resolution of any disputes or disagreements, or during any appeal process, except as permitted by Paragraph 16.04, or as Owner and Contractor may otherwise agree in writing.

4.05 *Delays in Contractor's Progress*

A. If Owner, Engineer, or anyone for whom Owner is responsible, delays, disrupts, or interferes with the performance or progress of the Work, then Contractor shall be entitled to an equitable adjustment in the Contract Times ~~and Contract Price~~. Contractor's entitlement to an adjustment of the Contract Times is conditioned on such adjustment being essential to Contractor's ability to complete the Work within the Contract Times. Paragraph 11.05 governs changes in the Contract Times. **A CHANGE IN THE CONTRACT TIMES SHALL CONSTITUTE CONTRACTOR'S SOLE REMEDY OR EXCUSE WITH RESPECT TO DELAY**. Contractor shall not be entitled to an increase in the Contract Price or payment of any kind from Owner for direct, indirect, consequential, impact or other costs, expenses or damages, including but not limited to costs of acceleration or inefficiency, arising because of delay, disruption, interference, or hindrance from any cause whatsoever, including any delays or hindrances caused by Owner, Engineer, or anyone for whom Owner is responsible.

B. Contractor shall not be entitled to an adjustment in Contract Price or Contract Times for delay, disruption, or interference caused by or within the control of Contractor. Delay, disruption, and interference attributable to and within the control of a Subcontractor or Supplier shall be deemed to be within the control of Contractor.

C. If Contractor's performance or progress is delayed, disrupted, or interfered with by unanticipated causes not the fault of and beyond the control of Owner, Contractor, and those for which they are responsible, then Contractor shall be entitled to an equitable adjustment in Contract Times. Contractor's entitlement to an adjustment of the Contract Times is conditioned on such adjustment being essential to Contractor's ability to complete the Work within the Contract Times. Such an adjustment shall be Contractor's sole and exclusive remedy for the delays, disruption, and interference described in this paragraph. Causes of delay, disruption, or interference that may give rise to an adjustment in Contract Times under this paragraph include but are not limited to the following:

1. severe and unavoidable natural catastrophes such as fires, floods, epidemics, and earthquakes;
2. abnormal weather conditions;
3. acts or failures to act of utility owners (other than those performing other work at or adjacent to the Site by arrangement with the Owner, as contemplated in Article 8); and
4. acts of war or terrorism.

D. Delays, disruption, and interference to the performance or progress of the Work resulting from the existence of a differing subsurface or physical condition, an Underground Facility that was not shown or indicated by the Contract Documents, or not shown or indicated with reasonable accuracy, and those resulting from Hazardous Environmental Conditions, are governed by Article 5.

E. Paragraph 8.03 governs delays, disruption, and interference to the performance or progress of the Work resulting from the performance of certain other work at or adjacent to the Site.

F. Contractor shall not be entitled to an adjustment in Contract Price or Contract Times for any delay, disruption, or interference if such delay is concurrent with a delay, disruption, or interference caused by or within the control of Contractor.

G. Contractor must submit any Change Proposal seeking an adjustment in Contract Price or Contract Times under this paragraph within 10 ~~30~~ days of the commencement of the delaying, disrupting, or interfering event.

ARTICLE 5 – AVAILABILITY OF LANDS; SUBSURFACE AND PHYSICAL CONDITIONS; HAZARDOUS ENVIRONMENTAL CONDITIONS

5.01 *Availability of Lands*

A. Owner shall furnish the Site. Owner shall notify Contractor of any encumbrances or restrictions not of general application but specifically related to use of the Site with which Contractor must comply in performing the Work.

~~B. Upon reasonable written request, Owner shall furnish Contractor with a current statement of~~

~~record legal title and legal description of the lands upon which permanent improvements are to be made and Owner's interest therein as necessary for giving notice of or filing a mechanic's or construction lien against such lands in accordance with applicable Laws and Regulations.~~

C. Contractor shall provide for all additional lands and access thereto that may be required for temporary construction facilities or storage of materials and equipment.

5.02 *Use of Site and Other Areas*

A. *Limitation on Use of Site and Other Areas*:

1. Contractor shall confine construction equipment, temporary construction facilities, the storage of materials and equipment, and the operations of workers to the Site, adjacent areas that Contractor has arranged to use through construction easements or otherwise, and other adjacent areas permitted by Laws and Regulations, and shall not unreasonably encumber the Site and such other adjacent areas with construction equipment or other materials or equipment. Contractor shall assume full responsibility for (a) damage to the Site; (b) damage to any such other adjacent areas used for Contractor's operations; (c) damage to any other adjacent land or areas; and (d) for injuries and losses sustained by the owners or occupants of any such land or areas; provided that such damage or injuries result from the performance of the Work or from other actions or conduct of the Contractor or those for which Contractor is responsible.

2. If a damage or injury claim is made by the owner or occupant of any such land or area because of the performance of the Work, or because of other actions or conduct of the Contractor or those for which Contractor is responsible, Contractor shall (a) take immediate corrective or remedial action as required by Paragraph 7.12, or otherwise; (b) promptly attempt to settle the claim as to all parties through negotiations with such owner or occupant, or otherwise resolve the claim by arbitration or other dispute resolution proceeding, or at law; and (c) to the fullest extent permitted by Laws and Regulations, indemnify and hold harmless Owner and Engineer, and the officers, directors, members, partners, employees, agents, consultants and subcontractors of each and any of them from and against any such claim, and against all costs, losses, and damages (including but not limited to all fees and charges of engineers, architects, attorneys, and other professionals and all court or arbitration or other dispute resolution costs) arising out of or relating to any claim or action, legal or equitable, brought by any such owner or occupant against Owner, Engineer, or any other party indemnified hereunder to the extent caused directly or indirectly, in whole or in part by, or based upon, Contractor's performance of the Work, or because of other actions or conduct of the Contractor or those for which Contractor is responsible.

B. *Removal of Debris During Performance of the Work*: During the progress of the Work the Contractor shall keep the Site and other adjacent areas free from accumulations of waste materials, rubbish, and other debris. Removal and disposal of such waste materials, rubbish, and other debris shall conform to applicable Laws and Regulations.

C. *Cleaning*: Prior to Substantial Completion of the Work Contractor shall clean the Site and the Work and make it ready for utilization by Owner. At the completion of the Work Contractor shall remove from the Site and adjacent areas all tools, appliances, construction equipment and machinery, and surplus materials and shall restore to original condition all property not designated for alteration by the Contract Documents.

D. *Loading of Structures*: Contractor shall not load nor permit any part of any structure to be loaded in any manner that will endanger the structure, nor shall Contractor subject any part of the Work or adjacent structures or land to stresses or pressures that will endanger them.

5.03 *Subsurface and Physical Conditions*

A. *Reports and Drawings*: The Supplementary Conditions identify:

1. those reports known to Owner of explorations and tests of subsurface conditions at or adjacent to the Site;

2. those drawings known to Owner of physical conditions relating to existing surface or subsurface structures at the Site (except Underground Facilities); and

3. Technical Data contained in such reports and drawings.

B. *Reliance by Contractor on Technical Data Authorized*: Contractor may rely upon the accuracy of the Technical Data expressly identified in the Supplementary Conditions with respect to such reports and drawings, but such reports and drawings are not Contract Documents. If no such express identification has been made, then Contractor may rely upon the accuracy of the Technical Data (as defined in Article 1) contained in any geotechnical or environmental report prepared for the Project and made available to Contractor. Except for such reliance on Technical Data, Contractor may not rely upon or make any claim against Owner or Engineer, or any of their officers, directors, members, partners, employees, agents, consultants, or subcontractors, with respect to:

1. the completeness of such reports and drawings for Contractor's purposes, including, but not limited to, any aspects of the means, methods, techniques, sequences, and procedures of construction to be employed by Contractor, and safety precautions and programs incident thereto; or

2. other data, interpretations, opinions, and information contained in such reports or shown or indicated in such drawings; or

3. any Contractor interpretation of or conclusion drawn from any Technical Data or any such other data, interpretations, opinions, or information.

5.04 *Differing Subsurface or Physical Conditions*

A. *Notice by Contractor*: If Contractor believes that any subsurface or physical condition that is uncovered or revealed at the Site either:

1. is of such a nature as to establish that any Technical Data on which Contractor is entitled to rely as provided in Paragraph 5.03 is materially inaccurate; or

2. is of such a nature as to require a change in the Drawings or Specifications; or

3. differs materially from that shown or indicated in the Contract Documents; or

4. is of an unusual nature, and differs materially from conditions ordinarily encountered and generally recognized as inherent in work of the character provided for in the Contract Documents;

then Contractor shall, promptly after becoming aware thereof (but in no event later than 10 days) and before further disturbing the subsurface or physical conditions or performing any Work in connection therewith (except in an emergency as required by Paragraph 7.15), notify Owner and Engineer in writing about such condition. Contractor shall not further disturb such condition or perform any Work in connection therewith (except with respect to an emergency) until receipt of a written statement permitting Contractor to do so. Contractor's written notice must indicate, in conspicuous bold type on the face of the notice, **NOTICE OF DIFFERING CONDITIONS**. The notice must describe the nature of the differing conditions, including all relevant facts. Contractor shall be deemed to have waived any Claim arising from or relating to differing conditions if Contractor fails to provide notice in compliance with this Paragraph 5.04.A. Any changes in the Work or the Contract will be processed in accordance with Article 11. Any Claim arising from or relating to differing conditions must comply with Article 12.

B. *Engineer's Review*: After receipt of written notice as required by the preceding paragraph, Engineer will promptly review the subsurface or physical condition in question; determine the necessity of Owner's obtaining additional exploration or tests with respect to the

condition; conclude whether the condition falls within any one or more of the differing site condition categories in Paragraph 5.04.A above; obtain any pertinent cost or schedule information from Contractor; prepare recommendations to Owner regarding the Contractor's resumption of Work in connection with the subsurface or physical condition in question and the need for any change in the Drawings or Specifications; and advise Owner in writing of Engineer's findings, conclusions, and recommendations.

C. *Owner's Statement to Contractor Regarding Site Condition*: After receipt of Engineer's written findings, conclusions, and recommendations, Owner shall issue a written statement to Contractor (with a copy to Engineer) regarding the subsurface or physical condition in question, addressing the resumption of Work in connection with such condition, indicating whether any change in the Drawings or Specifications will be made, and adopting or rejecting Engineer's written findings, conclusions, and recommendations, in whole or in part.

D. *Possible Price and Times Adjustments*:

1. Contractor shall be entitled to an equitable adjustment in Contract Price or Contract Times, or both, to the extent that the existence of a differing subsurface or physical condition, or any related delay, disruption, or interference, causes an increase or decrease in Contractor's cost of, or time required for, performance of the Work; subject, however, to the following:

   a. such condition must fall within any one or more of the categories described in Paragraph 5.04.A;

   b. with respect to Work that is paid for on a unit price basis, any adjustment in Contract Price will be subject to the provisions of Paragraph 13.03; and,

   c. Contractor's entitlement to an adjustment of the Contract Times is conditioned on such adjustment being essential to Contractor's ability to complete the Work within the Contract Times.

2. Contractor shall not be entitled to any adjustment in the Contract Price or Contract Times with respect to a subsurface or physical condition if:

   a. Contractor knew of the existence of such condition at the time Contractor made a commitment to Owner with respect to Contract Price and Contract Times by the submission of a Bid or becoming bound under a negotiated contract, or otherwise; or

   b. the existence of such condition reasonably could have been discovered or revealed as a result of any examination, investigation, exploration, test, or study of the Site and contiguous areas expressly required by the Bidding Requirements or Contract Documents to be conducted by or for Contractor prior to Contractor's making such commitment; or

   c. Contractor failed to give the written notice as required by Paragraph 5.04.A.

3. If Owner and Contractor agree regarding Contractor's entitlement to and the amount or extent of any adjustment in the Contract Price or Contract Times, or both, then any such adjustment shall be set forth in a Change Order.

4. Contractor may submit a Change Proposal regarding its entitlement to or the amount or extent of any adjustment in the Contract Price or Contract Times, or both, no later than 30 days after Owner's issuance of the Owner's written statement to Contractor regarding the subsurface or physical condition in question.

5.05 *Underground Facilities*

A. *Contractor's Responsibilities*: The information and data shown or indicated in the Contract Documents with respect to existing Underground Facilities at or adjacent to the Site is based on information and data furnished to Owner or Engineer by the owners of such Underground Facilities, including Owner, or by

others. Unless it is otherwise expressly provided in the Supplementary Conditions:

1. Owner and Engineer do not warrant or guarantee the accuracy or completeness of any such information or data provided by others; and
2. the cost of all of the following will be included in the Contract Price, and Contractor shall have full responsibility for:
    a. reviewing and checking all information and data regarding existing Underground Facilities at the Site;
    b. locating all Underground Facilities shown or indicated in the Contract Documents as being at the Site;
    c. coordination of the Work with the owners (including Owner) of such Underground Facilities, during construction; and
    d. the safety and protection of all existing Underground Facilities at the Site, and repairing any damage thereto resulting from the Work.

B. *Notice by Contractor*: If Contractor believes that an Underground Facility that is uncovered or revealed at the Site was not shown or indicated in the Contract Documents, or was not shown or indicated with reasonable accuracy, then Contractor shall, promptly after becoming aware thereof and before further disturbing conditions affected thereby or performing any Work in connection therewith (except in an emergency as required by Paragraph 7.15), identify the owner of such Underground Facility and give written notice to that owner and to Owner and Engineer. Contractor's notice to Owner must comply with the deadlines and format requirements set forth in Paragraph 5.04.A.

C. *Engineer's Review*: Engineer will promptly review the Underground Facility and conclude whether such Underground Facility was not shown or indicated in the Contract Documents, or was not shown or indicated with reasonable accuracy; obtain any pertinent cost or schedule information from Contractor; prepare recommendations to Owner regarding the Contractor's resumption of Work in connection with the Underground Facility in question; determine the extent, if any, to which a change is required in the Drawings or Specifications to reflect and document the consequences of the existence or location of the Underground Facility; and advise Owner in writing of Engineer's findings, conclusions, and recommendations. During such time, Contractor shall be responsible for the safety and protection of such Underground Facility.

D. *Owner's Statement to Contractor Regarding Underground Facility*: After receipt of Engineer's written findings, conclusions, and recommendations, Owner shall issue a written statement to Contractor (with a copy to Engineer) regarding the Underground Facility in question, addressing the resumption of Work in connection with such Underground Facility, indicating whether any change in the Drawings or Specifications will be made, and adopting or rejecting Engineer's written findings, conclusions, and recommendations in whole or in part.

E. *Possible Price and Times Adjustments*:

1. Contractor shall be entitled to an equitable adjustment in the Contract Price or Contract Times, or both, to the extent that any existing Underground Facility at the Site that was not shown or indicated in the Contract Documents, or was not shown or indicated with reasonable accuracy, or any related delay, disruption, or interference, causes an increase or decrease in Contractor's cost of, or time required for, performance of the Work; subject, however, to the following:
    a. Contractor did not know of and could not reasonably have been expected to be aware of or to have anticipated the existence or actual location of the Underground Facility in question;
    b. With respect to Work that is paid for on a unit price basis, any adjustment in Contract Price will be subject to the provisions of Paragraph 13.03;
    c. Contractor's entitlement to an adjustment of the Contract Times is conditioned on such adjustment being

essential to Contractor's ability to complete the Work within the Contract Times; and

d. Contractor gave the notice required in Paragraph 5.05.B.

2. If Owner and Contractor agree regarding Contractor's entitlement to and the amount or extent of any adjustment in the Contract Price or Contract Times, or both, then any such adjustment shall be set forth in a Change Order.

3. Contractor may submit a Change Proposal regarding its entitlement to or the amount or extent of any adjustment in the Contract Price or Contract Times, or both, no later than 30 days after Owner's issuance of the Owner's written statement to Contractor regarding the Underground Facility in question.

5.06 *Hazardous Environmental Conditions at Site*

A. *Reports and Drawings*: The Supplementary Conditions identify:

1. those reports and drawings known to Owner relating to Hazardous Environmental Conditions that have been identified at or adjacent to the Site; and

2. Technical Data contained in such reports and drawings.

B. *Reliance by Contractor on Technical Data Authorized*: Contractor may rely upon the accuracy of the Technical Data expressly identified in the Supplementary Conditions with respect to such reports and drawings, but such reports and drawings are not Contract Documents. If no such express identification has been made, then Contractor may rely on the accuracy of the Technical Data (as defined in Article 1) contained in any geotechnical or environmental report prepared for the Project and made available to Contractor. Except for such reliance on Technical Data, Contractor may not rely upon or make any claim against Owner or Engineer, or any of their officers, directors, members, partners, employees, agents, consultants, or subcontractors with respect to:

1. the completeness of such reports and drawings for Contractor's purposes, including, but not limited to, any aspects of the means, methods, techniques, sequences and procedures of construction to be employed by Contractor and safety precautions and programs incident thereto; or

2. other data, interpretations, opinions and information contained in such reports or shown or indicated in such drawings; or

3. any Contractor interpretation of or conclusion drawn from any Technical Data or any such other data, interpretations, opinions or information.

C. Contractor shall not be responsible for removing or remediating any Hazardous Environmental Condition encountered, uncovered, or revealed at the Site unless such removal or remediation is expressly identified in the Contract Documents to be within the scope of the Work.

D. Contractor shall be responsible for controlling, containing, and duly removing all Constituents of Concern brought to the Site by Contractor, Subcontractors, Suppliers, or anyone else for whom Contractor is responsible, and for any associated costs; and for the costs of removing and remediating any Hazardous Environmental Condition created by the presence of any such Constituents of Concern.

E. If Contractor encounters, uncovers, or reveals a Hazardous Environmental Condition whose removal or remediation is not expressly identified in the Contract Documents as being within the scope of the Work, or if Contractor or anyone for whom Contractor is responsible creates a Hazardous Environmental Condition, then Contractor shall immediately: (1) secure or otherwise isolate such condition; (2) stop all Work in connection with such condition and in any area affected thereby (except in an emergency as required by Paragraph 7.15); and (3) notify Owner and Engineer (and promptly thereafter confirm such notice in writing). Owner shall promptly consult with Engineer concerning the necessity for Owner to retain a qualified expert to evaluate such condition or take corrective action, if any. Promptly after consulting with Engineer, Owner shall take such actions as are necessary to permit Owner to

timely obtain required permits and provide Contractor the written notice required by Paragraph 5.06.F. If Contractor or anyone for whom Contractor is responsible created the Hazardous Environmental Condition in question, then Owner may remove and remediate the Hazardous Environmental Condition, and impose a set-off against payments to account for the associated costs.

F. Contractor shall not resume Work in connection with such Hazardous Environmental Condition or in any affected area until after Owner has obtained any required permits related thereto, and delivered written notice to Contractor either (1) specifying that such condition and any affected area is or has been rendered safe for the resumption of Work, or (2) specifying any special conditions under which such Work may be resumed safely.

G. If Owner and Contractor cannot agree as to entitlement to or on the amount or extent, if any, of any adjustment in Contract Price or Contract Times, or both, as a result of such Work stoppage or such special conditions under which Work is agreed to be resumed by Contractor, then within 30 days of Owner's written notice regarding the resumption of Work, Contractor may submit a Change Proposal, or Owner may impose a set-off.

H. If after receipt of such written notice Contractor does not agree to resume such Work based on a reasonable belief it is unsafe, or does not agree to resume such Work under such special conditions, then Owner may order the portion of the Work that is in the area affected by such condition to be deleted from the Work, following the contractual change procedures in Article 11. Owner may have such deleted portion of the Work performed by Owner's own forces or others in accordance with Article 8.

I. To the fullest extent permitted by Laws and Regulations, Owner shall indemnify and hold harmless Contractor, Subcontractors, and Engineer, and the officers, directors, members, partners, employees, agents, consultants, and subcontractors of each and any of them from and against all claims, costs, losses, and damages (including but not limited to all fees and charges of engineers, architects, attorneys, and other professionals and all court or arbitration or other dispute resolution costs) arising out of or relating to a Hazardous Environmental Condition, provided that such Hazardous Environmental Condition (1) was not shown or indicated in the Drawings, Specifications, or other Contract Documents, identified as Technical Data entitled to limited reliance pursuant to Paragraph 5.06.B, or identified in the Contract Documents to be included within the scope of the Work, and (2) was not created by Contractor or by anyone for whom Contractor is responsible. Nothing in this Paragraph 5.06.I shall obligate Owner to indemnify any individual or entity from and against the consequences of that individual's or entity's own negligence.

J. To the fullest extent permitted by Laws and Regulations, Contractor shall indemnify and hold harmless Owner and Engineer, and the officers, directors, members, partners, employees, agents, consultants, and subcontractors of each and any of them from and against all claims, costs, losses, and damages (including but not limited to all fees and charges of engineers, architects, attorneys, and other professionals and all court or arbitration or other dispute resolution costs) arising out of or relating to the failure to control, contain, or remove a Constituent of Concern brought to the Site by Contractor or by anyone for whom Contractor is responsible, or to a Hazardous Environmental Condition created by Contractor or by anyone for whom Contractor is responsible. Nothing in this Paragraph 5.06.J shall obligate Contractor to indemnify any individual or entity from and against the consequences of that individual's or entity's own negligence.

K. The provisions of Paragraphs 5.03, 5.04, and 5.05 do not apply to the presence of Constituents of Concern or to a Hazardous Environmental Condition uncovered or revealed at the Site.

ARTICLE 6 – BONDS AND INSURANCE

6.01 *Performance, Payment, and Other Bonds*

A. Contractor shall furnish a performance bond and a payment bond, each in an amount at least equal to the Contract Price, or a combined Public Construction Bond in the amount of the Contract

Price, as security for the faithful performance and payment of all of Contractor's obligations under the Contract. These bonds shall remain in effect until one year after the date when final payment becomes due or until completion of the correction period specified in Paragraph 15.08, whichever is later, except as provided otherwise by Laws or Regulations, the Supplementary Conditions, or other specific provisions of the Contract. Contractor shall also furnish such other bonds as are required by the Supplementary Conditions or other specific provisions of the Contract.

B. All bonds shall be in the form prescribed by the Contract except as provided otherwise by Laws or Regulations, including section 255.05, Florida Statutes (2018), and shall be executed by such sureties as are named in "Companies Holding Certificates of Authority as Acceptable Sureties on Federal Bonds and as Acceptable Reinsuring Companies" as published in Circular 570 (as amended and supplemented) by the Financial Management Service, Surety Bond Branch, U.S. Department of the Treasury. A bond signed by an agent or attorney-in-fact must be accompanied by a certified copy of that individual's authority to bind the surety. The evidence of authority shall show that it is effective on the date the agent or attorney-in-fact signed the accompanying bond.

C. Contractor shall obtain the required bonds from surety companies that are duly licensed or authorized in the jurisdiction in which the Project is located to issue bonds in the required amounts.

D. If the surety on a bond furnished by Contractor is declared bankrupt or becomes insolvent, or its right to do business is terminated in any state or jurisdiction where any part of the Project is located, or the surety ceases to meet the requirements above, then Contractor shall promptly notify Owner and Engineer and shall, within 20 days after the event giving rise to such notification, provide another bond and surety, both of which shall comply with the bond and surety requirements above.

E. If Contractor has failed to obtain a required bond, Owner may exclude the Contractor from the Site and exercise Owner's termination rights under Article 16.

F. Upon request, Owner shall provide a copy of the payment bond to any Subcontractor, Supplier, or other person or entity claiming to have furnished labor or materials used in the performance of the Work.

6.02 *Insurance—General Provisions*

A. ~~Owner and~~ Contractor shall obtain and maintain insurance as required in this Article and in the Supplementary Conditions.

B. All insurance required by the Contract to be purchased and maintained by ~~Owner or~~ Contractor shall be obtained from insurance companies that are duly licensed or authorized, in the state or jurisdiction in which the Project is located, to issue insurance policies for the required limits and coverages. Unless a different standard is indicated in the Supplementary Conditions, all companies that provide insurance policies required under this Contract shall have an A.M. Best rating of A-VII or better.

C. Contractor shall deliver to Owner, with copies to each named insured and additional insured (as identified in this Article, in the Supplementary Conditions, or elsewhere in the Contract), certificates of insurance establishing that Contractor has obtained and is maintaining the policies, coverages, and endorsements required by the Contract. Upon request by Owner or any other insured, Contractor shall also furnish other evidence of such required insurance, including but not limited to copies of policies and endorsements, and documentation of applicable self-insured retentions and deductibles. Contractor may block out (redact) any confidential premium or pricing information contained in any policy or endorsement furnished under this provision.

~~D. Owner shall deliver to Contractor, with copies to each named insured and additional insured (as identified in this Article, the Supplementary Conditions, or elsewhere in the Contract), certificates of insurance establishing that Owner has obtained and is maintaining the policies, coverages, and endorsements required of Owner by the Contract (if any). Upon request by Contractor or any other insured, Owner shall~~

~~also provide other evidence of such required insurance (if any), including but not limited to copies of policies and endorsements, and documentation of applicable self-insured retentions and deductibles. Owner may block out (redact) any confidential premium or pricing information contained in any policy or endorsement furnished under this provision.~~

E. Failure of Owner ~~or Contractor~~ to demand such certificates or other evidence of Contractor's ~~the other party's~~ full compliance with these insurance requirements, or failure of Owner ~~or Contractor~~ to identify a deficiency in compliance from the evidence provided, shall not be construed as a waiver of Contractor's ~~the other party's~~ obligation to obtain and maintain such insurance.

F. If Contractor ~~either party~~ does not purchase or maintain all of the insurance required of Contractor ~~such party~~ by the Contract, Contractor ~~such party~~ shall notify Owner ~~the other party~~ in writing of such failure to purchase prior to the start of the Work, or of such failure to maintain prior to any change in the required coverage.

G. If Contractor has failed to obtain and maintain required insurance, Owner may exclude the Contractor from the Site, impose an appropriate set-off against payment, and exercise Owner's termination rights under Article 16.

H. Without prejudice to any other right or remedy, if Contractor ~~a party~~ has failed to obtain required insurance, Owner ~~the other party~~ may elect to obtain equivalent insurance to protect Owner's ~~such other party's~~ interests at the expense of Contractor ~~the party who was required to provide such coverage~~, and the Contract Price shall be adjusted accordingly.

I. Owner does not represent that insurance coverage and limits established in this Contract necessarily will be adequate to protect Contractor or Contractor's interests.

J. The insurance and insurance limits required herein shall not be deemed as a limitation on Contractor's liability under the indemnities granted to Owner and other individuals and entities in the Contract.

6.03 *Contractor's Insurance*

A. *Workers' Compensation*: Contractor shall purchase and maintain workers' compensation and employer's liability insurance for:

1. claims under workers' compensation, disability benefits, and other similar employee benefit acts.

2. United States Longshoreman and Harbor Workers' Compensation Act and Jones Act coverage (if applicable).

3. claims for damages because of bodily injury, occupational sickness or disease, or death of Contractor's employees (by stop-gap endorsement in monopolist worker's compensation states).

4. Foreign voluntary worker compensation (if applicable).

B. *Commercial General Liability—Claims Covered*: Contractor shall purchase and maintain commercial general liability insurance, covering all operations by or on behalf of Contractor, on an occurrence basis, against:

1. claims for damages because of bodily injury, sickness or disease, or death of any person other than Contractor's employees.

2. claims for damages insured by reasonably available personal injury liability coverage.

3. claims for damages, other than to the Work itself, because of injury to or destruction of tangible property wherever located, including loss of use resulting therefrom.

C. *Commercial General Liability—Form and Content*: Contractor's commercial liability policy shall be written on a 1996 (or later) ISO commercial general liability form (occurrence form) and include the following coverages and endorsements:

1. Products and completed operations coverage:

a. Such insurance shall be maintained for three years after final payment.

b. Contractor shall furnish Owner and each other additional insured (as identified in the Supplementary Conditions or elsewhere in the

Contract) evidence of continuation of such insurance at final payment and three years thereafter.

2. Blanket contractual liability coverage, to the extent permitted by law, including but not limited to coverage of Contractor's contractual indemnity obligations in Paragraphs 5.02, 5.05, and 7.18.
3. Broad form property damage coverage.
4. Severability of interest.
5. Underground, explosion, and collapse coverage.
6. Personal injury coverage.
7. Additional insured endorsements that include both ongoing operations and products and completed operations coverage through ISO Endorsements CG 20 10 10 01 and CG 20 37 10 01 (together); or CG 20 10 07 04 and CG 20 37 07 04 (together); or their equivalent.
8. For design professional additional insureds, ISO Endorsement CG 20 32 07 04, "Additional Insured—Engineers, Architects or Surveyors Not Engaged by the Named Insured" or its equivalent.

D. *Automobile liability*: Contractor shall purchase and maintain automobile liability insurance against claims for damages because of bodily injury or death of any person or property damage arising out of the ownership, maintenance, or use of any motor vehicle. The automobile liability policy shall be written on an occurrence basis.

E. *Umbrella or excess liability*: Contractor shall purchase and maintain umbrella or excess liability insurance written over the underlying employer's liability, commercial general liability, and automobile liability insurance described in the paragraphs above. Subject to industry-standard exclusions, the coverage afforded shall follow form as to each and every one of the underlying policies.

F. *Contractor's pollution liability insurance*: Contractor shall purchase and maintain a policy covering third-party injury and property damage claims, including clean-up costs, as a result of pollution conditions arising from Contractor's operations and completed operations. This insurance shall be maintained for no less than three years after final completion.

G. *Additional insureds*: The Contractor's commercial general liability, automobile liability, umbrella or excess, and pollution liability policies shall include and list as additional insureds Owner and Engineer, and any individuals or entities identified in the Supplementary Conditions; include coverage for the respective officers, directors, members, partners, employees, agents, consultants, and subcontractors of each and any of all such additional insureds; and the insurance afforded to these additional insureds shall provide primary coverage for all claims covered thereby (including as applicable those arising from both ongoing and completed operations) on a non-contributory basis. Contractor shall obtain all necessary endorsements to support these requirements.

H. *Contractor's professional liability insurance*: If Contractor will provide or furnish professional services under this Contract, through a delegation of professional design services or otherwise, then Contractor shall be responsible for purchasing and maintaining applicable professional liability insurance. This insurance shall provide protection against claims arising out of performance of professional design or related services, and caused by a negligent error, omission, or act for which the insured party is legally liable. It shall be maintained throughout the duration of the Contract and for a minimum of two years after Substantial Completion. If such professional design services are performed by a Subcontractor, and not by Contractor itself, then the requirements of this paragraph may be satisfied through the purchasing and maintenance of such insurance by such Subcontractor.

I. *General provisions*: The policies of insurance required by this Paragraph 6.03 shall:

1. include at least the specific coverages provided in this Article.
2. be written for not less than the limits of liability provided in this Article and in the

Supplementary Conditions, or required by Laws or Regulations, whichever is greater.

3. contain a provision or endorsement that the coverage afforded will not be canceled, materially changed, or renewal refused until at least 10 days prior written notice has been given to Contractor. Within three days of receipt of any such written notice, Contractor shall provide a copy of the notice to Owner, Engineer, and each other insured under the policy.

4. remain in effect at least until final payment (and longer if expressly required in this Article) and at all times thereafter when Contractor may be correcting, removing, or replacing defective Work as a warranty or correction obligation, or otherwise, or returning to the Site to conduct other tasks arising from the Contract Documents.

5. be appropriate for the Work being performed and provide protection from claims that may arise out of or result from Contractor's performance of the Work and Contractor's other obligations under the Contract Documents, whether it is to be performed by Contractor, any Subcontractor or Supplier, or by anyone directly or indirectly employed by any of them to perform any of the Work, or by anyone for whose acts any of them may be liable.

J. The coverage requirements for specific policies of insurance must be met by such policies, and not by reference to excess or umbrella insurance provided in other policies.

6.04 ~~*Owner's Liability Insurance*~~ [Deleted.]

6.05 *Property Insurance*

A. *Builder's Risk*: Unless otherwise provided in the Supplementary Conditions, Contractor shall purchase and maintain builder's risk insurance upon the Work on a completed value basis, in the amount of the full insurable replacement cost thereof (subject to such deductible amounts as may be provided in the Supplementary Conditions or required by Laws and Regulations). This insurance shall:

1. include the Owner and Contractor as named insureds, and all Subcontractors, and any individuals or entities required by the Supplementary Conditions to be insured under such builder's risk policy, as insureds or named insureds. For purposes of the remainder of this Paragraph 6.05, Paragraphs 6.06 and 6.07, and any corresponding Supplementary Conditions, the parties required to be insured shall collectively be referred to as "insureds."

2. be written on a builder's risk "all risk" policy form that shall at least include insurance for physical loss or damage to the Work, temporary buildings, falsework, and materials and equipment in transit, and shall insure against at least the following perils or causes of loss: fire; lightning; windstorm; riot; civil commotion; terrorism; vehicle impact; aircraft; smoke; theft; vandalism and malicious mischief; mechanical breakdown, boiler explosion, and artificially generated electric current; earthquake; volcanic activity, and other earth movement; flood; collapse; explosion; debris removal; demolition occasioned by enforcement of Laws and Regulations; water damage (other than that caused by flood); and such other perils or causes of loss as may be specifically required by the Supplementary Conditions. If insurance against mechanical breakdown, boiler explosion, and artificially generated electric current; earthquake; volcanic activity, and other earth movement; or flood, are not commercially available under builder's risk policies, by endorsement or otherwise, such insurance may be provided through other insurance policies acceptable to Owner and Contractor.

3. cover, as insured property, at least the following: (a) the Work and all materials, supplies, machinery, apparatus, equipment, fixtures, and other property of a similar nature that are to be incorporated into or used in the preparation, fabrication, construction, erection, or completion of the Work, including Owner-furnished or assigned property; (b) spare parts inventory required within the scope of the Contract;

and (c) temporary works which are not intended to form part of the permanent constructed Work but which are intended to provide working access to the Site, or to the Work under construction, or which are intended to provide temporary support for the Work under construction, including scaffolding, form work, fences, shoring, falsework, and temporary structures.

4. cover expenses incurred in the repair or replacement of any insured property (including but not limited to fees and charges of engineers and architects).

5. extend to cover damage or loss to insured property while in temporary storage at the Site or in a storage location outside the Site (but not including property stored at the premises of a manufacturer or Supplier).

6. extend to cover damage or loss to insured property while in transit.

7. allow for partial occupation or use of the Work by Owner, such that those portions of the Work that are not yet occupied or used by Owner shall remain covered by the builder's risk insurance.

~~8. allow for the waiver of the insurer's subrogation rights, as set forth below.~~

9. provide primary coverage for all losses and damages caused by the perils or causes of loss covered.

10. not include a co-insurance clause.

11. include an exception for ensuing losses from physical damage or loss with respect to any defective workmanship, design, or materials exclusions.

12. include performance/hot testing and start-up.

13. be maintained in effect, subject to the provisions herein regarding Substantial Completion and partial occupancy or use of the Work by Owner, until the Work is complete.

B. *Notice of Cancellation or Change*: All the policies of insurance (and the certificates or other evidence thereof) required to be purchased and maintained in accordance with this Paragraph 6.05 will contain a provision or endorsement that the coverage afforded will not be canceled or materially changed or renewal refused until at least 10 days prior written notice has been given to the purchasing policyholder. Within three days of receipt of any such written notice, the purchasing policyholder shall provide a copy of the notice to each other insured.

C. *Deductibles*: The purchaser of any required builder's risk or property insurance shall pay for costs not covered because of the application of a policy deductible.

D. *Partial Occupancy or Use by Owner*: If Owner will occupy or use a portion or portions of the Work prior to Substantial Completion of all the Work as provided in Paragraph 15.04, then Owner (directly, if it is the purchaser of the builder's risk policy, or through Contractor) will provide notice of such occupancy or use to the builder's risk insurer. The builder's risk insurance shall not be canceled or permitted to lapse on account of any such partial use or occupancy; rather, those portions of the Work that are occupied or used by Owner may come off the builder's risk policy, while those portions of the Work not yet occupied or used by Owner shall remain covered by the builder's risk insurance.

E. *Additional Insurance*: If Contractor elects to obtain other special insurance to be included in or supplement the builder's risk or property insurance policies provided under this Paragraph 6.05, it may do so at Contractor's expense.

F. *Insurance of Other Property*: If the express insurance provisions of the Contract do not require or address the insurance of a property item or interest, such as tools, construction equipment, or other personal property owned by Contractor, a Subcontractor, or an employee of Contractor or a Subcontractor, then the entity or individual owning such property item will be responsible for deciding whether to insure it, and if so in what amount.

6.06 ~~*Waiver of Rights*~~ [Deleted.]

6.07 *Receipt and Application of Property Insurance Proceeds*

A. Any insured loss under the builder's risk and other policies of insurance required by Paragraph 6.05 will be adjusted and settled with

the named insured that purchased the policy. Such named insured shall act as fiduciary for the other insureds, and give notice to such other insureds that adjustment and settlement of a claim is in progress. Any other insured may state its position regarding a claim for insured loss in writing within 15 days after notice of such claim.

B. Proceeds for such insured losses may be made payable by the insurer either jointly to multiple insureds, or to the named insured that purchased the policy in its own right and as fiduciary for other insureds, subject to the requirements of any applicable mortgage clause. A named insured receiving insurance proceeds under the builder's risk and other policies of insurance required by Paragraph 6.05 shall distribute such proceeds in accordance with such agreement as the parties in interest may reach, or as otherwise required under the dispute resolution provisions of this Contract or applicable Laws and Regulations.

C. If no other special agreement is reached, the damaged Work shall be repaired or replaced, the money so received applied on account thereof, and the Work and the cost thereof covered by Change Order, if needed.

ARTICLE 7 – CONTRACTOR'S RESPONSIBILITIES

7.01 *Supervision and Superintendence*

A. Contractor shall supervise, inspect, and direct the Work competently and efficiently, devoting such attention thereto and applying such skills and expertise as may be necessary to perform the Work in accordance with the Contract Documents. Contractor shall be solely responsible for the means, methods, techniques, sequences, and procedures of construction.

B. At all times during the progress of the Work, Contractor shall assign a competent resident superintendent who shall not be replaced without written notice to Owner and Engineer except under extraordinary circumstances.

7.02 *Labor; Working Hours*

A. Contractor shall provide competent, suitably qualified personnel to survey and lay out the Work and perform construction as required by the Contract Documents. Contractor shall at all times maintain good discipline and order at the Site.

B. Except as otherwise required for the safety or protection of persons or the Work or property at the Site or adjacent thereto, and except as otherwise stated in the Contract Documents, all Work at the Site shall be performed during regular working hours, Monday through Friday. Contractor will not perform Work on a Saturday, Sunday, or any legal holiday. Contractor may perform Work outside regular working hours or on Saturdays, Sundays, or legal holidays only with Owner's written consent, which will not be unreasonably withheld.

7.03 *Services, Materials, and Equipment*

A. Unless otherwise specified in the Contract Documents, Contractor shall provide and assume full responsibility for all services, materials, equipment, labor, transportation, construction equipment and machinery, tools, appliances, fuel, power, light, heat, telephone, water, sanitary facilities, temporary facilities, and all other facilities and incidentals necessary for the performance, testing, start up, and completion of the Work, whether or not such items are specifically called for in the Contract Documents.

B. All materials and equipment incorporated into the Work shall be of good quality and new, except as otherwise provided in the Contract Documents. All special warranties and guarantees required by the Specifications shall expressly run to the benefit of Owner. If required by Engineer, Contractor shall furnish satisfactory evidence (including reports of required tests) as to the source, kind, and quality of materials and equipment.

C. All materials and equipment shall be stored, applied, installed, connected, erected, protected, used, cleaned, and conditioned in accordance with instructions of the applicable Supplier, except as otherwise may be provided in the Contract Documents.

7.04 *"Or Equals"*

A. Whenever an item of material or equipment is specified or described in the Contract Documents by using the name of a proprietary item or the name of a particular Supplier, the

Contract Price has been based upon Contractor furnishing such item as specified. The specification or description of such an item is intended to establish the type, function, appearance, and quality required. Unless the specification or description contains or is followed by words reading that no like, equivalent, or "or equal" item is permitted, Contractor may request that Engineer authorize the use of other items of material or equipment, or items from other proposed suppliers under the circumstances described below.

1. If Engineer in its sole discretion determines that an item of material or equipment proposed by Contractor is functionally equal to that named and sufficiently similar so that no change in related Work will be required, Engineer shall deem it an "or equal" item. For the purposes of this paragraph, a proposed item of material or equipment will be considered functionally equal to an item so named if:

    a. in the exercise of reasonable judgment Engineer determines that:

        1) it is at least equal in materials of construction, quality, durability, appearance, strength, and design characteristics;

        2) it will reliably perform at least equally well the function and achieve the results imposed by the design concept of the completed Project as a functioning whole;

        3) it has a proven record of performance and availability of responsive service; and

        4) it is not objectionable to Owner.

    b. Contractor certifies that, if approved and incorporated into the Work:

        1) there will be no increase in cost to the Owner or increase in Contract Times; and

        2) it will conform substantially to the detailed requirements of the item named in the Contract Documents.

B. *Contractor's Expense*: Contractor shall provide all data in support of any proposed "or equal" item at Contractor's expense.

C. *Engineer's Evaluation and Determination*: Engineer will be allowed a reasonable time to evaluate each "or-equal" request. Engineer may require Contractor to furnish additional data about the proposed "or-equal" item. Engineer will be the sole judge of acceptability. No "or-equal" item will be ordered, furnished, installed, or utilized until Engineer's review is complete and Engineer determines that the proposed item is an "or-equal", which will be evidenced by an approved Shop Drawing or other written communication. Engineer will advise Contractor in writing of any negative determination.

D. *Effect of Engineer's Determination*: Neither approval nor denial of an "or-equal" request shall result in any change in Contract Price. The Engineer's denial of an "or-equal" request shall be final and binding, and may not be reversed through an appeal under any provision of the Contract Documents.

E. *Treatment as a Substitution Request*: If Engineer determines that an item of material or equipment proposed by Contractor does not qualify as an "or-equal" item, Contractor may request that Engineer consider~~ed~~ the proposed item as a substitute pursuant to Paragraph 7.05.

7.05 *Substitutes*

A. Unless the specification or description of an item of material or equipment required to be furnished under the Contract Documents contains or is followed by words reading that no substitution is permitted, Contractor may request that Engineer authorize the use of other items of material or equipment under the circumstances described below. To the extent possible such requests shall be made before commencement of related construction at the Site.

    1. Contractor shall submit sufficient information as provided below to allow Engineer to determine if the item of material or equipment proposed is functionally equivalent to that named and an acceptable substitute therefor. Engineer will not accept requests for review of

proposed substitute items of material or equipment from anyone other than Contractor.

2. The requirements for review by Engineer will be as set forth in Paragraph 7.05.B, as supplemented by the Specifications, and as Engineer may decide is appropriate under the circumstances.

3. Contractor shall make written application to Engineer for review of a proposed substitute item of material or equipment that Contractor seeks to furnish or use. The application:

    a. shall certify that the proposed substitute item will:

        1) perform adequately the functions and achieve the results called for by the general design,

        2) be similar in substance to that specified, and

        3) be suited to the same use as that specified.

    b. will state:

        1) the extent, if any, to which the use of the proposed substitute item will necessitate a change in Contract Times,

        2) whether use of the proposed substitute item in the Work will require a change in any of the Contract Documents (or in the provisions of any other direct contract with Owner for other work on the Project) to adapt the design to the proposed substitute item, and

        3) whether incorporation or use of the proposed substitute item in connection with the Work is subject to payment of any license fee or royalty.

    c. will identify:

        1) all variations of the proposed substitute item from that specified, and

        2) available engineering, sales, maintenance, repair, and replacement services.

    d. shall contain an itemized estimate of all costs or credits that will result directly or indirectly from use of such substitute item, including but not limited to changes in Contract Price, shared savings, costs of redesign, and claims of other contractors affected by any resulting change.

B. *Engineer's Evaluation and Determination*: Engineer will be allowed a reasonable time to evaluate each substitute request, and to obtain comments and direction from Owner. Engineer may require Contractor to furnish additional data about the proposed substitute item. Engineer will be the sole judge of acceptability. No substitute will be ordered, furnished, installed, or utilized until Engineer's review is complete and Engineer determines that the proposed item is an acceptable substitute. Engineer's determination will be evidenced by a Field Order or a proposed Change Order accounting for the substitution itself and all related impacts, including changes in Contract Price or Contract Times. Engineer will advise Contractor in writing of any negative determination.

C. *Special Guarantee*: Owner may require Contractor to furnish at Contractor's expense a special performance guarantee or other surety with respect to any substitute.

D. *Reimbursement of Engineer's Cost*: Engineer will record Engineer's costs in evaluating a substitute proposed or submitted by Contractor. Whether or not Engineer approves a substitute so proposed or submitted by Contractor, Contractor shall reimburse Owner for the reasonable charges of Engineer for evaluating each such proposed substitute. Contractor shall also reimburse Owner for the reasonable charges of Engineer for making changes in the Contract Documents (or in the provisions of any other direct contract with Owner) resulting from the acceptance of each proposed substitute.

E. *Contractor's Expense*: Contractor shall provide all data in support of any proposed substitute at Contractor's expense.

F. *Effect of Engineer's Determination*: If Engineer approves the substitution request, Contractor shall execute the proposed Change Order and proceed with the substitution. The Engineer's denial of a substitution request shall be final and binding, and may not be reversed through an appeal under any provision of the Contract Documents. Contractor may challenge the scope of reimbursement costs imposed under Paragraph 7.05.D, by timely submittal of a Change Proposal.

7.06 *Concerning Subcontractors, Suppliers, and Others*

A. Contractor may retain Subcontractors and Suppliers for the performance of parts of the Work. Such Subcontractors and Suppliers must be acceptable to Owner.

B. Contractor shall retain specific Subcontractors, Suppliers, or other individuals or entities for the performance of designated parts of the Work if required by the Contract to do so.

C. Subsequent to the submittal of Contractor's Bid or final negotiation of the terms of the Contract, Owner may not require Contractor to retain any Subcontractor, Supplier, or other individual or entity to furnish or perform any of the Work against which Contractor has reasonable objection.

D. Prior to entry into any binding subcontract or purchase order, Contractor shall submit to Owner the identity of the proposed Subcontractor or Supplier (unless Owner has already deemed such proposed Subcontractor or Supplier acceptable, during the bidding process or otherwise). Such proposed Subcontractor or Supplier shall be deemed acceptable to Owner unless Owner raises a substantive, reasonable objection within five days.

E. Owner may require the replacement of any Subcontractor, Supplier, or other individual or entity retained by Contractor to perform any part of the Work. Owner also may require Contractor to retain specific replacements; provided, however, that Owner may not require a replacement to which Contractor has a reasonable objection. If Contractor has submitted the identity of certain Subcontractors, Suppliers, or other individuals or entities for acceptance by Owner, and Owner has accepted it (either in writing or by failing to make written objection thereto), then Owner may subsequently revoke the acceptance of any such Subcontractor, Supplier, or other individual or entity so identified solely on the basis of substantive, reasonable objection after due investigation. Contractor shall submit an acceptable replacement for the rejected Subcontractor, Supplier, or other individual or entity.

F. If Owner requires the replacement of any Subcontractor, Supplier, or other individual or entity retained by Contractor to perform any part of the Work, then Contractor shall be entitled to an adjustment in Contract Price or Contract Times, or both, with respect to the replacement; and Contractor shall initiate a Change Proposal for such adjustment within 30 days of Owner's requirement of replacement.

G. No acceptance by Owner of any such Subcontractor, Supplier, or other individual or entity, whether initially or as a replacement, shall constitute a waiver of the right of Owner to the completion of the Work in accordance with the Contract Documents.

H. On a monthly basis Contractor shall submit to Engineer a complete list of all Subcontractors and Suppliers having a direct contract with Contractor, and of all other Subcontractors and Suppliers known to Contractor at the time of submittal.

I. Contractor shall be fully responsible to Owner and Engineer for all acts and omissions of the Subcontractors, Suppliers, and other individuals or entities performing or furnishing any of the Work just as Contractor is responsible for Contractor's own acts and omissions.

J. Contractor shall be solely responsible for scheduling and coordinating the work of Subcontractors, Suppliers, and all other individuals or entities performing or furnishing any of the Work.

K. Contractor shall restrict all Subcontractors, Suppliers, and such other individuals or entities performing or furnishing any of the Work from

communicating with Engineer or Owner, except through Contractor or in case of an emergency, or as otherwise expressly allowed herein.

L. The divisions and sections of the Specifications and the identifications of any Drawings shall not control Contractor in dividing the Work among Subcontractors or Suppliers or delineating the Work to be performed by any specific trade.

M. All Work performed for Contractor by a Subcontractor or Supplier shall be pursuant to an appropriate contractual agreement that specifically binds the Subcontractor or Supplier to the applicable terms and conditions of the Contract Documents for the benefit of Owner and Engineer.

N. Owner may furnish to any Subcontractor or Supplier, to the extent practicable, information about amounts paid to Contractor on account of Work performed for Contractor by the particular Subcontractor or Supplier.

O. Nothing in the Contract Documents:

1. shall create for the benefit of any such Subcontractor, Supplier, or other individual or entity any contractual relationship between Owner or Engineer and any such Subcontractor, Supplier, or other individual or entity; nor

2. shall create any obligation on the part of Owner or Engineer to pay or to see to the payment of any money due any such Subcontractor, Supplier, or other individual or entity except as may otherwise be required by Laws and Regulations.

7.07 *Patent Fees and Royalties*

A. Contractor shall pay all license fees and royalties and assume all costs incident to the use in the performance of the Work or the incorporation in the Work of any invention, design, process, product, or device which is the subject of patent rights or copyrights held by others. If a particular invention, design, process, product, or device is specified in the Contract Documents for use in the performance of the Work and if, to the actual knowledge of Owner or Engineer, its use is subject to patent rights or copyrights calling for the payment of any license fee or royalty to others, the existence of such rights shall be disclosed by Owner in the Contract Documents.

B. To the fullest extent permitted by Laws and Regulations, Owner shall indemnify and hold harmless Contractor, and its officers, directors, members, partners, employees, agents, consultants, and subcontractors from and against all claims, costs, losses, and damages (including but not limited to all fees and charges of engineers, architects, attorneys, and other professionals, and all court or arbitration or other dispute resolution costs) arising out of or relating to any infringement of patent rights or copyrights incident to the use in the performance of the Work or resulting from the incorporation in the Work of any invention, design, process, product, or device specified in the Contract Documents, but not identified as being subject to payment of any license fee or royalty to others required by patent rights or copyrights. Notwithstanding anything stated herein to the contrary, this Paragraph 7.07.B is not intended to and shall not be construed to waive any immunity from or limitation of liability that Owner is entitled to under the doctrine of sovereign immunity or section 768.28, Florida Statutes.

C. To the fullest extent permitted by Laws and Regulations, Contractor shall indemnify and hold harmless Owner and Engineer, and the officers, directors, members, partners, employees, agents, consultants and subcontractors of each and any of them from and against all claims, costs, losses, and damages (including but not limited to all fees and charges of engineers, architects, attorneys, and other professionals and all court or arbitration or other dispute resolution costs) arising out of or relating to any infringement of patent rights or copyrights incident to the use in the performance of the Work or resulting from the incorporation in the Work of any invention, design, process, product, or device not specified in the Contract Documents.

7.08 *Permits*

A. Unless otherwise provided in the Contract Documents, Contractor shall obtain and pay for all construction permits and licenses. Owner shall assist Contractor, when necessary, in

obtaining such permits and licenses. Contractor shall pay all governmental charges and inspection fees necessary for the prosecution of the Work which are applicable at the time of the submission of Contractor's Bid (or when Contractor became bound under a negotiated contract). Owner shall pay all charges of utility owners for connections for providing permanent service to the Work.

7.09 *Taxes*

A. Contractor shall pay all sales, consumer, use, and other similar taxes required to be paid by Contractor in accordance with the Laws and Regulations of the place of the Project which are applicable during the performance of the Work.

7.10 *Laws and Regulations*

A. Contractor shall give all notices required by and shall comply with all Laws and Regulations applicable to the performance of the Work. Except where otherwise expressly required by applicable Laws and Regulations, neither Owner nor Engineer shall be responsible for monitoring Contractor's compliance with any Laws or Regulations.

B. If Contractor performs any Work or takes any other action knowing or having reason to know that it is contrary to Laws or Regulations, Contractor shall bear all resulting costs and losses, and shall indemnify and hold harmless Owner and Engineer, and the officers, directors, members, partners, employees, agents, consultants, and subcontractors of each and any of them from and against all claims, costs, losses, and damages (including but not limited to all fees and charges of engineers, architects, attorneys, and other professionals and all court or arbitration or other dispute resolution costs) arising out of or relating to such Work or other action. It shall not be Contractor's responsibility to make certain that the Work described in the Contract Documents is in accordance with Laws and Regulations, but this shall not relieve Contractor of Contractor's obligations under Paragraph 3.03.

C. Owner or Contractor may give notice to the other party of any changes after the submission of Contractor's Bid (or after the date when Contractor became bound under a negotiated contract) in Laws or Regulations having an effect on the cost or time of performance of the Work, including but not limited to changes in Laws or Regulations having an effect on procuring permits and on sales, use, value-added, consumption, and other similar taxes. If Owner and Contractor are unable to agree on entitlement to or on the amount or extent, if any, of any adjustment in Contract Price or Contract Times resulting from such changes, then within 30 days of such notice Contractor may submit a Change Proposal, or Owner may initiate a Claim.

7.11 *Record Documents*

A. Contractor shall maintain in a safe place at the Site one printed record copy of all Drawings, Specifications, Addenda, Change Orders, Work Change Directives, Field Orders, written interpretations and clarifications, and approved Shop Drawings. Contractor shall keep such record documents in good order and annotate them to show changes made during construction. These record documents, together with all approved Samples, will be available to Engineer for reference. Upon completion of the Work, Contractor shall deliver these record documents to Engineer.

7.12 *Safety and Protection*

A. Contractor shall be solely responsible for initiating, maintaining, and supervising all safety precautions and programs in connection with the Work. Such responsibility does not relieve Subcontractors of their responsibility for the safety of persons or property in the performance of their work, nor for compliance with applicable safety Laws and Regulations. Contractor shall take all necessary precautions for the safety of, and shall provide the necessary protection to prevent damage, injury, or loss to:

1. all persons on the Site or who may be affected by the Work;

2. all the Work and materials and equipment to be incorporated therein, whether in storage on or off the Site; and

3. other property at the Site or adjacent thereto, including trees, shrubs, lawns, walks, pavements, roadways, structures, other work in progress, utilities, and

Underground Facilities not designated for removal, relocation, or replacement in the course of construction.

B. Contractor shall comply with all applicable Laws and Regulations relating to the safety of persons or property, or to the protection of persons or property from damage, injury, or loss; and shall erect and maintain all necessary safeguards for such safety and protection. Contractor shall notify Owner; the owners of adjacent property, Underground Facilities, and other utilities; and other contractors and utility owners performing work at or adjacent to the Site, when prosecution of the Work may affect them, and shall cooperate with them in the protection, removal, relocation, and replacement of their property or work in progress.

C. Contractor shall comply with the applicable requirements of Owner's safety programs, if any. The Supplementary Conditions identify any Owner's safety programs that are applicable to the Work.

D. Contractor shall inform Owner and Engineer of the specific requirements of Contractor's safety program with which Owner's and Engineer's employees and representatives must comply while at the Site.

E. All damage, injury, or loss to any property referred to in Paragraph 7.12.A.2 or 7.12.A.3 caused, directly or indirectly, in whole or in part, by Contractor, any Subcontractor, Supplier, or any other individual or entity directly or indirectly employed by any of them to perform any of the Work, or anyone for whose acts any of them may be liable, shall be remedied by Contractor at its expense (except damage or loss attributable to the fault of Drawings or Specifications or to the acts or omissions of Owner or Engineer or anyone employed by any of them, or anyone for whose acts any of them may be liable, and not attributable, directly or indirectly, in whole or in part, to the fault or negligence of Contractor or any Subcontractor, Supplier, or other individual or entity directly or indirectly employed by any of them).

F. Contractor's duties and responsibilities for safety and protection shall continue until such time as all the Work is completed and Engineer has issued a notice to Owner and Contractor in accordance with Paragraph 15.06.B that the Work is acceptable (except as otherwise expressly provided in connection with Substantial Completion).

G. Contractor's duties and responsibilities for safety and protection shall resume whenever Contractor or any Subcontractor or Supplier returns to the Site to fulfill warranty or correction obligations, or to conduct other tasks arising from the Contract Documents.

7.13 *Safety Representative*

A. Contractor shall designate a qualified and experienced safety representative at the Site whose duties and responsibilities shall be the prevention of accidents and the maintaining and supervising of safety precautions and programs.

7.14 *Hazard Communication Programs*

A. Contractor shall be responsible for coordinating any exchange of material safety data sheets or other hazard communication information required to be made available to or exchanged between or among employers at the Site in accordance with Laws or Regulations.

7.15 *Emergencies*

A. In emergencies affecting the safety or protection of persons or the Work or property at the Site or adjacent thereto, Contractor is obligated to act to prevent threatened damage, injury, or loss. Contractor shall give Engineer prompt written notice if Contractor believes that any significant changes in the Work or variations from the Contract Documents have been caused thereby or are required as a result thereof. If Engineer determines that a change in the Contract Documents is required because of the action taken by Contractor in response to such an emergency, a Work Change Directive or Change Order will be issued.

7.16 *Shop Drawings, Samples, and Other Submittals*

A. *Shop Drawing and Sample Submittal Requirements*:

1. Before submitting a Shop Drawing or Sample, Contractor shall have:

a. reviewed and coordinated the Shop Drawing or Sample with other Shop

Drawings and Samples and with the requirements of the Work and the Contract Documents;

b. determined and verified all field measurements, quantities, dimensions, specified performance and design criteria, installation requirements, materials, catalog numbers, and similar information with respect thereto;

c. determined and verified the suitability of all materials and equipment offered with respect to the indicated application, fabrication, shipping, handling, storage, assembly, and installation pertaining to the performance of the Work; and

d. determined and verified all information relative to Contractor's responsibilities for means, methods, techniques, sequences, and procedures of construction, and safety precautions and programs incident thereto.

2. Each submittal shall bear a stamp or specific written certification that Contractor has satisfied Contractor's obligations under the Contract Documents with respect to Contractor's review of that submittal, and that Contractor approves the submittal.

3. With each submittal, Contractor shall give Engineer specific written notice of any variations that the Shop Drawing or Sample may have from the requirements of the Contract Documents. This notice shall be set forth in a written communication separate from the Shop Drawings or Sample submittal; and, in addition, in the case of Shop Drawings by a specific notation made on each Shop Drawing submitted to Engineer for review and approval of each such variation.

B. *Submittal Procedures for Shop Drawings and Samples*: Contractor shall submit Shop Drawings and Samples to Engineer for review and approval in accordance with the accepted Schedule of Submittals. Each submittal will be identified as Engineer may require.

1. *Shop Drawings*:

a. Contractor shall submit the number of copies required in the Specifications.

b. Data shown on the Shop Drawings will be complete with respect to quantities, dimensions, specified performance and design criteria, materials, and similar data to show Engineer the services, materials, and equipment Contractor proposes to provide and to enable Engineer to review the information for the limited purposes required by Paragraph 7.16.D.

2. *Samples*:

a. Contractor shall submit the number of Samples required in the Specifications.

b. Contractor shall clearly identify each Sample as to material, Supplier, pertinent data such as catalog numbers, the use for which intended and other data as Engineer may require to enable Engineer to review the submittal for the limited purposes required by Paragraph 7.16.D.

3. Where a Shop Drawing or Sample is required by the Contract Documents or the Schedule of Submittals, any related Work performed prior to Engineer's review and approval of the pertinent submittal will be at the sole expense and responsibility of Contractor.

C. *Other Submittals*: Contractor shall submit other submittals to Engineer in accordance with the accepted Schedule of Submittals, and pursuant to the applicable terms of the Specifications.

D. *Engineer's Review*:

1. Engineer will provide timely review of Shop Drawings and Samples in accordance with the Schedule of Submittals acceptable to Engineer. Engineer's review and approval will be only to determine if the items covered by the submittals will, after installation or incorporation in the Work, conform to the information given in the Contract Documents and be compatible with the design concept of the completed

Project as a functioning whole as indicated by the Contract Documents.

2. Engineer's review and approval will not extend to means, methods, techniques, sequences, or procedures of construction or to safety precautions or programs incident thereto.

3. Engineer's review and approval of a separate item as such will not indicate approval of the assembly in which the item functions.

4. Engineer's review and approval of a Shop Drawing or Sample shall not relieve Contractor from responsibility for any variation from the requirements of the Contract Documents unless Contractor has complied with the requirements of Paragraph 7.16.A.3 and Engineer has given written approval of each such variation by specific written notation thereof incorporated in or accompanying the Shop Drawing or Sample. Engineer will document any such approved variation from the requirements of the Contract Documents in a Field Order.

5. Engineer's review and approval of a Shop Drawing or Sample shall not relieve Contractor from responsibility for complying with the requirements of Paragraph 7.16.A and B.

6. Engineer's review and approval of a Shop Drawing or Sample, or of a variation from the requirements of the Contract Documents, shall not, under any circumstances, change the Contract Times or Contract Price, unless such changes are included in a Change Order.

7. Neither Engineer's receipt, review, acceptance or approval of a Shop Drawing, Sample, or other submittal shall result in such item becoming a Contract Document.

8. Contractor shall perform the Work in compliance with the requirements and commitments set forth in approved Shop Drawings and Samples, subject to the provisions of Paragraph 7.16.D.4.

E. *Resubmittal Procedures*:

1. Contractor shall make corrections required by Engineer and shall return the required number of corrected copies of Shop Drawings and submit, as required, new Samples for review and approval. Contractor shall direct specific attention in writing to revisions other than the corrections called for by Engineer on previous submittals.

2. Contractor shall furnish required submittals with sufficient information and accuracy to obtain required approval of an item with no more than three submittals. Engineer will record Engineer's time for reviewing a fourth or subsequent submittal of a Shop Drawings, sample, or other item requiring approval, and Contractor shall be responsible for Engineer's charges to Owner for such time. Owner may impose a set-off against payments due to Contractor to secure reimbursement for such charges.

3. If Contractor requests a change of a previously approved submittal item, Contractor shall be responsible for Engineer's charges to Owner for its review time, and Owner may impose a set-off against payments due to Contractor to secure reimbursement for such charges, unless the need for such change is beyond the control of Contractor.

7.17 *Contractor's General Warranty and Guarantee*

A. Contractor warrants and guarantees to Owner that all Work will be in accordance with the Contract Documents and will not be defective. Engineer and its officers, directors, members, partners, employees, agents, consultants, and subcontractors shall be entitled to rely on Contractor's warranty and guarantee.

B. Contractor's warranty and guarantee hereunder excludes defects or damage caused by:

1. abuse, modification, or improper maintenance or operation by persons other than Contractor, Subcontractors, Suppliers, or any other individual or entity for whom Contractor is responsible; or

2. normal wear and tear under normal usage.

C. Contractor's obligation to perform and complete the Work in accordance with the Contract Documents shall be absolute. None of the following will constitute an acceptance of Work that is not in accordance with the Contract Documents or a release of Contractor's obligation to perform the Work in accordance with the Contract Documents:

1. observations by Engineer;
2. recommendation by Engineer or payment by Owner of any progress or final payment;
3. the issuance of a certificate of Substantial Completion by Engineer or any payment related thereto by Owner;
4. use or occupancy of the Work or any part thereof by Owner;
5. any review and approval of a Shop Drawing or Sample submittal;
6. the issuance of a notice of acceptability by Engineer;
7. any inspection, test, or approval by Owner, Owner's representatives, or others; or
8. any correction of defective Work by Owner.

D. If the Contract requires the Contractor to accept the assignment of a contract entered into by Owner, then the specific warranties, guarantees, and correction obligations contained in the assigned contract shall govern with respect to Contractor's performance obligations to Owner for the Work described in the assigned contract.

7.18 *Indemnification*

A. To the fullest extent permitted by law, Contractor shall indemnify, defend, and hold harmless the City, its elected officials, officers, and employees, from any and all liabilities, damages, losses and costs, including but not limited to reasonable attorney's fees, to the extent caused by the negligence, recklessness, or intentionally wrongful conduct of Contractor, its employees, agents, officers, subcontractors and other persons employed or utilized by Contractor in the performance of this Agreement. It is further the specific intent and agreement of the parties that all the contract documents of any project for which Contractor provided services be hereby amended to include the foregoing indemnification. Contractor expressly agrees that it will not claim, and waives any claim, that this article violates section 725.06, Florida Statutes, or is unenforceable pursuant to section 725.06, Florida Statutes. This indemnification obligation shall not be construed to negate, abridge, or otherwise reduce any other right or obligation of indemnity which would otherwise exist as to any party or person described in this section. This indemnification provision shall include claims made by an employee of Contractor or any subcontractor against the City and Contractor waives any entitlement to immunity under section 440.11, Florida Statutes. Nothing contained herein shall be construed as a waiver of any immunity or limitation of liability the City may be entitled to under the doctrine of sovereign immunity or section 768.28, Florida Statutes. This indemnification provision shall survive the termination of this Agreement however terminated. Contractor's obligation to indemnify, defend, and hold harmless shall not be limited by the amount of any insurance required to be obtained or maintained under the Contract Documents. Notwithstanding the foregoing, the Contractor's obligations to indemnify, defend and hold harmless shall be limited to one million dollars ($1,000,000) or the Contract Price, whichever is greater, in accordance with section 725.06, Florida Statutes. ~~Contractor shall indemnify and hold harmless Owner and Engineer, and the officers, directors, members, partners, employees, agents, consultants and subcontractors of each and any of them from and against all claims, costs, losses, and damages (including but not limited to all fees and charges of engineers, architects, attorneys, and other professionals and all court or arbitration or other dispute resolution costs) arising out of or relating to the performance of the Work, provided that any such claim, cost, loss, or damage is attributable to bodily injury, sickness, disease, or death, or to injury to or destruction of tangible property (other than the Work itself), including the loss of use resulting therefrom but only to the extent caused by any negligent act or omission of Contractor, any Subcontractor, any Supplier, or any individual or entity directly or indirectly employed by any of~~

~~them to perform any of the Work or anyone for whose acts any of them may be liable.~~

B. In any and all claims against Owner or Engineer or any of their officers, directors, members, partners, employees, agents, consultants, or subcontractors by any employee (or the survivor or personal representative of such employee) of Contractor, any Subcontractor, any Supplier, or any individual or entity directly or indirectly employed by any of them to perform any of the Work, or anyone for whose acts any of them may be liable, the indemnification obligation under Paragraph 7.18.A shall not be limited in any way by any limitation on the amount or type of damages, compensation, or benefits payable by or for Contractor or any such Subcontractor, Supplier, or other individual or entity under workers' compensation acts, disability benefit acts, or other employee benefit acts.

C. The indemnification obligations of Contractor under Paragraph 7.18.A shall not extend to the liability of Engineer and Engineer's officers, directors, members, partners, employees, agents, consultants and subcontractors arising out of:

1. the preparation or approval of, or the failure to prepare or approve maps, Drawings, opinions, reports, surveys, Change Orders, designs, or Specifications; or

2. giving directions or instructions, or failing to give them, if that is the primary cause of the injury or damage.

7.19 *Delegation of Professional Design Services*

A. Contractor will not be required to provide professional design services unless such services are specifically required by the Contract Documents for a portion of the Work or unless such services are required to carry out Contractor's responsibilities for construction means, methods, techniques, sequences and procedures. Contractor shall not be required to provide professional services in violation of applicable Laws and Regulations.

B. If professional design services or certifications by a design professional related to systems, materials, or equipment are specifically required of Contractor by the Contract Documents, Owner and Engineer will specify all performance and design criteria that such services must satisfy. Contractor shall cause such services or certifications to be provided by a properly licensed professional, whose signature and seal shall appear on all drawings, calculations, specifications, certifications, and other submittals prepared by such professional. Shop Drawings and other submittals related to the Work designed or certified by such professional, if prepared by others, shall bear such professional's written approval when submitted to Engineer.

C. Owner and Engineer shall be entitled to rely upon the adequacy, accuracy, and completeness of the services, certifications, or approvals performed by such design professionals, provided Owner and Engineer have specified to Contractor all performance and design criteria that such services must satisfy.

D. Pursuant to this paragraph, Engineer's review and approval of design calculations and design drawings will be only for the limited purpose of checking for conformance with performance and design criteria given and the design concept expressed in the Contract Documents. Engineer's review and approval of Shop Drawings and other submittals (except design calculations and design drawings) will be only for the purpose stated in Paragraph 7.16.D.1.

E. Contractor shall not be responsible for the adequacy of the performance or design criteria specified by Owner or Engineer.

ARTICLE 8 – OTHER WORK AT THE SITE

8.01 *Other Work*

A. In addition to and apart from the Work under the Contract Documents, the Owner may perform other work at or adjacent to the Site. Such other work may be performed by Owner's employees, or through contracts between the Owner and third parties. Owner may also arrange to have third-party utility owners perform work on their utilities and facilities at or adjacent to the Site.

B. If Owner performs other work at or adjacent to the Site with Owner's employees, or through contracts for such other work, then Owner shall

give Contractor written notice thereof prior to starting any such other work. If Owner has advance information regarding the start of any utility work at or adjacent to the Site, Owner shall provide such information to Contractor.

C. Contractor shall afford each other contractor that performs such other work, each utility owner performing other work, and Owner, if Owner is performing other work with Owner's employees, proper and safe access to the Site, and provide a reasonable opportunity for the introduction and storage of materials and equipment and the execution of such other work. Contractor shall do all cutting, fitting, and patching of the Work that may be required to properly connect or otherwise make its several parts come together and properly integrate with such other work. Contractor shall not endanger any work of others by cutting, excavating, or otherwise altering such work; provided, however, that Contractor may cut or alter others' work with the written consent of Engineer and the others whose work will be affected.

D. If the proper execution or results of any part of Contractor's Work depends upon work performed by others under this Article 8, Contractor shall inspect such other work and promptly report to Engineer in writing any delays, defects, or deficiencies in such other work that render it unavailable or unsuitable for the proper execution and results of Contractor's Work. Contractor's failure to so report will constitute an acceptance of such other work as fit and proper for integration with Contractor's Work except for latent defects and deficiencies in such other work.

8.02 *Coordination*

A. If Owner intends to contract with others for the performance of other work at or adjacent to the Site, to perform other work at or adjacent to the Site with Owner's employees, or to arrange to have utility owners perform work at or adjacent to the Site, the following will be set forth in the Supplementary Conditions or provided to Contractor prior to the start of any such other work:

1. the identity of the individual or entity that will have authority and responsibility for coordination of the activities among the various contractors;

2. an itemization of the specific matters to be covered by such authority and responsibility; and

3. the extent of such authority and responsibilities.

B. Unless otherwise provided in the Supplementary Conditions, Owner shall have sole authority and responsibility for such coordination.

8.03 *Legal Relationships*

A. If, in the course of performing other work at or adjacent to the Site for Owner, the Owner's employees, any other contractor working for Owner, or any utility owner for whom the Owner is responsible causes damage to the Work or to the property of Contractor or its Subcontractors, or delays, disrupts, interferes with, or increases the scope or cost of the performance of the Work, through actions or inaction, then Contractor shall be entitled to an equitable adjustment in the Contract Price or the Contract Times, or both. Contractor must submit any Change Proposal seeking an equitable adjustment in the Contract Price or the Contract Times under this paragraph within 30 days of the damaging, delaying, disrupting, or interfering event. The entitlement to, and extent of, any such equitable adjustment shall take into account information (if any) regarding such other work that was provided to Contractor in the Contract Documents prior to the submittal of the Bid or the final negotiation of the terms of the Contract. When applicable, any such equitable adjustment in Contract Price shall be conditioned on Contractor assigning to Owner all Contractor's rights against such other contractor or utility owner with respect to the damage, delay, disruption, or interference that is the subject of the adjustment. Contractor's entitlement to an adjustment of the Contract Times is conditioned on such adjustment being essential to Contractor's ability to complete the Work within the Contract Times.

B. Contractor shall take reasonable and customary measures to avoid damaging, delaying,

disrupting, or interfering with the work of Owner, any other contractor, or any utility owner performing other work at or adjacent to the Site. If Contractor fails to take such measures and as a result damages, delays, disrupts, or interferes with the work of any such other contractor or utility owner, then Owner may impose a set-off against payments due to Contractor, and assign to such other contractor or utility owner the Owner's contractual rights against Contractor with respect to the breach of the obligations set forth in this paragraph.

C. When Owner is performing other work at or adjacent to the Site with Owner's employees, Contractor shall be liable to Owner for damage to such other work, and for the reasonable direct delay, disruption, and interference costs incurred by Owner as a result of Contractor's failure to take reasonable and customary measures with respect to Owner's other work. In response to such damage, delay, disruption, or interference, Owner may impose a set-off against payments due to Contractor.

D. If Contractor damages, delays, disrupts, or interferes with the work of any other contractor, or any utility owner performing other work at or adjacent to the Site, through Contractor's failure to take reasonable and customary measures to avoid such impacts, or if any claim arising out of Contractor's actions, inactions, or negligence in performance of the Work at or adjacent to the Site is made by any such other contractor or utility owner against Contractor, Owner, or Engineer, then Contractor shall (1) promptly attempt to settle the claim as to all parties through negotiations with such other contractor or utility owner, or otherwise resolve the claim by arbitration or other dispute resolution proceeding or at law, and (2) indemnify, defend, and hold harmless Owner and Engineer, and the officers, directors, members, partners, employees, agents, consultants and subcontractors of each and any of them from and against any such claims, and against all costs, losses, and damages (including but not limited to all fees and charges of engineers, architects, attorneys, and other professionals and all court or arbitration or other dispute resolution costs) arising out of or relating to such damage, delay, disruption, or interference.

ARTICLE 9 – OWNER'S RESPONSIBILITIES

9.01 *Communications to Contractor*

A. Except as otherwise provided in these General Conditions, Owner shall issue all communications to Contractor through Engineer.

9.02 *Replacement of Engineer*

A. Owner may at its discretion appoint an engineer to replace Engineer, provided Contractor makes no reasonable objection to the replacement engineer. The replacement engineer's status under the Contract Documents shall be that of the former Engineer.

9.03 *Furnish Data*

A. Owner shall promptly furnish the data required of Owner under the Contract Documents.

9.04 *Pay When Due*

A. Owner shall make payments to Contractor when they are due as provided in the Agreement.

9.05 *Lands and Easements; Reports, Tests, and Drawings*

A. Owner's duties with respect to providing lands and easements are set forth in Paragraph 5.01.

B. Owner's duties with respect to providing engineering surveys to establish reference points are set forth in Paragraph 4.03.

C. Article 5 refers to Owner's identifying and making available to Contractor copies of reports of explorations and tests of conditions at the Site, and drawings of physical conditions relating to existing surface or subsurface structures at the Site.

9.06 ~~*Insurance*~~ [Deleted.]

9.07 *Change Orders*

A. Owner's responsibilities with respect to Change Orders are set forth in Article 11.

9.08 *Inspections, Tests, and Approvals*

A. Owner's responsibility with respect to certain inspections, tests, and approvals is set forth in Paragraph 14.02.B.

9.09 *Limitations on Owner's Responsibilities*

A. The Owner shall not supervise, direct, or have control or authority over, nor be responsible for,

Contractor's means, methods, techniques, sequences, or procedures of construction, or the safety precautions and programs incident thereto, or for any failure of Contractor to comply with Laws and Regulations applicable to the performance of the Work. Owner will not be responsible for Contractor's failure to perform the Work in accordance with the Contract Documents.

9.10 *Undisclosed Hazardous Environmental Condition*

A. Owner's responsibility in respect to an undisclosed Hazardous Environmental Condition is set forth in Paragraph 5.06.

9.11 *Evidence of Financial Arrangements*

A. Upon request of Contractor, Owner shall furnish Contractor reasonable evidence that financial arrangements have been made to satisfy Owner's obligations under the Contract Documents (including obligations under proposed changes in the Work).

9.12 *Safety Programs*

A. While at the Site, Owner's employees and representatives shall comply with the specific applicable requirements of Contractor's safety programs of which Owner has been informed.

B. Owner shall furnish copies of any applicable Owner safety programs to Contractor.

ARTICLE 10 – ENGINEER'S STATUS DURING CONSTRUCTION

10.01 *Owner's Representative*

A. Engineer will be Owner's representative during the construction period. The duties and responsibilities and the limitations of authority of Engineer as Owner's representative during construction are set forth in the Contract.

10.02 *Visits to Site*

A. Engineer will make visits to the Site at intervals appropriate to the various stages of construction as Engineer deems necessary in order to observe as an experienced and qualified design professional the progress that has been made and the quality of the various aspects of Contractor's executed Work. Based on information obtained during such visits and observations, Engineer, for the benefit of Owner, will determine, in general, if the Work is proceeding in accordance with the Contract Documents. Engineer will not be required to make exhaustive or continuous inspections on the Site to check the quality or quantity of the Work. Engineer's efforts will be directed toward providing for Owner a greater degree of confidence that the completed Work will conform generally to the Contract Documents. On the basis of such visits and observations, Engineer will keep Owner informed of the progress of the Work and will endeavor to guard Owner against defective Work.

B. Engineer's visits and observations are subject to all the limitations on Engineer's authority and responsibility set forth in Paragraph 10.08. Particularly, but without limitation, during or as a result of Engineer's visits or observations of Contractor's Work, Engineer will not supervise, direct, control, or have authority over or be responsible for Contractor's means, methods, techniques, sequences, or procedures of construction, or the safety precautions and programs incident thereto, or for any failure of Contractor to comply with Laws and Regulations applicable to the performance of the Work.

10.03 *Project Representative*

A. If Owner and Engineer have agreed that Engineer will furnish a Resident Project Representative to represent Engineer at the Site and assist Engineer in observing the progress and quality of the Work, then the authority and responsibilities of any such Resident Project Representative will be as provided in the Supplementary Conditions, and limitations on the responsibilities thereof will be as provided in Paragraph 10.08. If Owner designates another representative or agent to represent Owner at the Site who is not Engineer's consultant, agent, or employee, the responsibilities and authority and limitations thereon of such other individual or entity will be as provided in the Supplementary Conditions.

10.04 *Rejecting Defective Work*

A. Engineer has the authority to reject Work in accordance with Article 14.

10.05 *Shop Drawings, Change Orders and Payments*

A. Engineer's authority, and limitations thereof, as to Shop Drawings and Samples, are set forth in Paragraph 7.16.

B. Engineer's authority, and limitations thereof, as to design calculations and design drawings submitted in response to a delegation of professional design services, if any, are set forth in Paragraph 7.19.

C. Engineer's authority as to Change Orders is set forth in Article 11.

D. Engineer's authority as to Applications for Payment is set forth in Article 15.

10.06 *Determinations for Unit Price Work*

A. Engineer will determine the actual quantities and classifications of Unit Price Work performed by Contractor as set forth in Paragraph 13.03.

10.07 *Decisions on Requirements of Contract Documents and Acceptability of Work*

A. Engineer will render decisions regarding the requirements of the Contract Documents, and judge the acceptability of the Work, pursuant to the specific procedures set forth herein for initial interpretations, Change Proposals, and acceptance of the Work. In rendering such decisions and judgments, Engineer will not show partiality to Owner or Contractor, and will not be liable to Owner, Contractor, or others in connection with any proceedings, interpretations, decisions, or judgments conducted or rendered in good faith.

10.08 *Limitations on Engineer's Authority and Responsibilities*

A. Neither Engineer's authority or responsibility under this Article 10 or under any other provision of the Contract, nor any decision made by Engineer in good faith either to exercise or not exercise such authority or responsibility or the undertaking, exercise, or performance of any authority or responsibility by Engineer, shall create, impose, or give rise to any duty in contract, tort, or otherwise owed by Engineer to Contractor, any Subcontractor, any Supplier, any other individual or entity, or to any surety for or employee or agent of any of them.

B. Engineer will not supervise, direct, control, or have authority over or be responsible for Contractor's means, methods, techniques, sequences, or procedures of construction, or the safety precautions and programs incident thereto, or for any failure of Contractor to comply with Laws and Regulations applicable to the performance of the Work. Engineer will not be responsible for Contractor's failure to perform the Work in accordance with the Contract Documents.

C. Engineer will not be responsible for the acts or omissions of Contractor or of any Subcontractor, any Supplier, or of any other individual or entity performing any of the Work.

D. Engineer's review of the final Application for Payment and accompanying documentation and all maintenance and operating instructions, schedules, guarantees, bonds, certificates of inspection, tests and approvals, and other documentation required to be delivered by Paragraph 15.06.A will only be to determine generally that their content complies with the requirements of, and in the case of certificates of inspections, tests, and approvals, that the results certified indicate compliance with the Contract Documents.

E. The limitations upon authority and responsibility set forth in this Paragraph 10.08 shall also apply to the Resident Project Representative, if any.

10.09 *Compliance with Safety Program*

A. While at the Site, Engineer's employees and representatives will comply with the specific applicable requirements of Owner's and Contractor's safety programs (if any) of which Engineer has been informed.

ARTICLE 11 – AMENDING THE CONTRACT DOCUMENTS; CHANGES IN THE WORK

11.01 *Amending and Supplementing Contract Documents*

A. The Contract Documents may be amended or supplemented by a Change Order, a Work Change Directive, or a Field Order.

1. *Change Orders*:

a. If an amendment or supplement to the Contract Documents includes a change

in the Contract Price or the Contract Times, such amendment or supplement must be set forth in a Change Order. A Change Order also may be used to establish amendments and supplements of the Contract Documents that do not affect the Contract Price or Contract Times.

b. Owner and Contractor may amend those terms and conditions of the Contract Documents that do not involve (1) the performance or acceptability of the Work, (2) the design (as set forth in the Drawings, Specifications, or otherwise), or (3) other engineering or technical matters, without the recommendation of the Engineer. Such an amendment shall be set forth in a Change Order.

2. *Work Change Directives*: A Work Change Directive will not change the Contract Price or the Contract Times but is evidence that the parties expect that the modification ordered or documented by a Work Change Directive will be incorporated in a subsequently issued Change Order, following negotiations by the parties as to the Work Change Directive's effect, if any, on the Contract Price and Contract Times; or, if negotiations are unsuccessful, by a determination under the terms of the Contract Documents governing adjustments, expressly including Paragraph 11.04 regarding change of Contract Price. Contractor must submit any Change Proposal seeking an adjustment of the Contract Price or the Contract Times, or both, no later than 30 days after the completion of the Work set out in the Work Change Directive. Owner must submit any Claim seeking an adjustment of the Contract Price or the Contract Times, or both, no later than 60 days after issuance of the Work Change Directive.

3. *Field Orders*: Engineer may authorize minor changes in the Work if the changes do not involve an adjustment in the Contract Price or the Contract Times and are compatible with the design concept of the completed Project as a functioning whole as indicated by the Contract Documents. Such changes will be accomplished by a Field Order and will be binding on Owner and also on Contractor, which shall perform the Work involved promptly. If Contractor believes that a Field Order justifies an adjustment in the Contract Price or Contract Times, or both, then before proceeding with the Work at issue, Contractor shall submit a Change Proposal as provided herein.

11.02 *Owner-Authorized Changes in the Work*

A. Without invalidating the Contract and without notice to any surety, Owner may, at any time or from time to time, order additions, deletions, or revisions in the Work. Such changes shall be supported by Engineer's recommendation, to the extent the change involves the design (as set forth in the Drawings, Specifications, or otherwise), or other engineering or technical matters. Such changes may be accomplished by a Change Order, if Owner and Contractor have agreed as to the effect, if any, of the changes on Contract Times or Contract Price; or by a Work Change Directive. Upon receipt of any such document, Contractor shall promptly proceed with the Work involved; or, in the case of a deletion in the Work, promptly cease construction activities with respect to such deleted Work. Added or revised Work shall be performed under the applicable conditions of the Contract Documents. Nothing in this paragraph shall obligate Contractor to undertake work that Contractor reasonably concludes cannot be performed in a manner consistent with Contractor's safety obligations under the Contract Documents or Laws and Regulations.

11.03 *Unauthorized Changes in the Work*

A. Contractor shall not be entitled to an increase in the Contract Price or an extension of the Contract Times with respect to any work performed that is not required by the Contract Documents, as amended, modified, or supplemented, except in the case of an emergency as provided in Paragraph 7.15 or in the case of uncovering Work as provided in Paragraph 14.05.

11.04 *Change of Contract Price*

A. The Contract Price may only be changed by a Change Order. Any Change Proposal for an adjustment in the Contract Price shall comply with the provisions of Paragraph 11.06. Any Claim for an adjustment of Contract Price shall comply with the provisions of Article 12.

B. An adjustment in the Contract Price will be determined as follows:

1. where the Work involved is covered by unit prices contained in the Contract Documents, then by application of such unit prices to the quantities of the items involved (subject to the provisions of Paragraph 13.03); or

2. where the Work involved is not covered by unit prices contained in the Contract Documents, then by a mutually agreed lump sum (which may include an allowance for overhead and profit not necessarily in accordance with Paragraph 11.04.C.2); or

3. where the Work involved is not covered by unit prices contained in the Contract Documents and the parties do not reach mutual agreement to a lump sum, then on the basis of the Cost of the Work (determined as provided in Paragraph 13.01) plus a Contractor's fee for overhead and profit (determined as provided in Paragraph 11.04.C).

C. *Contractor's Fee*: When applicable, the Contractor's fee for overhead and profit shall be determined as follows:

1. a mutually acceptable fixed fee; or

2. if a fixed fee is not agreed upon, then a fee based on the following percentages of the various portions of the Cost of the Work:

a. for costs incurred under Paragraphs 13.01.B.1 and 13.01.B.2, the Contractor's fee shall be 10 ~~15~~ percent;

b. for costs incurred under Paragraph 13.01.B.3, the Contractor's fee shall be five percent;

c. where one or more tiers of subcontracts are on the basis of Cost of the Work plus a fee and no fixed fee is agreed upon, the intent of Paragraphs 11.04.C.2.a and 11.04.C.2.b is that the Contractor's fee shall be based on: (1) a fee of 10 ~~15~~ percent of the costs incurred under Paragraphs 13.01.A.1 and 13.01.A.2 by the Subcontractor that actually performs the Work, at whatever tier, and (2) with respect to Contractor itself and to any Subcontractors of a tier higher than that of the Subcontractor that actually performs the Work, a fee of five percent of the amount (fee plus underlying costs incurred) attributable to the next lower tier Subcontractor; provided, however, that for any such subcontracted work the maximum total fee to be paid by Owner shall be no greater than 27 percent of the costs incurred by the Subcontractor that actually performs the work;

d. no fee shall be payable on the basis of costs itemized under Paragraphs 13.01.B.4, 13.01.B.5, and 13.01.C;

e. the amount of credit to be allowed by Contractor to Owner for any change which results in a net decrease in cost will be the amount of the actual net decrease in cost plus a deduction in Contractor's fee by an amount equal to five percent of such net decrease; and

f. when both additions and credits are involved in any one change, the adjustment in Contractor's fee shall be computed on the basis of the net change in accordance with Paragraphs 11.04.C.2.a through 11.04.C.2.e, inclusive.

11.05 *Change of Contract Times*

A. The Contract Times may only be changed by a Change Order. Any Change Proposal for an adjustment in the Contract Times shall comply with the provisions of Paragraph 11.06. Any Claim for an adjustment in the Contract Times shall comply with the provisions of Article 12.

B. An adjustment of the Contract Times shall be subject to the limitations set forth in Paragraph 4.05, concerning delays in Contractor's progress.

11.06 *Change Proposals*

A. Contractor shall submit a Change Proposal to Engineer to request an adjustment in the Contract Times or Contract Price; appeal an initial decision by Engineer concerning the requirements of the Contract Documents or relating to the acceptability of the Work under the Contract Documents; contest a set-off against payment due; or seek other relief under the Contract. The Change Proposal shall specify any proposed change in Contract Times or Contract Price, or both, or other proposed relief, and explain the reason for the proposed change, with citations to any governing or applicable provisions of the Contract Documents.

1. *Procedures*: Contractor shall submit each Change Proposal to Engineer promptly (but in no event later than 30 days) after the start of the event giving rise thereto, or after such initial decision. The Contractor shall submit supporting data, including the proposed change in Contract Price or Contract Times (if any), to the Engineer and Owner within 15 days after the submittal of the Change Proposal. The supporting data shall be accompanied by a written statement that the supporting data are accurate and complete, and that any requested time or price adjustment is the entire adjustment to which Contractor believes it is entitled as a result of said event. Engineer will advise Owner regarding the Change Proposal, and consider any comments or response from Owner regarding the Change Proposal. If Contractor proceeds with additional work prior to approval of a Change Proposal and execution of a Change Order, or without providing the notice required strictly in accordance with the terms of this Paragraph 11.06, Contractor shall not receive any compensation for such work.

2. *Engineer's Action*: Engineer will review each Change Proposal and, within 30 days after receipt of the Contractor's supporting data, either deny the Change Proposal in whole, approve it in whole, or deny it in part and approve it in part. Such actions shall be in writing, with a copy provided to Owner and Contractor. If Engineer does not take action on the Change Proposal within 30 days, then either Owner or Contractor may at any time thereafter submit a letter to the other party indicating that as a result of Engineer's inaction the Change Proposal is deemed denied, thereby commencing the time for appeal of the denial under Article 12.

3. *Binding Decision*: Engineer's decision will be final and binding upon ~~Owner and~~ Contractor, unless ~~Owner or~~ Contractor appeals the decision by filing a Claim under Article 12. Owner's City Commission is the ultimate binding authority on any changes to the Contract Price.

B. *Resolution of Certain Change Proposals*: If the Change Proposal does not involve the design (as set forth in the Drawings, Specifications, or otherwise), the acceptability of the Work, or other engineering or technical matters, then Engineer will notify the parties that the Engineer is unable to resolve the Change Proposal. For purposes of further resolution of such a Change Proposal, such notice shall be deemed a denial, and Contractor may choose to seek resolution under the terms of Article 12.

11.07 *Execution of Change Orders*

A. Owner and Contractor shall execute appropriate Change Orders covering:

1. changes in the Contract Price or Contract Times which are agreed to by the parties, including any undisputed sum or amount of time for Work actually performed in accordance with a Work Change Directive;

2. changes in Contract Price resulting from an Owner set-off, unless Contractor has duly contested such set-off;

3. changes in the Work which are: (a) ordered by Owner pursuant to Paragraph 11.02, (b) required because of Owner's acceptance of defective Work under Paragraph 14.04 or Owner's correction of defective Work under Paragraph 14.07, or (c) agreed to by the parties, subject to the need for Engineer's recommendation if the change in the Work involves the design (as set forth in the

Drawings, Specifications, or otherwise), or other engineering or technical matters; and

4. changes in the Contract Price or Contract Times, or other changes, which embody the substance of any final and binding results under Paragraph 11.06, or Article 12.

B. Owner's City Commission possesses sole authority to approve a change to the Contract Price. Regardless of whether it is signed by Owner or Owner's representative, no Change Order affecting the Contract Price is legally binding on Owner unless it has been approved by City Commission. ~~If Owner or Contractor refuses to execute a Change Order that is required to be executed under the terms of this Paragraph 11.07, it shall be deemed to be of full force and effect, as if fully executed.~~

11.08 *Notification to Surety*

A. If the provisions of any bond require notice to be given to a surety of any change affecting the general scope of the Work or the provisions of the Contract Documents (including, but not limited to, Contract Price or Contract Times), the giving of any such notice will be Contractor's responsibility. The amount of each applicable bond will be adjusted to reflect the effect of any such change.

ARTICLE 12 – CLAIMS

12.01 *Claims*

A. *Claims Process*: The following disputes between Owner and Contractor shall be submitted to the Claims process set forth in this Article:

1. Appeals by Owner or Contractor of Engineer's decisions regarding Change Proposals;

2. Owner demands for adjustments in the Contract Price or Contract Times, or other relief under the Contract Documents; and

3. Disputes that Engineer has been unable to address because they do not involve the design (as set forth in the Drawings, Specifications, or otherwise), the acceptability of the Work, or other engineering or technical matters.

B. *Submittal of Claim*: The party submitting a Claim shall deliver it directly to the other party to the Contract promptly (but in no event later than 10 ~~30~~ days) after the start of the event giving rise thereto; in the case of appeals regarding Change Proposals within 10 ~~30~~ days of the decision under appeal. The party submitting the Claim shall also furnish a copy to the Engineer, for its information only. The responsibility to substantiate a Claim shall rest with the party making the Claim. In the case of a Claim by Contractor seeking an increase in the Contract Times or Contract Price, or both, Contractor shall certify that the Claim is made in good faith, that the supporting data are accurate and complete, and that to the best of Contractor's knowledge and belief the amount of time or money requested accurately reflects the full amount to which Contractor is entitled. Any Claim by Contractor must indicate **CLAIM** in conspicuous bold type on the first page and must indicate whether Contractor is seeking a change in the Contract Price, the Contract Times, or both. Contractor's Claim must describe the nature of the Claim, including all relevant facts. Contractor shall provide to Owner any documentation supporting Contractor's Claim within 30 days of providing the Claim. Further, Contractor is not entitled to any additional compensation, or to a change in the Contract Price or in the Contract Times, unless and until approved by Owner's City Commission at a duly noticed public meeting. If Contractor proceeds with any work without said approval or without complying strictly with the procedures set forth in this Paragraph 12.01, Contractor does so at its own risk. Strict compliance with this Paragraph 12.01 and City Commission approval are absolute conditions precedent to any changes in the Contract Price or Contract Times and to any other additional compensation.

C. *Review and Resolution*: The party receiving a Claim shall review it thoroughly, giving full consideration to its merits. The two parties shall seek to resolve the Claim through the exchange of information and direct negotiations. The parties may extend the time for resolving the Claim by mutual agreement. All actions taken on a Claim shall be stated in writing and submitted to the other party, with a copy to Engineer.

D. *Mediation*:

1. At any time after initiation of a Claim, Owner and Contractor may mutually agree to mediation of the underlying dispute. The agreement to mediate shall stay the Claim submittal and response process.

2. If Owner and Contractor agree to mediation, then after 60 days from such agreement, either Owner or Contractor may unilaterally terminate the mediation process, and the Claim submittal and decision process shall resume as of the date of the termination. If the mediation proceeds but is unsuccessful in resolving the dispute, the Claim submittal and decision process shall resume as of the date of the conclusion of the mediation, as determined by the mediator.

3. Owner and Contractor shall each pay one-half of the mediator's fees and costs.

E. *Partial Approval*: If the party receiving a Claim approves the Claim in part and denies it in part, such action shall be final and binding unless within 30 days of such action the other party invokes the procedure set forth in Article 17 for final resolution of disputes.

F. *Denial of Claim*: If efforts to resolve a Claim are not successful, the party receiving the Claim may deny it by giving written notice of denial to the other party. If the receiving party does not take action on the Claim within 90 days, then either Owner or Contractor may at any time thereafter submit a letter to the other party indicating that as a result of the inaction, the Claim is deemed denied, thereby commencing the time for appeal of the denial. A denial of the Claim shall be final and binding unless within 30 days of the denial the other party invokes the procedure set forth in Article 17 for the final resolution of disputes.

G. *Final and Binding Results*: If the parties reach a mutual agreement regarding a Claim, whether through approval of the Claim, direct negotiations, mediation, or otherwise; or if a Claim is approved in part and denied in part, or denied in full, and such actions become final and binding; then the results of the agreement or action on the Claim shall be incorporated in a Change Order to the extent they affect the Contract, including the Work, the Contract Times, or the Contract Price.

ARTICLE 13 – COST OF THE WORK; ALLOWANCES; UNIT PRICE WORK

13.01 *Cost of the Work*

A. *Purposes for Determination of Cost of the Work*: The term Cost of the Work means the sum of all costs necessary for the proper performance of the Work at issue, as further defined below. The provisions of this Paragraph 13.01 are used for two distinct purposes:

1. To determine Cost of the Work when Cost of the Work is a component of the Contract Price, under cost-plus-fee, time-and-materials, or other cost-based terms; or

2. To determine the value of a Change Order, Change Proposal, Claim, set-off, or other adjustment in Contract Price. When the value of any such adjustment is determined on the basis of Cost of the Work, Contractor is entitled only to those additional or incremental costs required because of the change in the Work or because of the event giving rise to the adjustment.

B. *Costs Included*: Except as otherwise may be agreed to in writing by Owner, costs included in the Cost of the Work shall be in amounts no higher than those prevailing in the locality of the Project, shall not include any of the costs itemized in Paragraph 13.01.C, and shall include only the following items:

1. Payroll costs for employees in the direct employ of Contractor in the performance of the Work under schedules of job classifications agreed upon by Owner and Contractor. Such employees shall include, without limitation, superintendents, foremen, and other personnel employed full time on the Work. Payroll costs for employees not employed full time on the Work shall be apportioned on the basis of their time spent on the Work. Payroll costs shall include, but not be limited to, salaries and wages plus the cost of fringe benefits, which shall include social security contributions, unemployment, excise, and payroll taxes, workers' compensation,

health and retirement benefits, bonuses, sick leave, and vacation and holiday pay applicable thereto. The expenses of performing Work outside of regular working hours, on Saturday, Sunday, or legal holidays, shall be included in the above to the extent authorized by Owner.

2. Cost of all materials and equipment furnished and incorporated in the Work, including costs of transportation and storage thereof, and Suppliers' field services required in connection therewith. All cash discounts shall accrue to Contractor unless Owner deposits funds with Contractor with which to make payments, in which case the cash discounts shall accrue to Owner. All trade discounts, rebates, and refunds and returns from sale of surplus materials and equipment shall accrue to Owner, and Contractor shall make provisions so that they may be obtained.

3. Payments made by Contractor to Subcontractors for Work performed by Subcontractors. If required by Owner, Contractor shall obtain competitive bids from subcontractors acceptable to Owner and Contractor and shall deliver such bids to Owner, who will then determine, with the advice of Engineer, which bids, if any, will be acceptable. If any subcontract provides that the Subcontractor is to be paid on the basis of Cost of the Work plus a fee, the Subcontractor's Cost of the Work and fee shall be determined in the same manner as Contractor's Cost of the Work and fee as provided in this Paragraph 13.01.

4. Costs of special consultants (including but not limited to engineers, architects, testing laboratories, surveyors, attorneys, and accountants) employed for services specifically related to the Work.

5. Supplemental costs including the following:

    a. The proportion of necessary transportation, travel, and subsistence expenses of Contractor's employees incurred in discharge of duties connected with the Work.

    b. Cost, including transportation and maintenance, of all materials, supplies, equipment, machinery, appliances, office, and temporary facilities at the Site, and hand tools not owned by the workers, which are consumed in the performance of the Work, and cost, less market value, of such items used but not consumed which remain the property of Contractor.

    c. Rentals of all construction equipment and machinery, and the parts thereof, whether rented from Contractor or others in accordance with rental agreements approved by Owner with the advice of Engineer, and the costs of transportation, loading, unloading, assembly, dismantling, and removal thereof. All such costs shall be in accordance with the terms of said rental agreements. The rental of any such equipment, machinery, or parts shall cease when the use thereof is no longer necessary for the Work.

    d. Sales, consumer, use, and other similar taxes related to the Work, and for which Contractor is liable, as imposed by Laws and Regulations.

    e. Deposits lost for causes other than negligence of Contractor, any Subcontractor, or anyone directly or indirectly employed by any of them or for whose acts any of them may be liable, and royalty payments and fees for permits and licenses.

    f. Losses and damages (and related expenses) caused by damage to the Work, not compensated by insurance or otherwise, sustained by Contractor in connection with the performance of the Work (except losses and damages within the deductible amounts of property insurance established in accordance with Paragraph 6.05), provided such losses and damages have resulted from causes other than the negligence of Contractor, any Subcontractor, or anyone directly or indirectly employed by any of them or

for whose acts any of them may be liable. Such losses shall include settlements made with the written consent and approval of Owner. No such losses, damages, and expenses shall be included in the Cost of the Work for the purpose of determining Contractor's fee.

g. The cost of utilities, fuel, and sanitary facilities at the Site.

h. Minor expenses such as communication service at the Site, express and courier services, and similar petty cash items in connection with the Work.

i. The costs of premiums for all bonds and insurance that Contractor is required by the Contract Documents to purchase and maintain.

C. *Costs Excluded*: The term Cost of the Work shall not include any of the following items:

1. Payroll costs and other compensation of Contractor's officers, executives, principals (of partnerships and sole proprietorships), general managers, safety managers, engineers, architects, estimators, attorneys, auditors, accountants, purchasing and contracting agents, expediters, timekeepers, clerks, and other personnel employed by Contractor, whether at the Site or in Contractor's principal or branch office for general administration of the Work and not specifically included in the agreed upon schedule of job classifications referred to in Paragraph 13.01.B.1 or specifically covered by Paragraph 13.01.B.4. The payroll costs and other compensation excluded here are to be considered administrative costs covered by the Contractor's fee.

2. Expenses of Contractor's principal and branch offices other than Contractor's office at the Site.

3. Any part of Contractor's capital expenses, including interest on Contractor's capital employed for the Work and charges against Contractor for delinquent payments.

4. Costs due to the negligence of Contractor, any Subcontractor, or anyone directly or indirectly employed by any of them or for whose acts any of them may be liable, including but not limited to, the correction of defective Work, disposal of materials or equipment wrongly supplied, and making good any damage to property.

5. Other overhead or general expense costs of any kind and the costs of any item not specifically and expressly included in Paragraph 13.01.B.

D. *Contractor's Fee*: When the Work as a whole is performed on the basis of cost-plus, Contractor's fee shall be determined as set forth in the Agreement. When the value of any Work covered by a Change Order, Change Proposal, Claim, set-off, or other adjustment in Contract Price is determined on the basis of Cost of the Work, Contractor's fee shall be determined as set forth in Paragraph 11.04.C.

E. *Documentation*: Whenever the Cost of the Work for any purpose is to be determined pursuant to this Article 13, Contractor will establish and maintain records thereof in accordance with generally accepted accounting practices and submit in a form acceptable to Engineer an itemized cost breakdown together with supporting data.

13.02 *Allowances*

A. It is understood that Contractor ~~has included in the Contract Price all allowances so named in the Contract Documents and~~ shall cause the Work ~~so~~ covered by any allowances so named in the Contract Documents to be performed for such sums and by such persons or entities as may be acceptable to Owner and Engineer.

B. *Cash Allowances*: Contractor agrees that:

1. the cash allowances include the cost to Contractor (less any applicable trade discounts) of materials and equipment required by the allowances to be delivered at the Site, and all applicable taxes; and

2. Contractor's costs for unloading and handling on the Site, labor, installation, overhead, profit, and other expenses contemplated for the cash allowances have

been included in the Contract Price and not in the allowances, and no demand for additional payment on account of any of the foregoing will be valid.

C. *Contingency Allowance*: Contractor agrees that a contingency allowance, if any, is for the sole use of Owner to cover unanticipated costs.

~~D. Prior to final payment, an appropriate Change Order will be issued as recommended by Engineer to reflect actual amounts due Contractor on account of Work covered by allowances, and the Contract Price shall be correspondingly adjusted.~~

13.03 *Unit Price Work*

A. Where the Contract Documents provide that all or part of the Work is to be Unit Price Work, initially the Contract Price will be deemed to include for all Unit Price Work an amount equal to the sum of the unit price for each separately identified item of Unit Price Work times the estimated quantity of each item as indicated in the Agreement.

B. The estimated quantities of items of Unit Price Work are not guaranteed and are solely for the purpose of comparison of Bids and determining an initial Contract Price. Payments to Contractor for Unit Price Work will be based on actual quantities.

C. Each unit price will be deemed to include an amount considered by Contractor to be adequate to cover Contractor's overhead and profit for each separately identified item.

D. Engineer will determine the actual quantities and classifications of Unit Price Work performed by Contractor. Engineer will review with Contractor the Engineer's preliminary determinations on such matters before rendering a written decision thereon (by recommendation of an Application for Payment or otherwise). Engineer's written decision thereon will be final and binding (except as modified by Engineer to reflect changed factual conditions or more accurate data) upon Owner and Contractor, subject to the provisions of the following paragraph.

E. Within 30 days of Engineer's written decision under the preceding paragraph, Contractor may submit a Change Proposal <u>in accordance with Paragraph 11.06</u>, or Owner may file a Claim, seeking an adjustment in the Contract Price if:

1. the quantity of any item of Unit Price Work performed by Contractor differs materially and significantly from the estimated quantity of such item indicated in the Agreement;

2. there is no corresponding adjustment with respect to any other item of Work; and

3. Contractor believes that it is entitled to an increase in Contract Price as a result of having incurred additional expense or Owner believes that Owner is entitled to a decrease in Contract Price, and the parties are unable to agree as to the amount of any such increase or decrease.

ARTICLE 14 – TESTS AND INSPECTIONS; CORRECTION, REMOVAL OR ACCEPTANCE OF DEFECTIVE WORK

14.01 *Access to Work*

A. Owner, Engineer, their consultants and other representatives and personnel of Owner, independent testing laboratories, and authorities having jurisdiction will have access to the Site and the Work at reasonable times for their observation, inspection, and testing. Contractor shall provide them proper and safe conditions for such access and advise them of Contractor's safety procedures and programs so that they may comply therewith as applicable.

14.02 *Tests, Inspections, and Approvals*

A. Contractor shall give Engineer timely notice of readiness of the Work (or specific parts thereof) for all required inspections and tests, and shall cooperate with inspection and testing personnel to facilitate required inspections and tests.

B. Owner shall retain and pay for the services of an independent inspector, testing laboratory, or other qualified individual or entity to perform all inspections and tests expressly required by the Contract Documents to be furnished and paid for by Owner, except that costs incurred in connection with tests or inspections of covered Work shall be governed by the provisions of Paragraph 14.05.

C. If Laws or Regulations of any public body having jurisdiction require any Work (or part thereof) specifically to be inspected, tested, or approved by an employee or other representative of such public body, Contractor shall assume full responsibility for arranging and obtaining such inspections, tests, or approvals, pay all costs in connection therewith, and furnish Engineer the required certificates of inspection or approval.

D. Contractor shall be responsible for arranging, obtaining, and paying for all inspections and tests required:

1. by the Contract Documents, unless the Contract Documents expressly allocate responsibility for a specific inspection or test to Owner;
2. to attain Owner's and Engineer's acceptance of materials or equipment to be incorporated in the Work;
3. by manufacturers of equipment furnished under the Contract Documents;
4. for testing, adjusting, and balancing of mechanical, electrical, and other equipment to be incorporated into the Work; and
5. for acceptance of materials, mix designs, or equipment submitted for approval prior to Contractor's purchase thereof for incorporation in the Work.

Such inspections and tests shall be performed by independent inspectors, testing laboratories, or other qualified individuals or entities acceptable to Owner and Engineer.

E. If the Contract Documents require the Work (or part thereof) to be approved by Owner, Engineer, or another designated individual or entity, then Contractor shall assume full responsibility for arranging and obtaining such approvals.

F. If any Work (or the work of others) that is to be inspected, tested, or approved is covered by Contractor without written concurrence of Engineer, Contractor shall, if requested by Engineer, uncover such Work for observation. Such uncovering shall be at Contractor's expense unless Contractor had given Engineer timely notice of Contractor's intention to cover the same and Engineer had not acted with reasonable promptness in response to such notice.

14.03 *Defective Work*

A. *Contractor's Obligation*: It is Contractor's obligation to assure that the Work is not defective.

B. *Engineer's Authority*: Engineer has the authority to determine whether Work is defective, and to reject defective Work.

C. *Notice of Defects*: Prompt notice of all defective Work of which Owner or Engineer has actual knowledge will be given to Contractor.

D. *Correction, or Removal and Replacement*: Promptly after receipt of written notice of defective Work, Contractor shall correct all such defective Work, whether or not fabricated, installed, or completed, or, if Engineer has rejected the defective Work, remove it from the Project and replace it with Work that is not defective.

E. *Preservation of Warranties*: When correcting defective Work, Contractor shall take no action that would void or otherwise impair Owner's special warranty and guarantee, if any, on said Work.

F. *Costs and Damages*: In addition to its correction, removal, and replacement obligations with respect to defective Work, Contractor shall pay all claims, costs, losses, and damages arising out of or relating to defective Work, including but not limited to the cost of the inspection, testing, correction, removal, replacement, or reconstruction of such defective Work, fines levied against Owner by governmental authorities because the Work is defective, and the costs of repair or replacement of work of others resulting from defective Work. Prior to final payment, if Owner and Contractor are unable to agree as to the measure of such claims, costs, losses, and damages resulting from defective Work, then Owner may impose a reasonable set-off against payments due under Article 15.

14.04 *Acceptance of Defective Work*

A. If, instead of requiring correction or removal and replacement of defective Work, Owner prefers to accept it, Owner may do so (subject, if such

acceptance occurs prior to final payment, to Engineer's confirmation that such acceptance is in general accord with the design intent and applicable engineering principles, and will not endanger public safety). Contractor shall pay all claims, costs, losses, and damages attributable to Owner's evaluation of and determination to accept such defective Work ~~(such costs to be approved by Engineer as to reasonableness)~~, and for the diminished value of the Work to the extent not otherwise paid by Contractor. If any such acceptance occurs prior to final payment, the necessary revisions in the Contract Documents with respect to the Work shall be incorporated in a Change Order. If the parties are unable to agree as to the decrease in the Contract Price, reflecting the diminished value of Work so accepted, then Owner may impose a reasonable set-off against payments due under Article 15. If the acceptance of defective Work occurs after final payment, Contractor shall pay an appropriate amount to Owner.

14.05 *Uncovering Work*

A. Engineer has the authority to require additional inspection or testing of the Work, whether or not the Work is fabricated, installed, or completed.

B. If any Work is covered contrary to the written request of Engineer, then Contractor shall, if requested by Engineer, uncover such Work for Engineer's observation, and then replace the covering, all at Contractor's expense.

C. If Engineer considers it necessary or advisable that covered Work be observed by Engineer or inspected or tested by others, then Contractor, at Engineer's request, shall uncover, expose, or otherwise make available for observation, inspection, or testing as Engineer may require, that portion of the Work in question, and provide all necessary labor, material, and equipment.

1. If it is found that the uncovered Work is defective, Contractor shall be responsible for all claims, costs, losses, and damages arising out of or relating to such uncovering, exposure, observation, inspection, and testing, and of satisfactory replacement or reconstruction (including but not limited to all costs of repair or replacement of work of others); and pending Contractor's full discharge of this responsibility the Owner shall be entitled to impose a reasonable set-off against payments due under Article 15.

2. If the uncovered Work is not found to be defective, Contractor shall be allowed an increase in the Contract Price or an extension of the Contract Times, or both, directly attributable to such uncovering, exposure, observation, inspection, testing, replacement, and reconstruction. If the parties are unable to agree as to the amount or extent thereof, then Contractor may submit a Change Proposal within 30 days of the determination that the Work is not defective.

14.06 *Owner May Stop the Work*

A. If the Work is defective, or Contractor fails to supply sufficient skilled workers or suitable materials or equipment, or fails to perform the Work in such a way that the completed Work will conform to the Contract Documents, then Owner may order Contractor to stop the Work, or any portion thereof, until the cause for such order has been eliminated; however, this right of Owner to stop the Work shall not give rise to any duty on the part of Owner to exercise this right for the benefit of Contractor, any Subcontractor, any Supplier, any other individual or entity, or any surety for, or employee or agent of any of them.

14.07 *Owner May Correct Defective Work*

A. If Contractor fails within a reasonable time after written notice from Engineer to correct defective Work, or to remove and replace rejected Work as required by Engineer, or if Contractor fails to perform the Work in accordance with the Contract Documents, or if Contractor fails to comply with any other provision of the Contract Documents, then Owner may, after seven days written notice to Contractor, correct or remedy any such deficiency.

B. In exercising the rights and remedies under this Paragraph 14.07, Owner shall proceed <u>promptly</u> ~~expeditiously~~. In connection with such corrective or remedial action, Owner may exclude

Contractor from all or part of the Site, take possession of all or part of the Work and suspend Contractor's services related thereto, and incorporate in the Work all materials and equipment stored at the Site or for which Owner has paid Contractor but which are stored elsewhere. Contractor shall allow Owner, Owner's representatives, agents and employees, Owner's other contractors, and Engineer and Engineer's consultants access to the Site to enable Owner to exercise the rights and remedies under this paragraph.

C. All claims, costs, losses, and damages incurred or sustained by Owner in exercising the rights and remedies under this Paragraph 14.07 will be charged against Contractor as set-offs against payments due under Article 15. Such claims, costs, losses and damages will include but not be limited to all costs of repair, or replacement of work of others destroyed or damaged by correction, removal, or replacement of Contractor's defective Work.

D. Contractor shall not be allowed an extension of the Contract Times because of any delay in the performance of the Work attributable to the exercise by Owner of Owner's rights and remedies under this Paragraph 14.07.

ARTICLE 15 – PAYMENTS TO CONTRACTOR; SET-OFFS; COMPLETION; CORRECTION PERIOD

15.01 *Progress Payments*

A. *Basis for Progress Payments*: The Schedule of Values established as provided in Article 2 will serve as the basis for progress payments and will be incorporated into a form of Application for Payment acceptable to Engineer. Progress payments on account of Unit Price Work will be based on the number of units completed during the pay period, as determined under the provisions of Paragraph 13.03. Progress payments for cost-based Work will be based on Cost of the Work completed by Contractor during the pay period.

B. *Applications for Payments*:

1. At least 20 days before the date established in the Agreement for each progress payment (but not more often than once a month), Contractor shall submit to Engineer (or to Engineer's designee identified in writing by Engineer) for review an Application for Payment filled out and signed by Contractor covering the Work completed as of the date of the Application and accompanied by such supporting documentation as is required by the Contract Documents. If payment is requested on the basis of materials and equipment not incorporated in the Work but delivered and suitably stored at the Site or at another location agreed to in writing, the Application for Payment shall also be accompanied by a bill of sale, invoice, or other documentation warranting that Owner has received the materials and equipment free and clear of all Liens, and evidence that the materials and equipment are covered by appropriate property insurance, a warehouse bond, or other arrangements to protect Owner's interest therein, all of which must be satisfactory to Owner. Each application for payment shall be accompanied by a release and affidavit in a form approved by Owner showing that all materials, labor, equipment, and other bills associated with that portion of the Work have been paid in full. Owner shall not be required to make any payment until all such information requested by Owner has been provided.

2. Beginning with the second Application for Payment, each Application shall include an affidavit of Contractor stating that all previous progress payments received on account of the Work have been applied on account to discharge Contractor's legitimate obligations associated with prior Applications for Payment.

3. The amount of retainage with respect to progress payments will be as stipulated in the Agreement.

C. *Review of Applications*:

1. Engineer will, within 10 days after receipt of each Application for Payment, including each resubmittal, either indicate in writing a recommendation of payment and present the Application to Owner, or return the Application to Contractor indicating in

writing Engineer's reasons for refusing to recommend payment. In the latter case, Contractor may make the necessary corrections and resubmit the Application.

2. Engineer's recommendation of any payment requested in an Application for Payment will constitute a representation by Engineer to Owner, based on Engineer's observations of the executed Work as an experienced and qualified design professional, and on Engineer's review of the Application for Payment and the accompanying data and schedules, that to the best of Engineer's knowledge, information and belief:

    a. the Work has progressed to the point indicated;

    b. the quality of the Work is generally in accordance with the Contract Documents (subject to an evaluation of the Work as a functioning whole prior to or upon Substantial Completion, the results of any subsequent tests called for in the Contract Documents, a final determination of quantities and classifications for Unit Price Work under Paragraph 13.03, and any other qualifications stated in the recommendation); and

    c. the conditions precedent to Contractor's being entitled to such payment appear to have been fulfilled in so far as it is Engineer's responsibility to observe the Work.

3. By recommending any such payment Engineer will not thereby be deemed to have represented that:

    a. inspections made to check the quality or the quantity of the Work as it has been performed have been exhaustive, extended to every aspect of the Work in progress, or involved detailed inspections of the Work beyond the responsibilities specifically assigned to Engineer in the Contract; or

    b. there may not be other matters or issues between the parties that might entitle Contractor to be paid additionally by Owner or entitle Owner to withhold payment to Contractor.

4. Neither Engineer's review of Contractor's Work for the purposes of recommending payments nor Engineer's recommendation of any payment, including final payment, will impose responsibility on Engineer:

    a. to supervise, direct, or control the Work, or

    b. for the means, methods, techniques, sequences, or procedures of construction, or the safety precautions and programs incident thereto, or

    c. for Contractor's failure to comply with Laws and Regulations applicable to Contractor's performance of the Work, or

    d. to make any examination to ascertain how or for what purposes Contractor has used the money paid on account of the Contract Price, or

    e. to determine that title to any of the Work, materials, or equipment has passed to Owner free and clear of any Liens.

5. Engineer may refuse to recommend the whole or any part of any payment if, in Engineer's opinion, it would be incorrect to make the representations to Owner stated in Paragraph 15.01.C.2.

6. Engineer will recommend reductions in payment (set-offs) necessary in Engineer's opinion to protect Owner from loss because:

    a. the Work is defective, requiring correction or replacement;

    b. the Contract Price has been reduced by Change Orders;

    c. Owner has been required to correct defective Work in accordance with Paragraph 14.07, or has accepted defective Work pursuant to Paragraph 14.04;

    d. Owner has been required to remove or remediate a Hazardous Environmental

Condition for which Contractor is responsible; or

e. Engineer has actual knowledge of the occurrence of any of the events that would constitute a default by Contractor and therefore justify termination for cause under the Contract Documents.

D. *Payment Becomes Due*:

1. Payment becomes due as provided in section 218.735, Florida Statutes (2018). ~~Ten days after presentation of the Application for Payment to Owner with Engineer's recommendation, the amount recommended (subject to any Owner set-offs) will become due, and when due will be paid by Owner to Contractor.~~

E. *Reductions in Payment by Owner*:

1. In addition to any reductions in payment (set-offs) recommended by Engineer, Owner is entitled to impose a set-off against payment based on any of the following:

a. claims have been made against Owner on account of Contractor's conduct in the performance or furnishing of the Work, or Owner has incurred costs, losses, or damages on account of Contractor's conduct in the performance or furnishing of the Work, including but not limited to claims, costs, losses, or damages from workplace injuries, adjacent property damage, non-compliance with Laws and Regulations, and patent infringement;

b. Contractor has failed to take reasonable and customary measures to avoid damage, delay, disruption, and interference with other work at or adjacent to the Site;

c. Contractor has failed to provide and maintain required bonds or insurance;

d. Owner has been required to remove or remediate a Hazardous Environmental Condition for which Contractor is responsible;

e. Owner has incurred extra charges or engineering costs related to submittal reviews, evaluations of proposed substitutes, tests and inspections, or return visits to manufacturing or assembly facilities;

f. the Work is defective, requiring correction or replacement;

g. Owner has been required to correct defective Work in accordance with Paragraph 14.07, or has accepted defective Work pursuant to Paragraph 14.04;

h. the Contract Price has been reduced by Change Orders;

i. an event that would constitute a default by Contractor and therefore justify a termination for cause has occurred;

j. liquidated damages have accrued as a result of Contractor's failure to achieve Milestones, Substantial Completion, or final completion of the Work;

k. ~~Liens have been filed in connection with the Work, except where Contractor has delivered a specific bond satisfactory to Owner to secure the satisfaction and discharge of such Liens;~~

l. there are other items entitling Owner to a set off against the amount recommended.

2. If Owner imposes any set-off against payment, whether based on its own knowledge or on the written recommendations of Engineer, Owner will give Contractor prompt ~~immediate~~ written notice (with a copy to Engineer) stating the reasons for such action and the specific amount of the reduction, and promptly pay Contractor any amount remaining after deduction of the amount so withheld. Owner shall promptly pay Contractor the amount so withheld, or any adjustment thereto agreed to by Owner and Contractor, if Contractor remedies the reasons for such action. The reduction imposed shall be

binding on Contractor unless it duly submits a Change Proposal contesting the reduction.

3. Upon a subsequent determination that Owner's refusal of payment was not justified, the amount wrongfully withheld shall be treated as an amount due as determined by Paragraph 15.01.C.1 and subject to interest as provided in the Agreement.

15.02 *Contractor's Warranty of Title*

A. Contractor warrants and guarantees that title to all Work, materials, and equipment furnished under the Contract will pass to Owner free and clear of (1) all Liens and other title defects, and (2) all patent, licensing, copyright, or royalty obligations, no later than seven days after the time of payment by Owner.

15.03 *Substantial Completion*

A. When Contractor considers the entire Work ready for its intended use Contractor shall notify Owner and Engineer in writing that the entire Work is substantially complete and request that Engineer issue a certificate of Substantial Completion. Contractor shall at the same time submit to Owner and Engineer an initial draft of punch list items to be completed or corrected before final payment.

B. Promptly after Contractor's notification, Owner, Contractor, and Engineer shall make an inspection of the Work to determine the status of completion. If Engineer does not consider the Work substantially complete, Engineer will notify Contractor in writing giving the reasons therefor.

C. If Engineer considers the Work substantially complete, Engineer will deliver to Owner a preliminary certificate of Substantial Completion which shall fix the date of Substantial Completion. Engineer shall attach to the certificate a punch list of items to be completed or corrected before final payment. Owner shall have seven days after receipt of the preliminary certificate during which to make written objection to Engineer as to any provisions of the certificate or attached punch list. If, after considering the objections to the provisions of the preliminary certificate, Engineer concludes that the Work is not substantially complete, Engineer will, within 14 days after submission of the preliminary certificate to Owner, notify Contractor in writing that the Work is not substantially complete, stating the reasons therefor. If Owner does not object to the provisions of the certificate, or if despite consideration of Owner's objections Engineer concludes that the Work is substantially complete, then Engineer will, within said 14 days, execute and deliver to Owner and Contractor a final certificate of Substantial Completion (with a revised punch list of items to be completed or corrected) reflecting such changes from the preliminary certificate as Engineer believes justified after consideration of any objections from Owner.

D. At the time of receipt of the preliminary certificate of Substantial Completion, Owner and Contractor will confer regarding Owner's use or occupancy of the Work following Substantial Completion, review the builder's risk insurance policy with respect to the end of the builder's risk coverage, and confirm the transition to coverage of the Work under a permanent property insurance policy held by Owner. Unless Owner and Contractor agree otherwise in writing, Owner shall bear responsibility for security, operation, protection of the Work, property insurance, maintenance, heat, and utilities upon Owner's use or occupancy of the Work.

E. After Substantial Completion the Contractor shall promptly begin work on the punch list of items to be completed or corrected prior to final payment. In appropriate cases Contractor may submit monthly Applications for Payment for completed punch list items, following the progress payment procedures set forth above.

F. Owner shall have the right to exclude Contractor from the Site after the date of Substantial Completion subject to allowing Contractor reasonable access to remove its property and complete or correct items on the punch list.

15.04 *Partial Use or Occupancy*

A. Prior to Substantial Completion of all the Work, Owner may use or occupy any substantially completed part of the Work which has specifically been identified in the Contract Documents, or which Owner, Engineer, and

Contractor agree constitutes a separately functioning and usable part of the Work that can be used by Owner for its intended purpose without significant interference with Contractor's performance of the remainder of the Work, subject to the following conditions:

1. At any time Owner may request in writing that Contractor permit Owner to use or occupy any such part of the Work that Owner believes to be substantially complete. If and when Contractor agrees that such part of the Work is substantially complete, Contractor, Owner, and Engineer will follow the procedures of Paragraph 15.03.A through E for that part of the Work.

2. At any time Contractor may notify Owner and Engineer in writing that Contractor considers any such part of the Work substantially complete and request Engineer to issue a certificate of Substantial Completion for that part of the Work.

3. Within a reasonable time after either such request, Owner, Contractor, and Engineer shall make an inspection of that part of the Work to determine its status of completion. If Engineer does not consider that part of the Work to be substantially complete, Engineer will notify Owner and Contractor in writing giving the reasons therefor. If Engineer considers that part of the Work to be substantially complete, the provisions of Paragraph 15.03 will apply with respect to certification of Substantial Completion of that part of the Work and the division of responsibility in respect thereof and access thereto.

4. No use or occupancy or separate operation of part of the Work may occur prior to compliance with the requirements of Paragraph 6.05 regarding builder's risk or other property insurance.

15.05 *Final Inspection*

A. Upon written notice from Contractor that the entire Work or an agreed portion thereof is complete, Engineer will promptly make a final inspection with Owner and Contractor and will notify Contractor in writing of all particulars in which this inspection reveals that the Work, or agreed portion thereof, is incomplete or defective. Contractor shall immediately take such measures as are necessary to complete such Work or remedy such deficiencies.

15.06 *Final Payment*

A. *Application for Payment*:

1. After Contractor has, in the opinion of Engineer, satisfactorily completed all corrections identified during the final inspection and has delivered, in accordance with the Contract Documents, all maintenance and operating instructions, schedules, guarantees, bonds, certificates or other evidence of insurance, certificates of inspection, annotated record documents (as provided in Paragraph 7.11), and other documents, Contractor may make application for final payment.

2. As a condition precedent to final payment, ~~T~~the final Application for Payment shall be accompanied (except as previously delivered) by:

a. all documentation called for in the Contract Documents;

b. consent of the surety, if any, to final payment;

c. satisfactory evidence that all title issues have been resolved such that title to all Work, materials, and equipment has passed to Owner free and clear of any Liens or other title defects, or will so pass upon final payment.

d. a list of all disputes that Contractor believes are unsettled; and

e. complete and legally effective releases or waivers (satisfactory to Owner) of all claims ~~Lien rights~~ arising out of the Work beyond those listed per Paragraph 15.06.A.2.d.~~, and of Liens filed in connection with the Work.~~

3. In lieu of the releases or waivers ~~of Liens~~ specified in Paragraph 15.06.A.2 and as approved by Owner, Contractor may furnish receipts or releases in full and an affidavit of Contractor that: (a) the releases and

receipts include all labor, services, material, and equipment for which a Claim ~~Lien~~ could be filed; and (b) all payrolls, material and equipment bills, and other indebtedness connected with the Work for which Owner might in any way be responsible, or which might in any way result in liens or other burdens on Owner's property, have been paid or otherwise satisfied. If any Subcontractor or Supplier fails to furnish such a release or receipt in full, Contractor may furnish a bond or other collateral satisfactory to Owner to indemnify Owner against any claim by a Subcontractor or Supplier, ~~Lien,~~ or Owner at its option may issue joint checks payable to Contractor and specified Subcontractors and Suppliers.

B. *Engineer's Review of Application and Acceptance*:

1. If, on the basis of Engineer's observation of the Work during construction and final inspection, and Engineer's review of the final Application for Payment and accompanying documentation as required by the Contract Documents, Engineer is satisfied that the Work has been completed and Contractor's other obligations under the Contract have been fulfilled, Engineer will, within ten days after receipt of the final Application for Payment, indicate in writing Engineer's recommendation of final payment and present the Application for Payment to Owner for payment. Such recommendation shall account for any set-offs against payment that are necessary in Engineer's opinion to protect Owner from loss for the reasons stated above with respect to progress payments. At the same time Engineer will also give written notice to Owner and Contractor that the Work is acceptable, subject to the provisions of Paragraph 15.07. Otherwise, Engineer will return the Application for Payment to Contractor, indicating in writing the reasons for refusing to recommend final payment, in which case Contractor shall make the necessary corrections and resubmit the Application for Payment.

C. *Completion of Work*: The Work is complete (subject to surviving obligations) when it is ready for final payment as established by the Engineer's written recommendation of final payment.

D. *Payment Becomes Due*: Payment becomes due as provided in section 218.735, Florida Statutes (2018), for ~~Thirty days after the presentation to Owner of the final Application for Payment and accompanying documentation,~~ the amount recommended by Engineer (less any further sum Owner is entitled to set off against Engineer's recommendation, including but not limited to set-offs for liquidated damages and set-offs allowed under the provisions above with respect to progress payments) ~~will become due~~ and shall be paid by Owner to Contractor.

15.07 *Waiver of Claims*

A. The making of final payment will not constitute a waiver by Owner of claims or rights against Contractor. Owner expressly reserves claims and rights arising from unsettled claims ~~Liens~~, from defective Work appearing after final inspection pursuant to Paragraph 15.05, from Contractor's failure to comply with the Contract Documents or the terms of any special guarantees specified therein, from any latent defects in the Work, from outstanding Claims by Owner, or from Contractor's continuing obligations under the Contract Documents.

B. The acceptance of final payment by Contractor will constitute a waiver by Contractor of all claims and rights against Owner other than those pending matters that have been duly submitted or appealed under the provisions of Article 17.

15.08 *Correction Period*

A. If within one year after the date of Substantial Completion (or such longer period of time as may be prescribed by the terms of any applicable special guarantee required by the Contract Documents, or by any specific provision of the Contract Documents), any Work is found to be defective, or if the repair of any damages to the Site, adjacent areas that Contractor has arranged to use through construction easements or otherwise, and other adjacent areas used by Contractor as permitted by Laws and

Regulations, is found to be defective, then Contractor shall promptly, without cost to Owner and in accordance with Owner's written instructions:

1. correct the defective repairs to the Site or such other adjacent areas;
2. correct such defective Work;
3. if the defective Work has been rejected by Owner, remove it from the Project and replace it with Work that is not defective, and
4. satisfactorily correct or repair or remove and replace any damage to other Work, to the work of others, or to other land or areas resulting therefrom.

B. If Contractor does not promptly comply with the terms of Owner's written instructions, or in an emergency where delay would cause serious risk of loss or damage, Owner may have the defective Work corrected or repaired or may have the rejected Work removed and replaced. Contractor shall pay all claims, costs, losses, and damages (including but not limited to all fees and charges of engineers, architects, attorneys, and other professionals and all court or arbitration or other dispute resolution costs) arising out of or relating to such correction or repair or such removal and replacement (including but not limited to all costs of repair or replacement of work of others).

C. In special circumstances where a particular item of equipment is placed in continuous service before Substantial Completion of all the Work, the correction period for that item may start to run from an earlier date if so provided in the Specifications.

D. Where defective Work (and damage to other Work resulting therefrom) has been corrected or removed and replaced under this paragraph, the correction period hereunder with respect to such Work will be extended for an additional period of one year after such correction or removal and replacement has been satisfactorily completed.

E. Contractor's obligations under this paragraph are in addition to all other obligations and warranties. The provisions of this paragraph shall not be construed as a substitute for, or a waiver of, the provisions of any applicable statute of limitation or repose.

ARTICLE 16 – SUSPENSION OF WORK AND TERMINATION

16.01 *Owner May Suspend Work*

A. At any time and without cause, Owner may suspend the Work or any portion thereof for a period of not more than 90 consecutive days by written notice to Contractor and Engineer. Such notice will fix the date on which Work will be resumed. Contractor shall resume the Work on the date so fixed. Contractor shall be entitled to an adjustment in the Contract Price or an extension of the Contract Times, or both, directly attributable to any such suspension. Any Change Proposal seeking such adjustments shall be submitted no later than 30 days after the date fixed for resumption of Work.

16.02 *Owner May Terminate for Cause*

A. The occurrence of any one or more of the following events will constitute a default by Contractor and justify termination for cause:

1. Contractor's persistent failure to perform the Work in accordance with the Contract Documents (including, but not limited to, failure to supply sufficient skilled workers or suitable materials or equipment or failure to adhere to the Progress Schedule);
2. Failure of Contractor to perform or otherwise to comply with a material term of the Contract Documents;
3. Contractor's disregard of Laws or Regulations of any public body having jurisdiction; or
4. Contractor's repeated disregard of the authority of Owner or Engineer.

B. If one or more of the events identified in Paragraph 16.02.A occurs, then after giving Contractor (and any surety) ten days written notice that Owner is considering a declaration that Contractor is in default and termination of the contract, Owner may proceed to:

1. declare Contractor to be in default, and give Contractor (and any surety) notice that the Contract is terminated; and

2. enforce the rights available to Owner under any applicable performance bond.

C. Subject to the terms and operation of any applicable performance bond, if Owner has terminated the Contract for cause, Owner may exclude Contractor from the Site, take possession of the Work, incorporate in the Work all materials and equipment stored at the Site or for which Owner has paid Contractor but which are stored elsewhere, and complete the Work as Owner may deem expedient.

D. Owner may not proceed with termination of the Contract under Paragraph 16.02.B if Contractor within seven days of receipt of notice of intent to terminate begins to correct its failure to perform and proceeds diligently to cure such failure.

E. If Owner proceeds as provided in Paragraph 16.02.B, Contractor shall not be entitled to receive any further payment until the Work is completed. If the unpaid balance of the Contract Price exceeds the cost to complete the Work, including all related claims, costs, losses, and damages (including but not limited to all fees and charges of engineers, architects, attorneys, and other professionals) sustained by Owner, such excess will be paid to Contractor. If the cost to complete the Work including such related claims, costs, losses, and damages exceeds such unpaid balance, Contractor shall pay the difference to Owner. Such claims, costs, losses, and damages incurred by Owner will be reviewed by Engineer as to their reasonableness and, when so approved by Engineer, incorporated in a Change Order. When exercising any rights or remedies under this paragraph, Owner shall not be required to obtain the lowest price for the Work performed.

F. Where Contractor's services have been so terminated by Owner, the termination will not affect any rights or remedies of Owner against Contractor then existing or which may thereafter accrue, or any rights or remedies of Owner against Contractor or any surety under any payment bond or performance bond. Any retention or payment of money due Contractor by Owner will not release Contractor from liability.

G. If and to the extent that Contractor has provided a performance bond under the provisions of Paragraph 6.01.A, the provisions of that bond shall govern over any inconsistent provisions of Paragraphs 16.02.B and 16.02.D.

16.03 *Owner May Terminate For Convenience*

A. Upon seven days written notice to Contractor and Engineer, Owner may, without cause and without prejudice to any other right or remedy of Owner, terminate the Contract. In such case, Contractor shall be paid for (without duplication of any items):

1. completed and acceptable Work executed in accordance with the Contract Documents prior to the effective date of termination, including fair and reasonable sums for overhead and profit on such Work;

2. expenses sustained prior to the effective date of termination in performing services and furnishing labor, materials, or equipment as required by the Contract Documents in connection with uncompleted Work, plus fair and reasonable sums for overhead and profit on such expenses; and

3. other reasonable expenses directly attributable to termination, including costs incurred to prepare a termination for convenience cost proposal.

B. Contractor shall not be paid on account of loss of anticipated overhead, profits, or revenue, or other economic loss arising out of or resulting from such termination.

16.04 *Contractor May Stop Work or Terminate*

A. If, through no act or fault of Contractor, ~~(1)~~ the Work is suspended for more than 90 consecutive days by Owner or under an order of court or other public authority, ~~or (2) Engineer fails to act on any Application for Payment within 30 days after it is submitted, or (3) Owner fails for 30 days to pay Contractor any sum finally determined to be due,~~ then Contractor may, upon seven days written notice to Owner and Engineer, and provided Owner or Engineer do

not remedy such suspension or failure within that time, terminate the contract and recover from Owner payment on the same terms as provided in Paragraph 16.03.

~~B. In lieu of terminating the Contract and without prejudice to any other right or remedy, if Engineer has failed to act on an Application for Payment within 30 days after it is submitted, or Owner has failed for 30 days to pay Contractor any sum finally determined to be due, Contractor may, seven days after written notice to Owner and Engineer, stop the Work until payment is made of all such amounts due Contractor, including interest thereon. The provisions of this paragraph are not intended to preclude Contractor from submitting a Change Proposal for an adjustment in Contract Price or Contract Times or otherwise for expenses or damage directly attributable to Contractor's stopping the Work as permitted by this paragraph.~~

ARTICLE 17 – FINAL RESOLUTION OF DISPUTES

17.01 *Methods and Procedures*

A. *Disputes Subject to Final Resolution*: The following disputed matters are subject to final resolution under the provisions of this Article:

1. A timely appeal of an approval in part and denial in part of a Claim, or of a denial in full; and

2. Disputes between Owner and Contractor concerning the Work or obligations under the Contract Documents, and arising after final payment has been made.

B. *Final Resolution of Disputes*: For any dispute subject to resolution under this Article, Owner or Contractor may:

1. elect in writing to invoke the dispute resolution process provided for in the Supplementary Conditions; or

2. agree with the other party to submit the dispute to another dispute resolution process; or

3. if no dispute resolution process is provided for in the Supplementary Conditions or mutually agreed to, give written notice to the other party of the intent to submit the dispute to a court of competent jurisdiction.

ARTICLE 18 – MISCELLANEOUS

18.01 *Giving Notice*

A. Whenever any provision of the Contract Documents requires the giving of written notice, it will be deemed to have been validly given if:

1. delivered in person, by a commercial courier service or otherwise, to the individual or to a member of the firm or to an officer of the corporation for which it is intended; or

2. delivered at or sent by registered or certified mail, postage prepaid, to the last business address known to the sender of the notice.

18.02 *Computation of Times*

A. When any period of time is referred to in the Contract by days, it will be computed to exclude the first and include the last day of such period. If the last day of any such period falls on a Saturday or Sunday or on a day made a legal holiday by the law of the applicable jurisdiction, such day will be omitted from the computation.

18.03 *Cumulative Remedies*

A. The duties and obligations imposed by these General Conditions and the rights and remedies available hereunder to the parties hereto are in addition to, and are not to be construed in any way as a limitation of, any rights and remedies available to any or all of them which are otherwise imposed or available by Laws or Regulations, by special warranty or guarantee, or by other provisions of the Contract. The provisions of this paragraph will be as effective as if repeated specifically in the Contract Documents in connection with each particular duty, obligation, right, and remedy to which they apply.

18.04 *Limitation of Damages*

A. With respect to any and all Change Proposals, Claims, disputes subject to final resolution, and other matters at issue, neither Owner nor Engineer, nor any of their officers, directors, members, partners, employees, agents,

consultants, or subcontractors, shall be liable to Contractor for any claims, costs, losses, or damages sustained by Contractor on or in connection with any other project or anticipated project.

18.05 *No Waiver*

A. A party's non-enforcement of any provision shall not constitute a waiver of that provision, nor shall it affect the enforceability of that provision or of the remainder of this Contract.

18.06 *Survival of Obligations*

A. All representations, indemnifications, warranties, and guarantees made in, required by, or given in accordance with the Contract, as well as all continuing obligations indicated in the Contract, will survive final payment, completion, and acceptance of the Work or termination or completion of the Contract or termination of the services of Contractor.

18.07 *Controlling Law*

A. This Contract shall be governed by, construed and interpreted in accordance with the laws of the State of Florida. Contractor and Owner consent to jurisdiction over them and agree that venue for any state court action shall lie solely in the Sixth Judicial Circuit in and for Pinellas County, Florida, and venue for any federal court action shall lie solely in the U.S. District Court for the Middle District of Florida, Tampa Division. ~~This Contract is to be governed by the law of the state in which the Project is located.~~

18.08 *Headings*

A. Article and paragraph headings are inserted for convenience only and do not constitute parts of these General Conditions.

18.09 *Counterparts*

A. This Contract may be executed in one or more counterparts, any one of which need not contain the signatures of more than one party, but all such counterparts taken together will constitute one and the same instrument.

18.10 *No Third-Party Beneficiaries*

A. This Contract is entered into solely for the benefit of Owner and Contractor and shall not be construed as a benefit to any third parties, including but not limited to the general public, nor shall it be construed as enforceable by third parties.

18.11 *Severability*

A. If any one or more of the provisions of the Contract Documents shall be held to be invalid, illegal, or unenforceable in any respect by a court of competent jurisdiction, the validity, legality and enforceability of the remaining provisions of the Contract Documents shall not in any way be affected or impaired and the Contract Documents shall be treated as though that portion had never been a part thereof.

18.12 *Copyright*

A. This document is a MODIFIED version of EJCDC® C-700 (Rev. 1), Copyright © 2013 by the National Society of Professional Engineers, American Council of Engineering Companies, and American Society of Civil Engineers, or is based in part on excerpts from copyrighted EJCDC documents. Those portions of the text that originated in copyrighted EJCDC documents remain subject to the copyright.

Supplementary Conditions

These Supplementary Conditions amend or supplement the City of Largo General Conditions of the Construction Contract. All provisions that are not so amended or supplemented remain in full force and effect. In case of conflict, the Supplementary Conditions take precedence over the General Conditions.

The terms used in these Supplementary Conditions have the meanings stated in the General Conditions. Additional terms used in these Supplementary Conditions have the meanings stated below, which are applicable to both the singular and plural thereof.

The address system used in these Supplementary Conditions is the same as the address system used in the General Conditions, with the prefix "SC" added thereto.

ARTICLE 1 – DEFINITIONS AND TERMINOLOGY

SC-1.01 Defined Terms

SC-1.01.A.1 Add to the list of definitions in Paragraph 1.01.A by inserting the following as numbered items in their proper alphabetical positions:

Construction Documents—The construction plans and specifications developed for Owner.

Construction Phase Services—The portion of the Contractor's Work following Owner's acceptance and approval of the Construction Documents.

Master Project Schedule—The schedule prepared and maintained by Contractor that includes all activities of the Construction Phase Services as well as the Design Professional's activities under the Design Agreement.

Owner's Site Representative—The authorized representative of Owner assigned to assist Owner at the Site and assist Owner in observing the progress and quality of the Work.

Project Management Information System ("PMIS")—The Contractor's overall process for effectively managing the Project, which shall be documented and delivered in accordance with the Supplementary Conditions.

Project Management Plan—The Contractor's overall plan for effectively managing the Project, which shall be documented and delivered in accordance with the Supplementary Conditions.

SC-1.02 Terminology

SC-1.02.E Add the following new paragraphs immediately after Paragraph 1.02.E:

1. Any work, materials or equipment that may reasonably be inferred from the Contract Documents as being required to produce the intended result shall be supplied whether or not specifically called for in the Contract Documents.
2. Drawings are intended to show general arrangements, design and extent of Work and are not intended to serve as shop drawings. Specifications are separated into divisions for convenience of reference only and shall not be interpreted as establishing divisions for the Work, trades, subcontracts, or extent of any part of the Work. In the event of a discrepancy between or among the drawings, specifications or other Contract Document provisions, Contractor shall be required to comply with the provision which is the more

restrictive or stringent requirement upon Contractor, as determined by Design Professional.

ARTICLE 2 – PRELIMINARY MATTERS

SC-2.03 Before Starting Construction

SC-2.03.A Add the following new paragraphs immediately after Paragraph 2.03.A.3:

4. a preliminary Project Management Plan; and

5. a preliminary description of the Project Management Information System.

SC-2.04 Preconstruction Conference; Designation of Authorized Representatives

SC-2.04.B Add the following new language to the end of Paragraph 2.04.B:

Contractor's authorized representative shall be a competent resident Project manager, whom Contractor shall not later replace, except under extraordinary circumstances, without advance written notice to, and approval by, Owner and Engineer, which will not be unreasonably withheld. The Contractor's resident Project manager must have the full authority to act on behalf of the Contractor. All communications given to the Contractor's resident Project manager shall be as binding as if given to the Contractor.

SC-2.04.C Add the following new paragraphs immediately after Paragraph 2.04.B:

C. At this conference Owner and Contractor will review Contractor's preliminary Project Management Plan, which Contractor shall prepare in accordance with the following requirements:

1. The Project Management Plan will guide the Contractor's performance of Work. The Project Management Plan will provide a plan for the control, direction, coordination and evaluation of the Work performed throughout the Project; the Project organization including identification of key personnel, responsibilities of the Contractor, Owner and Design Professional; Work flow diagrams; and strategy for bidding and subcontracting the Work. Owner shall have the right to review the Project Management Plan and to approve its content and format. Within ten (10) days both parties have executed this Agreement, Contractor will prepare the Project Management Plan to include Construction Phase Services and submit it to Owner for review and approval. The Project Management Plan may otherwise be updated as necessary throughout the Construction Phase, but Contractor may not make material changes without Owner's prior written concurrence. Any conflicts between the Project Management Plan and the Contract Documents shall be governed by the latter.

2. The Project Management Plan shall describe in detail the procedures for executing the Work and the organizations participating. The Project Management Plan shall include, as a minimum, the following sections:

a. Project Definition: The known characteristics of the Project and sub-projects shall be described in general terms which will provide the participants a basic understanding of the Project and sub-projects.

b. Project Goals: The schedule, budget, physical, technical and other objectives for the Project shall be defined.

c. Project Strategy: A narrative description of the Project delivery methods which shall be utilized to accomplish the Project goals.

d. Project Work Plan: A matrix display of the Work to be performed by Contractor, as well as the services and items to be furnished by the Design Professional and the Owner during each phase of the Project.

e. Project Organization: A summary organization chart showing the interrelationships between Owner, Contractor and Design Professional, and other supporting organizations and permitting review agencies. Detailed charts, one each for Contractor and Design Professional, showing organizational elements participating in the Project, shall be included.

f. Responsibility Performance Chart: A detailed matrix showing the specific responsibilities and interrelationships of Owner, Design Professional, and Contractor. The chart shall indicate major responsibility, and minor responsibility, for each specific task required to deliver the Project. Contractor shall develop a similar chart for the personnel within its own organization who are assigned to the Project, as well as for the Design Professional's and Owner's personnel assigned to the Project from data supplied by them.

g. Flow Diagrams: A display of the flow of information and the decision process for the review and approval of shop drawings and submittals, progress, and change orders.

h. Communication Procedures: A narrative description or depiction of how to manage, control, and coordinate necessary communications among Contractor, Design Professional, and Owner throughout the Project, e.g., correspondence, minutes, reports, inspections, team meetings, technical reviews, design reviews, etc.

3. The Project Management Plan for Construction Phase Services must be completed by Contractor and approved by Owner as a condition precedent to payment of any compensation for Construction Phase Services under the Agreement.

D. At this conference Owner and Contractor will review Contractor’s preliminary Project Management Information System ("PMIS"), which system shall be in place for the Construction Phase services to be provided by Contractor, and which Contractor shall prepare in accordance with the following requirements:

1. General:

a. Contractor shall implement and shall utilize throughout the life of this Project all subsystems of the PMIS.

b. The reports, documents, and data to be provided shall represent an accurate assessment of the current status of the Project and of the Work remaining to be accomplished and it shall provide a sound basis for identifying variances and problems and for making management decisions.

c. If requested by Owner, Contractor shall conduct a comprehensive workshop for participants designated by Owner and additional seminars as required to provide instruction with respect to the PMIS. This workshop and the seminars shall facilitate each participant's use and understanding of the PMIS.

d. The PMIS shall be described in terms of the following major subsystems:

1) Narrative Reporting;

2) Schedule Control;

3) Cost Control and Estimating;

4) Project Accounting;

5) Accounting and Payment; and

6) Action Reports.

e. The above reports shall be submitted at least on a monthly basis and shall accompany each monthly Application for Payment.

2. Narrative Reporting Subsystem

a. Contractor shall prepare written reports as described hereunder. All reports shall be in 8 1/2" x 11" format.

b. The Narrative Reporting Subsystem shall include the following reports:

1) A Monthly Executive Summary which provides an overview of current issues and pending decisions, future developments and expected achievements, and any problems or delays, including code violations found by any permitting authority.

2) A Monthly Cost Narrative describing the current construction cost estimate status of the Project.

3) A Monthly Scheduling Narrative summarizing the current status of the overall Master Project Schedule. This report shall include an analysis of the various Project sub-schedules, a description of the critical path, and other analyses as necessary to compare planned performance with actual performance.

4) A Monthly Accounting Narrative describing the current cost and payment status for the entire Project. This report shall relate current encumbrances and expenditures to the budget allocations.

5) Monthly Construction Progress Report during the Construction Phase summarizing the Work of the various subcontractors. This report shall include information from the weekly job site meetings as applicable such as general conditions, long lead supplies, current deliveries, safety and labor relations, programs, permits, construction problems and recommendations, and plans for the succeeding month.

6) A Daily Construction Diary during the Construction Phase describing events and conditions on the site.

c. The reports outlined above shall be bound with applicable computer reports and submitted monthly during the Design Phase and the Construction Phase and shall be current through the end of the preceding month. Copies shall be delivered to Owner and Design Professional. A bound copy of the complete diary shall be submitted to Owner at the conclusion of the Project.

3. Schedule Control Subsystem

a. Construction Schedule: Within ten (10) calendar days after both parties have executed this Agreement, the Contractor shall prepare and submit to the Owner and Design Professional, for their review and approval, a Construction Schedule. This schedule shall conform to the format outlined below. Within ten (10) calendar days of Contractor's submittal, Owner and Design Professional shall review the schedule and provide Contractor a written list of corrections needed to approve the schedule. Contractor must make all corrections and resolve all comments within ten (10) calendar days of receipt of corrections and comments from Owner and Design Professional. If the schedule is not approved within ten (10) calendar days of the Construction Phase Commencement Date, Owner and Design Professional will withhold all Contract payments until the schedule is approved. The Construction Schedule shall be integrated into the Master Project Schedule. Failure of Contractor to develop and submit a Construction Schedule as aforesaid shall be sufficient grounds for Owner to find Contractor in substantial default hereunder and that sufficient cause exists to terminate the Agreement or to withhold any payment.

1) Following development and submittal of the Construction Schedule, Contractor shall, at the end of each calendar month occurring thereafter during the period of time required to finally complete the Project, or at such earlier intervals as circumstances may require, update and/or revise the Construction Schedule which shall be submitted to Owner in duplicate. No additional compensation will be due Contractor for making such updates. Failure of Contractor to update, revise, and submit the Construction Schedule as aforesaid shall be sufficient grounds for the Owner to find Contractor in substantial default hereunder and that sufficient cause exists to terminate the Agreement or to withhold payment to Contractor until a schedule or schedule update acceptable to Owner is submitted.

c. Contractor shall prepare and incorporate and incorporate into the schedule database, at the required intervals, the following schedules:

1) Pre-Bid Schedules (Subnetworks): Contractor shall prepare a construction schedule for Work encompassed in each bid package. The schedule shall be sufficiently detailed as to be suitable for inclusion in the bid package as a framework for subcontract completion by the successful bidder. It shall show the interrelationships between the Work of the successful bidder and that of other subcontractors, and shall establish milestones keyed to the Project Schedule.

2) Subcontractor Construction Schedules (Subnetworks): Upon the award of each subcontract, Contractor shall jointly with the subcontractor, develop a schedule which is more detailed than the pre-bid schedule included in the bid packages, taking into account the Work schedule of the other subcontractors. The construction schedule shall include as many activities as necessary to make the schedule an effective tool for construction planning and for monitoring the performance of the subcontractor. The construction schedule also shall show pertinent activities for material purchase orders, manpower supply, shop drawing schedules and material delivery schedules.

d. Schedule Format: The Master Project Schedule and the Construction Schedule shall be planned and recorded with a Critical Path Method (CPM) schedule in the form of an activity-on-node diagram. All activity on-node diagrams shall include the Activity Identification, Activity Description, and the type of relationship between activities, including any lead or lag time.

1) No activity shall have a duration greater than fourteen (14) work days or less than one (1) work day. If requested by Owner or Design Professional, Contractor shall furnish any information needed to justify the reasonableness of activity durations. Such information shall include, but not be limited to, estimated activity manpower, anticipated quantities, and production rates.

2) Procurement shall be identified with at least two (2) activities: fabrication and delivery. Ensure that all work activities that require a submittal are preceded by submittal and approval activities.

3) Only contractual constraints shall be shown in the schedule logic. No other restraints are allowed unless approved by the Owner or Design Professional. The disallowance of constraints includes the use of activity mandatory start and finish dates.

4) Activities shall be identified by codes to reflect the responsible party for the accomplishment of each activity (only one party per activity), the Phase/Stage of the Project for each activity, and the Area/Location of each activity

5) The construction time for the entire Project, or any milestone, shall not exceed the specified Contract time. Logic or activity durations shall be revised in the event that any milestone or Contract completion date is exceeded in the schedule.

6) “Float” is defined as the amount of time between when an activity “can start” (the early start) and when an activity “must start” (the late start). It is understood by the Owner and the Contractor that float is a shared commodity, not for the exclusive use or financial benefit of either party. Either party has the full use of the float until it is depleted.

7) The CPM schedules must be compatible with Primavera software (Oracle) or an as-equal system approved by Owner.

8) Initial Schedule Submittal Requirements:

   i) Predecessor/Successor Sort
   Total Float/Early Start Sort
   Responsibility/Early Start Sort
   Area/Early Start Sort

   ii) Logic Diagram: Produce diagram with not more than 100 activities per ANSI D (24-inch x 36-inch) size sheet. Ensure each sheet includes title, match data or diagram correlation, and key to identify all components used in the diagram.

   iii) Narrative discussing general approach to completion of the work.

   iv) CD in Primavera format.

9) Schedule Update Requirements: The Contractor shall update the schedules monthly to show actual, current progress. The submission date of the updates shall be determined by Owner, as outlined above. The schedule updates shall be submitted within seven (7) calendar days of the data dates. Owner may require submission of the updated schedule on CD prior to submission of the full update package. Should Contractor fail to provide an update, Owner may withhold payment of the current monthly progress estimate until the monthly scheduled update is submitted. The updates shall include:

   i) Dates of activities' actual starts and completions.

   ii) Percent of work remaining for activities started but not completed as of the update date.

   iii) Narrative report including a listing of monthly progress, the activities that define the critical path and any changes to the path of critical activities from the previous update, sources of delay, any potential problems, requested logic changes, and work planned for the next month.

   iv) Predecessor/Successor Sort

   v) Total Float/Early Start Sort

   vi) Responsibility/Early Start Sort

   vii) Area/Early Start Sort

   viii) CD in Primavera format

   ix) Fragnet of logic diagram for all requested logic changes.

   x) Updated logic diagram as required by Owner. At a minimum, Owner shall require a final logic diagram at the end of the Project showing the planned and actual starts and completions.

   xi) A bar chart comparison of the updated schedule to the initial schedule. This diagram shall show actual and planned performance dates for all completed activities.

   xii) All update information shall be an accurate representation of the actual Project progress.

d. Recovery Schedule: If the initial schedule or current updates fail to reflect the Project's actual plan or method of operation, or a contractual milestone date is more than thirty (30) days behind, Owner may require that a recovery schedule for completion of the remaining Contract work be submitted. The Recovery Schedule must be submitted within seven (7) calendar days of Owner's request. The Recovery Schedule shall describe in detail Contractor's plan to complete the remaining Contract work by the Contract milestone date. The Recovery Schedule submitted shall meet the same requirements as the Initial Schedule. The narrative submitted with the Recovery Schedule should describe in detail all changes that have been made to meet the Contract milestone date.

e. Change Orders: When a Change Order is proposed, Contractor must identify all logic changes as a result of the Change Order. Contractor shall include, as part of each Change Order proposal, a sketch showing all schedule logic revisions, duration changes, and the relationships to other activities in the approved Initial Schedule. This sketch shall be known as the fragnet for the change. Upon acceptance of the fragnet, Contractor will revise the Initial Schedule or current update. The logic changes required by the Change Order will be considered incidental to Contractor's work. No separate payment will be made.

f. Schedule Revisions to Utility Work: Contractor shall provide owners of Underground Facilities ten (10) days' notice when revisions in the schedule of work affect operations of an Underground Facility unless previous arrangements have been made with the company involved.

4. Cost Control subsystem: The operation of this subsystem shall provide Sufficient timely cos data and detail to permit Contractor to control and adjust the Project requirements, needs, materials, equipment and systems by building and site elements so that the Work will be completed at a cost which, together with all other Project costs, will not exceed the Contract Price.

5. Project Accounting Subsystem: This subsystem shall enable Contractor to Plan effectively and Owner to monitor and control the funds available for the Project, cashflow, costs, Change Orders, payments, and other major financial factors by comparison of budget, estimate, total commitment, amounts invoices, and amounts payable, and also enable Owner to stay informed as to the overall Project status. All reports to be generated as part of this subsystem shall be consistent with the Project Funding Schedule. This subsystem will be produced and updated monthly and includes the following reports:

   a. A Costs Status Report representing the budget, estimate, and base commitment (awarded subcontracts and purchase orders) for any given subcontract or budget line item. It shall show approved Change Orders for each subcontract or budget line item. It shall show approved Change Orders for each subcontract which when added to the base commitment will become the total commitment. Pending Change Orders also will be shown to produce the total estimated probable cost to complete the Work.

b. A Payment Status Report showing the value in place (both current and cumulative), the amount invoiced (both current and cumulative), and the balance remaining. A summary of this report shall accompany each pay request.

c. A Detailed Status Report showing the complete activity history of each item in the Project accounting structure. It shall include the budget, estimate, and base commitment figures for each subcontract. It shall give the Change Order history, including Change Order numbers, description, proposed and approved dollar amounts. It also shall show all pending or rejected Change Orders.

d. A Cash Flow Diagram showing the projected accumulation of cash payments against the Project. Cash flow projections shall be generated for anticipated monthly payments as well as cumulative payments.

e. A Job Ledger shall be maintained as necessary to supplement the operation of the Project accounting subsystem. The job ledger will be used to provide construction cost accountability for general conditions work, on-site reimbursable expenses, and costs requiring accounting needs.

ARTICLE 4 – COMMENCEMENT AND PROGRESS OF THE WORK

SC-4.02 Starting the Work

SC-4.02.B Add the following new paragraphs immediately after Paragraph 4.02.A:

B. Contractor shall have the sole responsibility of satisfying itself concerning the nature and location of the Work and the general and local conditions, and particularly, but without limitation, with respect to the following: those affecting transportation, access, legal disposal, handling and storage of materials; availability and quality of labor; water and electric power; availability and condition of roads; work area; living facilities; climatic conditions and seasons; physical conditions at the Site and the Project area as a whole; topography and ground surface conditions; nature and quantity of the surface materials to be encountered; subsurface conditions; equipment and facilities needed preliminary to and during performance of the Work; and all other costs associated with such performance. The failure of Contractor to acquaint itself with any applicable conditions shall not relieve Contractor from any of its responsibilities to perform under the Contract Documents, nor shall it be considered the basis for any claim for additional time or compensation.

ARTICLE 5 – AVAILABILITY OF LANDS; SUBSURFACE AND PHYSICAL CONDITIONS; HAZARDOUS ENVIRONMENTAL CONDITIONS

SC-5.03 Subsurface and Physical Conditions

SC-5.05F Add the following new paragraph immediately after Paragraph 5.05.E:

F. If during the performance of the Work, Contractor or any subcontractor, sub-subcontractor, agent, employee or anyone else for whom Contractor is legally liable, causes a disruption of utility service to other facilities or customers within and immediately surrounding the Project area, Contractor shall take all actions necessary and required to immediately restore such utility service. If Contractor fails to take such immediate actions Owner shall have the right to take whatever actions it deems necessary and required to immediately restore the disrupted utilities, and all costs incurred by Owner as a result thereof shall be reimbursed to Owner by Contractor within five (5) business days of written demand for same from Owner.

SC-5.06 Hazardous Environmental Conditions

SC 5.06 Delete Paragraphs 5.06.A and 5.06.B in their entirety and insert the following:

A. No reports or drawings related to Hazardous Environmental Conditions at the Site are known to Owner.

B. Not Used.

ARTICLE 6 – BONDS AND INSURANCE

SC-6.03 Contractor's Insurance

SC 6.03K Add the following new paragraphs immediately after Paragraph 6.03.J:

K. The limits of liability for the insurance required by Paragraph 6.03 of the General Conditions shall provide coverage for not less than the following amounts or greater where required by Laws and Regulations:

1. Workers' Compensation, and related coverages under Paragraphs 6.03.A.1 and A.2 of the General Conditions:

State:		Ch. 440, Fla. Stat.
Federal, if applicable (e.g., Longshoreman's):		N/A
Jones Act coverage, if applicable:		
Bodily injury by accident, each accident	$	N/A
Bodily injury by disease, aggregate	$	N/A
Employer's Liability:		
Bodily injury, each accident	$	100,000
Bodily injury by disease, each employee	$	100,000
Bodily injury/disease aggregate	$	500,000

2. Contractor's Commercial General Liability under Paragraphs 6.03.B and 6.03.C of the General Conditions:

General Aggregate	$ 2,000,000
Products - Completed Operations Aggregate	$ 2,000,000
Personal and Advertising Injury	$ 1,000,000
Each Occurrence (Bodily Injury and Property Damage)	$ 1,000,000

3. Automobile Liability under Paragraph 6.03.D. of the General Conditions:

Bodily Injury:

Each person	$ 1,000,000
Each accident	$ 1,000,000

Property Damage:

Combined Single Limit of	$ 1,000,000

4. Excess or Umbrella Liability:

Per Occurrence	$ 1,000,000
General Aggregate	$ 1,000,000

5. Contractor's Pollution Liability:

Each Occurrence	$ N/A
General Aggregate	$ N/A

☒ If box is checked, Contractor is not required to provide Contractor's Pollution Liability insurance under this Contract

6. Additional Insureds: In addition to Owner and Engineer, include as additional insureds the following: None.

7. Contractor's Professional Liability:

Each Claim	$
Annual Aggregate	$

L. Promptly after written Notice of Award is issued by Owner, the insurance coverages and limits required must be evidenced by properly executed Certificates of Insurance on the form which is attached hereto and made a part hereof as Exhibit A. The certificates must be personally, manually signed by the Authorized

Representatives of the insurance company/companies shown on the certificates with proof that he/she is an authorized representative thereof. In addition, certified, true and exact copies of all insurance policies required shall be provided to Owner, on a timely basis, if requested by Owner. These certificates and policies shall contain provisions that thirty (30) days written notice by registered or certified mail shall be given the Owner of any cancellation, intent not to renew, or reduction in the policies' coverages, except in the application of the Aggregate Limits Provisions. Contractor also shall notify Owner, in a like manner, within twenty-four (24) hours after receipt, of any notices of expiration, cancellation, non-renewal or material change in coverages or limits received by Contractor from its insurer, and nothing contained herein shall relieve Contractor of this requirement to provide notice. In the event of a reduction in the aggregate limit of any policy, the Contractor shall immediately take steps to have the aggregate limit reinstated to the full extent permitted under such policy.

M. All insurance policies required by this Agreement shall include the following provisions and conditions by endorsement to the policies:

1. The term “City of Largo, Florida” shall include City of Largo, Florida, a Florida municipal corporation, and all Authorities, Boards, Bureaus, Commissions, Divisions, Departments and offices thereof and individual members, employees, elected officials, volunteers, representatives, agents and attorneys, thereof in their official capacity, and/or while acting on behalf of the City of Largo, Florida.

2. All insurance policies, other than the Professional Liability policy and the Workers Compensation policy, provided by Contractor to meet the requirements of this Agreement shall name City of Largo, Florida, as that name is defined in subparagraph 1. above, as an additional insured as to the operations of the Contractor under the Contract Documents and shall contain a severability of interests provision.

3. Companies issuing the insurance policy or policies shall have no recourse against Owner for payment of premiums or assessments for any deductibles which all are at the sole responsibility and risk of Contractor.

4. All insurance coverages of the Contractor shall be primary to any insurance or self-insurance program carried by the Owner applicable to this Project, and the “Other Insurance” provisions of any policies obtained by Contractor shall not apply to any insurance or self-insurance program carried by Owner applicable to this Project.

N. The acceptance by Owner of any Certificate of Insurance for this Project evidencing the insurance coverages and limits required in the Agreement does not constitute approval or agreement by Owner that the insurance requirements have been met or that the insurance policies shown on the Certificates of Insurance are in compliance with the requirements of the Agreement.

O. No work shall commence at the Site unless and until the required Certificates of Insurance are received and the written Notice to Proceed is issued to Contractor by Owner.

P. Before starting and until acceptance of the work by Owner, Contractor shall procure and maintain insurance of the types and to the limits specified in Article 6 of the General Conditions and related Supplementary Conditions. Contractor shall require

each of its Subcontractors to procure and maintain, until the completion of that Subcontractor's work, insurance of the same types and the limits, unless such insurance requirement for the Subcontractor is expressly waived in writing by the Owner. Subcontractors performing Work on the Project costing an amount equal to or exceeding $400,000 shall be obligated to maintain a minimum of $1,000,000 in umbrella liability coverage/excess liability coverage. This provision shall not affect any other types or amounts of insurance required to be obtained and/or maintained by the Contractor or any subcontractor performing the Work.

Q. If any insurance provided pursuant to this Agreement expires prior to the completion of the Work, renewal Certificates of Insurance and, if requested by Owner, certified, true copies of the renewal policies, shall be furnished to Owner prior to the date of expiration.

R. Should at any time Contractor not maintain the insurance coverages required in this Agreement, Owner may cancel the Agreement or at its sole discretion shall be authorized to purchase such coverages and charge Contractor for such coverages purchased. If Contractor fails to reimburse Owner for such costs within thirty (30) days after demand, Owner has the right to offset these costs from any amount due Contractor under this Agreement. Owner shall be under no obligation to purchase such insurance, nor shall it be responsible for the coverages purchased or the insurance company/companies used. The decision of Owner to purchase such insurance coverages shall in no way be construed to be a waiver of its rights under this Agreement.

S. Contractor shall immediately submit to Owner and Design Professional a copy of all accident reports arising out of any injuries to its employees or those of any firm or individual to whom it may have subcontracted a portion of the Work, or any personal injuries or property damages arising or alleged to have arisen on account of any work by Contractor under the Contract Documents.

T. The Owner shall be exempt from, and in no way liable for, any sums of money that may represent a deductible in any insurance policy except deductibles as agreed to by Owner in obtaining Builder's Risk Property Insurance. The payment of any deductible, with the exception of the aforementioned deductible to obtain Builder's Risk Property Insurance for the Project, shall be the sole responsibility of Contractor and/or Subcontractor providing such insurance.

SC-6.05 Property Insurance

SC-6.05.A. Delete Paragraph 6.05.A of the General Conditions and substitute the following new language in its place:

Contractor shall provide and maintain installation floater insurance for property under the care, custody, or control of Contractor. The installation floater insurance shall be a broad form or “all risk” policy providing coverage for all materials, supplies, machinery, fixtures, and equipment that will be incorporated into the Work. Coverage under the Contractor’s installation floater will include:

1. any loss to property while in transit,
2. any loss at the Site, and
3. any loss while in storage, both on-site and off-site.

Coverage cannot be contingent on an external cause or risk, or limited to property for which the Contractor is legally liable. The Contractor will be solely responsible for any deductible carried under this coverage and claims on materials, supplies, machinery, fixture, and equipment that will be incorporated into the Work while in transit or in storage. This policy will include a waiver of subrogation applicable to Owner, Contractor, Engineer, all Subcontractors, and the officers, directors, partners, employees, agents and other consultants and subcontractors of any of them.

ARTICLE 7 – CONTRACTOR'S RESPONSIBILITIES

SC-7.02 Labor; Working Hours

SC-7.02.B. Delete Paragraph 7.02.B of the General Conditions and substitute the following new language in its place:

Except as otherwise required for the safety or protection of persons or the Work or property at the Site adjacent thereto, all Work at the Site shall be performed during regular working hours, 8:00 a.m. through 5:00 p.m. Contractor will not perform Work on a Saturday, Sunday, or any City holiday; New Year's Day, ML King Day, Presidents' Day, Memorial Day, Independence Day, Labor Day, Veterans Day, Thanksgiving Day and following day, Christmas Eve, and Christmas Day. In its sole and absolute discretion, Owner may in writing authorize Contractor to perform work outside regular working hours, in which case Contractor must use equipment engine silencers approved by Owner.

SC-7.02.C. Add the following new paragraph immediately after Paragraph 7.02.B:

C. Contractor shall be responsible for the cost of any overtime pay or other expense incurred by the Owner for Engineer's services (including those of the Resident Project Representative, if any), Owner's representative, and construction observation services, occasioned by the performance of Work on Saturday, Sunday, any legal holiday, or as overtime on any regular work day. If Contractor is responsible but does not pay, or if the parties are unable to agree as to the amount owed, then Owner may impose a reasonable set-off against payments due under Article 15.

1. For purposes of administering the foregoing requirement, additional overtime costs are defined as $500 per day for Owner's inspectors plus actual cost of any third-party Owner's representative or other providers of services.

SC-7.05 Substitutes

SC-7.05G Add the following new paragraphs immediately after Paragraph 7.05.F:

G. If a specific means, method, technique, sequence or procedure of construction is indicated in or required by Contract Documents, Contractor may furnish or utilize a substitute means, method, technique, sequence or procedure of construction acceptable to Design Professional, if Contractor submits sufficient information to allow Design Professional to determine that the substitute proposed is equivalent to that indicated or required by the Contract Documents. The procedures for submission to and review by Design Professional shall be the same as those provided herein for substitute materials or equipment, except as provided immediately below.

SC-7.06 Concerning Subcontractors, Suppliers, and Others

SC-7.06A Add the following new paragraphs immediately after Paragraph 7.06.A:

1. Subcontractor or subcontractor's supervisory personnel must have successfully completed no less than two (2) projects of similar size and complexity within the last five (5) years.
2. Subcontractor must agree to perform no less than 15% of the subcontracted Work utilizing its own employees.
3. Contractor shall not subcontract with the civil engineering firm of record to perform any survey work that is required under the terms of the Contract.
4. Contractor shall not subcontract with any person or affiliate prohibited from working on a public project pursuant to sections 287.133 (convicted vendor), 287.134 (discriminatory vendor), or 287.135 (scrutinized company) of the Florida Statutes.

SC-7.06K Add the following new paragraphs immediately after Paragraph 7.06.K:

1. Contractor shall negotiate all Change Orders, field orders and request for proposals, with all affected Subcontractors and shall review the costs of those proposals and advise Owner and Design Professional of their validity and reasonableness, acting in Owner's best interest, prior to requesting approval of each Change Order from Owner. Before any Work is begun on any Change Order, a written authorization from Owner must be issued. However, when there is an eminent threat to health and safety, and Owner's concurrence is impractical, Contractor shall act immediately to remove the threats to health and safety and shall subsequently fully inform Owner of all such action taken.
2. Contractor shall carefully review all shop drawings and then forward the same to Design Professional for review and actions. Design Professional will transmit them back to the Contractor who will then issue the shop drawings to the affected Subcontractor for fabrication or revision. Contractor shall maintain a suspense control system to promote expeditious handling. Contractor shall request Design Professional to make interpretations of the drawings or specifications requested of him by the subcontractors and shall maintain a suspense control system to promote timely response. Contractor shall advise Design Professional in writing which shop drawings or requests for clarification have the greatest urgency; the purpose being to enable Design Professional to prioritize requests coming from the Contractor. The Contractor shall advise Owner and Design Professional in writing when timely response is not occurring on any of the above.

SC-7.06M Add the following new paragraphs immediately after Paragraph 7.06.M:

1. Subcontracts between the Contractor and Subcontractors shall
    a. require each Subcontractor, to the extent of the Work to be performed by the Subcontractor, to be bound to the Contractor by the terms of the Contract Documents, and to assume towards Contractor all the

obligations and responsibilities which Contractor, by the Contract Documents, assumes towards Owner and Design Professional, and

b. provide for the assignment of those subcontracts from Contractor to Owner at the election of Owner upon termination of Contractor.

2. Contractor shall make available to each proposed Subcontractor, prior to the execution of the subcontract, copies of the Contract Documents to which Subcontractor will be bound and identify to the Subcontractor any terms and conditions of the proposed subcontract which may be at variance with the Contract Documents. Each Subcontractor shall similarly make copies of such documents available to its Subcontractors.

3. On all subcontracts where the bid exceeds $100,000, Subcontractor must provide a 100% performance bond and a 100% labor and material payment bond from a surety company authorized to do business in the State of Florida by the Department of Financial Services. Owner shall be identified as an Obligee on all Performance Bonds. If Contractor wishes to award subcontracts to Subcontractors unable to supply this bonding, it may request special authorization from Owner to do so.

4. All subcontracts shall provide:

   a. Subcontractor's exclusive remedy for delays in the performance of the contract caused by events beyond its control, including delays claimed to be caused by Owner or Design Professional or attributable to Owner or Design Professional and including claims based on breach of contract or negligence, shall be an extension of its contract time (see General Condition 4.05). The subcontract shall require the Subcontractor expressly to agree that the foregoing constitutes its sole and exclusive remedies for delays and changes in the work and thus eliminate any other remedies for claim for increase in the contract price, damages, losses or additional compensation.

   b. In the event of a change in the Work approved by Owner in accordance with General Condition Article 11, Subcontractor's claim for adjustments is limited exclusively to its actual costs for such changes plus no more than 10% for overhead and profit and bond costs. Subcontractor is not entitled to any additional payments for any changes not approved by Owner in accordance with General Condition Article 11.

   c. Each subcontract shall require that any claims by Subcontractor for delay or additional cost must be submitted to Contractor within the time and in the manner in which Contractor must submit such claims to Owner under General Condition Article 11, and that failure to comply with the conditions for giving notice and submitting claims shall result in the waiver of such claims.

   d. Subcontractor must agree to provide field (onsite) supervision through a named superintendent for each trade (i.e. general concrete forming and placement, masonry, mechanical, etc.) included in the subcontract. In addition, Subcontractor shall assign and name a qualified employee for scheduling direction for its work. The supervisory employees of Subcontractor (including field superintendent, foreman and schedulers at all levels) must have been employed in a supervisory (leadership)

capacity of substantially equivalent level on a similar project for at least two (2) years within the last five (5) years. Subcontractor shall include a resume of experience for each employee identified by Subcontractor to supervise and schedule the subcontracted work.

SC-7.12 Safety and Protection

SC-7.12 A.4 – Add the following new paragraph immediately after Paragraph 7.12 A.3

4. Contractor shall provide safe access slash egress for business owners and operators, there are customers, and any other person visiting a business affected by sidewalk reconstruction.

SC-7.18 Indemnification

SC-7.18D Add the following new paragraphs immediately after Paragraph 7.18.C:

D. The obligations contained in Paragraph 7.18 shall survive termination of this Agreement and shall not be limited by the amount of any insurance required to be obtained or maintained under this Agreement. Notwithstanding the foregoing, this indemnification shall be limited to one million dollars ($1,000,000) or the Contract amount, whichever is greater, in accordance with section 725.06, Florida Statutes.

E. Subject to the limitations set forth in this Section, Contractor shall assume control of the defense of any claim asserted by a third party against Owner and, in connection with such defense, shall appoint lead counsel, in each case at Contractor's expense. Owner shall have the right, at its option, to participate in the defense of any third party claim, without relieving Contractor of any of its obligations hereunder. If Contractor assumes control of the defense of any third party claim in accordance with this paragraph, Contractor shall obtain the prior written consent of Owner before entering into any settlement of such claim. Notwithstanding anything to the contrary in Paragraph 7.18, Contractor shall not assume or maintain control of the defense of any third party claim, but shall pay the fees of counsel retained by Owner and all expenses, including experts' fees, if (i) an adverse determination with respect to the third party claim would, in good faith judgment of Owner, be detrimental in any material respect to Owner's reputation; (ii) the third party claim seeks an injunction or equitable relief against Owner; or (iii) Contractor has failed or is failing to prosecute or defend vigorously the third party claim. Each party shall cooperate, and cause its agents to cooperate, in the defense or prosecution of any third party claim and shall furnish or cause to be furnished such records and information, and attend such conferences, discovery proceedings, hearings, trials, or appeals, as may be reasonably requested in connection therewith.

SC-7.20 Review and Commentary Services

SC-7.20 Add the following new paragraph immediately after Paragraph 7.19:

7.20 Review and Commentary Services

A. Contractor shall arrange for all job site facilities as required by Owner and necessary to enable Contractor and Design Professional to perform their respective duties and to accommodate any representatives of Owner which Owner may choose to have present on the job. Tangible personal property, otherwise referred to as job site facilities, include, but are not limited to such things as

trailers, toilets, typewriters, computers and any other equipment necessary to carry on the Project.

1. The method of acquiring any such job site facilities, which are planned to become the property of Owner at the conclusion of the Project, shall be evaluated based on cost over the life of the Project. Owning versus leasing shall be considered by Contractor obtaining at least three (3) proposals for leasing and at least three (3) proposals for purchasing and then analyzing which is least expensive over the usage life of the item. Contractor shall present its evaluation with recommendation to Owner for approval.

2. When Contractor wishes to supply job site facilities from its own equipment pool, Contractor shall first evaluate buy versus lease as discussed in the paragraph above. If leasing is found to be the least expensive approach, then Contractor may lease such job-site facilities from its own equipment pool at a price not greater than the lowest of the three (3) lease proposals obtained.

3. For all such job site facilities purchased, which may become the property of Owner at the conclusion of the Project, Contractor shall maintain ownership responsibilities of such facilities until the Project conclusion. Reimbursement for cost of such equipment will be made at the conclusion of the Project at the documented purchase price. At that time, Contractor shall provide Owner with a complete inventory for each unit of equipment. The inventory shall describe the equipment and identify the purchase price, serial number, model number and condition. Where said equipment has a title, said title shall be properly transferred to Owner or to its designee.

4. Contractor is responsible for proper care and maintenance of all equipment while in Contractor's control. At the time of transfer to Owner, Owner may refuse acceptance of the equipment if Owner determines, in its sole discretion, that the equipment has not been properly cared for by Contractor or that such acquisition would not otherwise be in the best interest of Owner.

B. <u>DISCLAIMER OF WARRANTY: THE OWNER DISCLAIMS ANY WARRANTY THAT THE CONSTRUCITON DOCUMENTS FOR THE PROKJECT ARE ACCURATE, PRACTICAL, CONSISTENT OR CONSTRUCTABLE.</u>

SC-7.21 Project Management Services

SC-7.21 Add the following new paragraph immediately after Paragraph 7.20:

7.21 Project Management Services

A. Contractor shall maintain sufficient off-site support staff, and competent full time staff at the Project site authorized to act on behalf of the Contractor to coordinate, inspect and provide general direction of the Work and progress of the subcontractors. Contractor shall provide no less than those personnel during the respective phases of construction that are set forth in **Exhibit C** to the Agreement. The Contractor shall not change any of those persons identified in **Exhibit C** unless mutually agreed to in writing by the Owner and Contractor. In such case, Owner shall have the right to approve the qualifications of the replacement personnel.

B. Contractor shall establish and maintain lines of authority for its personnel, and shall provide this information to Owner and all other affected parties, such as the code inspectors of any permitting authority, the subcontractors, and Design Professional to provide general direction of the Work and progress of the various phases and subcontractors. Owner and Design Professional may attend meetings between Contractor and Subcontractors; however, such attendance is optional and shall not diminish either the authority or responsibility of the Contractor to administer the subcontracts.

C. Contractor shall provide Owner, its representatives, and Design Professional with copies of the Project Management Plan developed and updated as required herein, employing the Construction Phase milestones, beginning and finishing dates, the various parties' respective responsibilities for performance and the relationships of their Work with respect to Subcontractors and suppliers. Contractor also shall continue to provide current scheduling information and provide direction and coordination regarding milestones, beginning and finishing dates, responsibilities for performance and the relationships of Contractor's Work to the Work of Subcontractors and suppliers to enable them to perform their respective tasks so that the construction progresses in a smooth and efficient manner in conformance with the overall Master Project Schedule. The schedule shall include all phases of the construction Work, material supplies, long lead procurement, approval of shop drawings, change orders in progress, schedules for change orders, and performance testing requirements. Contractor shall advise Owner, its representatives, and Design Professional of their required participation in any meeting or inspection giving each at least one week notice unless such notice is made impossible by conditions beyond Contractor's fault and control. Contractor shall hold jobsite meetings at least once each month with the construction team and at least once each week with the subcontractors, Design Professional's field representative, and Owner's representative, or more frequently as required by Work progress, to review progress, discuss problems and their solutions and coordinate future Work with all Subcontractors.

D. Contractor shall develop and maintain a program, acceptable to Owner and Design Professional, to assure quality control of the Work. Contractor shall be responsible for and supervise the Work of all Subcontractors, providing instructions to each when their portion of the Work does not conform to the requirements of the Construction Documents, and Contractor shall continue to exert its influence and control over each Subcontractor to ensure that corrections are made in a timely manner so as to not affect the efficient progress of the Work. Should a disagreement occur between Contractor and Design Professional over the acceptability of the Work, Owner, in its sole discretion, shall have the right to determine the acceptability.

E. Contractor shall secure all necessary permits from any permitting authorities. Contractor, with assistance from Design Professional, will obtain all necessary site, SWFWMD and utility permits. All costs incurred by Contractor with respect to performing its obligations under this paragraph shall be paid for by Owner. Owner shall fully cooperate with the Contractor where necessary.

F. The Contractor shall provide or maintain the following at the job site:

1. Maintain a log of daily activities, including manpower records, weather, delays, major decisions, etc.

2. Maintain a roster of companies on the Project with names and telephone numbers of key personnel.

3. Establish and enforce job rules governing parking, clean-up, use of facilities and Worker discipline.

4. Provide labor relations management for a harmonious, productive project.

5. Provide and administer a safety program for the Project to meet OSHA and other governmental requirements. Monitor Subcontractor compliance with that safety program.

6. Provide and administer a quality control program as developed pursuant to the Contract terms.

7. Provide miscellaneous office supplies that support the construction efforts which are consumed by Contractor's own forces.

8. Provide for travel to and from Contractor's home office to the Project site and City of Largo as the Project requires.

G. Contractor shall provide personnel and equipment, or shall arrange for separate Subcontractors, to provide each of the following as a direct cost item:

1. Services of independent testing laboratories and provide the necessary testing of materials to ensure conformance with the Contract Documents.

2. Printing and distributing of all required bidding documents and shop drawings, including the sets required by any permitting authority's inspectors.

H. Contractor shall provide job site administration functions during construction to assure proper documentation, including but not limited to the following:

1. *Job Meetings*

a. Conduct a pre-construction conference with each Subcontractor after award of the subcontract and prior to the start of its portion of the Work.

b. Conduct weekly progress and coordination meetings to provide for a timely completed Project.

c. Conduct monthly Project status meetings with Design Professional and Owner.

d. Use the job site meetings as a tool for the pre-planning of Work and enforcing schedules, and for establishing procedures, responsibilities, and identification of authority for all parties to clearly understand.

e. Identify party or parties responsible for following up on any problems, delay items or questions raised at meetings. Note the action to be taken by such party or parties. Revisit each pending item at each subsequent meeting until resolution is achieved. Attempt to obtain from all present any problems or delaying event known to them for appropriate attention and resolution.

2. Provide staff to review and approve shop drawings and to implement procedures for submittal and transmittal to Design Professional of such drawings for action, and closely monitor their submittal and approval process.

3. Provide staff to closely monitor material and equipment deliveries, perform critically important checking and follow-up procedures on supplier commitments for all Subcontractors and maintain a material and equipment expediting log.

4. Develop and implement a procedure for the review, processing and payment of applications by Subcontractors for progress and final payments.

5. Refer all questions for interpretation of the Contract Documents to Design Professional in writing.

6. Record the progress of the Project. Submit written progress reports to Owner and Design Professional, including information on Subcontractors' Work, and the percentage of completion. Keep a daily log available to Owner, Design Professional, and any permitting authority inspectors.

7. Prepare periodic punch lists for Subcontractors' work including unsatisfactory or incomplete items and schedules for their completion.

8. Ascertain when the Work or designated portions thereof are ready for Design Professional's substantial completion inspections. From the punch lists of incomplete or unsatisfactory items prepared by Contractor and reviewed and supplemented by Design Professional, prepare a schedule for their completion indicating completion dates for Owner's review. Design Professional will issue a Certificate of Substantial Completion when the Work on the list has been accomplished and Substantial Completion has been achieved as otherwise required hereunder.

9. Monitor Subcontractors' performance on the completion of the Project and provide notice to Owner and Design Professional that the Work is ready for final inspection. Secure and transmit to Owner, through Design Professional, all required guarantees, warranties, affidavits, releases, bonds and waivers, manuals, record drawings, and maintenance books.

10. With Owner's personnel, direct the check-out of utilities, operations, systems and equipment for readiness and assist in their initial start-up and testing by the Subcontractors.

11. Monitor the progress of Contractor’s own forces and its Subcontractors on marked up field prints, which at Project completion Contractor shall develop into the final record drawings.

I. Contractor shall maintain at the Project site, originals or copies of, on a current basis, files and administrative records such as, but not limited to the following, which shall be available at all times to Owner and Design Professional for reference or review:

1. Subcontracts and Purchase Orders
2. Shop Drawing Submittal/Approval Logs
3. Equipment Purchase/Delivery Logs
4. Contract Drawings and Specifications with Addenda
5. Warranties and Guarantees
6. Cost Accounting Records
7. Labor Costs
8. Material Costs
9. Equipment Costs
10. Cost Proposal Request

11. Payment Request Records
12. Meeting Minutes
13. Cost-Estimates
14. Bulletin Quotations
15. Lab Test Reports
16. Insurance Certificates and Bonds
17. Contract Changes
18. Permits
19. Material Purchase Delivery Logs
20. Technical Standards
21. Design Handbooks
22. "As-Built" Marked Prints
23. Operating & Maintenance Instruction
24. Daily Progress Reports
25. Monthly Progress Reports
26. Correspondence Files
27. Transmittal Records
28. Inspection Reports
29. Punch Lists
30. PMIS Schedule and Updates
31. Suspense (Tickler) Files of Outstanding Requirements
32. Project Management Plan

J. Contractor shall keep all records and supporting documentation which concern or relate to the Work hereunder for a minimum of fifteen (15) years from the date of termination of this Agreement or the date the Project is completed, or such longer period of time as may be required by law, whichever is longer. Owner, or any duly authorized agents or representatives of Owner, shall have the right to audit, inspect and copy all such records and documentation as often as they deem necessary during the period of this Agreement and during the fifteen (15) year period noted above; provided, however, such activity shall be conducted only during normal business hours.

ARTICLE 9 – OWNER'S RESPONSIBILITIES

SC-9.13 Owner's Site Representative

SC-9.13 Add the following new paragraph immediately after Paragraph 9.12 of the General Conditions:

SC-9.13 Owner will furnish an Owner's Site Representative ("OSR") to represent Owner at the Site and assist Owner in observing the progress and quality of the Work. OSR is not Engineer's consultant, agent, or employee. OSR will be assigned by Owner. The authority and responsibilities of OSR follow:

A. General: OSR's dealings in matters pertaining to the Work in general shall be with Engineer and Contractor. OSR's dealings with Subcontractors shall only be through or with the full knowledge and approval of Contractor.

B. Schedules: Review the progress schedule, schedule of Shop Drawing and Sample submittals, and Schedule of Values prepared by Contractor and consult with

Engineer concerning acceptability. OSR will participate in such review, but the exchange of information will be between Contractor and Engineer.

C. Conferences and Meetings: Attend meetings with Contractor, such as preconstruction conferences, progress meetings, job conferences, and other Project-related meetings, and prepare and circulate copies of minutes thereof.

D. Liaison:

1. Working principally through Contractor's authorized representative or designee, assist in providing information regarding the provisions and intent of the Contract Documents.

2. Serve as Owner's liaison with Contractor when Contractor's operations affect Owner's on-Site operations.

3. Provide from Owner additional details or information, when required for proper execution of the Work.

E. Interpretation of Contract Documents: Consult with Engineer when clarifications and interpretations of the Contract Documents are needed. OSR will participate in such consultations, and the exchange of information, including clarifications and interpretations as issued by Engineer, will be between Contractor and Engineer through OSR.

F. Shop Drawings and Samples:

1. Participate in review of Samples and Contractor-approved Shop Drawings. Exchange of Samples, Shop Drawings, and related information shall be between Contractor and Engineer.

2. Advise Engineer and Contractor of the commencement of any portion of the Work requiring a Shop Drawing or Sample submittal for which OSR believes that the submittal has not been approved by Engineer.

G. Modifications: Consider and evaluate Contractor's suggestions for modifications in Drawings or Specifications and report OSR's recommendations, if any, to Engineer. Exchange of Contractor's suggestions and Engineer's decisions shall be between Contractor and Engineer through OSR.

H. Review of Work and Rejection of Defective Work:

1. Conduct on-Site observations of Contractor's work in progress to assist Engineer in determining if the Work is in general proceeding in accordance with the Contract Documents.

2. Report to Engineer whenever OSR believes that any part of Contractor's work in progress is defective, will not produce a completed Project that conforms generally to the Contract Documents, or will imperil the integrity of the design concept of the completed Project as a functioning whole as indicated in the Contract Documents, or has been damaged, or does not meet the requirements of any inspection, test or approval required to be made; and advise Engineer of that part of work in progress that OSR believes should be corrected or rejected or should be uncovered for observation, or requires special testing, inspection or approval.

I. Inspections, Tests, and System Start-ups:

1. Verify that tests, equipment, and systems start-ups and operating and maintenance training are conducted in the presence of appropriate Owner's personnel, and that Contractor maintains adequate records thereof.

2. Observe and record appropriate details relative to the test procedures and systems start-ups.

J. Records:

1. Prepare a daily report or keep a diary or log book, recording Contractor's hours on the Site, Subcontractors present at the Site, weather conditions, data relative to questions of Change Orders, Field Orders, Work Change Directives, or changed conditions, Site visitors, deliveries of equipment or materials, daily activities, decisions, observations in general, and specific observations in more detail as in the case of observing test procedures; and send copies to Engineer.

2. Record names, addresses, fax numbers, e-mail addresses, web site locations, and telephone numbers of all Contractors, Subcontractors, and major Suppliers of materials and equipment.

3. Maintain records for use in preparing Project documentation.

K. Reports:

1. Furnish to Owner periodic reports as required of progress of the Work and of Contractor's compliance with the Progress Schedule and schedule of Shop Drawing and Sample submittals.

2. Immediately notify Owner and Engineer of the occurrence of any Site accidents, emergencies, acts of God endangering the Work, force majeure or delay events, damage to property by fire or other causes, or the discovery of any Constituent of Concern or Hazardous Environmental Condition.

L. Payment Requests: Review applications for payment with Contractor for compliance with the established procedure for their submission and forward with recommendations for payment, noting particularly the relationship of the payment requested to the Schedule of Values, Work completed, and materials and equipment delivered at the Site but not incorporated in the Work.

M. Certificates, Operation and Maintenance Manuals: During the course of the Work, verify that materials and equipment certificates, operation and maintenance manuals and other data required by the Contract Documents to be assembled and furnished by Contractor are applicable to the items actually installed and in accordance with the Contract Documents.

N. Completion:

1. Participate in Engineer's visits to the Site to determine Substantial Completion, assist in the determination of Substantial Completion and the preparation of a punch list of items to be completed or corrected.

2. Participate in Engineer's final visit to the Site to determine completion of the Work, in the company of Contractor, and prepare a final punch list of items to be completed and deficiencies to be remedied.

3. Observe whether all items on the final list have been completed or corrected and make recommendations to Engineer concerning acceptance and issuance of the notice of acceptability of the work.

O. OSR shall not:

1. Authorize any deviation from the Contract Documents or substitution of materials or equipment (including "or-equal" items).
2. Exceed limitations of Owner's authority as set forth in the Contract Documents.
3. Undertake any of the responsibilities of Engineer, Contractor, Subcontractors, or Suppliers.
4. Advise on, issue directions relative to, or assume control over any aspect of the means, methods, techniques, sequences or procedures of Contractor's work.
5. Advise on, issue directions regarding, or assume control over security or safety practices, precautions, and programs in connection with the activities or operations of Contractor.
6. Nothing contained herein shall relieve the Contractor of the responsibility for the means, methods, techniques, sequences or procedures of Contractor's work or the safety of the Work and the site.

ARTICLE 14 – TESTS AND INSPECTIONS; CORRECTION, REMOVAL OR ACCEPTANCE OF DEFECTIVE WORK

SC-14.03 - Defective Work

Delete paragraph 14.03 B in its entirety and insert the following in its place:

OSR's Authority: OSR has the authority to determine whether work is defective, and to reject defective work.

ARTICLE 15 – PAYMENTS TO CONTRACTOR; SET-OFFS; COMPLETION; CORRECTION PERIOD

SC-15.01 Progress Payments

SC-15.01.D Payment Becomes Due

Payment becomes due as provided in section 218.735, Florida Statutes (2021)

SC-15.01.B Applications for Payments

Add the following new subparagraphs following Paragraph 15.01.B.3:

4. Before submitting its first monthly Application for Payment, Contractor shall submit to Owner and Design Professional, for their review and approval, a revised Schedule of Values; all in FDOT format, listing the major elements of the Work and the dollar value for each element. After its approval by Owner, this revised Schedule of Values shall be used as the basis for Contractor's monthly Applications for Payment thereafter. This revised schedule shall be updated and submitted each month to OSR along with a completed and notarized copy of the Application for Payment form.
    a. The Contractor shall submit with each application for payment, payrolls, petty cash accounts, receipts, invoices, subcontractor invoices.
5. If payment is requested on the basis of materials and equipment not incorporated into the Project, but delivered and suitably stored at the site, the Application for Payment shall also be accompanied by a bill of sale, invoice or other documentation warranting that Owner has received the materials and

equipment free and clear of all liens, charges, security interests and encumbrances, together with evidence that the materials and equipment are covered by appropriate property insurance and other arrangements to protect Owner's interest therein, all of which shall be subject to Owner's satisfaction.

6. Contractor shall a notarized original copy of its monthly Application for Payment to Design Professional on or before the 25th day of each month for Work performed during the previous month. Invoices received after the 25th day of each month shall be considered for payment as part of the next month's application. Within ten (10) calendar days after receipt of each Application for Payment, OSR shall submit to Owner a Certificate for Payment in the amount recommended by Design Professional as being due and owing Contractor. Owner shall pay Contractor that portion of OSR's Certificate for Payment which Owner approves as being due and owing Contractor in accordance with the Florida Prompt Payment Act.

7. Owner shall retain five percent (5%) of the gross amount of each monthly payment request for the entirety of the Project. The sum remaining at the end of the Project shall not be fully released to Contractor until final payment is due and payable under Paragraph 15.06 of the General Conditions, as may be amended by the Supplementary Conditions. Any payment retainage shall be made in accordance with the Florida Prompt Payment Act.

8. Monthly payments to Contractor shall in no way imply approval or acceptance of Contractor's work.

SC-15.03 Substantial Completion

SC 15.03.B Add the following new subparagraph to Paragraph 15.03.B:

1. If some or all of the Work has been determined not to be at a point of Substantial Completion and will require re-inspection or re-testing by Engineer, the cost of such re-inspection or re-testing, including the cost of time, travel and living expenses, shall be paid by Contractor to Owner. If Contractor does not pay, or the parties are unable to agree as to the amount owed, then Owner may impose a reasonable set-off against payments due under Article 15.

SC-15.05 Final Inspection

SC 15.05.A Add the following new language to the end of Paragraph 15.05.A:

Owner reserves the right to inspect the Work and make an independent determination as to the Work's acceptability, even though Design Professional may have issued its recommendations. Unless and until Owner is completely satisfied, neither the final payment nor the retainage shall become due and payable. The final payment shall be the amounts withheld as retainage from the amount approved in each application for payment. Owner shall make final payment to Contractor within twenty-five (25) calendar days after the Work is fully and finally accepted by the Owner in accordance with the Florida Prompt Payment Act. Contractor’s acceptance of final payment shall constitute a full waiver of any and all claims by Contractor against Owner arousing out of or otherwise relating to the Work, except those identified in writing by Contractor as unsettled in the final application for payment. Upon the Owner’s payment in full for all Work performed under the contract documents, contractor transfers to the city all ownership and

property interests, including but not limited to any intellectual property rights, copyrights, and/or patents, in the work.

SC-15.05 Final Payment

SC 15.05.D Add the following new language to the end of Paragraph 15.05.D:

Owner shall make final payment to Contractor within thirty (30) calendar days after the Work is finally accepted by Owner, provided that Contractor first, and as an absolute condition precedent to the accrual of Contractor's right to final payment, shall have furnished Owner with properly executed and notarized copies of the final Releases and Affidavits attached as Exhibit C and Exhibit D, as well as a duly executed copy of the Surety's consent to final payment form attached to the Agreement as Exhibit E.

EJCDC
ENGINEERS JOINT CONTRACT DOCUMENTS COMMITTEE

Contractor's Application for Payment No.

	Application Period:	Application Date:
To (Owner): **City of Largo**	From (Contractor):	Via (OSR):
Project: **Trenchless Sanitary and Storm Sewer Rehabilitation Services**	Contract:	
Owner's Contract No.: **24-B-806**	Contractor's Project No.:	Engineer's Project No.: **N/A**

Application For Payment

Change Order Summary

Approved Change Orders

Number	Additions	Deductions
TOTALS	$0.00	$0.00
NET CHANGE BY CHANGE ORDERS	**$0.00**	

1. ORIGINAL CONTRACT PRICE	**$**	
2. Net change by Change Orders	**$**	**$0.00**
3. Current Contract Price (Line 1 ± 2)	**$**	**$0.00**
4. TOTAL COMPLETED AND STORED TO DATE (Column F total on Progress Estimates)	**$**	**$0.00**
5. RETAINAGE:		
a. 5% X $0.00 **Work Completed**	**$**	**$0.00**
b. 0% X $0.00 **Stored Material**	**$**	**$0.00**
c. Total Retainage (Line 5.a + Line 5.b)	**$**	**$0.00**
6. AMOUNT ELIGIBLE TO DATE (Line 4 - Line 5.c)	**$**	**$0.00**
7. LESS PREVIOUS PAYMENTS (Line 6 from prior Application)	**$**	
8. AMOUNT DUE THIS APPLICATION	**$**	**$0.00**
9. BALANCE TO FINISH, PLUS RETAINAGE (Column G total on Progress Estimates + Line 5.c above)	**$**	**$0.00**

Contractor's Certification

The undersigned Contractor certifies, to the best of its knowledge, the following:
(1) All previous progress payments received from Owner on account of Work done under the Contract have been applied on account to discharge Contractor's legitimate obligations incurred in connection with the Work covered by prior Applications for Payment;
(2) Title to all Work, materials and equipment incorporated in said Work, or otherwise listed in or covered by this Application for Payment, will pass to Owner at time of payment free and clear of all Liens, security interests, and encumbrances (except such as are covered by a bond acceptable to Owner indemnifying Owner against any such Liens, security interest, or encumbrances); and
(3) All the Work covered by this Application for Payment is in accordance with the Contract Documents and is not defective.

Contractor Signature

By:	Date:

Payment of: $ _____
(Line 8 or other - attach explanation of the other amount)

is recommended by: _____ _____
(OSR) (Date)

Payment of: $ _____
(Line 8 or other - attach explanation of the other amount)

is approved by: _____ _____
(Owner) (Date)

Approved by: _____ _____
Funding or Financing Entity (if applicable) (Date)

EJCDC® C-620 Contractor's Application for Payment
© 2013 National Society of Professional Engineers for EJCDC. All rights reserved.

EJCDC
ENGINEERS JOINT CONTRACT DOCUMENTS COMMITTEE

NOTICE OF AWARD

Date of Issuance: **_____, 2024**

Owner:	**City of Largo**	Owner's Contract No.:	**24-B-806**
Engineer:	**N/A**	Engineer's Project No.:	
Project:	**Trenchless Sanitary and Storm Sewer Rehabilitation Services**	Contract Name:	

Bidder:

Bidder's Address:

TO BIDDER:

You are notified that Owner has accepted your Bid dated _____ for the above Contract, and that you are the Successful Bidder and are awarded a **Contract for: Trenchless Sanitary and Storm Sewer Rehabilitation Services.** This project provides for the rehabilitation of pipelines and conduits (8 inch through 84 inch, and laterals) by various trenchless methods on an "as needed" basis. The trenchless pipe rehabilitation work includes wastewater and stormwater pipe cleaning, inspection, grouting, and lining services. These rehabilitation methods may be used in a variety of gravity and pressure applications such as sanitary sewers, storm sewers, and force mains.

The Contract Price of the awarded Contract is: $ 1 (subject to unit prices)

Two unexecuted counterparts of the Agreement accompany this Notice of Award, and one copy of the Contract Documents accompanies this Notice of Award, or has been transmitted or made available to Bidder electronically.

You must comply with the following conditions precedent within 7 days of the date of receipt of this Notice of Award:

1. Deliver to Owner **two** counterparts of the Agreement, fully executed by Bidder.
2. Deliver with the executed Agreement(s) the Contract security and insurance documentation as specified in the Instructions to Bidders and General Conditions, Articles 2 and 6.
3. Other conditions precedent (if any):

Failure to comply with these conditions within the time specified will entitle Owner to consider you in default, annul this Notice of Award, and declare your Bid security forfeited.

Within ten days after you comply with the above conditions, Owner will return to you one fully executed counterpart of the Agreement, together with any additional copies of the Contract Documents as indicated in Paragraph 2.02 of the General Conditions.

Owner**:** **City of Largo**

Authorized Signature

By: **Norm Shaw**

Title: **Construction manager**

Copy: Engineer

EJCDC
ENGINEERS JOINT CONTRACT DOCUMENTS COMMITTEE

NOTICE TO PROCEED

Owner:	**City of Largo**	Owner's Contract No.:	**24-B-806**
Contractor:		Contractor's Project No.:	
Engineer:	**N/A**	Engineer's Project No.:	
Project:	**Trenchless Sanitary and Storm Sewer Rehabilitation Services**	Contract Name:	
		Effective Date of Contract:	

TO CONTRACTOR:

Owner hereby notifies Contractor that the Contract Times under the above Contract will commence to run on [_____, 20__]. *[see Paragraph 4.01 of the General Conditions]*

On that date, Contractor shall start performing its obligations under the Contract Documents. No Work shall be done at the Site prior to such date. In accordance with the Agreement, the number of days to achieve Substantial Completion is _____, and the number of days to achieve readiness for final payment is _____.

Before starting any Work at the Site, Contractor must comply with the following:

[Note any access limitations, security procedures, or other restrictions]

Owner**:** **City of Largo**

Authorized Signature

By: **Norm Shaw**

Title: **Construction manager**

Date Issued:

Copy: Engineer

EJCDC
ENGINEERS JOINT CONTRACT DOCUMENTS COMMITTEE

Work Change Directive No.

Date of Issuance:		Effective Date:	
Owner:	**City of Largo**	Owner's Contract No.:	**24-B-806**
Contractor:		Contractor's Project No.:	
Engineer:	**N/A**	Engineer's Project No.:	
Project:	**Trenchless Sanitary and Storm Sewer Rehabilitation Services**	Contract Name:	

Contractor is directed to proceed promptly with the following change(s):

Description:

Attachments: *[List documents supporting change]*

Purpose for Work Change Directive:

Directive to proceed promptly with the Work described herein, prior to agreeing to changes on Contract Price and Contract Time, is issued due to: *[check one or both of the following]*

☐ Non-agreement on pricing of proposed change.

☐ Necessity to proceed for schedule or other Project reasons.

Estimated Change in Contract Price and Contract Times (non-binding, preliminary):

Contract Price $ [increase] [decrease].

Contract Time days [increase] [decrease].

Basis of estimated change in Contract Price:

☐ Lump Sum ☐ Unit Price

☐ Cost of the Work ☐ Other

RECOMMENDED:	AUTHORIZED BY:	RECEIVED:
By:	By:	By:
Engineer (Authorized Signature)	Owner (Authorized Signature)	Contractor (Authorized Signature)
Title:	Title:	Title:
Date:	Date:	Date:

Approved by Funding Agency (if applicable)

By: Date:

Title:

EJCDC
ENGINEERS JOINT CONTRACT DOCUMENTS COMMITTEE

Change Order No. _____

Date of Issuance:		Effective Date:	
Owner:	**City of Largo**	Owner's Contract No.:	**24-B-806**
Contractor:		Contractor's Project No.:	
Engineer:	**N/A**	Engineer's Project No.:	
Project:	**Trenchless Sanitary and Storm Sewer Rehabilitation Services**	Contract Name:	

The Contract is modified as follows upon execution of this Change Order:

Description:

Attachments: *[List documents supporting change]*

CHANGE IN CONTRACT PRICE	**CHANGE IN CONTRACT TIMES** *[note changes in Milestones if applicable]*
Original Contract Price: $_____	Original Contract Times: Substantial Completion: _____ Ready for Final Payment: _____ days or dates
[Increase] [Decrease] from previously approved Change Orders No. ___ to No. ___: $_____	[Increase] [Decrease] from previously approved Change Orders No. ___ to No. ___: Substantial Completion: _____ Ready for Final Payment: _____ days
Contract Price prior to this Change Order: $_____	Contract Times prior to this Change Order: Substantial Completion: _____ Ready for Final Payment: _____ days or dates
[Increase] [Decrease] of this Change Order: $_____	[Increase] [Decrease] of this Change Order: Substantial Completion: _____ Ready for Final Payment: _____ days or dates
Contract Price incorporating this Change Order: $_____	Contract Times with all approved Change Orders: Substantial Completion: _____ Ready for Final Payment: _____ days or dates

RECOMMENDED:	ACCEPTED:	ACCEPTED:
By: _____	By: _____	By: _____
Engineer (if required)	Owner (Authorized Signature)	Contractor (Authorized Signature)
Title: _____	Title _____	Title _____
Date: _____	Date _____	Date _____

Approved by Funding Agency (if applicable)

By: _____ Date:

Title: _____

EJCDC
ENGINEERS JOINT CONTRACT DOCUMENTS COMMITTEE

Field Order No. _____

Date of Issuance:		Effective Date:	
Owner:	**City of Largo**	Owner's Contract No.	**24-B-806**
Contractor:		Contractor's Project No.:	
Engineer:	**N/A**	Engineer's Project No.:	
Project:	**Project name**	Contract Name:	

Contractor is hereby directed to promptly execute this Field Order, issued in accordance with General Conditions Paragraph 11.01, for minor changes in the Work without changes in Contract Price or Contract Times. If Contractor considers that a change in Contract Price or Contract Times is required, submit a Change Proposal before proceeding with this Work.

Reference: _____ Specification(s) _____ Drawing(s) / Detail(s)

Description:

Attachments:

ISSUED:	RECEIVED:
By: _____	By: _____
Engineer (Authorized Signature)	Contractor (Authorized Signature)
Norm Shaw	
Title: **Construction Manager**	Title: _____
Date: _____	Date: _____

Copy to: Owner

EJCDC
ENGINEERS JOINT CONTRACT DOCUMENTS COMMITTEE

CERTIFICATE OF SUBSTANTIAL COMPLETION

Owner:	**City of Largo**	Owner's Contract No.:	**24-B-806**
Contractor:		Contractor's Project No.:	
Engineer:	**N/A**	Engineer's Project No.:	
Project:	**Trenchless Sanitary and Storm Sewer Rehabilitation Services**	Contract Name:	

This [preliminary] [final] Certificate of Substantial Completion applies to:

☐ All Work ☐ The following specified portions of the Work:

Date of Substantial Completion

The Work to which this Certificate applies has been inspected by authorized representatives of Owner, Contractor, and Engineer, and found to be substantially complete. The Date of Substantial Completion of the Work or portion thereof designated above is hereby established, subject to the provisions of the Contract pertaining to Substantial Completion. The date of Substantial Completion in the final Certificate of Substantial Completion marks the commencement of the contractual correction period and applicable warranties required by the Contract.

A punch list of items to be completed or corrected is attached to this Certificate. This list may not be all-inclusive, and the failure to include any items on such list does not alter the responsibility of the Contractor to complete all Work in accordance with the Contract.

The responsibilities between Owner and Contractor for security, operation, safety, maintenance, heat, utilities, insurance, and warranties upon Owner's use or occupancy of the Work shall be as provided in the Contract, except as amended as follows: *[Note: Amendments of contractual responsibilities recorded in this Certificate should be the product of mutual agreement of Owner and Contractor; see Paragraph 15.03.D of the General Conditions.]*

Amendments to Owner's responsibilities: ☐ None ☐ As follows

Amendments to Contractor's responsibilities: ☐ None ☐ As follows:

The following documents are attached to and made a part of this Certificate: *[punch list; others]*

This Certificate does not constitute an acceptance of Work not in accordance with the Contract Documents, nor is it a release of Contractor's obligation to complete the Work in accordance with the Contract.

EXECUTED BY OSR:	RECEIVED:	RECEIVED:
By: _____	By: _____	By: _____
(Authorized signature)	Owner (Authorized Signature)	Contractor (Authorized Signature)
Title: **Norm Shaw Construction Manager**	Title: **Jerald Woloszynski, PE City Engineer**	Title: _____

Date:	Date:	Date:

NOTICE OF ACCEPTABILITY OF WORK

PROJECT: Trenchless Sanitary and Storm Sewer Rehabilitation Services

OWNER: CITY OF LARGO

CONTRACTOR:

OWNER'S CONSTRUCTION CONTRACT IDENTIFICATION: 24-B-806

EFFECTIVE DATE OF THE CONSTRUCTION CONTRACT:

ENGINEER: N/A

NOTICE DATE:

To: _____
Owner

And To: _____
Contractor

From: _____
Engineer

The Engineer hereby gives notice to the above Owner and Contractor that Engineer has recommended final payment of Contractor, and that the Work furnished and performed by Contractor under the above Construction Contract is acceptable, expressly subject to the provisions of the related Contract Documents, the Agreement between Owner and Engineer for Professional Services dated _____, and the following terms and conditions of this Notice:

CONDITIONS OF NOTICE OF ACCEPTABILITY OF WORK

The Notice of Acceptability of Work ("Notice") is expressly made subject to the following terms and conditions to which all those who receive said Notice and rely thereon agree:

1. This Notice is given with the skill and care ordinarily used by members of the engineering profession practicing under similar conditions at the same time and in the same locality.

2. This Notice reflects and is an expression of the Engineer's professional opinion.

3. This Notice is given as to the best of Engineer's knowledge, information, and belief as of the Notice Date.

4. This Notice is based entirely on and expressly limited by the scope of services Engineer has been employed by Owner to perform or furnish during construction of the Project (including observation of the Contractor's work) under Engineer's Agreement with Owner, and applies only to facts that are within Engineer's knowledge or could reasonably have been ascertained by Engineer as a result of carrying out the responsibilities specifically assigned to Engineer under such Agreement.

5. This Notice is not a guarantee or warranty of Contractor's performance under the Construction Contract, an acceptance of Work that is not in accordance with the related Contract Documents, including but not limited to defective Work discovered after final inspection, nor an assumption of responsibility for any failure of Contractor to furnish and perform the Work thereunder in accordance with the Construction Contract Documents, or to otherwise comply with the Construction Contract Documents or the terms of any special guarantees specified therein.

6. This Notice does not relieve Contractor of any surviving obligations under the Construction Contract, and is subject to Owner's reservations of rights with respect to completion and final payment.

7.

By: _____

Title: _____

Dated: _____

SPECIFICATION PACKAGE

SECTION 01025

MEASUREMENT AND PAYMENT

PART 1 - GENERAL

1.01 EXPLANATION AND DEFINITIONS

The following explanation of the Measurement and Payment for the bid form items is made for information and guidance. The omission of reference to any item in this description shall not, however, alter the intent of the bid form or relieve the Contractor of the necessity of furnishing such as part of the Contract.

1.02 PAYMENT

A. Payment shall be made for the items listed on the Bid Form on the basis of the work actually performed and completed. Such work shall include, but is not limited to, the furnishing of all necessary labor, materials, equipment, transportation, clean up, and all other appurtenances to complete the construction and installation of the work, to the configuration and extent as shown on the drawings, and/or described in the specifications.

B. It is intended that all sediment and erosion control, testing, insurance, bond, license and other miscellaneous administrative costs, and all other costs to the Contractor not specifically identified in the following item description be distributed among and included in the unit prices stated. No additional payment shall be made for transportation, communications, office maintenance, project signs, maintenance of traffic, barriers, and other incidental work or services, and no further payment shall be made for re-mobilization unless all of the work is suspended by the Engineer for a period in excess of three months and through no fault to the Contractor.

C. All required manufacturer testing and certification should be included in the unit prices shown in the Proposal and Contract. Density testing required for compacted back-filling, and concrete strength and materials testing required at the time of construction shall be performed and paid for by the contractor.

PART 2 - MATERIALS

Not Used

PART 3 - EXECUTION

3.01 CURED IN PLACE PIPE (CIPP) LINING - Bid Items No. 1, 3, 5, 7,9,11, 13, 15, 17, 19, 21, 23, 25, 27, & 29

A. Payment for cured in place pipe (CIPP) lining, for the various pipe diameters, shall be made at the Contractor's corresponding unit price per linear foot of liner installed and accepted, as determined by the Engineer, in accordance with the specifications. Measurement shall be along the center line of the pipe, from wall of manhole inlet to wall of manhole inlet.

B. The Contractor unit price shall include full compensation for all labor, materials, and equipment setup, initial line cleaning, initial and final CCTV inspection, grouting of liner annular space at manholes, plugging and bypass pumping required for the complete installation of cured in place pipe (CIPP) lining, in accordance with the specifications

3.02 COST FOR EACH 1.5 MM INCREASE IN LINER THICKNESS - Bid Items No. 2, 4, 6, 8, 10, 12, 14, 16, 18, 20, 22, 24, 26, 28 & 30

A. Payment for this item will be made at the Contractors unit price per linear foot for each incremental 1.5 millimeter increase in liner thickness above the base liner thickness for each pipe diameter.

B. Payment shall be made in addition to the base bid thickness unit price per linear foot for each pipe diameter.

3.03 INITIAL SERVICE LATERAL CCTV INSPECTION, FROM MAIN, UP TO 30 LF - Bid Item No. 31

A. Initial Service Lateral CCTV inspection is defined as the preliminary inspection of a service lateral for the purpose of allowing the City to evaluate the condition of the lateral and determine what rehabilitation method(s) are needed. This definition applies to sections 3.04, 3.05. 3.06 and 3.07.

B. Payment for service lateral CCTV inspection (4" - 6" dia.), from main line, up to 30 linear feet shall be made at the Contractor's unit price per each CCTV inspection performed and accepted, as determined by the Engineer, in accordance with the specifications. Measurement shall be along the center line of the pipe, from the main line/service lateral connection to a point 30 feet up the lateral.

C. The Contractor unit price shall include full compensation for all labor, materials, and equipment setup, plugging and bypass pumping required for service lateral CCTV inspection (4" - 6" dia.), up to 30 linear feet, in accordance with the specifications.

3.04 INITIAL SERVICE LATERAL CCTV INSPECTION, FROM MAIN, BEYOND INITIAL 30 LF - Bid Item No. 32

A. Payment for service lateral CCTV inspection (4" - 6" dia.), beyond initial 30 linear feet, shall be made at the Contractor's unit price per linear foot of service lateral inspected and accepted beyond the initial 30 LF, as determined by the Engineer, in accordance with the specifications. Measurement shall be along the center line of the pipe.

B. The Contractor unit price shall include full compensation for all labor, materials, and equipment setup, plugging and bypass pumping required for service lateral CCTV inspection (4" - 6" dia.), beyond initial 30 linear feet, in accordance with the specifications.

3.05 INITIAL SERVICE LATERAL CCTV INSPECTION, FROM CLEAN-OUT, UP TO 30 LF - Bid Item No. 33

A. Payment for service lateral CCTV inspection (4" - 6" dia.), from clean-out, up to 30 linear feet shall be made at the Contractor's unit price per each CCTV inspection performed and accepted, as determined by the Engineer, in accordance with the specifications. Measurement shall be along the center line of the pipe, from the main line/service lateral connection to a point 30 feet up the lateral.

B. The Contractor unit price shall include full compensation for all labor, materials, and equipment setup, plugging and bypass pumping required for service lateral CCTV inspection (4" - 6" dia.), from clean-out, up to 30 linear feet, in accordance with the specifications.

3.06 INITIAL SERVICE LATERAL CCTV INSPECTION, FROM CLEAN-OUT, BEYOND INITIAL 30 LF - Bid Item No. 34

A. Payment for service lateral CCTV inspection (4" - 6" dia.), beyond initial 30 linear feet, shall be made at the Contractor's unit price per linear foot of service lateral inspected and accepted, as determined by the Engineer, in accordance with the specifications. Measurement shall be along the center line of the pipe.

B. The Contractor unit price shall include full compensation for all labor, materials, and equipment setup, plugging and bypass pumping required for service lateral CCTV inspection (4" - 6" dia.), beyond initial 30 linear feet, in accordance with the specifications.

3.07 CURED IN PLACE PIPE (CIPP) SERVICE LATERAL LINING, INITIAL 30 FEET - Bid Items No. 35

A. Payment for cured in place pipe (CIPP) lining and main/lateral connection system (4" - 6" dia.) shall be made at the Contractor's unit price per each liner, up to 30 feet in length, installed and accepted, as determined by the Engineer, in accordance with the specifications. Measurement shall be along the center line of the pipe, from the main line/service lateral connection to the clean-out.

B. The Contractor unit price shall include full compensation for all labor, materials, and equipment setup, initial lateral cleaning, any additional pre-installation CCTV inspection performed in addition to pay items 37 through 34, as deemed necessary by the Contractor, post CCTV inspection, plugging and bypass pumping required for the complete installation of cured in place pipe (CIPP) lining and main/lateral connection system (4" - 6" dia.), in accordance with the specifications.

3.08 CURED IN PLACE PIPE (CIPP) SERVICE LATERAL LINING, BEYOND INITIAL 30 FEET - Bid Item No. 36

A. Payment for cured in place pipe (CIPP) lining beyond the initial 30 linear feet (4" - 6" dia.) be made at the Contractor's corresponding unit price per liner foot of additional liner length, installed and accepted, as determined by the Engineer, in accordance with the specifications.

B. The Contractor unit price shall include full compensation for all labor, materials, and equipment setup, initial lateral cleaning, any additional pre-installation CCTV inspection performed in addition to pay items 37 through 34, as deemed necessary by the Contractor, post CCTV inspection, plugging and bypass pumping required for the complete installation of additional cured in place pipe (CIPP) lining (4" - 6" dia.), in accordance with the specifications.

3.09 CLEAN-OUT INSTALLATION, UP TO 5 FT. IN DEPTH - Bid Items No. 37, 38 & 39

A. Payment for service lateral clean-out installation, up to 5 feet in depth shall be made at the Contractor's unit price for the various surface conditions, per each clean-out installed and accepted, as determined by the Engineer, in accordance with the specifications. Depth measurement shall be from the existing grade to the invert elevation of the service lateral at the point of the clean-out installation.

B. The Contractor unit price shall include full compensation for all labor, materials, and equipment required for service lateral clean-out installation, including backfill, compaction and all necessary surface restoration, in accordance with the specifications.

3.10 CLEAN-OUT INSTALLATION, BEYOND 5 FT. IN DEPTH - Bid Item No. 40

A. Payment for service lateral clean-out installation, beyond 5 feet in depth shall be made at the Contractor's unit

price per vertical foot in depth beyond the initial 5 foot clean-out installation cost. Depth measurement shall be from the existing grade to the invert elevation of the service lateral at the point of the clean-out installation.

B. The Contractor unit price shall include full compensation for all labor, materials, and equipment required for service lateral clean-out installation beyond 5 feet in depth, in accordance with the specifications.

3.11 PRESSURE TEST, MAIN LINE JOINT - Bid Items No. 41, 42 & 43

A. Payment for pressure testing of main line pipe joints, for the various pipe diameters, shall be made at the Contractor's unit price per each joint tested, in accordance with the specifications.

B. The Contractor unit price shall include full compensation for all labor, materials, and equipment setup, initial line cleaning, plugging and bypass pumping required perform main line pipe joint pressure testing, in accordance with the specifications.

3.12 GROUT SEAL MAIN LINE JOINT - Bid Items No. 44, 45 & 46

A. Payment for sealing main line pipe joints with chemical grout, for the various pipe diameters, shall be made at the Contractor's unit price per each joint sealed, in accordance with the specifications.

B. The Contractor unit price shall include full compensation for all labor, materials, and equipment setup, initial line cleaning, plugging bypass pumping and all other work required to grout seal main line pipe joints, in accordance with the specifications. The Contractors unit price for main line joint grouting shall also include the cost of Warranty CCTV inspection.

3.13 GROUT SEAL SERVICE LATERAL CONNECTION - Bid Item No. 47

A. Payment for grout sealing service laterals connections, from the main line, with chemical grout, for a minimum distance of 24 inches, shall be made at the Contractor's unit price per each lateral sealed, in accordance with the specifications.

B. The Contractor unit price shall include full compensation for all labor, materials, and equipment setup, plugging and bypass pumping required to grout seal service lateral connections, in accordance with the specifications.

3.14 MOBILIZATION - Bid Items No. 48 &49

A. Payment for mobilization shall be made at the Contractor's unit price for mobilization for each task order issued, at the appropriate linear foot/lateral liner category price.

B. The Contractor unit price shall include full compensation for mobilizing all necessary staff and equipment to perform the work specified in the task order.

3.15 MAINTENANCE OF TRAFFIC - Bid Items No. 50, 51 & 52

A. Payment for maintenance of traffic shall be made at the Contractor's unit price per each day traffic maintenance is required, to perform the assigned work. Maintenance of traffic provisions must

conform to the requirements of the governmental agency having jurisdiction over the right-of-way.

B. The Contractor unit price shall include full compensation for all labor, materials, and equipment required to setup, maintain and remove all necessary maintenance of traffic provisions, in accordance with the specifications.

3.16 WORK IN REAR EASEMENTS AND/OR AWAY FROM TRAVELWAYS - Bid Item No. 53

A. Payment for work performed in rear easement areas and/or away from travel ways shall be made at the Contractor's unit price per each instance where work is necessary in these areas

B. The Contractor unit price shall include full compensation for the additional cost, including all labor, materials, and equipment required to perform work assignments in rear easements and/or way from travelways.

3.17 SPECIALTY CLEANING - Bid Items No. 54, 55, 56, 57, & 58

Payment for initial, routine, line cleaning shall be included in the unit costs for the various rehabilitation methods. Specialty cleaning is defined as the removal of material and/or debris where the level of debris is greater than 20% of the pipe diameter, or when there is the presence of grease, roots, pre-existing liner system, tuberculation or other such materials that require special cleaning equipment. The unit price for specialty cleaning shall be inclusive of any additional equipment or resources necessary for the removal and disposal of such material, and shall be paid for the actual lineal feet cleaned.

A. Payment for specialty cleaning, for the various pipe diameter ranges and categories, shall be made at the Contractor's corresponding unit price per linear foot of lines cleaned and accepted, as determined by the Engineer, in accordance with the specifications. Measurement shall be along the center line of the pipe for the actual length of pipe cleaned.

B. The Contractor unit price shall include full compensation for all labor, materials, and equipment, setup, plugging and bypass pumping required for specialty cleaning, including removal and disposal of debris materials.

3.18 HAMMER TAP REMOVAL - Bid Item No. 59

A. Payment for hammer tap removal shall be made at the Contractor's unit price per each hammer tap removed and accepted, as determined by the Engineer, in accordance with the specifications.

B. The Contractor unit price shall include full compensation for all labor, materials, and equipment, setup, plugging and bypass pumping required to cut protruding hammer taps flush with the inside surface of the pipe and removal of all resulting debris.

3.19 LATERAL REINSTATEMENT AND GROUTING - Bid Item No. 60

A. Payment for lateral reinstatement and grouting shall be made at the Contractor's unit price per each service lateral reinstated, grouted and accepted, as determined by the Engineer, in accordance with the specifications.

B. The Contractor unit price shall include full compensation for all labor, materials, and equipment, setup, plugging and bypass pumping required to reinstate the the service lateral and seal the annular space between the liner and host pipe with chemical grout.

3.20 WARRANTY CLEANING AND CCTV INSPECTION - Bid Item No. 61

A. Payment for warranty cleaning and CCTV inspection shall be made at the Contractor's corresponding unit price per linear foot of line cleaned and inspected, as determined by the Engineer, in accordance with the specifications. Measurement shall be along the center line of the pipe, from wall of manhole inlet to wall of manhole inlet.

B. The Contractor unit price shall include full compensation for all labor, materials, and equipment, setup, plugging and bypass pumping required for warranty cleaning and CCTV inspection, including removal and disposal of debris materials.

END OF SECTION

SECTION 01045

EXECUTION OF WORK

PART 1 – GENERAL

1.01 SUMMARY

A. Section Includes:

1. Contractor shall provide labor, materials, tools, equipment, and incidentals shown, specified, and required for execution of the Work as specified in this Section, including the following:

    a. Construction Electronic Documentation

    b. Demolition

    c. Cutting and Coring

    d. Patching

    e. Installation

2. Requirements for demolition, removal and disposal of existing buildings, structures, pavement, curbs, and sidewalks and electrical, plumbing, heating and ventilation equipment and materials as indicated in the Contract Documents for demolition.

3. General requirements for installation of equipment and material. Additional installation requirements are included in the individual Specification Sections.

4. General requirements for connections to existing facilities.

    a. To extent possible, materials, equipment, systems, piping, and appurtenances that will be placed into service upon completion of connection to existing facilities shall be checked, successfully tested, and in a condition for operation prior to making connections to existing facilities, if valves, gates, or similar watertight and gastight isolation devices are not provided at the connection point.

5. Requirements for cutting and coring, and rough and finish patching of holes and openings in existing construction. Provide cutting, coring, fitting, and patching, including attendant excavation and fill, required to complete the Work, and to:

    a. Remove and replace defective Work;

    b. Remove samples of installed Work as specified or required for testing;

c. Remove construction required to perform required alterations or additions to existing work;

d. Connect to completed Work not performed in proper sequence;

e. Remove or relocate existing utilities and pipes that obstruct the Work in locations where connections must be made;

f. Make connections or alterations to existing or new facilities.

1.02 REFERENCES

A. Definitions:

1. “Manufacturer’s installation instructions” includes manufacturer’s written instructions; drawings; illustrative, wiring and schematic diagrams; diagrams identifying external connections; and other such information pertaining to installation of equipment and materials. Installation instructions are printed instructions, including those attached to the equipment and materials, all inclusive.

2. “Salvage” items are equipment and materials scheduled for selective removal by the Contractor to furnish to the Owner. Contractor shall be responsible for removal, handling, and depositing of equipment and material to location designated by Owner.

B. Reference Standards:

1. 29 CFR 1910, OSHA.

2. ANSI A10.2, Safety Code for Building Construction

1.03 ADMINSTRATIVE REQUIREMENTS

A. Coordination:

1. Review installation procedures under other Sections and coordinate Work that must be performed with or before the Work specified in this Section.

2. Notify other contractors in advance of Work for connections to existing facilities to prevent delay of the Work.

3. Contractor shall remove and dispose of equipment and materials indicated for demolition on the Contract Documents, unless indicated as salvage items for the Owner. Contractor shall obtain ownership of removed equipment and materials following Engineer and Owner approval. Disposal of equipment and materials shall be in accordance with the Contract Documents.

B. Sequencing:

1. Contractor shall remove and demolish equipment and materials in sequence specified in the Contract Documents and following approval by Engineer and Owner.

2. Contractor shall replace equipment and materials removed without proper authorization from Engineer, which are necessary for the operation of the existing facilities. Re-installation of equipment and materials shall be to the satisfaction of the Engineer at no cost to the Owner.

C. Title to Equipment and Materials:

1. Equipment and materials indicated for demolition and removal in the Contract Documents, and not designated as Owner's salvaged items, shall become the Contractor's property following removal from the Site. Contractor shall be responsible for legally disposing of the equipment and material.

2. Contractor shall have no right or title to any of the equipment, materials or other items to be removed until the elements have been removed from the Site.

3. Contractor shall not sell or assign, or attempt to sell or assign any interest in the equipment, materials or other items until removal from Site.

4. Contractor shall have no claim against the Owner because of the absence of equipment, fixtures and materials.

D. Salvage Equipment and Materials:

1. Contract Documents indicate equipment and materials that shall be retained by Owner. Owner has the right to request any demolished equipment and materials be retained at their discretion.

2. Contractor shall move salvaged equipment and materials to storage areas located at the Site as instructed by Owner.

3. Architectural equipment and materials may be salvaged for incorporation into the Work when approved by Engineer.

E. Use of Explosives: Contractor shall not use explosives or blasting equipment and material in the Work in accordance with the Contract Documents.

1.04 SUBMITTALS

A. Action/Informational Submittals:

1. Construction electronic documentation as specified in this Section.

2. Demolition Plan: Submit detailed description of methods, equipment, and sequence for demolition Work.

3. Cutting and Patching Request:

    a. Submit written request to Engineer, well in advance of executing cutting or alteration that affects one or more of the following:

        1) Design function or intent of Project.

        2) Work of Owner or other contractors.

        3) Structural value or integrity of an element of the Project.

        4) Integrity or effectiveness of weather-exposed or moisture-resistant elements or systems.

        5) Efficiency, operational life, maintenance, or safety of operational elements.

        6) Visual qualities of sight-exposed elements.

    b. Request shall include:

        1) Identification of Project and contract name and number.

        2) Description of affected Work of Contractor and work of others (if any).

        3) Necessity for cutting.

        4) Effect on work of Owner, other contractors (if any), and on structural or weatherproof integrity of Project.

        5) Description of proposed Work, describing: scope of cutting and patching; trades who will be executing the Work; products proposed to be used; extent of refinishing; schedule of operations; alternatives to cutting and patching, if any.

        6) Designation of entity responsible for cost of cutting and patching, when applicable.

        7) Written permission of other contractors (if any) whose work will be impacted.

4. Recommendation Regarding Cutting and Patching:

    a. Should conditions of work, or schedule, indicate a change of materials or methods, submit written recommendation to Engineer including:

        1) Conditions indicating change.

        2) Recommendations for alternative materials or methods.

3) Items required with substitution request, in accordance with the substitution request requirements of the Contract Documents.

5. Product Data: Submit manufacturer's product data for the protective compound to be applied to core-drilled surfaces and cut concrete surfaces.

6. Informational Submittal: Submit written indication designating the day and time that the construction associated with cutting and patching will be uncovered, to provide for observation. Do not begin cutting or patching operations until submittal is accepted by Engineer.

7. Comply with submittal requirements of individual Specification Sections for patching materials.

1.05 SITE CONDITIONS

A. Owner does not assume responsibility for the actual condition of structures and equipment to be demolished and removed.

B. Existing Site conditions shall be maintained to the greatest extent possible by the Owner to the time of Notice to Proceed.

C. Contractor shall perform investigations, explorations, and probes as necessary at the Site prior to initiating demolition Work to ascertain any required protective measures before proceeding with demolition and removal. Contractor shall give particular attention to shoring and bracing requirements to prevent damage to the Work and existing structures.

D. Contractor shall verify measurements, dimensions and other conditions of each existing structure, system, equipment and material indicated in the Contract Documents for new Work prior to ordering equipment and materials.

PART 2 – PRODUCTS

2.01 MATERIALS

A. General:

1. Provide materials and products in accordance with the individual Specification Sections and the Contract Documents.

2. Provide materials and products that visually match existing adjacent surfaces to fullest extent possible for exposed surfaces.

3. If not indicated in the Contract Documents, provide materials and products that are identical to existing materials and products affected by the Work.

4. If identical materials and products are unavailable, provide materials and products that shall equal or exceed performance requirements of existing materials and products.

B. Compound Applied to Core-Drilled Surfaces and Cut Concrete Surfaces:

1. Product and Manufacturer: Provide one of the following:

a. Sikagard 62, by Sika Corporation.

b. Or equal.

PART 3 – EXECUTION

3.01 CONSTRUCTION ELECTRONIC DOCUMENTATION

A. Pre-Construction Documentation

1. Contractor shall provide photographic and video documentation of the Site where Work is being performed. Engineer and Owner reserve the right to be present during documentation.

2. Contractor shall provide both photographic and video documentation at grade-level and aerial of the Site prior to commence Work.

3. Contractor shall submit pre-construction documentation to Engineer and Owner for review. Contractor, Engineer, and Owner shall visit Site to field verify electronic documentation prior to commencing the Work. Site visit verification shall establish existing conditions prior to commencing Work.

B. Construction Progress Documentation

1. Contractor shall document Work progress at locations and construction as directed by Engineer, at a minimum.

2. Contractor shall provide electronic documentation prior to and following any shutdown, switchover, demolition, de-commissioning, cutting, patching, repair, etc. Engineer and Owner reserve the right to be present during documentation.

3. Contractor shall document following exposure of buried utilities, piping, valve, appurtenance and other underground elements.

4. Engineer reserves the right to provide construction progress documentation to confirm Contractor electronic documentation.

5. Contractor shall provide photos with each Application for Payment.

6. Photographs shall be taken at locations that adequately illustrate the condition of construction and the state of progress.

C. Post-Construction Documentation

1. Contractor shall take photographic and video documentation of the Site where Work has been completed and prior to Substantial Completion or partial utilization by Owner. Engineer and Owner reserve the right to be present during documentation.

2. Contractor shall provide both photographic and video documentation at grade-level and aerial of the Site following completion of the Work.

D. Submittal Requirements:

1. Documentation shall be time stamped for verification, including date and time.

2. Documentation shall be organized in a logic manner, such as by structure, building, physical site location, etc. for easy of comparison.

3. Photographic documentation shall be high resolution electronic versions.

4. Documentation shall be submitted to Engineer for review and approval prior to commence Work and at completion of the Work.

3.02 DEMOLITION

A. General:

1. Demolition Work shall comply with the applicable provisions and recommendation of ANSI A10.2, Safety Code for Building Construction, all governing codes, and as specified in this Section.

2. Contractor shall furnish competent and experienced personnel for the various type of demolition and removal Work. Demolition and removal Work shall be performed with regard to the safety of Owner employees, individuals at the Site, and the public.

3. Contractor shall remove temporary work, such as enclosures, signs, guards, etc. when such temporary Work is no longer required or when directed at the completion of the Work.

4. Contractor shall perform patching, restoration and Work in accordance with individual Specification Sections and details shown on Contract drawings.

5. Contractor shall be responsible for damage caused by demolition Work to existing structures, equipment and materials indicated for reuse or to remain at no additional cost to Owner.

6. Contractor shall maintain a clean working environment during the demolition Work in accordance with Section 01740 – Cleaning and Waste Management.

B. Protection during Demolition:

1. Contractor shall provide, erect, and maintain catch platforms, lights, barriers, weather protection, warning signs and other items as required for proper protection of the public, occupants of the building, personnel engaged in demolition Work, and adjacent construction.

2. Contractor shall provide and maintain weather protection at exterior openings so as to fully protect the interior premises against damage from the elements until such openings are closed by the Work.

3. Contractor shall provide and maintain temporary protection of the existing structure designated to remain where demolition, removal and Work is being done, connections made, materials handled or equipment moved. Temporary protection shall be provided in accordance with Section 01530 – Protection of Work and Property.

4. Contractor shall take necessary precautions to prevent dust from rising by wetting demolished masonry, concrete, plaster and similar debris. Unaltered portions of the existing buildings affected by the operations in the Contract Documents shall be protected by dust proof partitions and other adequate means. Dust control shall be provided in accordance with Section 01560 – Temporary Controls.

5. Contractor shall provide adequate fire protection in accordance with Section 01510 – Temporary Utilities and authorities having jurisdiction.

6. Contractor shall perform the demolition Work with minimum traffic interference. Contractor shall not close or obstruct walkways, passageways, or stairways. Contractor shall not store or place materials in passageways, stairs or other means of egress.

7. Contractor shall minimize disturbances to exterior walls and roofs to small sections that are readily repaired and patched to maintain watertight conditions in existing structures and buildings.

C. Performance of Demolition:

1. Equipment, piping, valves and appurtenances:

a. Contractor shall drain equipment, piping, valves, and appurtenances prior to demolition Work. Contractor shall be responsible for collection, transport, and disposal of drained contents at no additional cost to the Owner.

b. Contractor shall provide line stops, plugs, blind flanges, etc. for equipment, piping, valves and appurtenance required to remain in service during the

Project. Contractor shall provide temporary or permanent supports in accordance with the Contract Documents.

c. Supports, pedestals and anchors shall be removed with the equipment and piping unless otherwise noted in the Contract Documents.

d. Concrete bases, anchor bolts and other supports shall be removed to approximately 1 inch below the surrounding finished area and the recesses shall be patched to match the adjacent areas.

e. Wall and roof openings shall be closed, and damaged surfaces shall be patched to match the adjacent areas, in accordance with the Contract Documents and as directed by the Engineer.

f. Wall sleeves, wall pipes, and wall castings shall be plugged or blanked off in accordance with the Contract Documents and as directed by the Engineer.

g. Openings in concrete shall be closed in accordance with the Contract Documents and as directed by the Engineer.

2. Electrical components and equipment:

a. Contractor shall de-energize panelboards, lighting fixtures, switches, circuit breakers, electrical conduits, motors, limit switches, pressure switches, instrumentation such as flow, level and/or other meters, wiring, and similar electrical equipment prior to removal.

b. Contractor shall relocate or isolate electrical equipment and materials that serve equipment, piping, valves and appurtenance that are to remain in service during the Project.

3. Reused and relocated equipment:

a. Contractor shall receive approval from Engineer prior to removal and relocation of equipment and material. Equipment and materials removed by Contractor prior to Engineer’s approval that is required for Owner’s operation of the facility shall be reinstalled at no cost to the Owner.

b. Prior to removal and relocation Work, equipment and materials indicated for reuse and relocation shall be operated by Owner with Contractor and Engineer present to witness existing functionality and operation.

c. Contractor shall provide personnel responsible for reinstallation of equipment and material for the removal Work.

d. Contractor shall be responsible and provide storage and protection of equipment and materials in accordance with Section 01660 – Product

Storage and Protection Requirements until relocation and reinstallation Work is performed.

e. Contractor shall provide replacement equipment and material that is damaged during the removal Work at no cost to the Owner. Contractor shall be responsible to provide same type, model, electrical components, etc. equipment and material as approved by Engineer and Owner.

4. Structural removal:

a. Contractor shall provide and install temporary shoring, struts, and bracing required for the demolition Work for structural materials.

b. Contractor shall cut and remove structural material at the interface of demolition Work and the existing structural element. Cutting and removal shall occur in small sections, including masonry units, to prevent instability of structural elements.

c. Contractor shall patch, repair, and refinish adjacent surfaces that remain following demolition Work.

1) Adjacent surfaces shall be repaired and refinished to the condition prior to the demolition Work and in accordance with the Contract Documents.

2) Adjacent surfaces shall be cleaned of dirt, grease, loose paint, etc., prior to refinishing.

d. Contractor shall limit cutting of existing roof areas designated to remain to the limits required for the proper installation of the Work.

1) Cut and remove insulation, joists, flashing, membranes, shingles, and metals, etc. in accordance with the Contract Documents and as directed by the Engineer for installation of the Work.

2) Provide temporary weather tight protection as required until new roofing and flashings are installed.

5. Architectural repairs and removal Work, not specifically shown on the Drawings, may include, but not limited to, the following:

a. Brickwork: Re-pointing; removing and replacing broken, cracked, disintegrating and missing materials.

b. Windows: Removing cracked or disintegrating sealant material; replacing missing or broken glass; re-caulking and sealing frames; glazing sealants.

c. Re-finishing: Removing rust, sealing or peeling paint from surfaces by scraping, sanding or wire brushing; priming and repainting surfaces.

d. Roofing: Patching and repairing membrane or built-up roofing; metal flashing repair; correcting roof pitch to eliminate ponding; cleaning and/or replacing roof drains.

e. Masonry: Cutting and installing new expansion and control joints.

f. Parapets: Removing and construction of new walls and copings; clean and patching of copings; replacing copings where broken.

g. Concrete surfaces: Patching, cleaning, sealing and resurfacing floors, walls, lintels, sills and trim. Replace lintels where broken. Patching or replacing broken, spalled, cracked and disintegrating concrete encased steel columns and piers.

h. Openings: Cutting and modifying as required for new Work. Provide new lintels, doors and frames.

i. Doors: Patching and refinishing doors and frames.

j. Ceilings: Patching, refinishing and replacing.

k. Guards, handrails and appurtenances: Cleaning and repainting steel materials. Replacing steel material with new aluminum material.

l. Demolished Exterior Openings: Remove window sash, frame, sill, stool and trim at exterior doors indicated for enclosure and sealing. Provide brick and/or masonry block for closure and sealing.

D. Maintenance during Demolition:

1. Contractor shall maintain the buildings, structures and public properties free from accumulations of waste, debris and rubbish, generated by the demolition Work.

2. Contractor shall provide cleaning and waste management of demolition equipment and materials in accordance with Section 01740 – Cleaning and Waste Management.

3.03 CUTTING AND CORING

A. General:

1. Contractor shall notify Engineer in writing and receiving Engineer’s approval prior to cutting load bearing walls (concrete or masonry) and structural concrete floors.

2. Perform cutting and coring to limit extent of patching required.

3. Structural Elements: Do not cut or core structural elements in manner that would change structural element's load-carrying capacity as load deflection ratio.

4. Operating Elements: Do not cut or core operating elements in manner that would reduce capacity to perform as intended. Do not cut or core operating elements or related components in manner that would increase maintenance requirements or decrease operational life or safety.

5. Replace, patch, and repair materials and surfaces cut or damaged during cutting and coring Work, Contractor shall use methods that do not void required or existing warranties.

6. Provide temporary or permanent bypass provisions prior to cutting existing pipe, conduit, ductwork, or other utilities serving facilities scheduled to be removed or relocated in accordance with the Contract Documents.

7. Inspection: Examine and prepare surfaces prior to commencing Work. Contractor shall report unsatisfactory or questionable conditions to Engineer in writing. Contractor shall not proceed with the Work until unsatisfactory conditions are corrected.

8. Preparation:

    a. Provide temporary support required to maintain structural integrity, to protect adjacent Work from damage, and to support the element(s) to be cut or cored.

    b. Protection of Existing Construction During Cutting and Coring:

        1) Protect existing structures, equipment, and materials during cutting and coring to prevent damage.

        2) Provide protection from adverse weather conditions that will be exposed during cutting and coring Work.

        3) Avoid interference with use of adjoining areas or interruption of free passage to adjoining areas.

9. Restoration:

    a. Clean equipment, materials, piping systems, valves, conduit and appurtenances that were damaged due to the Work prior to applying paint or other finishing materials.

    b. Restore damaged pipe coverings, including insulation, to original condition.

B. Cutting:

1. General:

a. Cut existing structures and appurtenances that provide surfaces for installation or repair of the Work. Cut existing construction using methods to minimize damage and disturbance to retained and adjoining construction elements.

b. Cutting equipment used shall be hand or small power tools suitable for sawing or grinding. Avoid using hammering or chopping equipment for cutting Work.

c. Cut holes and slots as small as possible and to size required for incorporation of the Work and in accordance with the Contract Documents.

d. Cut or drill from exposed or finished side to concealed side to avoid marring finished surfaces.

e. Provide adequate bracing of area to be cut prior to cutting.

f. Provide equipment and material to remove cut spoils.

g. Provide temporary protection for cut openings where and when Work is not being performed.

2. Concrete and Masonry:

a. Cut through concrete and masonry using concrete wall saw with diamond saw blades.

b. Provide control for slurry generated during sawing on both sides of element being cut.

c. After cutting concrete and before installing new Work on or through the opening, coat exposed concrete and steel with protective coating material specified in this Section. Apply protective coating in accordance with manufacturer's instructions.

C. Coring:

1. Core-drill holes through concrete and masonry walls, slabs, or arches, in accordance with the Contract Documents, unless written authorization is furnished by Engineer.

2. Protection: Protect existing structures, equipment, materials, utilities, and adjacent areas from water and other damage by core-drilling Work.

3. Coring:

a. Perform coring with non-impact rotary tool using diamond core-drills.

b. Size holes for pipe, conduit, sleeves, equipment or mechanical seals, as required, to be installed through the penetration and in accordance with the Contract Documents.

c. After core-drilling and before installing equipment and material through the penetration, coat exposed concrete and steel with protective coating material specified in this Section. Apply protective coating in accordance with manufacturer's instructions.

4. Cleaning: Vacuum or otherwise remove slurry and tailings from the work area following core-drilling.

3.04 PATCHING

A. General:

1. Construction shall be patched by filling, repairing, refinishing, closing-up, and similar methods at completion of the Work.

2. Provide equipment and materials in accordance with the Contract Documents for patching Work. Comply with manufacturer's installation instructions.

3. Provide airtight connections to pipes, sleeves, ducts, conduit, and other penetrations through surfaces when patching the Work. Provide durable patching seams that minimize visual appearance.

4. Patched areas shall be tested to demonstrate integrity of installation as directed by the Engineer. Contractor shall provide testing equipment, material and services for patch testing.

B. Restoration:

1. Restore exposed finishes of patched areas to minimize evidence of patching and refinishing.

2. Contractor shall extend refinishing and restoration into adjoining areas to blend patched areas with existing adjacent areas.

a. Refinish to nearest intersection for continuous surfaces.

b. Refinish the entire assembly and system for equipment and materials.

c. Repair and rehang existing ceilings to provide an even-plane surface of uniform appearance.

d. Apply plaster and finishes to match adjacent interior walls and partition areas for openings sealed with brick and/or masonry block.

3.05 INSTALLATION

A. Install equipment and materials in accordance with the Contract Documents, approved Shop Drawings, and manufacturer's installation instructions. When manufacturer's installation instructions conflict with the Contract Documents, obtain interpretation or clarification from Engineer before proceeding.

B. Preparation of surfaces shall be performed prior to installation of equipment and material.

1. New floor finishes: Repair and patch with concrete, asphalt latex type emulsion and underlayment as required for existing surfaces or new flooring surface.

2. Ceramic tile flooring or bases installed over concrete floors: Grind away cove, if present, for installation of new Work.

C. Concrete surfaces shall achieve compression strength in accordance with the Contract Documents prior to installation of equipment and materials.

1. Anchor bolts and templates shall be provided by Contractor and as specified in the individual Specification Sections.

2. Concrete foundations shall be treated with sealer to prevent oil from seeping into concrete as specified in the individual Specification Sections.

D. Maintain the work area in a broom-clean condition while installing materials and equipment.

E. Contractor shall be responsible for equipment for hoisting, lifting, moving, rigging, etc. for installation of equipment and materials.

1. Contractor shall be responsible for design of temporary installation system used for the installation Work, unless otherwise indicated in the Contract Documents.

2. Contractor shall be responsible for damage to existing structure, equipment, and material caused prior, during, and following installation of the Work with the Contractor furnished temporary installation system at no cost to Owner. Repairs shall be in accordance with the Contract Documents, shall return to condition prior to installation Work, and as directed by the Engineer.

3. Owner's hoists, monorails, bridge cranes, rigging, etc. shall not be used by the Contractor unless written authorization is provided by Owner.

F. Alteration or repair of new equipment and materials shall not be permitted without written authorization from Engineer.

G. Field welding or burning of new equipment and materials shall not be permitted unless indicated in the Contract Documents or without written authorization from Engineer.

H. Contractors shall install temporary shoring and bracing where necessary during installation of the Work where required:

1. System shall be provided in accordance with the Contract Documents and code requirements.

2. Temporary system shall consist of adjustable sound timbers or rolled shapes easily removable following installation of the Work.

3. Contractor shall be responsible for damage to existing structures and new Work during installation, utilization, and removal of the temporary system at new additional cost to the Owner.

I. Manufacturer's Installation Services: Provide competent, qualified manufacturer's representatives of equipment and material for services specified in the individual Specification Sections, including, but not limited to:

1. Supervising installation

2. Checking the completed installation

3. Adjusting and testing of equipment and materials

4. Instructing Owner's operations and maintenance

[END OF SECTION]

SECTION 01050

FIELD ENGINEERING

PART 1 – GENERAL

1.01 SUMMARY

A. Contractor shall provide field engineering and professional services of the types indicated for the Project, including:

1. Furnishing civil, structural, and other professional engineering services specified or required to execute Contractor's construction methods.

2. Developing and making all detail surveys and measurements required for construction.

3. Keeping a transit, theodolite, or total station (theodolite with electronic distance measurement device); leveling instrument; and related implements such as survey rods and other measurement devices, at the Site at all times, and having a skilled instrument person available when necessary for laying out the Work.

4. Being solely responsible for all locations, dimensions and levels. No data other than Change Order or Field Order shall justify departure from dimensions and levels required by the Contract Documents.

5. Rectifying all Work improperly installed because of not maintaining, not protecting, or removing without authorization established reference points, stakes, marks, and monuments.

6. Providing such facilities and assistance necessary for Engineer to check lines and grade points placed by Contractor.

B. Related Sections:

1. Section 01782 – Project Record Documents.

1.02 ADMINSTRATIVE REQUIREMENTS

A. Departures from Contract Drawings:

1. Contract Drawings show the extent and arrangement of the Work.

2. Contractor shall notify Engineer of departures from the Drawings that the Contractor deems required for incorporation of the Work at the Site.

3. Contractor shall provide field engineering services for equipment and materials that require modifications to existing structures, auxiliary equipment, piping,

electrical controls that are not indicated for modifications in the Contract Documents.

1.03 SERVICES AND RESPONSIBILITIES

A. Contractor's Field Engineer:

1. Contractor shall employ and retain field engineer at the Site capable of performing field engineering tasks required, including:

a. Provide reports to Engineer on the Work.

b. Check formwork, reinforcing, inserts, structural steel, bolts, sleeves, piping and other equipment and materials for conformance with Contract Documents.

c. Maintain field office files and drawings, record documents, and coordination with Subcontractors.

d. Prepare layout and coordination drawings for construction operations.

e. Check and coordinate Work for conflicts, interferences, and discrepancies with notification to Engineer.

f. Cooperate with Engineer and Owner in observing the Work and field inspections.

g. Review and coordinate the Work with Shop Drawings and other submittals.

B. Contractor's Surveyor:

1. Contractor shall employ or retain the services of a licensed surveyor registered in the State of Florida with experience and capability of performing surveying and layout tasks required in the Contract Documents and as required for the Work. Surveyor's tasks include, but are not necessarily limited to, the following:

a. Providing required surveying equipment, including transit or theodolite, level, stakes, and surveying accessories.

b. Establishing required lines for constructing all facilities, structures, pipelines, and site improvements.

c. Preparing and maintaining professional-quality, accurate, well organized, legible notes of all measurements and calculations made while surveying and laying out the Work.

d. Complying with requirements of the Contract Documents relative to surveying and related work.

1.04 SUBMITTALS

A. Action/Informational Submittals:

1. Surveying:

a. Plan for conducting survey Work, submitted ten days prior to beginning of survey Work.

b. Field books after completing survey Work.

c. Certified survey in accordance with this Section.

2. Certificates: Signed Contractor or Contractor's surveyor certifying elevations and locations of Work are in conformance with Contract Documents, with explanations of deviations.

3. Qualification Statements: Contractor's surveyor.

PART 2 – PRODUCTS (NOT USED)

PART 3 – EXECUTION

3.01 SURVEYING

A. Contractor shall establish baselines for location of equipment, materials and structures of the Work with bench marks and batter boards adjacent to Work.

B. Contractor shall provide detailed surveys necessary for the Work including, but not limited to, slope stakes, batter boards, working points, lines and elevations.

C. Specific surveying:

1. Contractor shall have weirs surveyed by professional, licensed surveyor.

2. Contractor shall adjust weirs within a tolerance of +/- 0.05-inches of elevations shown on the Contract Documents.

3. Surveyed points for weirs shall be no greater than 10-feet spacing, and no less than two points per section of weir plate.

3.02 CLOSEOUT ACTIVITES

A. Contractor shall provide Project record documents for field engineering and surveying in accordance with Section 01782 – Project Record Documents.

B. Contractor shall provide certified weir elevation survey report in accordance with the requirements specified in this Section.

3.03 PROTECTION

A. Contractor shall preserve and protect benchmarks, reference points and stakes. Contractor shall re-establish damaged, destroyed, or lost bench marks, reference points and stakes. Contractor shall remove and re-install equipment and material installed based on Contractor established bench marks, reference points and stakes that have been damaged, destroyed, or lost at no additional cost to Owner.

B. Contractor shall preserve and protect existing and new control points, property markers and monuments during construction of the Work. Contractor shall establish and replace damaged or lost control points, property markers and monuments due to Contractor's construction activities at no cost to the Owner. Contractor shall provide computations and calculations to establish location of replacement Work.

[END OF SECTION]

SECTION 01090

REFERENCES

PART 1 – GENERAL

1.01 SUMMARY

A. Definitions and terminology applicable to all the Contract Documents are included in the General Conditions.

1.02 REFERENCES

A. Abbreviations and Acronyms: Common abbreviations that may be found in the Contract Documents are listed below:

alternating current	a-c
ampere	A
Architectural Barriers Act	ABA
Americans with Disabilities Act	ADA
Americans with Disabilities Act Accessibility Guidelines	ADAAG
ante meridian	a.m.
average	avg
biochemical oxygen demand	BOD
brake horsepower	bhp
British thermal unit	Btu
Centigrade (or Celsius)	C
chlorinated polyvinyl chloride	CPVC
Code of Federal Regulations	CFR
cubic inch	cu in
cubic foot	cu ft
cubic yard	cdu yd, or CY
cubic feet per minute	cfm
cubic feet per second	cfs
degree Centigrade (or Celsius)	degrees C or °C

degrees Fahrenheit	degrees F or ºF
dry film thickness	dft
diameter	dia
direct current	d-c
dollars	$
each	ea
efficiency	eff
Fahrenheit	F
feet	ft
feet per hour	fph
feet per minute	fpm
feet per second	fps
figure	Fig
flange	flg
foot-pound	ft-lb
gallon	gal
gallons per hour	gph
gallons per minute	gpm
gallons per second	gps
gram	g
grams per liter	g/L
Hertz	Hz
horsepower	hp or HP
hour	hr
human-machine interface	HMI
inch	in.
inches water gage	in. w.g.
inch-pound	in.-lb
inside diameter	ID

iron pipe size	IPS
thousand pounds	kips
thousand pounds per square inch	ksi
kilovolt-ampere	kva
kilowatt	kw
linear foot	lin ft or LF
liter	L
maximum	max
mercury	Hg
milligram	mg
milligrams per liter	mg/l or mg/L
milliliter	ml
millimeter	mm
million gallons per day	mgd or MGD
million gallons	MG
minimum	min
national pipe threads	NPT
net positive suction head	NPSH
net positive suction head available	NPSHA
net positive suction head required	NPSHR
nominal pipe size	NPS
number	no.
operator interface terminal	OIT
ounce	oz
ounce-force	ozf
outside diameter	OD
parts per hundred	pph
parts per million	ppm
parts per billion	ppb

polyvinyl chloride	PVC
post meridian	p.m.
pound	lb
pounds per square inch	psi
pounds per square inch absolute	psia
pounds per square inch gauge	psig
pounds per square foot	psf
process control system	PCS
programmable logic controller	PLC
revolutions per minute	rpm
second	sec
specific gravity	sp gr or SG
square	sq
square foot	sq ft or sf
square inch	sq in.
square yard	sq yd or SY
standard	std
standard cubic feet per minute	scfm
total dynamic head	TDH

B. Definitions: Terminology used in the Specifications includes:

1. “Indicated” refers to graphic representations, notes, or schedules on the Drawings, or to other paragraphs or schedules in the Specifications and similar locations in the Contract Documents.

2. “Shown”, “noted”, “scheduled”, and “specified” are used to help the user locate the reference without limitation on the location.

3. “Installer”, “applicator”, or “erector” is Contractor or another entity engaged by Contractor, either as an employee or subcontractor, to perform a particular construction activity, including installation, erection, application or similar Work. Installers shall be experienced in the Work that installer is engaged to perform.

4. “Experienced”, when used with the term “installer” means having successfully completed a minimum of five previous projects similar in size and scope to this

Project; being familiar with the special requirements indicated; being familiar with Laws and Regulations; and having complied with requirements of authorities having jurisdiction, and complying with requirements of the Supplier of the material or equipment being installed.

5. Trades: Use of a term such as “carpentry” does not imply that certain construction activities must be performed by accredited or unionized individuals of a corresponding generic name, such as “carpenter”, unless otherwise indicated in the Contract Documents or required by Laws or Regulations. Such terminology also does not imply that specified requirements apply exclusively to trade personnel of the corresponding generic name.

6. “Assigned specialists” and similar terms: Certain Sections of the Specifications require that specific construction activities be performed by specialists recognized as experts in those operations. Engage said specialists for those activities, and their engagement is a requirement over which Contractor has no option. These requirements do not conflict with enforcement of building codes and other Laws and Regulations. Also, such requirements are not intended to interfere with local trade union jurisdictional settlements and similar conventions. Such assignments shall not relieve Contractor of responsibility for complying with the requirements of the Contract Documents.

C. Reference Standards:

1. Refer to General Conditions relative to reference standards and resolving discrepancies between reference standards and the Contract Documents. Provisions of reference standards are in effect in accordance with the Specifications.

2. Copies of Standards: Each entity engaged in the Work shall be familiar with reference standards applicable to its construction activity. Copies of applicable reference standards are not bound with the Contract Documents. Where reference standards are needed for a construction activity, obtain copies of standards from the publication source.

3. Abbreviations and Names: Where reference standards, specifications, codes, manuals, Laws or Regulations, or other published data of international, national, regional or local organizations are referred to in the Contract Documents, the organization issuing the standard may be referred to by their acronym or abbreviation only.

4. Following acronyms or abbreviations that may appear in the Contract Documents shall have the meanings indicated below. Listing is alphabetical by acronym.

AA	Aluminum Association
AABC	Associated Air Balance Council

AAMA	American Architectural Manufacturers Association
AASHTO	American Association of State Highway and Transportation Officials
ACI	American Concrete Institute
ACIFS	American Cast Iron Flange Standards
ACS	American Chemical Society
ADC	Air Diffusion Council
ADSC	International Association of Foundation Drilling.
AEIC	Association of Edison Illuminating Companies
AF&PA	American Forest and Paper Association
ABMA	American Bearing Manufacturers Association (formerly Anti- Friction Bearing Manufacturers Association (AFBMA))
AGA	American Gas Association
AGMA	American Gear Manufacturers Association
AHDGA	American Hot Dip Galvanizers Association
AI	Asphalt Institute
AIA	American Institute of Architects
AIChE	American Institute of Chemical Engineers
AISC	American Institute of Steel Construction
AISI	American Iron and Steel Institute
AITC	American Institute of Timber Construction
ALSC	American Lumber Standards Committee
AMA	Acoustical Materials Association
AMCA	Air Movement and Control Association
AMP	National Association of Architectural Metal Manufacturers, Architectural Metal Products Division
ANSI	American National Standards Institute
APA	The Engineered Wood Association
API	American Petroleum Institute
APHA	American Public Health Association
AREA	American Railway Engineering Association
ARI	Air Conditioning and Refrigeration Institute

ASA	American Standards Association
ASAE	American Society of Agricultural Engineers
ASCE	American Society of Civil Engineers
ASHRAE	American Society of Heating, Refrigerating and Air Conditioning Engineers
ASME	American Society of Mechanical Engineers
ASNT	American Society for Non-Destructive Testing
ASPA	American Sod Producers Association
ASQ	American Society for Quality
ASSE	American Society of Safety Engineers
ASTM	American Society for Testing and Materials
AWCI	Association of the Wall and Ceiling Industry
AWI	Architectural Woodwork Institute
AWPA	American Wood Protection Association
AWPI	American Wood Preservers Institute
AWS	American Welding Society
AWWA	American Water Works Association
BAAQMD	Bay Area Air Quality Management District
BHMA	Builders Hardware Manufacturers Association
BIA	Brick Industry Association
BOCA	Building Officials and Code Administrators
CBMA	Certified Ballast Manufacturers Association
CDA	Copper Development Association
CEMA	Conveyor Equipment Manufacturers Association
CGA	Compressed Gas Association
CISCA	Ceilings and Interior Systems Construction Association
CISPI	Cast Iron Soil Pipe Institute
CLFMI	Chain Link Fence Manufacturers Institute
CMAA	Crane Manufacturers Association of America
CPSC	Consumer Product Safety Commission

CRSI	Concrete Reinforcing Steel Institute
CSI	Construction Specifications Institute
DIN	Deutsches Institut fur Normung eV (German Institute for Standardization)
DIPRA	Ductile Iron Pipe Research Association
EJCDC	Engineers Joint Contract Documents Committee
EJMA	Expansion Joint Manufacturers Association, Inc.
ETL	Intertek Testing Services, Inc. (formerly ETL Testing Laboratories, Inc.)
FBC	Florida Building Code
FCC	Federal Communications Commission
FDEP	Florida Department of Environmental Protection
FDOT	Florida Department of Transportation
FEMA	Federal Emergency Management Agency
FHWA	Federal Highway Administration
FM	Factory Mutual (FM Global)
FRPI	Fiberglass Reinforced Plastics Institute
FS	Federal Specification
GA	Gypsum Association
GANA	Glass Association of North America
HEW	United States Department of Health, Education and Welfare
HI	Hydraulic Institute
HMI	Hoist Manufacturers Institute
HUD	United States Department of Housing and Urban Development
IBC	International Building Code
ICC	International Code Council
ICEA	Insulated Cable Engineers Association
IEEE	Institute of Electrical and Electronics Engineers
IESNA	Illuminating Engineering Society of North America
IFI	Industrial Fasteners Institute

IFCEA	Insulated Power Cable Engineers Association
IRI	Industrial Risk Insurers
ISA	Instrumentation, Systems, and Automation Society (formerly Instrument Society of America)
ISO	Insurance Services Office
IOS	International Organization for Standardization
LPI	Lightning Protection Institute
MIA	Marble Institute of America
ML/SFA	Metal Lath/Steel Framing Association
MS/MIL	Military Specifications
MSS	Manufacturers' Standardization Society
MMA	Monorail Manufacturers Association
NAAMM	National Association of Architectural Metal Manufacturers
NACE	National Association of Corrosion Engineers
NAPF	National Association of Pipe Fabricators, Inc.
NARUC	National Association of Regulatory Utilities Commissioners
NBHA	National Builders Hardware Association
NBS	United States Department of Commerce, National Bureau of Standards
NCMA	National Concrete Masonry Association
NEC	National Electric Code
NELMA	Northeastern Lumber Manufacturers' Association
NEMA	National Electrical Manufacturers Association
NESC	National Electrical Safety Code
NETA	International Electrical Testing Association
NFPA	National Fire Protection Association
NFRC	National Fenestration Rating Council
NGA	National Glass Association
NHLA	National Hardwood Lumber Association
NHPMA	Northern Hardwood and Pine Manufacturers Association
NIST	United States Department of Commerce, National Institute of Standards and Technology

NLGA	National Lumber Grades Authority
NRCA	National Roofing Contractors Association
NRMCA	National Ready Mixed Concrete Association
NSF	National Sanitation Foundation
NSSGA	National Stone, Sand, and Gravel Association
NTMA	National Terrazzo and Mosaic Association
OSHA	Occupational Safety and Health Administration
PCA	Portland Cement Association
PCI	Precast/Prestressed Concrete Institute
PEI	Porcelain Enamel Institute
PFI	Pipe Fabrication Institute
PPI	Plastics Pipe Institute
PGMC	Primary Glass Manufacturers Council
PS	Product Standards Section, United States Department of Commerce
RCSC	Research Council on Structural Connections (part of AISC)
RMA	Rubber Manufacturers Association
SAE	Society of Automotive Engineers
SBCCI	Southern Building Code Congress International, Inc.
SCAQMD	Southern California Air Quality Management District
SCPRF	Structural Clay Products Research Foundation
SCTE	Society of Cable Telecommunications Engineers
SDI	Steel Deck Institute
SDI	Steel Door Institute
SIGMA	Sealed Insulating Glass Manufacturing Association
SJI	Steel Joist Institute
SMACNA	Sheet Metal and Air Conditioning Contractor’s National Association
SPI	Society of the Plastics Industry
SPIB	Southern Pine Inspection Bureau
SSPC	Society for Protective Coatings

SWFWMD	Southwest Florida Water Management District
SWI	Steel Window Institute
TCNA	Tile Council of North America
TEMA	Tubular Exchanger Manufacturers Association
TIA/EIA	Telecommunications Industry Association/Electronic Industries Alliance
UBC	Uniform Building Code
UL	Underwriters Laboratories, Inc.
USAB	United States Access Board
USDOE	United States Department of Energy
USEPA	United States Environmental Protection Agency
USGBC	United States Green Building Council
USGS	United States Geological Survey
USPHS	United States Public Health Service
WCLIB	West Coast Lumber Inspection Bureau
WCMA	Window Covering Manufacturers Association
WCMA	Wood Component Manufacturers Association
MDMA	Window and Door Manufacturers Association
WWEMA	Water and Wastewater Equipment Manufacturers Association
WWPA	Western Wood Products Association

PART 2 – PRODUCTS (NOT USED)

PART 3 – EXECUTION (NOT USED)

[END OF SECTION]

SECTION 01200

PROJECT MEETINGS

PART 1 – GENERAL

1.01 SUMMARY

A. Section Includes:

1. Pre-Construction Meeting:

a. Purpose of conference is to designate responsible personnel, establish working relationships, discuss preliminary schedules submitted by Contractor, and review administrative and procedural requirements for the Project. Matters requiring coordination will be discussed and procedures for handling such matters will be established.

b. Date, Time and Location: Conference will be held after execution of the Contract and before Work starts at the Site. Owner will establish the date, time, and location of conference and notify the interested and involved parties. Pre-construction meeting shall be held within the 20-day period after the effective date of the agreement and no later than 10 days prior to on-site activities.

2. Progress Meetings:

a. Progress meetings will be held throughout the Project. Contractor shall attend each progress meeting prepared to discuss in detail all items on the agenda.

b. Engineer will preside at progress meetings and will prepare and distribute minutes of progress meetings to all meeting participants and others as requested.

c. Date, Time, and Location:

1) Regular periodic meetings on a day and time agreeable to Owner, Engineer, and Contractor.

2) Contractor's Field Office at the Site or other location mutually agreed upon by Owner, Contractor, and Engineer.

d. Additional meetings may be conducted as progress of Work requires at a mutually agreed date, time and location.

1.02 ADMINSTRATIVE REQUIREMENTS

A. Pre-Construction Meeting:

1. Contractor shall provide pre-construction meeting submittals with sufficient number of copies for each attendee:

2. Required Attendees:

a. Contractor

1) Project manager.

2) Site superintendent.

3) Safety representative.

4) Major Subcontractors.

b. Owner.

c. Engineer.

d. Resident Project Representative (RPR).

e. Representatives of governmental or other regulatory agencies.

3. Contractor shall prepare and submit a health and safety plan, as specified in this Section prior to the pre-construction meeting.

4. Agenda, minimum:

a. Procedural requirements:

1) Designation of responsible personnel

2) Use of Site and Owner's requirements, including general regards for community relations

3) Delivery of materials and equipment to the Site

4) Safety and first aid procedures

5) Confined space entry plan

6) Security procedures

7) Housekeeping procedures

b. Administrative requirements:

1) Distribution of Contract Documents.

2) Shop Drawing submittal procedures.

3) Maintaining record documents at the Site.

4) Contract modification procedures

5) Processing of Payment Application

c. Site mobilization requirements:

1) Working hours, overtime, and holidays.

2) Field offices, trailers, and staging areas.

3) Temporary facilities and utilities, including usage and coordination.

4) Temporary controls, such as sediment and erosion control, noise, dust, storm water, and other measures.

5) Access to Site, access roads, and parking for construction vehicles.

6) Protection of traffic and existing property, including site barriers and temporary fencing.

7) Security

8) Storage of materials and equipment.

9) Reference points and benchmarks, surveys and layouts.

10) Site maintenance during the project, including cleaning and removal of trash and debris.

11) Site restoration.

d. Schedules

1) Preliminary construction schedule

2) Critical work sequencing

3) Preliminary Shop Drawing submittal schedule

4) Preliminary Schedule of Values

B. Progress Meetings:

1. Progress meetings frequency shall be conducted as specified in this Section, unless modified and agreed upon by Owner, Contractor, and Engineer. Additional meetings may be conducted as progress of Work requires.

2. Contractor shall provide submittals specified in this Section prior to each progress meeting.

3. Attendance:

    a. Contractor, including project manager, site superintendent, safety representative, and representatives of Subcontractors and Suppliers as required.

    b. Engineer, including project manager (or designated representative), Resident Project Representative (if any), others as required by Engineer.

    c. Owner.

    d. Subcontractors, only with Engineer's approval or request, as required in the agenda.

4. Agenda, minimum:

    a. Review, comment, and amendment (if required) of minutes of previous progress meeting.

    b. Review of progress since the previous progress meeting.

    c. Planned progress through next 30 – 60 days.

    d. Review of Progress Schedule

        1) Contract Times, including Milestones (if any)

        2) Critical path.

        3) Schedules for fabrication and delivery of materials and equipment.

        4) Corrective measures, if required.

    e. Submittals:

        1) Review of status of critical submittals.

        2) Review revisions to schedule of submittals.

    f. Contract Modifications:

        1) Requests for interpretation

2) Clarification notices

3) Field Orders

4) Proposal requests

5) Change Proposals

6) Change Orders.

7) Claims.

g. Applications for progress payments.

h. Problems, conflicts, and observations.

i. Quality standards, testing, and inspections.

j. Coordination between parties.

k. Site management issues, including access, security, maintenance and protection of traffic, maintenance, cleaning, and other Site issues.

l. Safety.

m. Permits.

n. Record documents status.

o. Punch list status, as applicable.

p. Other business.

1.03 SUBMITTALS

A. Pre-Construction Meeting Submittals:

1. Prior to the conference, submit the following preliminary schedules in accordance with the General Conditions:

1) Progress schedule

2) Schedule of submittals

3) Schedule of values

2. Contractor's safety and first aid procedures.

3. Confined space entry plan (where applicable).

4. List of emergency contact information

B. Progress Meeting Submittals:

1. List of Work accomplished since the previous progress meeting.

2. Up-to-date Progress Schedule.

3. Up-to-date Schedule of Submittals.

4. Detailed “look-ahead” schedule of Work planned through the next progress meeting, with specific starting and ending dates for each activity, including shutdowns, deliveries of important materials and equipment, Milestones (if any), and important activities affecting the Owner, Project, and Site.

5. When applicable, list of upcoming, planned time off (with dates) for personnel with significant roles on the Project, and the designated contact person in their absence.

1.04 EMERGENCY CONTACT INFORMATION

A. Contractor shall provide list of emergency contact information for 24-hour use throughout the Project. Emergency contact information shall be updated and kept current throughout the Project. If personnel or contact information change, provide updated emergency contact information list at the next progress meeting.

B. Contractor’s list of emergency contact information shall include:

1. Contractor’s project manager’s office, field office, cellular, and home telephone numbers.

2. Contractor’s Site superintendent’s office, field office, cellular, and home telephone numbers.

3. Contractor’s foreman’s field office, cellular (if available), and home telephone numbers.

4. Major Subcontractors’ and Suppliers’ office, cellular, and home telephone numbers of project manager and foreman (when applicable).

C. Additional Emergency Contact Information:

1. Owner’s Project Manager: office, cellular, and home telephone numbers.

2. Owner’s central 24-hour emergency telephone number.

3. Engineer’s office, cellular, and home telephone numbers.

4. Resident Project Representative's office, field office, cellular, and home telephone numbers.

5. Emergency telephone numbers, including: "Emergency: Dial 911", and seven-digit telephone numbers for the hospital, ambulance, police, and fire department nearest to the Site. Provide names of each of these institutions.

6. Other involved entities as applicable.

PART 2 – PRODUCTS (NOT USED)

PART 3 – EXECUTION (NOT USED)

[END OF SECTION]

SECTION 01310

CONSTRUCTION PROGRESS SCHEDULE

PART 1 – GENERAL

1.01 SUMMARY

A. Contractor shall prepare and submit Progress Schedules and related documents in accordance with the General Conditions, as may be modified by the Supplementary Conditions, and this Section, unless otherwise accepted by Engineer.

1. Maintain and update Progress Schedules and related documents.

2. Progress Schedule shall be a Critical Path Method (CPM) Progress Schedule.

B. Engineer's acceptance of the Progress Schedule or related documents, and comments or opinions concerning activities in the Progress Schedule and related documents shall not control independent judgment of Contractor concerning means, methods, techniques, sequences and procedures of construction, unless the associated means, method, technique, sequence, or procedure is directed by the Contract Documents. Contractor is solely responsible for complying with the Contract Times.

1.02 REFERENCES

A. Definitions:

1. Activity: An element of the construction work that has the following specific characteristics: consumes time, consumes resources, has a definable start and finish, is assignable, and is measurable.

2. Constraint: An imposed date on the Progress Schedule or an imposed tie between Activities. The Contract Times are Constraints.

3. CPM Progress Schedule: Computerized Progress Schedule in Critical Path Method (CPM) format which accounts for the entire Work, defines the interrelationships between elements of the Work, reflects the uncompleted Work, and indicates the sequence with which the Work has been completed, indicates the sequence in which uncompleted Work will be completed, and indicates the duration of each Activity.

4. Critical Path: The continuous chain of Activities with the longest duration for completion within the Contract Times.

5. Early Start: The earliest possible date an Activity can start according to the assigned relationships among Activities.

6. Early Finish: The earliest date an Activity can finish according to the assigned relationships among the Activities.

7. Late Finish: The latest date an Activity can finish without extending the Contract Times.

8. Late Start: The latest date an Activity can start without extending the Contract Times.

9. Float: The time difference between the calculated duration of the Activity chain and the Critical Path.

10. Total Float: The total number of days that an Activity (or chain of Activities) can be delayed without affecting the Contract Times.

11. Network Diagram: A time-scaled logic diagram depicting the durations and relationships of the Activities.

12. Work Areas, Area, or System: A logical breakdown of the Project elements or a group of Activities which, when collectively assembled, are readily identifiable on the Project (for example, yard piping, a structure or building, a treatment process, or other logical grouping).

1.03 ADMINSTRATIVE REQUIREMENTS

A. Initial Progress Schedule:

1. Type and Organization of Progress Schedules:

a. Prepare one Progress Schedule covering the entire Project using scheduling software that is acceptable to Engineer.

b. Sheet Size: 11” by 17”, unless otherwise accepted by Engineer.

c. Time Scale: Indicate first date of each work week.

d. Activity Designations: Indicate title and related Specification Section number.

e. Organization:

1) Indicate on the separate Schedule of Submittals dates for submitting and reviewing Shop Drawings, Samples, and other submittals.

2) Group deliveries of materials and equipment into a separate sub-schedule that is part of the Progress Schedule.

3) Group construction into Work Area sub-schedules (that are part of the Progress Schedule) by Activity.

4) Clearly indicate the Critical Path on the Progress Schedule.

5) Organize each Work Area sub-schedule by Specification Section number.

2. Preliminary Progress Schedule:

a. Contractor shall submit to Engineer the preliminary Progress Schedule with associated Network Diagrams within 10 days after the Contract Times commence running on the effective date of the Agreement, or as otherwise required by the Contract Documents.

b. Engineer will review schedules and return review copy within 10 days after receipt.

c. If required, resubmit within seven days after return of review copy.

d. Submit three copies of preliminary Progress Schedule and associated reports and schedule-related documents to accompany the preliminary Progress Schedule, in accordance with the Submittals Article of this Section.

3. Initial Acceptance of Progress Schedule:

a. At least 10 days before submission of the first Application for Payment, Contractor shall schedule a conference at the Site for review of the preliminary Progress Schedule.

1) Attendees shall include Contractor, Engineer, Owner, and others as required.

2) Contractor shall have an additional 10 days to make corrections and adjustments and to complete and resubmit the Progress Schedule and associated Network Diagram.

3) Owner reserves the right to not make progress payment to Contractor until acceptable Progress Schedule, Network Diagram, and other reports and schedule-related documents required are submitted to Engineer.

b. Submit three copies each of acceptable Progress Schedule with Network Diagram, reports, and other schedule-related documents required to accompany the initial acceptable Progress Schedule, in accordance with the Submittals Article of this Section.

c. Initially-accepted Progress Schedule shall be identified as the baseline Progress Schedule.

B. Progress Schedule Updates:

1. Update the Progress Schedule each month. If during progress of the Work events develop that necessitate changes in the initially accepted Progress Schedule (i.e., baseline Progress Schedule), identify updated Progress Schedules sequentially as Progress Schedule Revision 1, 2, 3, and continuing in sequence as required.

2. The update to the Progress Schedule shall be based on retained logic. Progress override logic is not allowed.

3. Required scheduling software, and schedule organization, format, and content for updated Progress Schedules are identical to that required in this Section for initial Progress Schedules.

4. Submit to Engineer three hard copies of the updated Progress Schedule, Network Diagram, narrative report, and other schedule-related reports and documents required.

5. Submit updated Network Diagrams when revisions are proposed to the logic. Indicate in the narrative report delays that have occurred since the previous updated Progress Schedule. Engineer will not recommend payment by Owner of progress payments until updated Progress Schedule is received, reviewed, and accepted by Engineer. Payment for out-of-sequence Work is not allowed.

C. Distribution:

1. Distribute copies of the reviewed schedules to:

a. Job site file.

b. Subcontractors.

c. Other concerned parties.

1.04 NETWORK DIAGRAMS (PERT CHARTS)

A. General:

1. Contractor shall prepare and submit Network Diagrams, as generated using the scheduling software on paper of the size indicated for Progress Schedules in this Section.

2. Group Network Diagrams by Area and show the order and interdependence of Activities and sequence and quantities in which the Work will be accomplished.

3. Do not use match lines on Network Diagrams. Depict interrelationships to or from Activities outside the Area shown using an Activity symbol with Activity number and description.

4. In preparing Network Diagrams, comply with the basic concept of precedence diagramming method (PDM) network scheduling to show how start of a given

Activity depends on completion of preceding Activities, and how the Activity's completion may affect the start of subsequent Activities.

5. Level of schedule detail shall define the day-to-day Activities of the Work.

B. Content:

1. Clearly indicate the Critical Path and distinguish the Critical Path from other paths on the network.

2. Organize Network Diagrams by grouping into major Work Areas, including one for procurement of materials and equipment, and by specific Activity within each Area.

3. Logic diagrams shall include the following:

a. Activity number.

b. Activity description.

c. Activity duration (in work days).

d. Critical Path denoted.

e. Float for each Activity.

f. Activity or System designation.

g. Coded Area designation.

h. Responsibility code (e.g., each prime contractor and their respective Subcontractors, trade, operation, Suppliers, or other entity responsible for accomplishing an Activity).

i. Shift number (if more than one shift per day is to be employed).

C. Revisions:

1. When conditions develop that require revisions to logic or durations of the Network Diagram associated with the initially accepted Progress Schedule (i.e., baseline Progress Schedule), identify updates to the Network Diagram in the same manner required in this Section for Progress Schedule updates.

2. Revision of the logic or durations from the baseline Progress Schedule initially accepted by Engineer shall be submitted to Engineer for acceptance.

3. Incorporate into the Progress Schedule revisions to logic or duration accepted by Engineer and include in monthly narrative report both a description of revisions and listing of Activities affected by revisions.

4. Changes resulting from Change Orders and other additions or deletions, shall be fully incorporated into the Progress Schedule and Network Diagram on the first update after the associated Change Order is approved by Owner, including adjustments to the Contract Price.

1.05 TIME IMPACT ANALYSIS

A. General:

1. Prepare and submit a time impact analysis when one or more of the following occurs:

a. Change Order proposal is prepared

b. When delays are experienced.

2. Time impact analysis shall illustrate the influence of each Change Order or delay.

3. Each time impact analysis shall include a sketch (fragnet) demonstrating how Contractor proposes to incorporate the changes in the Project or, as applicable, delays into the Progress Schedule. Fragnet shall include all logic, and additions required as result of said Change Order or delay.

4. Fragnet shall show all CPM logic revisions for the Work associated with the Change Order or delay and its relationship to other Activities in the Network Diagram.

5. Timing of Time Impact Analysis:

a. Submit each time impact analysis within 7 days after the following, as applicable:

1) Start of the delay.

2) After the submittal of Change Order proposal to Engineer

B. Evaluation by Engineer and Acceptance:

1. Engineer’s evaluation of each time impact analysis comprised of complete information will be completed in timely manner after Engineer’s receipt. Changes in the Contract Times will be made only by Change Order.

2. When mutual agreement is reached between the parties, on effect of the change or delay in the Project, incorporate into the next Progress Schedule update the associated fragnets illustrating the influence of changes and delays.

1.06 RECOVERY SCHEDULES

A. General:

1. When updated Progress Schedule indicates that the ability to comply with the Contract Times falls 30 or more days behind schedule, and there is no excusable delay, Change Order, or Work Change Directive to support an extension of the Contract Times, Contractor shall prepare and submit a recovery Progress Schedule demonstrating Contractor's plan to accelerate the Project to achieve compliance with the Contract Times (i.e., "recovery" schedule) for Engineer's acceptance.

2. Submit recovery schedule within 14 days after submittal of updated Progress Schedule where need for recovery schedule is indicated.

B. Implementation of Recovery Schedule:

1. At no additional cost to Owner, Contractor shall do one or more of the following:

a. Furnish additional labor and construction equipment

b. Employ additional work shifts

c. Expedite procurement of materials and equipment to be incorporated into the Work

d. Other measures necessary to complete the Work within the Contract Times.

2. Upon acceptance of recovery schedule by Engineer, incorporate recovery schedule into the next Progress Schedule update.

C. Lack of Action: Contractor's refusal, failure or neglect to submit a recovery schedule, shall constitute reasonable evidence that Contractor is not prosecuting the Work or separable part thereof with the diligence that will ensure completion within the Contract Times. Such lack of action shall constitute sufficient basis for Owner to exercise remedies available to Owner under the Contract Documents

1.07 USE OF FLOAT

A. Total Float and Contract Float belong to the Project and may be used by Owner, Engineer, or Contractor to accommodate modifications, regardless of origination, in the Work or to mitigate the effect of events that may delay performance or completion of the Work.

B. Changes or delays that influence scheduled Work Activities with Float and that do not extend the critical path will not be justification for an extension in Contract Times.

1.08 SUBMITTALS

A. Action/Informational Submittals:

1. Initial Progress Schedules:

a. Preliminary Progress Schedule with associated Network Diagrams.

b. Acceptable Progress Schedule with associated Network Diagrams.

2. Progress Schedule Updates:

a. Progress Schedule updates shall comply with requirements of this Section, and shall include updated Progress Schedule, updated Network Diagram when relationships among Activities are changed.

b. Submit updated Progress Schedule at each progress meeting. If a Progress Schedule remains unchanged from one progress meeting to the next, submit a written statement to that effect.

3. Time Impact Analyses: Submit in accordance with this Section.

4. Recovery Schedule: Submit in accordance with this Section.

5. Qualifications: Progress Schedule preparer, and other personnel that will assist Progress Schedule preparer in preparing and maintaining the Progress Schedule.

PART 2 – PRODUCTS (NOT USED)

PART 3 – EXECUTION (NOT USED)

[END OF SECTION]

SECTION 01370

SCHEDULE OF VALUES

PART 1 – GENERAL

1.01 SUMMARY

A. Section Includes:

1. General requirements for preliminary and final Schedule of Values.

2. Schedule of Values and the Progress Schedule updates specified in Section 01310 – Construction Progress Schedules, shall be basis for preparing each Application for Payment. Schedule of Values may be used as a basis for negotiating price of changes, if any, in the Work.

1.02 ADMINSTRATIVE REQUIREMENTS

A. General Requirements:

1. Schedule of Values shall include breakdown of costs for materials and equipment, installation, and other costs used in preparing the Bid by Contractor and each Subcontractor. List purchase and delivery costs for materials and equipment for which Contractor may apply for payment as stored materials.

2. Include separate amounts for each Specification Section in the Contract Documents by structure, building, and work area.

3. Identify each line item with number corresponding to the associated Specification Section number. List sub-items of major products or systems, as appropriate or when requested by Engineer.

4. Include in Schedule of Values unit price payment items with their associated quantity. Provide in the Schedule of Values detailed breakdown of unit prices when required by Engineer.

5. Include in Schedule of Values itemized list of Work for each major part of the Contract, for each payment item.

6. Sum of individual values shown on the Schedule of Values shall equal the total of associated payment item. Sum of payment item totals in the Schedule of Values shall equal the Contract Price.

B. Specific Requirements:

1. Include in each line item a directly proportional amount of Contractor's overhead and profit. Do not include overhead and profit as separate item(s).

2. Include separate line item for each allowance, and for each unit price item

3. Include line item for bonds and insurance in amount not exceeding two percent of the Contract Price. This may be applied for in the first Application for Payment.

4. Include items for the General Conditions, permits (when applicable), construction Progress Schedule, and other items required by Engineer. Include such items in Applications for Payment on schedule accepted by Engineer

5. Line items for Site maintenance such as dust control, snow removal, compliance with storm water pollution prevention plans and permits, spill prevention control and countermeasures plans, and for construction photographic documentation; temporary utilities and temporary facilities, field offices, temporary controls, field engineering, and similar Work shall be included in the Schedule of Values and proportioned in Applications for Payment throughout duration of the Work.

6. Include separate line items under each appropriate payment item for mobilization and demobilization. Document for Engineer the activities included in mobilization and demobilization line items.

    a. Mobilization will be limited to two percent of the Contract Price, and will be paid in two payments, each of 50 percent of total amount for mobilization.

    b. Demobilization shall be at least one percent of the Contract Price and shall be included with the Application for Payment following Substantial Completion, or other schedule accepted by Engineer.

7. Costs for submittals, operations and maintenance manuals, field testing, and training of operations and maintenance personnel shall be as follows, unless otherwise accepted by Engineer:

    a. Up to three percent of total cost of each item (including overhead and profit), including materials and equipment, and installation, may be apportioned to testing and included in the Application for Payment following Engineer’s acceptance of the associated written Site testing report(s).

8. Sub-schedule of Unit Material Values:

    a. Submit a sub-schedule of unit costs and quantities for products specified under a unit cost allowance and for products on which progress payments will be requested for stored products.

    b. The form of submittal shall parallel that of the Schedule of Values, with each item identified using the same corresponding line item in the Schedule of Values.

    c. The unit quantity for bulk materials shall include an allowance for normal waste.

d. The unit values for the materials shall be broken down into:

1) Cost of the material, delivered and unloaded at the site, with taxes paid.

2) Installation costs, including Contractor's overhead and profit.

e. The installed unit value multiplied by the quantity listed shall equal the cost of that item in the Schedule of Values.

C. Preliminary Schedule of Values: Submit preliminary Schedule of Values to Engineer for initial review. Contractor shall incorporate Engineer’s comments into the Schedule of Values and resubmit to Engineer. Engineer may require corrections and re-submittals until Schedule of Values is acceptable.

D. Time Frame for Submittals:

1. Submit preliminary Schedule of Values within ten days of date that the Contract Times commence running in accordance with the Notice to Proceed, or as otherwise required by the Contract Documents.

2. Submittal of the Schedule of Values shall be in accordance with the General Conditions. Engineer will not accept Applications for Payment without an acceptable Schedule of Values.

3. When required by Engineer, promptly submit updated Schedule of Values to include cost breakdowns for changes in the Contract Price.

1.03 SUBMITTALS

A. Submit the following:

1. Electronic pdf copy of preliminary Schedule of Values.

2. Electronic pdf copy of final Schedule of Values.

PART 2 – PRODUCTS (NOT USED)

PART 3 – EXECUTION (NOT USED)

[END OF SECTION]

SECTION 01410

TESTING LABORATORY SERVICES

PART 1 – GENERAL

1.01 SUMMARY

A. This specification addresses requirements for testing services specifically required to be provided by the Contractor. This section does not apply to any testing required to be provided by the Owner or Owner's representative.

B. This section does not apply to any Special Inspections. Special Inspections cannot be provided by the Contractor in accordance with the governing Building Code.

C. Contractor shall employ and pay for independent testing entity to perform specified services covered by this specification. Entity selected shall be subject to approval by Engineer.

D. Inspection, sampling, and testing shall be as specified in the individual Specification Sections.

E. Related Sections, but not limited to, the following:

1. Section 02200 – Earthwork.

2. Section 02640 – Utility Structures.

3. Division 03 specifications.

1.02 ADMINISTRATIVE REQUIREMENTS

A. Owner's Responsibilities:

1. The Owner will authorize from the testing allowance the cost of one (1) series of initial tests only, on the area or item being evaluated. The Contractor shall pay for costs of additional testing as required due to improper performance of Work.

B. Contractor's Responsibilities:

1. Provide to laboratory representative samples of materials to be tested, in required quantities.

2. Provide labor and facilities:

a. To provide access to the Work to be tested, and where required, to Suppliers' operations.

b. To obtain and handle samples at the Site, in accordance with testing facility's procedures.

c. To facilitate inspections and tests.

d. For testing entity's exclusive use for storage and curing of test samples.

e. Forms for preparing concrete test beams and cylinders.

3. Notify testing entity and Engineer sufficiently in advance of operations to allow for assignment of personnel and scheduling of tests.

4. When tests cannot be performed after such notice, reimburse Owner for laboratory personnel and travel expenses incurred due to Contractor's negligence.

5. Arrange with testing entity and pay for additional services, sampling, and testing required for Contractor's convenience.

6. Provide to testing entity the preliminary design mix proposed for concrete, and other material mixes that require testing by the testing laboratory.

C. Testing Entity's Responsibilities:

1. Cooperate with Contractor and Engineer and provide qualified personnel promptly when notified.

2. Perform specified inspections, sampling, and testing of materials and methods of construction; comply with applicable standards; ascertain compliance with requirements of the Contract Documents.

3. Promptly notify Engineer and Contractor of irregularities or deficiencies in the Work observed during performance of services.

4. Submit specified quantity of report copies of inspections and tests to Contractor and Engineer.

5. Perform additional tests and services as required to ensure compliance with the Contract Documents.

D. Limitations of Authority of Testing Laboratory

1. Laboratory is not authorized to release, revoke, alter, or enlarge on requirements of Contract Documents, approve or accept any portion of the Work, or perform any duties of the Contractor.

E. Report Requirements:

1. Electronic Submittal of testing reports.

2. Include the following information:

    a. Date issued.

    b. Project title, number, and name of the Site.

    c. Testing laboratory name and address.

    d. Name and signature of inspector or person obtaining samples.

    e. Date of inspection or sampling.

    f. Record of temperature and weather.

    g. Date of test.

    h. Identification of material or product tested and associated Specification Section.

    i. Location in the Project.

    j. Type of inspection or test.

    k. Results of tests and observations regarding compliance with the Contract Documents.

1.03 SUBMITTALS

A. Submit copies of material and product test reports where required by the Contract Documents and as requested by Engineer.

B. Quality Assurance Submittals:

1. Qualifications statement indicating experience and facilities for tests required under the Contract Documents.

2. Copy of report of inspection of facilities during most recent NIST inspection tour. Include memorandum of remedies of deficiencies reported during inspection.

3. Copy of certificate of calibration for each instrument or measuring device proposed for use, by accredited calibration agency.

1.04 QUALIFICATIONS

A. Comply with applicable requirements of ASTM E329, Specification for Agencies Engaged in Construction Inspection and/or Testing.

B. Laboratory shall be authorized to operate in the same State or Commonwealth as the Site. Where applicable, laboratory shall be certified by the authority having jurisdiction for the types of testing required.

C. Testing equipment used by laboratory will be calibrated at maximum twelve month intervals by devices of accuracy traceable to either NIST's Standard Reference Materials (SRM), ISO 17025, General Requirements for the Competence of Testing and Calibration Laboratories, or certified by State, Commonwealth, or local bureau of weights and measures, or values of natural physical constants generally accepted in the engineering and scientific community.

PART 2 – PRODUCTS (NOT USED)

PART 3 – EXECUTION (NOT USED)

[END OF SECTION]

SECTION 01510

TEMPORARY UTILITIES

PART 1 – GENERAL

1.01 SUMMARY

A. Contractor shall provide temporary utilities required for the Project and to complete the Work.

1. Make arrangements with utility service companies for temporary services and obtain required permits and approvals for temporary utilities.

2. Pay utility service costs, including connection fees, required for the Work as needed.

3. Continuously maintain adequate utilities for all purposes during the Project, until removal of temporary utilities and temporary facilities. At minimum, provide and maintain temporary utilities through Substantial Completion and removal of temporary field offices and sheds.

4. Maintain, including cleaning, temporary utilities and continuously provide consumables as required.

5. Temporary utilities and temporary facilities shall be adequate for personnel using the Site and requirements of Project.

6. Provide temporary utilities and temporary facilities in compliance with Laws and Regulations and, when applicable, requirements of utility owners.

B. Provide the following temporary utilities:

1. Electricity and lighting.

2. Telephone and communications.

3. Heating.

4. Sanitary facilities.

5. Water service.

6. First-aid facilities.

7. Fire protection.

1.02 ADMINSTRATIVE REQUIREMENTS

A. Use of Owner's System:

1. Existing Utility Systems: Do not use systems in existing buildings or structures for temporary utilities without Owner's written permission and mutually acceptable basis agreed upon by the parties for proportionate sharing of costs between Owner and Contractor.

2. Use of Permanent Utility Systems Provided Under the Project:

a. Permanent lighting, water, heating, ventilating, and fire protection systems and first-aid facilities may be used to provide temporary utilities and temporary facilities if the following are met:

1) Obtain Owner's written permission to use permanent systems.

2) Permanent systems provided under this project that are to be used for temporary utilities or as temporary facilities shall have achieved Substantial Completion, including complete functionality of all controls, prior to their use by Contractor as temporary utilities/facilities.

3) Contractor shall pay all costs while using permanent system, including operation, maintenance, replacement of consumables, and provide replacement parts.

b. Do not use the following permanent facilities:

1) Telephone and communication facilities.

2) Sanitary facilities.

1.03 SYSTEM DESCRIPTION

A. Electricity and lighting:

1. Contractor shall provide electrical and lighting service for construction field offices, sheds, storage containers, etc. and as required for the Work.

2. General 120/240 V service requirements:

a. Contractor shall provide 120/240 V, single phase, 3-wire temporary system for small power requirements and general lighting.

b. Contractor shall provide main disconnect, overcurrent protection, meter outlet, branch circuit breakers, and wiring for temporary service to the Contractor's field office service connections. Contractor shall provide equipment and appurtenances in accordance with electricity service provider and applicable standards and codes

c. Contractor shall register the 120/240 V electrical service meter in the Contractor's name and shall be responsible for electrical charges at no additional cost to the Owner.

d. Contractor shall provide electrical service other than 120/240 V, single phase, 3-wire service as required for the Work at the Contractor's own expense.

3. General lighting requirements:

a. Contractor shall provide a minimum of 10 foot candles for enclosed and partially enclosed structures for performing the Work.

b. Contractor shall provide a night lighting circuit for security. Light intensity shall be a minimum of 2 foot candles.

c. In Engineer's field office, Contractor shall provide a minimum of 50 foot-candles at desk top height.

4. Contractor shall energize the electrical system 15-minutes prior to and following regular work day hours at the Site. Required from Monday through Friday, all inclusive.

5. Contractor shall energize the night lighting system at end of typical working day and de-energize at start of typical working day. System shall be continuously energized on Saturdays, Sundays, and holidays.

6. Contractor shall provide an independent grounding cable connected directly to the structure, building, and equipment for erection and fabrication by electrical welders. Grounding by adjacent conduit, piping, etc. shall be prohibited at the Site.

7. Contractor shall coordinate usage of temporary electrical system with Subcontractors, Suppliers, and Owner including the following:

a. Usage is suitable for 120V, single phase, 60 Hz operation with a maximum operating input of 1,500 volt-amperes.

b. One unit connected to a single outlet.

c. Restrict usage in case of overloading circuits to correct loading.

B. Cellular mobile phones: Contractor shall provide cell phone for its operations at the Site and for summoning emergency medical assistance.

C. Heating:

1. Contractor shall provide temporary heating, ventilation coverings and enclosures necessary to protect the Work and materials against wetness and temperature damage, to dry out the Work, and to facilitate the Work in structures.

2. Equipment, fuel, materials, personnel and methods used shall be adequate to maintain critical installation temperatures and ventilation of Work at all times in areas where necessary to perform the Work.

3. Enclosed structures shall have a minimum temperature of 50°F, unless otherwise specified, where Work is performed.

4. Contractor shall provide sufficient heat to maintain a minimum temperature of 65°F before and during application of interior finishing, painting, coating, etc.

5. Contractor shall replace any Work damaged by dampness or insufficient/abnormal heating at no cost to the Owner.

D. Sanitary facilities:

1. Contractor shall provide suitably-enclosed chemical or self-contained toilets for Contractor's employees and visitors to the Site. Location of temporary toilets shall be acceptable to Owner and screened from public observation.

2. Facilities shall be maintained and provided in accordance with State or Commonwealth Labor Regulations and local ordinances. Contents shall be removed and disposed in accordance with local and state or commonwealth regulations as required.

3. Contractor shall be prohibited from committing nuisances within, on, or in the vicinity of the Site.

E. Water service:

1. Contractor shall provide temporary water service for the Work including for construction purposes, sanitary facilities, fire protection, field office, and cleaning purposes.

2. Where new water services are being installed as part of the project, the water service will be made available to after installation and acceptance, and with City's written approval. All City water shall be metered using a Pinellas-County approved flow meter and connected to a backflow preventor, where one does not exist.

F. First-aid facilities:

1. Contractor shall provide temporary first-aid stations at or immediately adjacent to the Site's major work areas. Contractor shall provide temporary first-aid stations inside its temporary field office. Locations of first-aid stations shall be determined by Contractor's safety representative.

2. Contractor shall provide list of emergency telephone numbers at each hardwired telephone at the Site. List shall be in accordance with the list of emergency contact information required in Section 01200 – Project Meetings.

G. Fire protection:

1. Contractor shall comply with NFPA 241, Safeguarding Building Construction, Alteration, and Demolition Operations, and requirements of fire marshals and authorities having jurisdiction at the Site.

2. Contractor shall provide temporary fire exits, fire extinguishers, hoses and safety devices as required by authorities having jurisdiction.

3. Contractor shall notify Engineer, Owner, and fire marshals in the event of fire at the Site including, but not limited to, fuel tanks and similar hazardous utilities and devices. Contractor shall cooperate with Owner of fuel tank and utilities to prevent occurrence of fire or explosion.

4. Contractor shall perform safety precautions and comply with fire marshal's instructions in the event of fire.

PART 2 – PRODUCTS

2.01 EQUIPMENT

A. Materials and equipment for temporary systems may be new or used but shall be adequate for purposes intended and shall not create unsafe conditions and shall comply with Laws and Regulations.

B. Provide required materials, equipment, and facilities, including piping, wiring, and controls.

C. Electrical system requirements: System shall consist of wiring, switches, insulated supports, poles, fixtures, sockets, receptacles, lamps, guards, cutouts and fuses as required for completion of the Work.

PART 3 – EXECUTION

3.01 INSTALLATION

A. Install temporary facilities in neat, orderly, manner, and make structurally, mechanically, and electrically sound throughout.

B. Location of Temporary Utilities and Temporary Facilities:

1. Locate temporary systems for proper function and service.

2. Temporary systems shall not interfere with or provide hazards or nuisances to: the Work under this and other contracts, movement of personnel, traffic areas, materials handling, hoisting systems, storage areas, finishes, and work of utility companies.

3. Do not install temporary utilities on the ground, with the exception of temporary extension cords, hoses, and similar systems in place for short durations.

C. Modify and extend temporary systems as required by progress of the Work.

3.02 MAINTENANCE

A. Maintain temporary systems to provide safe, continuous service as required.

B. Properly supervise operation of temporary systems:

1. Enforce compliance with Laws and Regulations.

2. Enforce safe practices.

3. Prevent abuse of services.

4. Prevent nuisances and hazards caused by temporary systems and their use.

5. Prevent damage to finishes.

6. Ensure that temporary systems and equipment do not interrupt continuous progress of construction.

C. At end of each work day, check temporary systems and verify that sufficient consumables are available to maintain operation until work is resumed at the Site. Provide additional consumables if the supply on hand is insufficient.

D. Contractor shall replace broken and burned out lamps, blown fuses, and damaged wiring and appurtenances as required to maintain adequate and safe operating conditions.

E. Contractor shall permit subcontractors and others at a mutually agreed arrangement to use temporary electrical system that meet the following requirements:

1. Equipment are suitable for 120 V, single phase, 60 Hz operation.

2. Operating input does not exceed 1,500 volt-amperes.

3. Single piece of equipment connected to one outlet.

4. Contractor shall restrict use of equipment as required to prevent overloading circuits.

3.03 CLOSEOUT ACTIVITES

A. Completely remove temporary utilities, facilities, equipment, and materials when no longer required. Repair damage caused by temporary systems and their removal and restore the Site to condition required by the Contract Documents; if restoration of damaged areas is not specified, restore to preconstruction condition.

B. Contractor is responsible for and shall return to original condition those portions of permanent electric system used in completing the Work.

C. Where temporary utilities are disconnected from existing utility, provide suitable, watertight or gastight (as applicable) cap or blind flange, as applicable, on service line, in accordance with requirements of utility owner.

D. When permanent utilities and systems that were used for temporary utilities, upon Substantial Completion replace all consumables such as filters and light bulbs and parts used during the Work.

END OF SECTION

SECTION 01530

PROTECTION OF WORK AND PROPERTY

PART 1 – GENERAL

1.01 THE REQUIREMENT

A. Contractor shall be responsible for the preservation and protection of property adjacent to the work site against damage or injury as a result of his operations under this Contract. Any damage or injury occurring on account of any act, omission or neglect on the part of the Contractor shall be restored in a proper and satisfactory manner or replaced by and at the expense of the Contractor to an equal or superior condition than previously existed.

B. Contractor shall comply promptly with such safety regulations as may be prescribed by the Owner or the local authorities having jurisdiction and shall, when so directed, properly correct any unsafe conditions created by, or unsafe practices on the part of, his employees. In the event of the Contractor's failure to comply, the Owner may take the necessary measures to correct the conditions or practices complained of, and all costs thereof will be deducted from any monies due the Contractor. Failure of the Engineer to direct the correction of unsafe conditions or practices shall not relieve the Contractor of his responsibility hereunder.

C. In the event of any claims for damage or alleged damage to property as a result of work under this Contract, the Contractor shall be responsible for all costs in connection with the settlement of or defense against such claims. Prior to commencement of work in the vicinity of property adjacent to the work site, the Contractor, at his own expense, shall take such surveys as may be necessary to establish the existing condition of the property. Before final payment can be made, the Contractor shall furnish satisfactory evidence that all claims for damage have been legally settled or sufficient funds to cover such claims have been placed in escrow, or that an adequate bond to cover such claims has been obtained.

1.02 PROTECTION OF WORK AND MATERIAL

A. During the progress of the work and up to the date of final payment, the Contractor shall be solely responsible for the care and protection of all work and materials covered by the Contract.

B. All work and materials shall be protected against damage, injury, or loss from any cause whatsoever, and the Contractor shall make good any such damage or loss at his own expense. Protection measures shall be subject to the approval of the Engineer.

1.03 BARRICADES, WARNING SIGNS AND LIGHTS

A. The Contractor shall provide, erect and maintain as necessary, strong and suitable barricades, danger signs and warning lights along all roads accessible to the public, as required by the authority having jurisdiction, to provide safety to the public. All barricades and obstructions along public roads shall be illuminated at night and all lights for this purpose shall be kept burning from sunset to sunrise.

B. Each Contractor shall provide and maintain such other warning signs and barricades in areas of and around their respective work as may be required for the safety of all those employed in the work, the Owner's operating personnel, or those visiting the site.

C. The wording off all project signage shall be subject to Owner approval. No other signage other than Owner-approved project signage shall be permitted.

1.04 EXISTING UTILITIES AND STRUCTURES

A. The term existing utilities shall be deemed to refer to both publicly owned and privately owned utilities such as electric power and lighting, telephone, water, gas, storm drains, process lines, sanitary sewers and all appurtenant structures.

B. Where existing utilities and structures are indicated on the Drawings, it shall be understood that all of the existing utilities and structures affecting the work may not be shown and that the locations of those shown are approximate only. It shall be the responsibility of the Contractor to ascertain the actual extent and exact location of existing utilities and structures. In every instance, the Contractor shall notify the proper authority having jurisdiction and obtain all necessary directions and approvals before performing any work in the vicinity of existing utilities.

C. Prior to beginning any excavation work, the Contractor shall, through field investigations, determine any conflicts or interferences between existing utilities and new utilities to be constructed under this project. This determination shall be based on the actual locations, elevations, slopes, etc., of existing utilities as determined in the field investigations, and locations, elevation, slope, etc. of new utilities as shown on the Drawings. If an interference exists, the Contractor shall bring it to the attention of the Engineer as soon as possible. If the Engineer agrees that an interference exists, he shall modify the design as required. Additional costs to the Contractor for this change shall be processed through a Change Order as detailed elsewhere in these Contract Documents. In the event the Contractor fails to bring a potential conflict or interference to the attention of the Engineer prior to beginning excavation work, any actual conflict or interference which does arise during the Project shall be corrected by the Contractor, as directed by the Engineer, at no additional expense to the Owner.

D. The work shall be carried out in a manner to prevent disruption of existing services and to avoid damage to the existing utilities. Temporary connections shall be provided, as required, to avoid interruption of existing services. Any damage resulting from the work of this Contract shall be promptly repaired by the Contractor at his own expense in a manner approved by the Engineer and further subject to the requirements of any

authority having jurisdiction. Where it is required by the authority having jurisdiction that they perform their own repairs or have them done by others, the Contractor shall be responsible for all costs thereof.

E. Where excavations by the Contractor require any utility lines or appurtenant structures to be temporarily supported and otherwise protected during the construction work, such support and protection shall be provided by the Contractor. All such work shall be performed in a manner satisfactory to the Engineer and the respective authority having jurisdiction over such work. In the event the Contractor fails to provide proper support or protection to any existing utility, the Engineer may, at his discretion, have the respective authority to provide such support or protection as may be necessary to protect the safety of such utility, and the costs of such measures shall be paid by the Contractor.

PART 2 – PRODUCTS

2.01 MATERIALS, GENERAL

A. Materials may be new or used, suitable for the intended purpose, but must not violate requirements of applicable codes and standards.

2.02 FENCING

A. Minimum fence height shall be six feet.

B. Open Mesh Fence:

1. No. 11 gauge, two inch mesh, 72 inches high galvanized chain link fabric, with extension arms and three strands of galvanized barbed wire.

2. Galvanized steel posts; 1 ½-inch line posts and two-inch corner posts.

2.03 BARRIERS

A. Materials are Contractor's option, as appropriate to serve required purpose.

PART 3 – EXECUTION

3.01 GENERAL

A. Install facilities of a neat and reasonably uniform appearance, structurally adequate for the required purposes.

B. Maintain barriers during entire construction period.

C. Relocate barriers as required by the progress of construction.

3.02 FENCES

A. Provide and maintain fences necessary to assure security of the Site during construction to keep unauthorized people and animals from accessing the Site when construction is not in progress.

B. Gates shall have locks; and keys shall be furnished to the Owner.

C. Provide additional security measures as deemed necessary and approved by the Engineer.

3.03 TREE AND PLANT PROTECTION

A. Preserve and protect existing trees and plants at site which are designated to remain, and those adjacent to site.

B. Consult with the Owner and remove roots and branches which will interfere with construction.

C. Employ qualified and certified tree trimmer to remove branches and treat cuts.

D. Provide temporary barriers to a height of six feet, around each, or around each group, of trees and plants.

E. Protect root zones of trees and plants:

1. Do not allow vehicular traffic or parking.

2. Do not store materials or products.

3. Prevent puddling or continuous running water.

F. Carefully supervise excavating, grading and filling, and other construction operations in the vicinity of the trees and plant to prevent damage.

G. Replace, or suitably repair, trees and plants designated to remain which are damaged or destroyed due to construction operations.

3.04 REMOVAL

A. Completely remove barricades and temporary measures after construction has progressed to the point that they are no longer needed and with Engineer approval.

B. Repair damage caused by construction. Fill and grade areas of the site to the required elevations and clean up the area.

[END OF SECTION]

SECTION 01550

CONTRACTOR ACCESS AND PARKING

PART 1 – GENERAL

1.01 SUMMARY

A. Section Includes:

1. Contractor shall provide and maintain temporary laydown and employee parking areas and appurtenances required during the Project for use by Contractor, other contractors employed on the Project, Owner's, and emergency vehicles.

2. Laydown areas shall be as shown on the Drawings or as mutually agreed between Owner and Contractor during the pre-construction meeting.

3. Laydown and employee parking areas shall be designed and maintained by Contractor and shall be fully passable to vehicles in all weather conditions.

1.02 ADMINSTRATIVE REQUIREMENTS

A. Access roads:

1. Contractor shall construct and maintain such temporary access roads as required to perform the Work.

2. Contractor shall construct access roads, where possible, in locations over the areas of future road systems.

3. Access roads shall be located within the property lines of the Owner unless the Contractor independently secures easements for use and convenience.

   a. Contractor shall submit written documentation to the Engineer for Contractor secured easements across privately held property.

   b. Easement agreements shall specify terms and conditions of use and provisions for Site restoration.

   c. Written release from property owner certifying that terms of the easement agreement have been complied with by the Contractor shall be furnished to the Engineer prior to final payment.

4. Provide access for emergency vehicles.

5. Maintain driveways a minimum of 15 feet wide, between and around combustible materials in storage and mobilization areas.

6. Maintain traffic areas free as possible of excavated materials, construction equipment, products, and debris.

7. Keep fire hydrants and water control valves free from obstruction and accessible for use.

8. Provide traffic control devices as required by governing authorities along established public thoroughfares which will be used as haul routes to site access.

B. Use of existing access roads:

1. Contractor will be allowed to use Owner's existing roads as shown on the Drawings.

2. Prevent interference with traffic on existing roads and parking areas. At all times, keep access roads and entrances serving the Site clear and available to Owner, Owner's employees, emergency vehicles, and other contractors. Do not use access roads or Site entrances for parking or storage of materials or equipment.

3. Contractor shall indemnify and hold harmless Owner and Engineer from expenses caused by Contractor's operations over existing roads and parking areas.

4. Schedule deliveries to minimize use of driveways and Site entrances.

5. Contractor shall suitably maintain existing access road at Contractor's expense for the duration of the Contract time.

C. Contractor parking areas:

1. Contractor employee vehicles shall park in area(s) designated by Owner or as shown on the Drawings.

2. Contractor shall construct and maintain parking area at the Site.

D. State and local regulations:

1. Contractor shall obtain and pay all cost associated with bonds required by authorized entity (i.e., Florida Department of Transportation) for the use of State maintained roads.

2. Contractors shall obey traffic laws and comply with requirements, rules, and regulations of the authorized entity (i.e., Florida Department of Transportation), including local authorities having jurisdiction, to maintain warning signs, lights, barriers, etc. for the protection of traffic on public roadways.

E. Site security:

1. Refer to Section 01530 – Protection of Work and Property.

F. Dust control:

1. Contractor shall take measures to control dust from Contractor's operations and prevent spillage of excavated materials onto access roads.

2. Provide dust control measures in accordance with Section 01560 – Temporary Controls.

PART 2 – PRODUCTS (NOT USED)

PART 3 – EXECUTION (NOT USED)

[END OF SECTION]

SECTION 01560

TEMPORARY CONTROLS

PART 1 – GENERAL

1.01 SUMMARY

A. Contractor shall provide and maintain methods, equipment, and temporary construction as required to control environmental conditions at the Site and adjacent areas.

B. Maintain controls until no longer required.

C. Temporary controls include, but are not limited to, the following:

1. Dust control.

2. Noise controls.

3. Pest and rodent control.

4. Pollution control.

PART 2 – PRODUCTS (NOT USED)

PART 3 – EXECUTION

3.01 DUST CONTROL

A. Contractor shall take measures to control dust from Contractor's operations and prevent spillage of excavated materials on public roads.

B. Contractor shall remove spillage of excavated materials, debris and dust from public roads by methods approved by Engineer.

C. Contractor shall provide temporary dust-proof partitions where required to protect unaltered portions of existing structures and facilities and as directed by Engineer or Owner. Temporary partitions shall be provided where demolition Work is required, to protect equipment and material, and shall consist of the following:

1. Wood studs with plywood on both sides and extend from floor to ceiling.

2. Closure plate at floor and ceiling.

3. One door (minimum) with hardware.

D. Contractor shall refer to applicable sections of local and state/commonwealth regulations on dust control for additional guidance.

1. Contractor shall apply water at locations, quantities, and frequencies required by Engineer to control dust for nuisance prevention to Owner, Engineer, and properties in the vicinity of the Site.

2. Dust control and cleaning measures shall be provided at no additional cost to the Owner.

3.02 NOISE CONTROL

A. Contractor's vehicles and equipment shall minimize noise emissions to greatest degree practicable. Provide mufflers, silencers, and sound barriers when necessary.

B. Noise levels shall comply with Laws and Regulations, including OSHA requirements and local ordinances.

C. Noise emissions shall not interfere with the work of Owner or others.

3.03 PEST AND RODENT CONTROL

A. Provide rodent and pest control as required to prevent infestation of the Site and storage areas.

B. Employ methods and use materials that do not adversely affect conditions at the Site or on adjoining properties.

C. In accordance with laws and regulations, promptly and properly dispose of pests and rodents trapped or otherwise controlled.

3.04 POLLUTION CONTROL

A. General:

1. Provide means, methods, and facilities required to prevent contamination of soil, water, and atmosphere caused by discharge of noxious substances from construction operations.

2. Equipment used during construction shall comply with Laws and Regulations.

B. Spills and Contamination:

1. Provide equipment and personnel to perform emergency measures required to contain spills and to remove contaminated soils and liquids.

2. Excavate contaminated material and properly dispose of off-site, and replace with suitable compacted fill and topsoil.

C. Protection of Surface Waters: Implement special measures to prevent harmful substances from entering surface waters. Prevent disposal of wastes, effluents, chemicals, and other such substances in or adjacent to surface waters and open drainage routes, in sanitary sewers, or in storm sewers.

D. Atmospheric Pollutants:

1. Provide systems for controlling atmospheric pollutants related to the Work.

2. Prevent toxic concentrations of chemicals and vapors.

3. Prevent harmful dispersal of pollutants into atmosphere.

E. Solid Waste:

1. Provide systems for controlling and managing solid waste related to the Work.

2. Prevent solid waste from becoming airborne, and from discharging to surface waters and drainage routes.

3. Properly handle and dispose of solid waste.

[END OF SECTION]

SECTION 01570

TRAFFIC CONTROL

PART 1 – GENERAL

1.01 THE REQUIREMENT

A. Provide, operate and maintain equipment, services and personnel, with traffic control and protective devices, as required to expedite vehicular traffic flow around the construction area.

B. Remove temporary equipment and facilities when no longer required, restore grounds to original, or to specified conditions.

1.02 REFERENCES

A. Traffic regulation shall be in accordance with FDOT Roadway and Traffic Design Standards, Manual on Uniform Traffic Control Devices (MUTCD), and FDOT Standard Specifications, latest Editions.

1.03 TRAFFIC CONTROL PLAN

A. The Contractor shall prepare and submit a Maintenance of Traffic (MOT) plan, where required by the Contract Documents.

1.04 TRAFFIC SIGNALS AND SIGNS

A. Provide and operate traffic control and directional signals required to direct and maintain an orderly flow of traffic in all areas under Contractor's control, or affected by Contractor's operations.

B. Construction requiring traffic signal modification shall be reported to the Owner at least 72 hours prior to the commencement of such activities. All excavation work within 30 feet of any traffic signal shall be reported to the Owner at least 72 hours prior to its commencement.

C. All existing traffic signs shall remain visible throughout construction activities unless superseded by required construction signage.

1.05 FLAGMEN

A. Provide qualified and suitably equipped flagmen when construction operations encroach on traffic lanes, as required for regulation of traffic.

1.06 FLARES AND LIGHTS

A. Provide lights as required by FDOT MUTCD to clearly delineate traffic lanes and guide traffic, for use by flagmen in directing traffic, and to provide illumination of critical traffic and parking areas.

1.07 CONSTRUCTION PARKING CONTROL

A. Control vehicular parking to preclude interference with public traffic or parking, access by emergency vehicles, Owner's operations, or construction operations.

B. Monitor parking of construction personnel's private vehicles.

C. Maintain free vehicular access to and through parking areas and driveways.

D. Prohibit parking on or adjacent to access roads, or in non-designated areas.

1.08 CONSTRUCTION VEHICLES

A. All slow moving construction vehicles shall have a slow moving sign visible from the rear of the vehicle.

B. All vehicles used for construction activities shall have audible back up warning devices.

1.09 ROAD CLOSURES

A. No road shall be closed prior to receiving approval from the Owner.

B. At least seven days prior to a proposed road closure, the Contractor shall submit to the Owner a complete MOT plan. This plan shall include the following minimum information:

1. Sketch of Site and all area roads, streets, and driveways.

2. Proposed detour route.

3. All necessary traffic control devices to be used.

4. Contractor’s emergency contact person name and phone number to be available 24 hours a day.

5. Estimated times/dates of road closure.

C. Only the Owner shall have the authority to approve an emergency City road closure.

PART 2 – PRODUCTS

2.01 MATERIALS

A. All traffic control devices shall meet or exceed FDOT standards.

B. All traffic signs shall have high intensity face material.

PART 3 – EXECUTION

3.01 MAINTENANCE AND INSPECTION

A. Upon notification by the Owner either verbally or in writing, the Contractor shall correct any noted deficiencies within one hour.

B. Inspection of all traffic control items shall be performed by Contractor at least twice per day. One of these inspections shall be at the end of the workday or at night.

[END OF SECTION]

SECTION 01610

PRODUCT REQUIREMENTS AND OPTIONS

PART 1 – GENERAL

1.01 SUMMARY

A. Section includes:

1. Common requirements for products.

2. Contractor's options for selecting products.

3. Requirements for consideration of "or equal" products.

4. Warranty requirements of products.

1.02 REFERENCES

A. Definitions:

1. "Products" includes materials, equipment, machinery, components, fixtures, systems, and other goods incorporated in the Work. Products do not include machinery and equipment used for preparing, fabricating, conveying, erecting, or installing the Work. Products include Owner-furnished goods incorporated in the Work where use of such goods is specifically required in the Contract Documents.

2. "Special Warranties" includes additions or modifications to standard warranty requirements specified in the Contract Documents.

1.03 SUBMITTALS

A. Warranty Log Book:

1. Submit warranty log book prepared specifically for this Project. Submittal shall include a summary listing of all equipment and material warranties furnished in the Contract, date received, and start/end date of warranty period. Individual warranty documentation shall be provided in the submittal.

2. Submit prior to submittal of final Application for Payment.

B. Patent Documentation: Submit licensing arrangement and agreement documentation.

1.04 REQUIREMENT

A. Common Products:

1. Provide products that have not been previously incorporated into another project or facility unless otherwise indicated in the Contract Documents.

2. Provide products of the same generic kind from a single source.

3. Provide products complete with accessories, trim, finish, fasteners, and other items shown, indicated, or required for a complete installation for the indicated use and performance.

4. Standard Products: When available, and unless custom or nonstandard options are specified or indicated, provide standard products of types that have been produced and used successfully in similar situations on other projects.

5. Visual Matching: Where required in the Contract Documents, provide products that match referenced existing construction, approved mock-ups, or approved Sample, as determined by Engineer.

6. Where the Contract Documents include the phrase “as selected” for product color, finish pattern, option, or similar phrase, provide products selected by Engineer as follows:

    a. Standard Range: Where the Contract Documents include the phrase “standard range of colors, patterns, textures” or similar phrase, provide color, pattern, density, or texture selected by Engineer from manufacturer’s product line that does not include premium items.

    b. Full Range: Where the Contract Documents include the phrase “full range of colors, patterns, textures” or similar phrase, Engineer will select color, pattern, density, or texture from manufacturer’s entire product line, including standard and premium items.

B. Product Compatibility:

1. Similar products by the same Supplier shall be compatible with each other, unless otherwise indicated in the Contract Documents.

2. Provide products compatible with products previously selected or installed on the Project.

C. Product Options:

1. For products specified only by reference standard or description, without reference to Supplier, provide products meeting that standard, by a Supplier or from a source that complies with the Contract Documents.

2. For products specified by naming one or more products or Suppliers, provide the named products that comply with the Contract Documents, unless an “or equal” or substitute product is approved by Engineer.

3. For products specified by naming one or more products or Suppliers and the term, “or equal”, when Contractor proposes a product or Supplier as an “or equal”, submit to Engineer a request for approval of an “or equal” product or Supplier.

4. For products specified by naming only one product or manufacturer and followed by words indicating that no substitution is allowed, there is no option and no substitution will be allowed.

D. Concerning Patents:

1. Owner shall be provided a guarantee by Contractor and equipment Supplier that equipment and material furnished in accordance with the Contract Documents is not the subject of patent litigation.

2. Patent litigation or controversy shall include, but not limited to, the following:

a. Actual furnished equipment and material that is subject or could be subject to patent litigation or is known to infringe on a patent.

b. Furnished equipment and material that may result in a process that use of equipment and material in a manner that infringes upon or violates a patent.

3. When patent infringement may occur, Contractor and Supplier shall submit license arrangements among parties, including Contractor, Supplier, and patent owner (controller of patent) at a minimum, which shall permit use of equipment and material as specified in the Contract Documents.

4. Supplier shall indemnify and hold harmless Owner and Engineer against all claims, costs, losses, and damages arising out of or relating to any infringement or patent rights or copyrights incident to the use of equipment and material specified in the Contract Documents and as required in General Conditions and as modified in the Supplemental Conditions.

E. “Or Equal” Products:

1. For proposed products not named in the Contract Documents and considered as an “or equal” as defined in the General Conditions, Contractor shall request in writing Engineer’s approval of the “or equal”. Request for approval of an “or equal” product shall accompany the Shop Drawing or product data submittal for the proposed product and shall include:

a. Contractor’s request that the proposed product be considered as an “or equal” in accordance with the General Conditions, accompanied by Contractor’s certifications required in the General Conditions.

b. Documentation adequate to demonstrate that proposed product does not require revisions to the Contract Documents, that proposed product is consistent with the Contract Documents, and that proposed product will

produce results and performance required in the Contract Documents, and that proposed product is compatible with other portions of the Work.

c. Detailed comparison of significant qualities of proposed product with the products and manufacturers named in the Contract Documents. Significant qualities include attributes such as performance, weight, size, durability, visual effect, performance and specific features and requirements shown or indicated.

d. Evidence that proposed product manufacturer will furnish warranty equal to or better than specified, if any.

e. List of similar installations for completed projects with project names and physical addresses of installation along with the names, telephone numbers, email addresses and physical address of design professionals and owners associated with the referenced installation, if requested.

f. Samples, if requested.

g. Other information requested by Engineer.

1.05 WARRANTY

A. Warranties specified for products shall be in addition to, and run concurrent with, Contractor's general warranty and guarantee and requirements for the required correction period. Disclaimers and limitations in specific product warranties do not limit Contractor's general warranty and guarantee.

1. Product manufacturer's warranty is preprinted written warranty published by product manufacturer and specifically endorsed by product manufacturer to Owner.

2. Equipment and material shall be guaranteed to be free from defects in workmanship, design, and/or materials for a period of one (1) year unless otherwise specified in the individual Specification Section for a Special Warranty.

3. Warranty period shall start on the date of the particular equipment and material is substantially complete, which includes requirements specified in Section 01670 – Checkout and Startup Procedures for start-up certification and specified elsewhere in the Contract Documents.

4. Warranty requirements may be added to or modified in the individual Specification Sections. Special warranty is written warranty required by or incorporated into the Contract Documents, either to extend time limit provided by product manufacturer's warranty or to provide increased rights to Owner.

5. Special Warranty information, if any, will be located in the Specification Section for that product.

B. Requirements for Special Warranties: Provide written Special Warranty document that contains appropriate terms and identification, ready for execution by product manufacturer and Owner. Submit draft warranty with submittals required for product.

1. Manufacturer's Standard Form: Modified to include Project-specific information and properly executed by product manufacturer and other parties as appropriate.

2. Specified Form: When specified forms are included in the Contract Documents, prepare written document, properly executed by product manufacturer and Owner, using appropriate form.

3. Refer to Specifications for content and requirements for submitting Special Warranties.

C. Submit product manufacturer's warranties and special warranties as submittals in accordance with Schedule of Submittals accepted by Engineer.

PART 2 – PRODUCTS (NOT USED)

PART 3 – EXECUTION (NOT USED)

[END OF SECTION]

SECTION 01650

PRODUCT DELIVERY REQUIREMENTS

PART 1 – GENERAL

1.01 SUMMARY

A. Section includes:

1. General requirements for preparing for shipping, delivering, and handling materials and equipment.

2. Contractor shall make all arrangements for transporting, delivering, and handling of materials and equipment required for prosecution and completion of the Work.

1.02 SUBMITTALS

A. Refer to individual Specification Sections for submittal requirements relative to delivery and handling materials and equipment.

1.03 SHIPMENT REQUIREMENTS

A. When practical, factory-assemble materials and equipment. Match mark or tag separate parts and assemblies to facilitate field assembly. Cover machined and unpainted parts that may be damaged by the elements with strippable, protective coating.

B. Package materials and equipment to facilitate handling, and protect materials and equipment from damage during shipping, handling, and storage. Mark or tag outside of each package or crate to indicate the associated purchase order number, bill of lading number, contents by name, Owner's contract name and number, Contractor name, equipment number, and approximate weight. Include complete packing lists and bills of materials with each shipment.

C. Protect materials and equipment from exposure to the elements and keep thoroughly dry and dust-free at all times. Protect painted surfaces against impact, abrasion, discoloration, and other damage. Lubricate bearings and other items requiring lubrication in accordance with manufacturer's instructions.

D. Advance Notice of Shipments:

1. Keep Engineer informed of delivery of all materials and equipment to be incorporated in the Work.

E. Do not ship materials and equipment until:

1. Related Shop Drawings, Samples, and other submittals have been approved or accepted (as applicable) by Engineer, including, but not necessarily limited to, Submittals associated with the materials and equipment being delivered.

2. Manufacturer's instructions for handling, storing, and installing the associated materials and equipment have been submitted to and accepted by Engineer in accordance with the Specifications.

3. Results of source quality control testing (factory testing), when required by the Contract Documents for the associated materials or equipment, have been reviewed and accepted by Engineer.

4. Facilities required for handling materials and equipment in accordance with manufacturer's instructions are in place and available.

5. Required storage facilities have been provided.

1.04 DELIVERY REQUIREMENTS

A. Scheduling and Timing of Deliveries:

1. Arrange deliveries of materials and equipment in accordance with the accepted Progress Schedule and in ample time to facilitate inspection prior to installation.

    a. Equipment and material shall not be delivered to the Site prior to 90 days in advance of scheduled installation.

    b. Partial payment requests will not be processed for materials delivered prior to 90 days before installation or for materials that are improperly stored.

2. Schedule deliveries to minimize space required for and duration of storage of materials and equipment at the Site or delivery location, as applicable.

3. Coordinate deliveries to avoid conflicting with the Work and conditions at Site, and to accommodate the following:

    a. Work of other contractors and Owner.

    b. Owner's operations and maintenance.

    c. Storage space limitations.

    d. Availability of equipment and personnel for handling materials and equipment.

    e. Owner's use of premises.

4. Deliver materials and equipment to the Site during regular working hours.

5. Deliver materials and equipment to avoid delaying the Work and the Project, including work of other contractors, as applicable. Deliver anchor system materials, including anchor bolts to be embedded in concrete or masonry, in ample time to avoid delaying the Work.

B. Deliveries:

1. Shipments shall be delivered with Contractor's name, Subcontractor's name (if applicable), Site name, Project name, and contract designation clearly marked.

2. Site may be listed as the "ship to" or "delivery" address; but Owner shall not be listed as recipient of shipment unless otherwise directed in writing by Engineer.

3. Provide Contractor's telephone number to shipper; do not provide Owner's telephone number.

4. Arrange for deliveries while Contractor's personnel are at the Site. Contractor shall receive and coordinate shipments upon delivery. Shipments delivered to the Site when Contractor is not present will be refused by Owner, and Contractor shall be responsible for the associated delays and additional costs, if incurred.

C. Containers and Marking:

1. Have materials and equipment delivered in manufacturer's original, unopened, labeled containers.

2. Clearly mark partial deliveries of component parts of materials and equipment to identify materials and equipment, to allow easy accumulation of parts, and to facilitate assembly.

D. Inspection of Deliveries:

1. Immediately upon delivery, Contractor shall inspect shipment to verify that:

a. Materials and equipment comply with the Contract Documents and approved or accepted (as applicable) submittals.

b. Quantities are correct.

c. Materials and equipment are undamaged.

d. Containers and packages are intact and labels are legible.

e. Materials and equipment are properly protected.

2. Promptly remove damaged materials and equipment from the Site and expedite delivery of new, undamaged materials and equipment, and remedy incomplete or lost materials and equipment to furnish materials and equipment in accordance with the Contract Documents, to avoid delaying progress of the Work.

3. Advise Engineer in writing when damaged, incomplete, or defective materials and equipment are delivered, and advise Engineer of the associated impact on the Progress Schedule.

1.05 HANDLING REQUIREMENTS

A. Provide equipment and personnel necessary to handle materials and equipment, including those furnished by Owner, by methods that prevent soiling or damaging materials and equipment and packaging.

B. Provide additional protection during handling as necessary to prevent scraping, marring, and otherwise damaging materials and equipment and surrounding surfaces.

C. Handle materials and equipment by methods that prevent bending and overstressing.

D. Lift heavy components only at designated lifting points.

E. Handle materials and equipment in safe manner and as recommended by the manufacturer to prevent damage. Do not drop, roll, or skid materials and equipment off delivery vehicles or at other times during handling. Hand-carry or use suitable handling equipment.

PART 2 – PRODUCTS (NOT USED)

PART 3 – EXECUTION (NOT USED)

[END OF SECTION]

SECTION 01660

PRODUCT STORAGE AND PROTECTION REQUIREMENTS

PART 1 – GENERAL

1.01 SUMMARY

A. General requirements of storing and protecting equipment and materials.

1.02 STORAGE

A. Store and protect materials and equipment in accordance with manufacturer's recommendations and the Contract Documents.

B. Contractor shall make all arrangements and provisions necessary for, and pay all costs for, storing materials and equipment. Construction equipment, and materials and equipment to be incorporated into the Work shall be placed to avoid injuring the Work and existing facilities and property, and so that free access is maintained at all times to all parts of the Work and to public utility installations in vicinity of the Work. Store materials and equipment neatly and compactly in locations that cause minimum inconvenience to Owner, other contractors, public travel, and owners, tenants, and occupants of adjoining property. Arrange storage in manner to allow easy access for inspection.

C. Areas available at the Site for storing materials and equipment are shown or indicated in the Contract Documents, or as approved by Engineer.

D. Store materials and equipment to become Owner's property to facilitate their inspection and ensure preservation of quality and fitness of the Work, including proper protection against damage by freezing, moisture, and high ambient temperatures. Store in indoor, climate-controlled storage areas all materials and equipment subject to damage by moisture, humidity, heat, cold, and other elements, unless otherwise acceptable to Owner.

E. Contractor shall be fully responsible for loss or damage (including theft) to stored materials and equipment.

F. Do not open manufacturer's containers until time of installation, unless recommended by the manufacturer, directed by Engineer, or otherwise specified in the Contract Documents.

G. Do not store materials or equipment in structures being constructed unless approved by Engineer in writing.

H. Do not use lawns or other private property for storage without written permission of the owner or other person in possession or control of such premises.

I. Contractor shall not store unnecessary equipment and materials at the Site.

J. Contractor shall prevent structures from being loaded with a weight that endanger its security and/or safety of persons.

K. Stored equipment and materials shall not be placed within 10 feet of fire hydrants.

L. Gutters, drainage channels and inlets shall be kept unobstructed at all times.

1.03 PROTECTION

A. Contractor shall provide temporary storage containers/facilities, if required, to protect equipment and materials at the Site.

B. Equipment to be incorporated into the Work shall be boxed, crated, or otherwise completely enclosed and protected during shipping, handling, and storage, in accordance with Section 01650 – Product Delivery Requirements.

C. Store all materials and equipment off the ground (or floor) on raised supports such as skids or pallets.

D. Protect painted surfaces against impact, abrasion, discoloration, and other damage. Painted equipment surfaces that are damaged or marred shall be repainted in their entirety in accordance with equipment manufacturer and paint manufacturer requirements, to the satisfaction of Engineer.

1.04 SPECIFIC STORAGE REQUIREMENTS

A. Uncovered:

1. The following types of materials may be stored outdoors without cover on supports so there is no contact with the ground:

    a. Piping, except polyvinyl chloride (PVC) or chlorinated PVC (CPVC) pipe.

B. Covered:

1. The following materials and equipment may be stored outdoors on supports and completely covered with covering impervious to water:

    a. Grout and mortar materials.

    b. Rough lumber.

    c. PVC and CPVC pipe.

2. Tie down covers with rope, and slope covering to prevent accumulation of water.

C. Fully Protected:

1. All materials and equipment not named as uncovered or covered in this Section, shall be stored on supports in buildings or trailers that have concrete or wooden flooring, roof, and fully closed walls on all sides. Covering with plastic sheeting or similar material in space without floor, roof, and walls is not acceptable. Comply with the following:

    a. Provide heated storage for materials and equipment that could be damaged by low temperatures or freezing.

    b. Provide air-conditioned storage for materials and equipment that could be damaged by high temperatures.

    c. Protect mechanical and electrical equipment from being contaminated by dust, dirt, and moisture.

    d. Maintain humidity at levels recommended by manufacturers of electrical and electronic equipment.

    e. Energize space heaters fore electrical equipment and material.

D. Maintenance of Storage: On scheduled basis, periodically inspect stored materials and equipment to ensure that:

    1. Condition and status of storage facilities is adequate to provide required storage conditions.

    2. Required environmental conditions are maintained on continuing basis.

    3. Materials and equipment exposed to elements are not adversely affected.

1.05 RECORDS

A. Keep up-to-date account of materials and equipment in storage to facilitate preparation of Applications for Payment, if the Contract Documents provide for payment for materials and equipment not incorporated in the Work but delivered and suitably stored at the Site or at another location agreed to in writing.

PART 2 – PRODUCTS (NOT USED)

PART 3 – EXECUTION (NOT USED)

[END OF SECTION]

SECTION 01670

CHECKOUT AND STARTUP PROCEDURES

PART 1 – GENERAL

1.01 SUMMARY

A. Section Includes:

1. Checkout of products and equipment.

2. Startup procedures of products and equipment.

B. Contractor shall initially start up and place equipment installed under the Contract into successful operation, in accordance with the equipment manufacturer's written instructions and as instructed by Supplier at the Site.

C. Provide all material, labor, tools, and equipment required to complete equipment checkout and start-up.

D. Provide chemicals, lubricants, and other required operating fluids.

E. General activities include:

1. Cleaning, as required under other provisions of the Contract Documents.

2. Removing temporary protective coatings.

3. Checking and correcting (if necessary) leveling plates, grout, bearing plates, anchorage devices, fasteners, and alignment of piping, conduits, and ducts that may place stress on the connected equipment.

4. All adjustments required.

1.02 ADMINISTRATIVE REQUIREMENTS

A. Definitions:

1. Displacement, as used herein, shall mean total peak-to-peak movement of vibrating equipment, in mils; velocity or speed of the vibration cycle, measured in distance per time, velocity and acceleration of the vibration cycle. Displacement, velocity and acceleration shall be measured by instruments/equipment equal to IRD Mechanalysis, Bentley, Nevada.

B. Coordination:

1. Coordinate checkout and start-up with other contractors performing Work at the Site.

2. Do not start up system or subsystem for continuous operation until all components of that system or subsystem, including instrumentation and controls, have been tested to the extent practicable and proven to be operable as intended by the Contract Documents.

3. Responsibility for proper operation is by Contractor.

4. Supplier shall be present during checkout, start-up, and initial operation, except as otherwise specified.

5. Do not start up system, unit process, or equipment without submitting acceptable preliminary operations and maintenance manuals by Contractor, in accordance with Section 01730 – Operations and Maintenance Data.

C. Contractor's Requirements Prior to Owner's Responsibility:

1. Owner will assume responsibility for the equipment upon Substantial Completion.

2. Prior to turning over to Owner responsibility for operating and maintaining system or equipment shall be in accordance with this Section and the following requirements:

a. Submit acceptable final operations and maintenance manuals in accordance with Section 01730 – Operations and Maintenance Data.

b. Provide training of operations and maintenance personnel in accordance with Section 01821 – Instruction of Owner's Personnel.

c. Complete system field quality control testing in accordance with the Contract Documents including, but not limited to, the following:

1) Start-up certification shall be performed and completed by the equipment Supplier for the equipment and material prior to be placed into intended use by Owner as specified in the Contract Documents.

2) Equipment and material shall be operated for a minimum 14-day operational period to verify performance, unless otherwise required by the Contract Documents or approved by the Owner in writing. In addition to specific requirements specified in the individual specification sections, process data that is recorded in the PLC shall be submitted to the Engineer in tabular format showing hourly process performance data. A log of all alarms shall also be submitted, along with notes describing corrective measures applied in response to alarm condition.

3) If equipment and material does not perform satisfactorily during the operational period, then the warranty period start shall be delayed until satisfactorily performance is verified.

a) Contractor shall repair or replace equipment and material that does not perform satisfactorily at no cost to Owner.

b) Contractor shall furnish all equipment and material, labor, and incidentals necessary to provide equipment and material to the performance level required by the Contract Documents.

d. Obtain from Engineer final certificate of Substantial Completion for either entire Work or the portion being turned over to Owner.

1.03 SUBMITTALS

A. Startup Schedule: Detailed summary of schedule, duration, manpower requirement, and Contractor's means and methods for startup.

B. Vibration testing results.

C. Closeout Submittals: Manufacturer's certification of installation in accordance with this Section.

D. Startup testing and operational demonstration performance data.

PART 2 – PRODUCTS (NOT USED)

PART 3 – EXECUTION

3.01 PRELIMINARY REQUIREMENTS

A. Prior to the start-up of the facilities, Contractor shall have prepared and tested all equipment, subsystems and systems in accordance with the requirements of the individual Specification Section to check its ability for sustained operation, including inspections and adjustments by Manufacturer's representative.

B. Contractor shall develop and submit schedule in accordance with this Section.

C. After the facilities are sufficiently complete to permit start-up, Contractor shall furnish competent personnel to start-up the facilities. Contractor will be responsible for startup of all facilities constructed under this Contract. During the initial start-up period the Contractor shall check and provide for mechanical operation in accordance with the Contract Documents.

3.02 FIELD QUALITY CONTROL

A. Manufacturers' Field Services:

1. When specified, furnish services of factory trained representatives of material and equipment manufacturers as specified, including supervising installation, adjusting, checkout, start-up, and testing of materials and equipment.

2. Certification:

a. When services by manufacturer are required at the Site, within 14 days after first test operation of equipment, submit to Engineer a letter from manufacturer, on manufacturer's letterhead, stating that materials and equipment are installed in accordance with manufacturer's requirements and installation instructions, and in accordance with the Contract Documents.

b. Include in the final operations and maintenance manual for the associated equipment a copy of the letter or completed form, as applicable.

3. Manufacturer shall bring any discrepancies to the immediate attention of the Contractor for correction. Contractor shall promptly correct any discrepancies noted by the Manufacturer. Manufacturer shall coordinate correction of discrepancies with the Contractor. Discrepancies and their correction shall be noted in inspection records and in all required reports. Any corrections that result in changes to the work as shown on the Contract Documents shall be approved by the Engineer prior to their execution.

3.03 VIBRATION TESTING

A. Stationary rotating equipment, products and materials shall have vibration testing performed at the Site with a rated horsepower exceeding 1 horsepower.

B. Vibration testing shall be performed by an experienced factory-trained and authorized third-party analysis expert shall be provided for and paid for by the Contractor. Each unit or pump system shall be tested separately without duplicate equipment running. All field testing shall be done in the presence of the Engineer. The Engineer shall be furnished with seven (7) certified copies of vibration test data for each test performed.

C. General testing requirements:

1. Variable speed drives – Tests shall be conducted at the full range of speeds between maximum and minimum.

2. Two-speed drives – Tests shall be conducted at both speeds.

3. Constant-speed drives – Tests shall be conducted under various loading conditions as determined by the Engineer.

4. Frequency of vibration, in frequency (i.e. Hz, cycles per second) and cycles per minute (cpm), shall be determined when vibration exceeds specified levels or as otherwise necessary. Vibration shall be measured on the bearing housing and the motor, unless other additional locations are deemed necessary by the Engineer and/or specified, the vibration analyst and/or published industry standards.

5. Vibration shall be checked in the radial and axial directions. Vibration shall be limited to the latest version of the relevant Hydraulic Institute (HI) Standards.

    a. Unless otherwise specified elsewhere, axial vibration shall not exceed 0.1 in/sec; and radial vibration shall not exceed 0.2 in/sec. For pumps radial vibration shall not exceed that permitted by the Hydraulic Institute Standards except that, at vibration frequencies in excess of 8,000 cpm, the velocity shall not exceed 0.2 in/sec.

6. Noise or vibration in any rotating equipment which the Engineer judges to be excessive or damaging, shall be cause for rejection.

D. Test results:

1. Contractor shall correct deficiencies within thirty days when vibration field test results exceed source quality control tests results, Manufacturer's recommendations, or the limits specified in the Contract Documents.

2. After corrections have been completed, the vibration testing shall be re-run at the Contractor's expense and the results re-submitted to the Engineer for review.

3.04 SYSTEM START-UP

A. Equipment and materials shall be provided in conformance with the manufacturer's installation instructions and in accordance with the Contract Documents.

B. Provide start-up services as specified in the individual Specification Sections.

C. Contractor shall furnish consumables required for startup including, but not limited to, electricity, water, chemicals, and lubrication. Contractor shall provide a plan for disposal of water used for testing unless otherwise specified in the Contract Documents.

D. General system requirements:

1. Start-up of the plant by Contractor shall include all mechanical systems, including but not limited to, pumps, compressors, and like equipment, and the ventilating, air conditioning (or heating), plumbing, and electrical systems. Start-up of either the heating or air conditioning systems is dependent upon the time of year that the plant start up is initiated. Contractor will be required to return at the beginning of the next heating or air conditioning season (whichever is applicable) to start the appropriate system.

2. Cleaning as required under provisions of the Contract Documents.

3. Remove temporary protective coatings.

4. Flushing and replacing greases and lubricants as required by Manufacturer

5. Lubrication.

6. Verify the following:

    a. Shaft and coupling alignments and reset where needed.

    b. Set motor, pump and other equipment rotation, safety interlocks, and belt tensions.

    c. Leveling plates, grout, bearing plates, anchor bolts, fasteners, and alignment of piping, conduits and ducts that may apply stress on equipment.

7. Valves:

    a. Tighten packing glands to ensure no leakage but allow valve stems to operate without galling.

    b. Replace packing in valves to retain maximum adjustment after system is determined to be complete.

    c. Replace packing on valves that continue to leak.

    d. Remove and repair bonnets that leak.

    e. After cleaning, coat packing gland threads and valve stems with surface preparation of “Molycote” or “Fel-Pro”.

8. Verify that control valve seats are free of foreign matter and are properly positioned for intended service.

9. Tighten flanges and other pipe joints after system has been placed in operation.

10. Replace gaskets that show signs of leakage after tightening.

11. Inspect all joints for leakage:

    a. Promptly remake each joint that appears to be faulty; do not wait for rust other corrosion to form.

    b. Clean threads on both parts and apply compound and remake joints.

12. After system has been placed in operation, clean valve seats and headers in fluid system to ensure freedom from foreign matter.

13. Remove rust, scale, and foreign matter from equipment and renew defaced surfaces.

14. Repair damaged insulation.

[END OF SECTION]

SECTION 01730

OPERATION AND MAINTENANCE DATA

PART 1 – GENERAL

1.01 SUMMARY

A. Section Includes: Requirements for operation and maintenance data, manuals, and documentation.

1. Submit operation and maintenance data, in accordance with this Section and in accordance with requirements elsewhere in the Contract Documents, as instructional and reference manuals by operations and maintenance personnel at the Site.

2. Required operation and maintenance data groupings are listed in this Section. At minimum, submit operation and maintenance data for:

a. All equipment and systems.

b. Valves, gates, actuators, and related accessories.

c. Instrumentation and control devices.

d. Electrical gear.

3. For each operation and maintenance manual, submit the following:

a. Preliminary Submittal: Electronic copy of entire operation and maintenance manual, except for test data and service reports by Supplier.

b. Final Submittal: Printed and bound copy of complete operations and maintenance manual and electronic copy, including test data and service reports by Supplier.

1.02 ADMINISTRATIVE REQUIREMENTS

A. Quantity Required and Timing of Submittals:

1. Preliminary Submittal:

a. Printed Copies: None, except as may be required by Contractor.

b. Electronic Copies: One copy.

c. Submit to Engineer, whichever occurs first:

1) 60 days prior to starting training of operations and maintenance personnel.

2) 30 days prior to field quality control testing at the Site.

d. Furnish preliminary operation and maintenance data submittal in acceptable form and content, as determined by Engineer, before associated materials and equipment will be eligible for payment.

2. Preliminary Submittal shall be reviewed by Engineer. One electronic copy shall be returned to Contractor with required revisions noted.

3. Final Submittal: Provide 14 days prior to checkout and startup procedures specified in Section 01670 – Checkout and Startup Procedures, unless Submittal is specified as required prior to an interim Milestone.

a. Printed Copies: Two copies.

b. Electronic Copies: One copy.

B. Format of Printed Copies:

1. Binding and Cover:

a. Bind each operation and maintenance manual in durable, permanent, stiff-cover binder(s), comprising one or more volumes per copy as required. Binders shall be minimum one-inch wide and maximum of three-inch wide. Binders for each copy of each volume shall be identical.

b. Provide the following information on cover of each volume:

1) Title: “OPERATING AND MAINTENANCE INSTRUCTIONS”.

2) Name or type of material or equipment covered in the manual.

3) Volume number, if more than one volume is required, listed as “Volume __ of __”, with appropriate volume-designating numbers filled in.

4) Name of Project and, if applicable, Contract name and number.

5) Name of building or structure, as applicable.

c. Provide the following information on spine of each volume:

1) Title: “OPERATING AND MAINTENANCE INSTRUCTIONS”.

2) Name or type of material or equipment covered in the manual.

3) Volume number, if more than one volume is required, listed as “Volume __ of __”, with appropriate volume-designating numbers filled in.

4) Project name and building or structure name.

2. Drawings:

a. Bind into the manual drawings, diagrams, and illustrations up to and including 11 inches by 17 inches in size, with reinforcing.

b. Documents larger than 11 inches by 17 inches shall be folded and inserted into clear plastic pockets bound into the manual. Mark pockets with printed text indicating content and drawing numbers. Include no more than three drawing sheets per pocket.

3. Copy Quality and Document Clarity:

a. Contents shall be original-quality copies. Documents in the manual shall be either original manufacturer-printed documents or first-generation photocopies indistinguishable from originals. If original is in color, copies shall be in color.

b. Clearly mark in ink to indicate all components of materials and equipment on catalog pages for ease of identification. In standard or pre-printed documents, indicate options furnished or cross out inapplicable content.

4. Organization:

a. Provide table of contents in each volume for each chapter or section.

b. Use dividers and indexed tabs between major categories of information, such as operating instructions, preventive maintenance instructions, and other major subdivisions of data in each manual.

C. Format of Electronic Copies:

1. Each electronic copy shall include all information included in the corresponding printed copy.

2. Submit electronic copy via transferable method and format acceptable to Engineer.

3. File Format:

a. Acceptable formats include Adobe PDF, Microsoft Word, Autodesk DWF, AutoCAD DWG, and Microstation DGN.

b. Files shall be electronically searchable.

c. Submit separate file for each separate document in the printed copy.

d. Within each file, provide bookmarks for the following:

1) Each chapter and subsection listed in the corresponding printed copy document's table of contents.

2) Each figure.

3) Each table.

4) Each appendix.

4. Submit drawings and figures in one of the following formats: ".bmp", ".tif", ".jpg", ".gif", ".dwf", ".dwg", ".dgn".

D. General Content Requirements:

1. Prepare each operations and maintenance manual specifically for the Project. Include in each manual all pertinent instructions, as-built drawings as applicable, bills of materials, technical bulletins, installation and handling requirements, maintenance and repair instructions, and other information required for complete, accurate, and comprehensive data for safe and proper operation, maintenance, and repair of materials and equipment furnished for the Project. Include in manuals specific information required in the Specification Section for the material or equipment, data required by Laws and Regulations, and data required by authorities having jurisdiction.

2. Submit complete, detailed written operating instructions for each material or equipment item including: function; operating characteristics; limiting conditions; operating instructions for start-up, normal and emergency conditions; regulation and control; operational troubleshooting; and shutdown. Also include, as applicable, written descriptions of alarms generated by equipment and proper responses to such alarm conditions.

3. Submit written explanations of all safety considerations relating to operation and maintenance procedures.

4. Submit complete, detailed, written preventive maintenance instructions including all information and instructions to keep materials, equipment, and systems properly lubricated, adjusted, and maintained so that materials, equipment, and systems function economically throughout their expected service life. Instructions shall include:

a. Written explanations with illustrations for each preventive maintenance task such as inspection, adjustment, lubrication,

calibration, and cleaning. Include pre-startup checklists for each equipment item and maintenance requirements for long-term shutdowns.

b. Recommended schedule for each preventive maintenance task.

c. Lubrication charts indicating recommended types of lubricants, frequency of application or change, and where each lubricant is to be used or applied.

d. Table of alternative lubricants.

e. Troubleshooting instructions.

f. List of required maintenance tools and equipment.

5. Submit complete bills of material or parts lists for materials and equipment furnished. Lists or bills of material may be furnished on a per-drawing or per-equipment assembly basis. Bills of material shall indicate:

a. Manufacturer’s name, address, telephone number, fax number, and Internet website address.

b. Manufacturer’s local service representative’s or local parts supplier’s name, address, telephone number, fax number, Internet website address, and e-mail addresses, when applicable.

c. Manufacturer’s shop order and serial number(s) for materials, equipment or assembly furnished.

d. For each part or piece include the following information:

1) Parts cross-reference number. Cross-reference number shall be used to identify the part on assembly drawings, Shop Drawings, or other type of graphic illustration where the part is clearly shown or indicated.

2) Part name or description.

3) Manufacturer’s part number.

4) Quantity of each part used in each assembly.

5) Current unit price of the part at the time the operations and maintenance manual is submitted. Price list shall be dated.

6. Submit complete instructions for ordering replaceable parts, including reference numbers (such as shop order number or serial number).

7. Submit manufacturer's recommended inventory levels for spare parts, extra stock materials, and consumable supplies for the initial two years of operation. Consumable supplies are items consumed or worn by operation of materials or equipment, and items used in maintaining the operation of material or equipment, including items such as lubricants, seals, reagents, and testing chemicals used for calibrating or operating the equipment. Include estimated delivery times, shelf life limitations, and special storage requirements.

8. Submit manufacturer's installation and operation bulletins, diagrams, schematics, and equipment cutaways. Where materials pertain to multiple models or types, mark the literature to indicate specific material or equipment supplied. Marking may be in the form of checking, arrows, or underlining to indicate pertinent information, or by crossing out or other means of obliterating information that does not apply to the materials and equipment furnished.

9. Submit original-quality copies of each approved and accepted Shop Drawing, product data, and other submittal, updated to indicate as-installed condition. Reduced drawings are acceptable only if reduction is to not less than one-half original size and all lines, dimensions, lettering, and text are completely legible on the reduction.

10. Submit complete electrical schematics and wiring diagrams, including complete point-to-point wiring and wiring numbers or colors between all terminal points.

11. Submit copy of warranty bond and service contract as applicable.

12. When copyrighted material is used in operations and maintenance manuals, obtain copyright holder's written permission to use such material in the operation and maintenance manual.

1.03 SUBMITTALS

A. Action/Informational Submittals: Submit preliminary schedule (listing) of operations and maintenance data for Engineer's review. Preliminary operations and maintenance data shall be grouped as major equipment and material systems and divided into sub-systems as required for clarity, subject to Engineer's approval.

B. Closeout Submittals:

1. Operation and maintenance data: Submit the operations and maintenance data indicated in the Contract Documents, grouped into submittals as approved by Engineer.

PART 2 – PRODUCTS (NOT USED)

PART 3 – EXECUTION (NOT USED)

[END OF SECTION]

SECTION 01740

CLEANING AND WASTE MANAGEMENT

PART 1 – GENERAL

1.01 SUMMARY

A. Administrative and procedural requirements for progress and closeout cleaning at the Site.

1. Contractor shall execute cleaning during the Project, at completion of the Work, and as required by the General Conditions and this Section.

2. Maintain in a clean manner the Site, the Work, and areas adjacent to or affected by the Work.

B. Administrative and procedural requirements for disposing of non-hazardous excavation and construction waste.

1. Contractor shall comply with the requirements and procedures for construction waste management and disposal.

2. Extent of required construction waste management and disposal includes within the Project limits, as shown or indicated.

1.02 RELATED SECTIONS

A. Section 01045 – Execution of the Work.

1.03 REFERENCES

A. Definitions:

1. “Construction waste” is building and site improvement materials and other solid waste resulting from construction, remodeling, renovation, or repair operations. Construction waste includes packaging.

2. “Demolition waste” is building and site improvement materials resulting from demolition or selective demolition operations.

3. “Disposal” is removal to an off-Site location of demolition and construction waste and subsequent sale, recycling, reuse, or disposal in a landfill or incinerator conforming to Laws and Regulations and acceptable to authorities having jurisdiction.

B. Reference Standards: NFPA 241, Safeguarding Construction, Alteration, and Demolition Operations

1.04 ADMINSTRATIVE REQUIREMENTS

A. Failure of Contractor to Maintain Clean Site:

1. Owner will provide written notification to Contractor for failure to maintain a clean Site.

2. Written notification shall provide five (5) days for Contractor to remedy Site cleaning and waste management to the Engineer's and Owner's satisfaction.

3. Following the five (5) day remedy period, Owner shall without prejudice to any other rights provide services to clean Site to the satisfaction of Owner and Engineer. Contractor shall be responsible for reimbursement of Owner's costs and expenses for the cleaning work.

1.05 SUBMITTALS

A. Closeout Submittals:

1. Landfill and Incinerator Disposal Records: Provide copy of receipt and acceptance of waste by landfills and incinerator facilities licensed to accept them. Submit manifests, weight tickets, receipts, and invoices.

1.06 DELIVERY, STORAGE AND HANDLING

A. Replace loaded containers with empty containers as demand requires.

B. Deposit recyclable materials in containers free from debris.

C. Transport and deposit waste in containers to minimize dust. Close container covers immediately after materials are deposited.

PART 2 – PRODUCTS (NOT USED)

PART 3 – EXECUTION

3.01 PROGRESS CLEANING

A. General: Clean the Site, work areas, and other areas occupied by Contractor at least weekly. Dispose of materials in accordance with the General Conditions and the following:

1. Comply with NFPA 241 for removing combustible waste materials and debris.

2. Do not hold non-combustible materials at the Site more than three days if the temperature is expected to rise above 80 degrees F. When temperature is less

than 80 degrees F, dispose of non-combustible materials within seven days of their generation.

3. Provide suitable containers for storage of waste materials and debris.

4. Containerize hazardous and unsanitary waste materials separately from other waste. Mark containers appropriately.

B. Work Areas:

1. Clean areas where the Work is in progress to level of cleanliness necessary for proper execution of the Work.

2. Remove liquid spills promptly and immediately report spills to Owner, Engineer, and authorities having jurisdiction.

3. Where dust would impair proper execution of the Work, broom-clean or vacuum entire work area, as appropriate.

4. Concealed Spaces: Remove debris from concealed spaces before enclosing the space.

C. Installed Work: Keep installed Work clean. Clean installed surfaces according to written instructions of manufacturer or fabricator of material or equipment installed, using only cleaning agents and methods specifically recommended by material or equipment manufacturer. If manufacturer does not recommend specific cleaning agents or methods, use cleaning agents and methods that are not hazardous to health and property and that will not damage exposed surfaces.

D. Exposed Surfaces: Clean exposed surfaces and protect as necessary to ensure freedom from damage and deterioration until Substantial Completion.

E. Cutting and Patching:

1. Clean areas and spaces where cutting and patching are performed. Completely remove paint, mortar, oils, putty, and similar materials.

2. Thoroughly clean piping, conduit, and similar features before applying paint or other finishing materials. Restore damaged pipe covering to its original condition.

F. During handling and installation of materials and equipment, clean and protect construction in progress and adjoining materials and equipment already in place. Apply protective covering where required for protection from damage or deterioration, until Substantial Completion.

G. Clean completed construction as frequently as necessary throughout the construction period.

3.02 EXCAVATION WORK NEAR PUBLIC OR PRIVATE PROPERTY

A. Contractor shall provide cleaning and either temporary or permanent restoration where Work is located in or near streets, right of ways, easements, or private property.

B. Contractor shall backfill, compact, grade, and restore excavation or disturbed area to functional condition to permit pedestrian or vehicular traffic and original use of the area as the Work progresses.

C. Temporary storage of excavation spoils, including earth, stones, boulders, and debris, shall be removed from the Site or area of disturbance.

3.03 CLOSEOUT CLEANING

A. Complete the following prior to requesting inspection for Substantial Completion:

1. Clean and remove from the Site rubbish, waste material, debris, and other foreign substances.

2. Sweep paved areas broom-clean. Remove petrochemical spills, stains, and other foreign deposits.

3. Hose-clean sidewalks and loading areas.

4. Rake grounds that are neither planted nor paved to a smooth, even-textured surface.

5. Repair pavement, roads, sod, and other areas affected by construction operations and restore to specified condition; if condition is not specified, restore to pre-construction condition.

6. Clean exposed exterior and interior hard-surfaced finishes to dirt-free condition, free of spatter, grease, stains, fingerprints, films, and similar foreign substances.

7. Leave the Site clean, and in neat, orderly condition, satisfactory to Owner and Engineer.

3.04 WASTE DISPOSAL

A. General: Except for items or materials to be recycled, or otherwise reused, remove waste materials from the Site and properly dispose of waste in facility such as permitted landfill or incinerator or other method acceptable to authorities having jurisdiction.

1. Except as otherwise specified, remove from the Site all waste and debris from the Work as it accumulates. Upon completion of the Work, remove materials, equipment, waste, and debris and leave the Site clean, neat, and orderly. Comply with the Contract Documents regarding cleaning and removal of trash, debris, and waste.

2. Remove and transport debris in a manner that will prevent spillage on adjacent surfaces and areas.

3. Properly dispose of waste materials, surplus materials, debris, and rubbish off the Site.

4. Do not discharge volatile or hazardous substances, such as mineral spirits, oil, or paint thinner, into storm sewers or sanitary sewers.

5. Do not discharge wastes into surface waters or drainage routes.

B. Burying: Do not bury rubbish and waste materials at the Site.

C. Burning: Do not burn waste materials at the Site.

D. Disposal: Transport waste materials to proper location at site other than Owner's property for disposal in accordance with Laws and Regulations. Contractor shall be solely responsible for complying with Laws and Regulations regarding storing, transporting, and disposing of waste.

[END OF SECTION]

SECTION 01782

PROJECT RECORD DOCUMENTS

PART 1 – GENERAL

1.01 SUMMARY

A. Section Includes:

1. Requirements for recording changes to record documents.

2. Requirements for electronic files furnished by Engineer.

B. Contractor shall maintain and submit to Engineer with record documents in accordance with the Contract Documents.

1.02 ADMINSTRATIVE REQUIREMENTS

A. Maintenance of Record Documents:

1. The following record documents shall be maintained in the Contractor's field office:

a. Drawings, Specifications, and Addenda.

b. Shop Drawings, Samples, and other Contractor submittals, including records of test results, approved or accepted as applicable, by Engineer.

c. Change Orders, Field Orders, photographic documentation, survey data, and all other documents pertinent to the Work.

2. Update record documents on a monthly basis, minimum.

3. Provide files and racks for proper storage and easy access to record documents.

4. Make record documents available for inspection upon request of Engineer or Owner.

5. Do not use record documents for purpose other than serving as Project record. Do not remove record documents from Contractor's field office without Engineer's approval.

B. Submittal of Record Documents:

1. Submit to Engineer the following record documents: Drawings.

2. Prior to readiness for final payment, submit to Engineer one copy of final record documents. Submit complete record documents; do not make partial submittals.

3. Submit record documents with transmittal letter on contractor letterhead complying with letter of transmittal requirements in of the Contract Documents

4. Record documents submittal shall include certification, with original signature of official authorized to execute legal agreements on behalf of Contractor.

C. Electronic Files Furnished by Engineer:

1. CADD files will be furnished by Engineer upon the following conditions:

a. Contractor shall submit to Engineer a letter on Contractor letterhead requesting CADD files and providing specific definition(s) or description(s) of how files will be used, and specific description of benefits to Owner (including credit proposal, if applicable) if the request is granted.

b. Contractor shall execute Engineer's standard agreement for release of electronic files and shall abide by all provisions of the agreement for release of electronic files.

c. Layering system incorporated in CADD files shall be maintained as transmitted by Engineer. CADD files transmitted by Engineer containing cross-referenced files shall not be bound by Contractor. Drawing cross-references and paths shall be maintained. If Contractor alters layers or cross-reference files, Contractor shall restore all layers and cross-references prior to submitting record documents to Engineer.

d. Contractor shall submit record drawings to Engineer in same CADD format that files were furnished to Contractor.

1.03 SUBMITTALS

A. Closeout Submittals: Provide record documentation as specified in this Section.

PART 2 – PRODUCTS (NOT USED)

PART 3 – EXECUTION

3.01 GENERAL REQUIREMENTS

A. At the start of the Project, label each record document to be submitted as, "PROJECT RECORD" using legible, printed letters. Letters on record copy of the Drawings shall be two inches high.

B. Keep record documents current. Make entries on record documents within two working days of receipt of information required to record the change.

C. Do not permanently conceal the Work until required information has been recorded.

D. Accuracy of record documents shall be such that future searches for items shown on the record documents may rely reasonably on information obtained from Engineer-accepted record documents.

E. Marking of Entries:

1. Use erasable, colored pencils (not ink or indelible pencil) for marking changes, revisions, additions, and deletions to record documents.

2. Clearly describe the change by graphic line and make notations as required. Use straight-edge to mark straight lines. Writing shall be legible and sufficiently dark to allow scanning of record documents into legible electronic files.

3. Date all entries on record documents.

4. Call attention to changes by drawing a “cloud” around the change(s) indicated.

5. Mark initial revisions in red. In the event of overlapping changes, use different colors for subsequent changes.

3.02 RECORDING CHANGES TO DRAWINGS

A. Record changes on copy of the Drawings. Submittal of Contractor-originated or -produced drawings as a substitute for recording changes on the Drawings is unacceptable.

B. Record changes on plans, sections, schematics, and details as required for clarity, making reference dimensions and elevations (to Project datum) for complete record documentation.

C. Record actual construction including:

1. Depths of various elements of foundation relative to Project datum.

2. Field changes of dimensions, arrangements, and details.

3. Changes made in accordance with Change Orders and Field Orders.

4. Changes in details on the Drawings. Submit additional details prepared by Contractor when required to document changes.

3.03 RECORDING CHANGES FOR SCHEMATIC LAYOUTS

A. In some cases, on the Drawings, arrangements of conduits, circuits, piping, ducts, and similar items are shown schematically and are not intended to portray physical layout. For such cases, the final physical arrangement shall be determined by Contractor subject to acceptance by Engineer.

B. Record on record documents all revisions to schematics on Drawings, including: piping schematics, ducting schematics, process and instrumentation diagrams, control and circuitry diagrams, electrical one-line diagrams, motor control center layouts, and other schematics when included in the Contract. Record actual locations of equipment, lighting fixtures, in-place grounding system, and other pertinent data.

C. When dimensioned plans and dimensioned sections on the Drawings show the Work schematically, indicate on the record documents, by dimensions accurate to within one inch in the field, centerline location of items of Work such as conduit, piping, ducts, and similar items

1. Clearly identify the Work item by accurate notations such as “cast iron drain”, “rigid electrical conduit”, “copper waterline”, and similar descriptions.

2. Show by symbol or note the vertical location of Work item; for example, “embedded in slab”, “under slab”, “in ceiling plenum”, “exposed”, and similar designations. For piping not embedded, also provide elevation dimension relative to Project datum.

3. Descriptions shall be sufficiently detailed to be related to Specifications.

D. Engineer may furnish written waiver of requirements relative to schematic layouts shown on plans and sections when, in Engineer’s judgment, dimensioned layouts of Work shown schematically will serve no useful purpose. Do not rely on waiver(s) being issued.

3.04 REQUIREMENTS FOR SUPPLEMENTAL DRAWINGS

A. In some cases, drawings produced during construction by Engineer or Contractor supplement the Drawings and shall be included with record documents submitted by Contractor. Supplemental record drawings shall include drawings provided with Change Orders and Field Orders and that cannot be incorporated into the Drawings due to space limitations.

B. Supplemental drawings provided with record drawings shall be integrated with the Drawings and include necessary cross-references between drawings. Supplemental record drawings shall be on sheets the same size as the Drawings.

C. When supplemental drawings developed by Contractor using computer-aided drafting/design (CADD) software are to be included in record drawings, submit electronic files for such drawings as part of record drawing submittal.

3.05 RECORDING CHANGES TO SPECIFICATIONS AND ADDENDA

A. Mark each Section to record:

1. Manufacturer, trade name, catalog number, and Supplier of each product and item of equipment actually provided.

2. Changes made by Addendum, Change Orders, and Field Orders.

[END OF SECTION]

SECTION 01783

SPARE PARTS AND EXTRA MATERIAL

PART 1 – GENERAL

1.01 SUMMARY

A. Contractor shall furnish spare parts data and extra materials for materials and equipment in accordance with the Contract Documents.

B. Spare Parts and Extra Materials:

1. Provide spare parts, extra stock materials, maintenance supplies, and special tools required for maintenance (“spare parts and extra materials”) for one year of operation (unless otherwise specified in the individual Specification Section).

a. Provide Supplier recommended lubricating oil and grease in accordance with this Section and the Contract Documents.

2. Provide list of Supplier recommended spare parts and extra material.

a. Include list of four standard lubricants, minimum, that shall be interchangeable for each type of lubricant required in the Contract Documents.

b. Include unit prices in current United States dollars.

c. Source(s) of supply for each.

C. Packaging and Labeling:

1. Furnish spare parts and extra materials in manufacturer’s unopened cartons, boxes, crates, or other original, protective covering suitable for preventing corrosion and deterioration for maximum length of storage normally anticipated by manufacturer.

2. Packaging of spare parts and extra materials shall be clearly marked and identified with name of manufacturer, applicable equipment, part number, part description, and part location in the equipment.

3. Protect and package spare parts and extra materials for maximum shelf life normally anticipated by manufacturer.

D. Finishes: Spare parts and extra material shall have painting, protective coating, and finishes identical to original installed equipment and material. Where painting, protective coating, or finishes are not specified, suitable provisions shall be furnished to protect from corrosion.

E. Special Tools: Contractor shall provide special tools necessary to operate, disassemble, service, repair, and adjust equipment and material in accordance with the manufacturer's operation and maintenance manual. Special tool requirements shall be the same as spare parts and extra material specified in this Section.

F. Storage Prior to Delivery to Owner: Prior to furnishing spare parts and extra materials to Owner, store spare parts and extra materials in accordance with the Contract Documents and manufacturers' recommendations.

G. Delivery Time and Eligibility for Payment:

1. Deliver to Owner spare parts and extra materials prior to date of Substantial Completion for equipment or system associated with the spare parts and extra materials. Do not deliver spare parts and extra materials before commencing start-up for associated equipment or system.

2. Spare parts and extra materials are not eligible for payment until delivered to Owner and Contractor's receipt of Owner's countersignature on letter of transmittal.

H. Procedure for Delivery to Owner:

1. Deliver spare parts and extra materials to Owner's permanent storage rooms at the Site or area(s) at the Site designated by Owner.

2. When spare parts and extra materials are delivered, Engineer and Owner will mutually inventory the spare parts and extra materials delivered to verify compliance with the Contract Documents regarding quantity and part numbers.

3. Additional procedures for delivering spare parts and extra materials to Owner, if required, will be developed by Engineer and complied with by Contractor.

I. Transfer Documentation:

1. Furnish on Contractor letterhead a letter of transmittal for spare parts and extra materials furnished under each Specification Section. Letter of transmittal shall accompany spare parts and extra materials. Do not furnish letter of transmittal separate from associated spare parts and extra materials.

2. Furnish three original, identical, signed letters of transmittal for each Specification Section. Upon delivery of specified quantities and types of spare parts and extra materials to Owner, designated person from Owner will countersign each original letter of transmittal indicating Owner's receipt of spare parts and extra materials.

a. Owner will retain one fully signed original.

b. Contractor shall submit one fully signed original to Engineer.

c. Contractor shall retain one fully signed original for Contractor's file.

3. Letter of transmittal shall include the following:

a. Information required by Contract Documents for submittal of letters of transmittal.

b. Transmittal shall list spare parts and extra materials furnished under each Specification Section. List each individual part or product and quantity furnished.

c. Provide space for countersignature by Owner as follows: space for signature, space for printed name, and date.

J. Contractor shall be fully responsible for loss or damage to spare parts and extra materials until spare parts and extra materials are received by Owner.

1.02 SUBMITTALS

A. Action/Informational Submittals: Individual Specification Sections that require spare parts, extra material, or tools, Contractor shall submit inventory checklist for each individual Specification Section that includes the following information:

1. Specification Section number and title.

2. Name of spare parts, extra material, or tools.

3. Manufacturer, part number and description.

4. Quantity specified and furnished.

PART 2 – PRODUCTS (NOT USED)

PART 3 – EXECUTION (NOT USED)

[END OF SECTION]

SECTION 01821

INSTRUCTION OF OWNER'S PERSONNEL

PART 1 – GENERAL

1.01 SUMMARY

A. Contractor shall furnish services of operation and maintenance training specialists to instruct Owner's personnel in recommended operation and maintenance procedures for materials and equipment furnished, in accordance with the Contract Documents.

B. Contractor shall provide a combination of classroom and field training at the Site, unless otherwise required elsewhere in the Contract Documents.

C. Owner reserves the right to record training sessions on video for Owner's later use in instructing Owner's personnel.

1.02 ADMINISTRATIVE REQUIREMENTS

A. Definitions:

1. Training -Manufacturer's verbal, visual, and written presentation of materials to Owner's staff to ensure that any Owner personnel undergoing training understand the Manufacturer's recommended procedures to properly operate and maintain the equipment and systems for the expected service life.

B. Qualifications:

1. Contractor's instructors shall be factory-trained by manufacturer of material or equipment.

2. Contractor's instructors shall be proficient and experienced in conducting training of type required.

3. Qualifications of instructors are subject to acceptance by Engineer. If Engineer does not accept qualifications of proposed instructor, furnish services of replacement instructor with acceptable qualifications.

C. Scheduling:

1. General:

a. Contractor shall coordinate training services with start-up and initial operation of materials and equipment on days and times, and in manner, acceptable to Owner, in accordance with the Contract Documents.

b. Training may be required outside of normal business hours to accommodate schedules of operations and maintenance personnel. Furnish training services at the required days and times at no additional cost to Owner.

c. Prerequisites to Training: Training of Owner's personnel shall commence after acceptable preliminary operation and maintenance data has been submitted and work required in Section 01670 – Checkout and Startup Procedures is complete.

2. Training Schedule Submittal:

a. Training Schedule Required: Contractor shall prepare and submit proposed training schedule for review and acceptance by Engineer and Owner. Proposed training schedule shall show all training required in the Contract Documents, and shall demonstrate compliance with specified training requirements relative to number of hours of training, number of training sessions, and scheduling.

b. Timing of Training Schedule Submittal: Submit initial training schedule at least thirty days before scheduled start of first training session. Submit final training schedule, incorporating revisions in accordance with Engineer's comments, no later than seven days prior to starting the first training session.

c. Owner reserved the right to modify personnel availability for training in accordance with process or emergency needs at the Site.

1.03 TRAINING REQUIREMENTS

A. General Lesson Plan Requirements:

1. Contractor's lesson plan shall describe specific instruction topics, system components for which training will be furnished, and training procedures. Handouts, if any, to be used in training shall be included with the lesson plan. Describe in lesson plan "hands-on" demonstrations planned for training sessions.

2. Submit acceptable lesson plan 7 days prior to starting associated training.

3. Lesson plan shall include estimated duration of each training segment.

B. Specific Lesson Plans Requirements:

1. Equipment overview shall cover the following:

a. Equipment's operating (process) function, performance objectives, and fundamental operating principles.

b. Equipment's mechanical, electrical, and electronic components and features. Group related components into subsystems and describe function of subsystem and subsystem's interaction with other subsystems.

c. Support equipment and appurtenances.

d. Safety and potential hazards.

e. Safety and control interlocks.

2. Operations personnel training shall cover the following:

a. Equipment overview: As described in this Section.

b. Operation:

1) Principles, operating, start-up, and shutdown procedures.

2) Abnormal or emergency start-up, operating, and shutdown procedures.

3) Alarm conditions and responses.

4) Monitoring and recordkeeping.

5) Housekeeping.

c. Troubleshooting: Required corrective maintenance or an operating parameter adjustment.

3. Maintenance personnel training:

a. Equipment overview: As described in this Section.

b. Equipment preventive maintenance:

1) Inspection procedures:

a) Operation.

b) Trouble symptoms and anticipate breakdowns.

c) Predictive maintenance.

2) Preventative maintenance intervals.

3) Lubricant and replacement parts.

4) Cleaning practices and intervals.

5) Special tools required.

6) Removal, installation, and disassembly and assembly procedures.

7) “Hands-on” demonstrations of preventive maintenance procedures.

8) Measuring instruments and procedures.

9) Torqueing, mounting, calibrating, and aligning procedures and settings requirements.

10) Check and test equipment following corrective maintenance.

4. Equipment Troubleshooting:

a. Systematic troubleshooting procedures.

b. Checklists.

c. Testing and diagnostic procedures.

d. Corrective maintenance procedures with “hands on” demonstrations.

C. Training Aids:

1. Contractor’s instructor shall incorporate training aids as appropriate to assist in the instruction. Provide handouts of text, tables, graphs, and illustrations as required. Other appropriate training aids include:

a. Audio-visual aids.

b. Equipment cutaways and samples.

c. Tools, including special tools.

2. Podium presentation aids: Presentation shall cover equipment, products and materials provided. Provide electronic version of presentation material to Engineer.

a. Electronic version of presentation aids shall be Microsoft PowerPoint or equivalent format.

b. Presentation shall include the following sections:

1) Complete system overview including, but not limited to, related and associated equipment specific to the system.

2) Specific equipment requirements and how equipment functions within the overall system.

3) Site specific system and equipment requirements.

c. Hardcopy handouts of the electronic presentation aids shall be provided prior to each training section for review during podium presentation.

3. Handouts:

a. Contractor's instructor shall distribute and use descriptive handouts during training.

b. Handouts should be coordinated with the instruction

c. Provide at least ten copies of handouts for each training session

4. Audio-visual Equipment: Training provider shall provide audio-visual equipment required for training sessions.

1.04 SUBMITTALS

A. Action/Informational Submittals:

1. Training Schedule: Detailed schedule of training sessions, demonstrating compliance with number of training sessions, hours required in the Contract Documents, and complying with the Contract Times. Submit training schedule submittals in accordance with timeframes specified in this Section.

2. Lesson Plan: Acceptable lesson plan for training on each material or equipment item, in accordance with the Contract Documents. Lesson plan shall comply with requirements of this Section. Include with lesson plan copy of handouts that will be used during training sessions. Provide lesson plan submittals in accordance with timeframes specified in this Section.

3. Podium presentation material, electronic version.

B. Closeout Submittals:

1. Trainee sign-in sheet for each training session. Submit to Owner's training coordinator.

C. Quality Assurance Submittals:

1. Qualifications: Credentials of Contractor's proposed operations and maintenance instructor(s). Credentials shall demonstrate compliance with requirements of this Section and shall include brief resume' and specific details of instructor's operating, maintenance, and training experience relative to the specific material and equipment for which instructor will provide training.

PART 2 – PRODUCTS (NOT USED)

PART 3 – EXECUTION

3.01 "HANDS-ON" DEMONSTRATIONS

A. Contractor's instructor shall provide "hands-on" demonstration of operations and maintenance of equipment and materials for each training session.

B. Contractor shall furnish tools and appurtenances required for demonstrations.

3.02 SCHEDULE

A. Contractor shall furnish the hours of training and number of sessions indicated in the individual specifications, at a minimum. Travel time and expenses are the responsibility of the manufacturer and are excluded from required training time indicated in the Contract Documents.

B. Training shall be scheduled during day shift, normal working hours unless otherwise approved by Owner or Engineer.

C. Training shall be provided for a minimum of two identical sessions, unless otherwise specified, with each session scheduled for different weeks.

[END OF SECTION]

SECTION 02010

SUBSURFACE INVESTIGATION

PART 1 – GENERAL

1.01 RESPONSIBILITY

A. If subsurface explorations have been performed, copies of the results will be made available for informational purposes only. These test boring logs and geotechnical reports are not part of the Contract Documents.

B. Subsurface information was obtained primarily for use in preparing foundation design. The Contractor may draw his own conclusions therefrom. No responsibility is assumed by the Owner for subsoil quality or condition. No claim for extra compensation or extension of time will be allowed on account of subsurface conditions inconsistent with the data shown.

C. Such information and data are not intended as a representation or warranty of continuity of conditions between soil borings or test pits, nor of groundwater levels at dates and times other than date and time when measured, nor that purpose of obtaining the information and data were appropriate for use by Contractor. Owner will not be responsible for interpretations or conclusions drawn therefrom by Contractor.

D. Soil borings and other exploratory operations may be made by Contractor, at no additional cost to Owner. Coordinate Contractor-performed test borings and other exploratory operations with Owner and utility owners as appropriate. Perform such explorations without disrupting or otherwise adversely affecting operations of Owner or utility owners. Comply with Laws and Regulations relative to required notifications.

PART 2 – PRODUCTS

2.01 SOIL BORINGS

A. Copies of the following, where available, will be made available for informational purposes only:

1. Geotechnical engineering report(s).

2. Soil boring log(s).

PART 3 – EXECUTION (NOT USED)

[END OF SECTION]

SECTION 02050

DEMOLITION

PART 1 – GENERAL

1.01 WORK INCLUDED

A. Demolish designated structures.

B. Remove materials from the site.

C. Remove foundations.

D. Remove underground tanks and piping, unless noted otherwise.

E. Disconnect, cap, remove, and identify utilities.

1.02 RELATED WORK

A. Section 01510 – Temporary Utilities.

B. Section 01560 - Temporary Controls.

C. Section 02100 - Clearing and Grubbing.

1.03 SUBMITTALS

A. Submit demolition and removal procedures and schedule under provisions of General Conditions.

B. Demolition and Removal Plan: Not less than ten days prior to starting demolition Work, submit acceptable plan for demolition and removal Work, including:

1. Plan for coordinating shut-offs, capping, temporary services, and continuing utility services.

2. Other proposed procedures as applicable.

3. Equipment proposed for use in demolition operations.

4. Recycling/disposal facility(ies) proposed, including facility owner, facility name, location, and processes. Include copy of appropriate permits and licenses, and compliance status.

5. Planned demolition operating sequences.

6. Detailed schedule of demolition Work in accordance with the accepted Project Schedule.

C. Copies of all photographs and other records from the joint existing conditions surveys.

D. Submit notification of intended demolition start in writing at least 48 hours prior to commencing demolition or removal. Do not start removals without permission of Owner.

1.04 EXISTING CONDITIONS

A. Conduct demolition to minimize interference with adjacent structures.

B. Provide, erect, and maintain temporary barriers and security devices.

C. Conduct operations with minimum interference to public or private thoroughfares. Maintain a protected egress and access at all times.

D. The Owner does not assume responsibility for the actual condition of structures and equipment to be demolished and removed.

E. Conditions existing at the time of inspection for bidding purposes will be maintained by the Owner so far as practicable.

F. The information regarding the existing structures and equipment shown on the Drawings is based on visual inspection and a walkthrough survey only. The Owner will not be responsible for interpretations or conclusions drawn therefrom by the Contractor.

1.05 TITLE TO EQUIPMENT AND MATERIALS

A. Contractor shall have no right or title to any of the equipment, materials, or other items to be removed from the existing buildings or structures unless and until said equipment, materials, and other items have been removed from the premises. The Contractor shall not sell or assign or attempt to sell or assign any interest in the said equipment, materials, or other items until the said equipment, materials, or other items have been removed.

B. Contractor shall have no claim against the Owner because of the absence of such fixtures and materials.

PART 2 – PRODUCTS (NOT USED)

PART 3 – EXECUTION

3.01 PREPARATIONS

A. Prevent movement or settlement of adjacent structures. Provide bracing and shoring.

B. Protect existing landscaping materials, appurtenances, structures, which are not to be demolished.

C. Disconnect, remove, and cap designated utility lines within demolition areas.

D. Mark location of disconnected utilities. Identify utilities and indicate capping locations on Project Record Documents.

E. Prior to the execution of the work, the Contractor and Owner shall jointly survey the condition of the adjoining and/or nearby pavements and structures. Photographs and records shall be made of any prior settlement or cracking of structures, pavements, and the like, that may become the subject of possible damage claims. Contractor shall provide Owner a copy of all records of the joint survey of conditions before demolition activities may begin. Contractor shall provide copies of the existing conditions survey report to the Owner before any demolition or construction activities begin.

3.02 PROTECTION

A. Demolition and removal work shall be performed by competent experienced workmen for the various type of demolition and removal work and shall be carried out through to completion with due regard to the safety of Owner employees, workmen on site and the public. The work shall be performed with as little nuisance as possible.

B. The work shall comply with the applicable provisions and recommendation of OSHA all governing codes, and as hereinafter specified.

C. The Contractor shall make such investigations, explorations, and probes as are necessary to ascertain any required protective measures before proceeding with demolition and removal. The Contractor shall give particular attention to shoring and bracing requirements to prevent any damage to new or existing construction.

D. The Contractor shall provide, erect, and maintain catch platforms, lights, barriers, weather protection, warning signs and other items as required for proper protection of the public, occupants of the building, workmen engaged in demolition operations, and adjacent construction.

E. The Contractor shall provide and maintain weather protection at exterior openings to fully protect the interior premises against damage from the elements until such openings are closed by new construction.

F. The Contractor shall provide and maintain temporary protection of the existing structure designated to remain where demolition, removal and new work is being done, connections made, materials handled, or equipment moved.

G. The Contractor shall take necessary precautions to prevent dust from rising by wetting demolished masonry, concrete, plaster, and similar debris. Unaltered portions of the existing buildings affected by the operations under this Section shall be protected by dust proof partitions and other adequate means.

H. The Contractor shall provide adequate fire protection in accordance with local Fire Department requirements.

I. The Contractor shall not close or obstruct walkways, passageways, or stairways and shall not store or place materials in passageways, stairs, or other means of egress. The Contractor shall conduct operations with minimum traffic interference.

J. The Contractor shall be responsible for any damage to the existing structure or contents by reason of the insufficiency of protection provided.

K. When structures are adjacent to demolition activities, before commencing demolition, provide surveyed elevation benchmarks on structure at locations directed by Engineer. Record and report the elevation of each benchmark after demolition and at least once a day while demolition is in progress. Should benchmark readings indicate displacement, halt demolition activities until corrective action is provided acceptable to Engineer.

3.03 DEMOLITION

A. Demolish indicated structures and appurtenances in an orderly and careful manner, and in

accordance with staging requirements.

B. Work shall be performed in such manner as not to endanger the safety of the workmen or the public or cause damage to nearby structures. Cease operations and notify the Engineer immediately if adjacent structures appear to be endangered. Do not resume operations until corrective measures have been taken.

C. Except where noted otherwise, immediately remove demolished material from site.

D. Remove salvage materials to be re-installed or retained in a manner that prevents damage. Store and protect.

E. Remove and promptly dispose of contaminated, vermin infested, or dangerous materials encountered.

F. Remove foundation walls and footings to a minimum two feet below finished grade.

G. Remove concrete slabs on grade in their entirety.

H. Backfill excavated areas, open pits, and holes caused as a result of demolition. Excavation caused by demolition shall be backfilled with fill free from rubbish and debris.

I. Keep work sprinkled to minimize dust. Provide hoses and watermain or hydrant connections for this purpose.

J. Rough grade and compact areas affected by demolition to maintain site grades and contours.

K. Remove demolished materials from site as work progresses. Leave site in clean condition.

L. Where parts of existing pavements or structures are to remain in service, demolish the portions to be removed, repair damage, and leave the pavement or structure in proper condition for the intended use. Remove asphalt or concrete pavement, concrete, and masonry to the lines designated by saw-cutting, drilling, chipping, or other suitable methods. Leave the resulting surfaces reasonably true and even, with sharp straight corners that will result in neat joints with new construction and be satisfactory for the purpose intended. Where existing reinforcing rods are to extend into new construction, remove the concrete so that the reinforcing is clean and undamaged. Cut off other reinforcing 1/2-inch below the surface and fill with epoxy resin binder flush with the surface.

M. Wherever piping is to be removed for disposition, the piping shall be drained by the Contractor and adjacent pipe and headers that are to remain in service shall be blanked off or plugged and then anchored in an approved manner.

N. The Contractor shall remove temporary work, such as enclosures, signs, guards, and the like when such temporary work is no longer required or when directed at the completion of the work.

3.04 DISPOSAL

A. All debris resulting from the demolition and removal work shall be disposed of by the Contractor at a properly permitted facility as part of the work of this Contract. Material designated to be salvaged shall be stored on the construction site as directed. All other

material shall be disposed of off-site by the Contractor at his expense.

B. Burning or burying of any debris resulting from the demolition will not be permitted at the site.

3.05 MAINTENANCE

A. The Contractor shall maintain the buildings, structures, and public properties free from accumulations of waste, debris, and rubbish, caused by the demolition and removal operations.

B. The Contractor shall provide on-site dump containers for collection of waste materials, debris, and rubbish, and he shall wet down dry materials to lay down and prevent blowing dust.

C. At reasonable intervals during the progress of the demolition and removal work or as directed by the Engineer, the Contractor shall clean the site and properties, and dispose of waste materials, debris, and rubbish.

3.06 SALVAGE ITEMS

A. Materials and equipment to remain Owner's property shall be carefully removed and appropriately handled by Contractor to avoid damage and invalidation of warranties in effect, and shall be cleaned and stored at the Site (or other site specified in the Contract Documents) at place designated by Engineer or Owner.

[END OF SECTION]

SECTION 02064

MODIFICATIONS TO EXISTING STRUCTURES AND EQUIPMENT

PART 1 – GENERAL

1.01 SCOPE OF WORK

A. Furnish all labor, materials, equipment, and incidentals required to modify, alter, and/or convert existing equipment, structures, piping, and appurtenances as shown or specified, and as required for the installation of new equipment, structures, piping, and appurtenances.

PART 2 – PRODUCTS (NOT USED)

PART 3 – EXECUTION

3.01 GENERAL

A. The Contractor shall cut, repair, reuse, excavate, demolish, or otherwise remove parts of the existing structures or appurtenances, as indicated on the Contract Drawings, herein specified, or necessary to permit completion of the work under this Contract. Dispose of surplus materials resulting from the above work in an approved manner, in accordance with the Contract Documents, and at no additional cost to the Owner. The Work shall include all necessary cutting and bending of reinforcing steel, structural steel, or miscellaneous metal work found embedded in the existing structures.

B. At the time that a new connection is made to an existing equipment unit, control panel, or structure new work shall be installed to the limits shown on the Drawings, or as specified herein.

C. No existing structure, equipment, piping, or appurtenance shall be shifted, cut, removed, or otherwise altered except as shown on the Drawings, as specified herein, or approved by Owner in writing.

D. When removing materials or constructing openings in structures, the Contractor shall take all precautions and use all necessary barriers and other protective devices so as not to damage the structures beyond the limits necessary for the new Work.

E. Materials and equipment that are removed to accommodate the modifications to existing structures and equipment shall remain the property of the Owner. However, items that are not salvageable, as determined by the Owner, shall become the property of the Contractor to be disposed of offsite.

F. All alterations to existing equipment and structures shall be done at such time and in such manner that complies with the project schedule. Prior to execution of the Work, all tools, equipment, and materials shall be onsite, assembled, and made ready so that the Work can be completed without delay.

G. All cutting of existing material shall be done in a manner that provides suitable bonding for the new Work.

H. Where necessary or required for the purpose of making connections, the Contractor shall cut existing pipelines in a manner to provide an approved joint. Provide flanges or couplings, as

required.

I. Provide caps, plugs, bulkheads, or other means to provide isolation and flow control in the performance of the Work under this Contract.

J. Blasting will not be permitted to complete any work under this Contract. Care shall be taken not to damage any part of existing buildings or foundations or outside structures.

K. The Contractor shall cut out embedded anchorage and attachment items as required to properly provide for patching and repair of the respective finishes.

L. All supports, pedestals, and anchors shall be removed with the equipment and piping unless otherwise specified or required. Concrete bases, anchor bolts and other supports shall be removed to approximately 1 inch below the surrounding finished area and the recesses shall be patched to match the adjacent areas. Superstructure wall and roof openings shall be closed, and damaged surfaces shall be patched to match the adjacent areas, as specified under applicable Sections of these Specifications, as shown on the Drawings, or as directed by the Owner. Wall sleeves and castings shall be plugged or blanked off, all openings in concrete shall be closed in a manner meeting the requirements of the appropriate Sections of these Specifications, as shown on the Drawings, and as directed and approved by the Owner.

M. Where alterations occur, or new and old work join, the Contractor shall cut, remove, patch, repair, or refinish the adjacent surfaces to the extent required by the construction conditions, to leave the altered work in as good a condition as existed prior to the start of the work. The materials and workmanship employed in the alterations, unless otherwise shown on the Drawing or specified, shall comply with that of the various respective trades which normally perform the particular items of work.

N. The Contractor shall finish adjacent existing surfaces to new work to match the specified finish for new work. The Contractor shall clean existing surfaces of dirt, grease, loose paint, etc., before refinishing.

3.02 CLEANING EXISTING STRUCTURES

A. Before commencing work on any structures, the Contractor shall prepare the Work surfaces by removing and disposing of all liquid, wastewater, settled solids, and debris from within structures.

3.03 CONNECTING TO EXISTING EQUIPMENT AND STRUCTURES

A. The Contractor shall field verify the properties of existing equipment and structures prior to making the connections indicated in the Drawings. The verifications shall be performed with adequate time to correct any potential alignment or other problems prior to the actual time of connection.

[END OF SECTION]

SECTION 02100

CLEARING AND GRUBBING

PART 1 – GENERAL

1.01 SCOPE OF WORK

A. The Work to be performed shall include the clearing and grubbing of the area of Work designated on the Drawings.

B. Clearing shall consist of the cutting, removal, and clearing of the surface of all trees (except for those marked to remain), stumps, bushes, logs, down timber, hedges, snags, brush, undergrowth, grass and weeds, and other encumbrances or loose or projecting material including fences, structures, debris, rubbish from within the limits of disturbance indicated on the Drawings. The grubbing of stumps, roots, foundations shall be required.

C. Principal items of work also include:

1. Notifying all authorities owning utility lines running to or on the property. Protecting and maintaining all utility lines to remain and capping those that are not required in accordance with instructions of the utility companies, and all other authorities having jurisdiction.

2. Barricading and protecting all trees, shrubs, lawns and the like within areas to be preserved. Relocating trees and shrubs, so indicated on the Drawings, to designated areas.

3. Repairing all injury to trees, shrubs, and other plants caused by site preparation operations. Work shall be completed under the direction of a Certified and Licensed Arborist or Landscape Architect.

4. Removing topsoil to its full depth from designated areas and stockpiling on site for future use.

5. Disposing from the site all debris resulting from work under this Section.

1.02 REFERENCES

A. Florida Department of Transportation Standard Specifications for Road and Bridge Construction (F.D.O.T.) latest edition.

1.03 STREET AND ROAD BLOCKAGE

A. Closing of streets and roads during progress of the Work shall be in compliance with the requirements of the Owner and other authorities having jurisdiction. Access shall be provided to all facilities remaining in operation.

1.04 PROTECTION OF PERSONS AND PROPERTY

A. All Work shall be performed in such a manner to protect all personnel, workmen, pedestrians, and adjacent property and structures from possible injury and damage.

B. All conduits, wires, cables, and appurtenances above or below ground shall be protected from damage.

C. Provide warning and barrier fence where shown on the Drawings and as specified herein.

PART 2 – PRODUCTS

2.01 MATERIALS FOR PLACEMENT

A. All materials required to be brought on to the site for filling of holes caused by grubbing or otherwise shall be consistent with materials of the surrounding area.

PART 3 – EXECUTION

3.01 SCHEDULE

A. Contractor shall schedule the clearing and grubbing work in advance of the Work and in coordination with the Owner.

3.02 SPOIL MATERIALS REMOVAL

A. All spoil materials shall be removed from the Site and disposed of by Contractor.

3.03 CLEARING

A. Clear the area of all objectionable materials. Limbs of trees scheduled for removal that fall outside of the limits of disturbance shall be removed and disposed of in a satisfactory manner. Preserve and protect from injury all trees not scheduled for removal.

B. The area shall be cut to a height of not more than 12 inches above the ground surface. The grubbing of stumps and roots will be required.

C. Fences shall be removed and disposed of when directed by Owner. Fence wire shall be neatly rolled and the wire and posts stored on the project if they are to be used again, or stored at a designated location if the fence is to remain the property of Owner.

D. Before removal of topsoil, and start of excavation and grading operations, the areas within the clearing limits shall be cleared and grubbed.

E. Clearing shall consist of cutting, removal, and satisfactory disposal of all trees, fallen timber, brush, bushes, rubbish, sanitary landfill material, fencing, and other perishable and objectionable material within the areas to be excavated or other designated areas. Prior to the start of construction, the Contractor shall survey the entire Contract site and shall prepare a plan which defines the areas to be cleared and grubbed, trees to be pruned, extent of tree pruning, and/or areas which are to be cleared but not grubbed. This plan shall be submitted to the Owner for approval. Should it become necessary to remove a tree, bush, brush, or other plants adjacent to the area to be excavated, the Contractor shall do so only after permission has been granted by the Owner.

F. Excavation resulting from the removal of trees, roots and the like shall be filled with suitable material, as approved by the Engineer, and thoroughly compacted in accordance with Section 02200 - Earthwork.

G. Unless otherwise shown or specified, the Contractor shall clear and grub a strip at least 15 ft. wide along all permanent fence lines installed under this Contract.

H. In temporary construction easement locations, only those trees and shrubs shall be removed which are in actual interference with excavation or grading work under this Contract, and removal shall be subject to approval by the Owner. However, the Owner reserves the right to order additional trees and shrubs removed at no additional cost to the Owner, if such, in his opinion, are too close to the Work to be maintained or have become damaged due to the Contractor's operations.

3.04 STRIPPING AND STOCKPILING EXISTING TOPSOIL

A. Existing topsoil and sod on the site within areas designated on the Drawings shall be stripped to whatever depth it may occur and stored in locations designated by the Owner.

B. The topsoil shall be free of stones, roots, brush, rubbish, or other unsuitable materials before stockpiling the topsoil.

C. Care shall be taken not to contaminate the stockpiled topsoil with any unsuitable materials.

3.05 GRUBBING

A. Grubbing shall consist of the removal and disposal of all stumps, roots, logs, sticks and other perishable materials to a depth of at least 6 inches below ground surfaces.

B. Large stumps located in areas to be excavated may be removed during grading operations, subject to the approval of the Owner.

C. All holes remaining after the grubbing operation in embankment areas shall have the sides broken down to flatten out the slopes, and shall be filled with acceptable material, moistened and properly compacted in layers to the density required. The same construction procedure shall be applied to all holes remaining after grubbing in excavation areas where the depth of holes exceeds the depth of the proposed excavation.

3.06 DISPOSAL OF MATERIAL

A. All debris resulting from the clearing and grubbing work shall be disposed of by the Contractor as part of the work of this Contract. Material designated to be salvaged shall be stored on the construction site as directed for reuse in this Project or removal by others.

B. Burning of any debris resulting from the clearing and grubbing work will not be permitted at the site.

3.07 WARNING AND TREE PROTECTION BARRIER FENCE

A. Tree protection barriers shall be as detailed in the City of Largo Engineering Design and Construction Standards (latest edition).

[END OF SECTION]

SECTION 02200

EARTHWORK

PART 1 – GENERAL

1.01 RESPONSIBILITY

A. The Contractor shall furnish all labor, equipment, and materials required to complete all work associated with excavation (including off-site borrow excavation), fill and backfill placement and compaction, testing of soil materials and compaction by an independent materials testing consultant, constructing embankments, dewatering, construction of drainage layers, installing foundation and backfill aggregate, placing filter and separation fabrics, stockpiling topsoil and any excess suitable material, designing, installing, maintaining and removing excavation support systems, disposing of all excess and unsuitable materials, providing erosion and sedimentation control, encasing utility conduits, site grading, preparation of pavement and structure subgrades, and other related and incidental work as required to complete the work shown on the Drawings and as specified herein.

B. All excavations shall be in conformity with the lines, grades, and cross sections shown on the Drawings or established by the Engineer.

C. It is the intent of this Specification that the Contractor conduct the construction activities in such a manner that erosion of disturbed areas and off-site sedimentation be absolutely minimized.

D. Earthwork performed under this Contract shall be done in conformance with these specifications. Items and activities not addressed herein shall be subject to the limitations of the latest editions of the Florida Department of Transportation Standard Specifications for Road and Bridge Construction. If there is a conflict between this specification and the Standard Specifications for Roads and Structures, the more conservative of the two shall take precedent.

E. Erosion and Sediment Control shall be performed in accordance with individual specifications, the Drawings, and with the latest edition of the Florida Stormwater, Erosion, and Sedimentation Control Inspector Manual (FSESCI Tier I). If there is a conflict between this specification and the FSESCI, the more conservative of the two shall take precedent.

F. All fill materials (soil, aggregate, topsoil, etc.) imported to the site and onsite materials to be reused as fill, backfill, or embankment shall be subjected to the testing requirements contained in Part 3.0 of this Section. The Contractor shall retain a materials testing consultant who shall perform all testing. The test results shall be used to determine if a material meets the requirements included herein. The Contractor shall furnish all necessary samples for laboratory testing and shall provide assistance and cooperation during field tests. The Contractor shall plan their operations to allow adequate time for laboratory tests and to permit taking of field density tests during compaction.

G. Any costs for re-testing required as a result of failure to meet compaction requirements shall be borne solely by the Contractor.

1.02 REFERENCE SPECIFICATIONS, CODES, AND STANDARDS

A. Without limiting the generality of the other requirements of the Specifications, all work herein shall conform to the applicable requirements of the following documents. All referenced Specifications, codes, and standards refer to the most current issue available at the time of Bid.

1. Florida Department of Transportation Standard Specifications for Road and Bridge Construction

2. Florida Department of Transportation Section 120 "Excavation and Embankment".

3. American Society for Testing and Materials (ASTM):

   a. ASTM C 127 – Standard Test Method for Relative Density (Specific Gravity) and Absorption of Coarse Aggregate.

   b. ASTM C 136 – Standard Test Method for Sieve Analysis of Fine and Coarse Aggregates.

   c. ASTM D 698 – Standard Test Methods for Laboratory Compaction Characteristics of Soil Using Standard Effort (12,400 ft-lb/ft3 (600 kN-m/m3))

   d. ASTM D 1140 – Standard Test Method for Determining the Amount of Material Finer than 75-µm (No. 200) Sieve in Soils by Washing

   e. ASTM D 1556 – Standard Test Method for Density and Unit Weight of Soil in Place by Sand Cone Method.

   f. ASTM D 1557 – Standard Test Methods for Laboratory Compaction Characteristics of Soil Using Modified Effort (56,000 ft-lb/lb3 (2,700 kN-m/m3)).

   g. ASTM D 1883 – Standard Test Method for California Bearing Ratio (CBR) of Laboratory-Compacted Soils.

   h. ASTM D 2216 – Test for Laboratory Determination of Water (Moisture) Content of Soil and Rock by Mass.

   i. ASTM D 2487 – Practice for Classification of Soils for Engineering Purposes (Unified Soil Classification System).

   j. ASTM D 4253 – Standard Test Method for Maximum Index Density and Unit Weight of Soils Using a Vibratory Table.

   k. ASTM D 4318 – Standard Test Methods for Liquid Limit, Plastic Limit, and Plasticity Index of Soils.

   l. ASTM D 6913 - Standard Test Methods for Particle-Size Distribution (Gradation) of Soils Using Sieve Analysis

   m. ASTM D 6938 – Standard Test Method for In-Place Density and Water Content of Soil and Soil Aggregate by Nuclear Methods (Shallow Depth).

1.03 SUBSURFACE CONDITIONS

A. Information on subsurface conditions is referenced under Section 02010 – Subsurface Investigation.

B. Attention is directed to the possible location of water pipes, sanitary pipes, storm drains, and other utilities located in the area of proposed excavation. In the event that excavation activities disrupt service, the Contractor shall perform all repairs at no additional cost to the Owner. The

Contractor shall contact Sunshine 811 or 1-800-432-4770 to request underground utility location mark-out at least three (3) working days, not including the day the request is called in, but no more than ten (10) working days prior to the beginning of excavation. The Contractor shall also contact and request utility location mark-out from buried utility owners with utilities on the project site that are not participants of Sunshine 811.

1.04 SUBMITTALS

A. In accordance with the procedures and requirements set forth in Section 01300 – Submittals, the Contractor shall submit the following:

1. Name and location of all material suppliers.

2. List of disposal sites for waste and unsuitable materials and all required permits for use of those sites.

3. Procedures for dewatering proposed by the Contractor shall be submitted for review and approval prior to any earthwork operations.

4. Temporary excavation support system design engineer qualifications.

5. Construction drawings and structural calculations for any types of excavation support required. Drawings and calculations shall be sealed by a currently registered Professional Engineer licensed in the State of Florida. Contractor shall also submit a monitoring plan developed by the excavation support design engineer.

6. Pre-construction condition inspection and documentation of all adjacent structures, utilities, and roadways near proposed installation of excavation support systems and near areas where dewatering is required to facilitate construction.

1.05 PRODUCT HANDLING

A. Soil and rock material shall be excavated, transported, placed, and stored in a manner so as to prevent contamination, segregation, and excessive wetting. Materials which have become contaminated or segregated will not be permitted in the performance of the work and shall be removed from the site.

1.06 USE OF EXPLOSIVES

A. The use of explosives will not be allowed for the prosecution of this work.

PART 2 – PRODUCTS

2.01 FILL MATERIALS

A. The Contractor shall be responsible for providing fill materials meeting the gradation requirements included herein.

B. All fill materials shall be free of organic material, environmental contaminants, and other unsuitable material.

C. Bedding material installed above and below the water table shall meet the requirements of the FDOT Standard Specifications for Road and Bridge Construction.

D. Below-grade walls shall be backfilled with Select Fill.

E. When the excavated material from required excavations meets the requirements of Select Fill or Common Fill, but is replaced with off-site borrow material for the Contractor's convenience, the costs associated with such work and material shall be borne by the Contractor.

F. Where excavated material does not meet requirements for Select Fill or Common Fill, the Contractor shall furnish off-site borrow material meeting the specified requirements herein. Determination of whether the borrow material will be paid for as an extra cost will be made based on the Contract Documents.

G. Contractor may stockpile excavated material to be used as Select Fill, Common Fill, Drainage Fill or Topsoil on site in areas designated in the Contract Documents. Soil materials may be stockpiled as necessary to sort, segregate, test, and transfer the materials. Excess material and materials considered unsuitable for reuse by the Owner shall be removed from the site for off-site disposal. No stockpiling of excavated material is allowed in a manner or location that would permit erosion and its subsequent sedimentation in wetlands or other natural areas.

2.02 SELECT FILL

A. Select fill shall be used where shown on the Contract Drawings.

B. Select fill shall not include particles or lumps larger than 3 inches.

C. Select fill used as backfill against walls shall not contain any rock larger than 1½ -inches.

D. Select fill shall consist of non-plastic materials classifying as GW, GW-GM, GP, SW, SW-SM, SP-SM, or SP per ASTM D-2487. Select fill shall be free of organic material, environmental contaminants, or other unsuitable material.

E. Open-graded and dense-graded FDOT aggregates meeting the gradation requirements above may be used as Select Fill.

F. Select Fill to be used as pavement subbase material shall be FDOT Aggregate Base Course.

G. Select Fill shall be placed in 8-inch-thick lifts, with the exception of FDOT No. 57 stone, which may be placed in 12-inch-thick lifts.

H. Select Fill shall be compacted to not less than 95 percent of the maximum dry density obtainable by ASTM D 698 and does not contain unsuitable material.

I. Select Fill shall be compacted at a moisture content within 20 percent of the optimum moisture content of the fill material in accordance with the ASTM D 698, Standard Proctor.

J. All materials used as Select Fill are subject to approval by the Owner.

2.03 DRAINAGE FILL

A. Drainage Fill shall be used where shown on the Contract Drawings.

B. Drainage Fill shall consist of FDOT No. 57 stone.

2.04 COMMON FILL

A. Common Fill shall be used where shown on the Contract Drawings.

B. Common Fill shall consist of non-organic on-site soils classifying as CH, MH, CL, ML, SC, SM, SP, SW, GC, GM, GP, or GW according to ASTM D 2487.

C. Common Fill shall be placed in 8-inch-thick loose lifts.

D. Common Fill shall be compacted to not less than 95 percent of the maximum dry density obtainable by ASTM D 698 and does not contain unsuitable material.

E. Common Fill shall be compacted at a moisture content within 20 percent of the optimum moisture content of the fill material in accordance with the ASTM D 698, Standard Proctor.

F. All material used as common fill is subject to approval by the Owner. If there is insufficient suitable material onsite, import whatever additional material is required which conforms to the specifications, at no additional cost to the Owner.

G. Select Fill may be used as Common Fill, subject to approval by the Owner and at no additional cost to the Owner.

2.05 TOPSOIL

A. Topsoil shall be friable and loamy (loam, sandy loam, silt loam, sandy clay loam, clay loam). It shall be free of debris, trash, stumps, rocks, roots, and noxious weeds, and shall give evidence of being able to support healthy vegetation. It shall contain no substance potentially toxic to plant growth. All topsoil shall be tested by a recognized laboratory for the following criteria: Organic matter content shall not be less than 1.5% by weight. pH range shall be from 6.0 -7.5. If pH is less than 6.0, lime shall be added in accordance with test results or in accordance with the recommendations of the vegetative establishment practice being used. Soluble salts shall not exceed 500 ppm. If additional topsoil is needed, it must meet the standards stated above.

2.06 GEOTEXTILES

A. The Contractor shall provide geotextiles as indicated on the Contract Drawings and specified herein.

2.07 UNDERCUT AND STABILIZATION

A. Where directed by Owner, undercut unsuitable materials and replace with No. 57 stone.

PART 3 – EXECUTION

3.01 STRIPPING

A. All vegetation such as brush, heavy sods, heavy growth of grass, decayed vegetable matter, rubbish, and any other unsuitable material within the area upon which embankment is to be placed shall be stripped or otherwise removed before the embankment is started, and in no case shall such objectionable material be allowed in or under the embankment.

B. In all areas to be excavated, filled, or paved, the topsoil shall be stripped to its full depth.

C. Topsoil may be stockpiled for subsequent reuse on site at locations shown on the Contract Drawings or designated by the Owner. Topsoil shall be kept separated from other excavated materials and shall be piled free of roots and other undesirable materials. Topsoil shall not be

stored in areas where it will interfere with surface drainage or with the conservation of trees, shrubs, and other vegetation to remain. No stockpile shall be placed within 50-feet of a pond, stream, wetland, or stormwater inlet.

3.02 EXCAVATION

A. All material excavated, regardless of its nature or composition, shall be classified as unclassified excavation. Excavation shall include the removal of all soil, rock, weathered rock, rocks of all types, boulders, conduits, pipe, all other obstacles encountered, and all other obstacles shown to be removed within the limits of excavation shown on the Contract Drawings or specified herein. No additional payment will be made for the removal of obstacles encountered within the excavation limits shown on the Drawings and specified herein.

B. All suitable material removed in the excavation shall be used as far as practicable in the formation of embankments, subgrades, and shoulders, and at such other places as may be indicated on the Drawings or indicated by the Engineer. No excavation shall be wasted except as may be permitted by the Owner. The Engineer and/or materials testing consultant will designate materials that are unsuitable. The Contractor shall furnish off-site disposal areas for the unsuitable material. Where suitable materials containing excessive moisture are encountered above grade in cuts, the Contractor shall construct above grade ditch drains prior to the excavation of the cut material when in the opinion of the Engineer and/or materials testing consultant such measures are necessary to provide proper construction.

C. All excavations shall be made in the dry and in such a manner and to such widths as will give ample room for properly constructing and inspecting the structures and/or piping they are to contain and for such excavation support, pumping, and drainage as may be required. Excavation shall be made in accordance with the grades and details shown on the Drawings and as specified herein.

D. Excavation slopes shall be flat enough to avoid slides that will cause disturbance of the subgrade or damage of adjacent areas. Excavation requirements and slopes shall be as indicated in the Drawings.

E. The Contractor shall intercept and collect surface runoff both at the top and bottom of cut slopes. The intersection of slopes with natural ground surfaces, including the beginning and ending of cut slopes, shall be uniformly rounded as shown on the Drawings or as may be indicated by the Engineer. Concurrent with the excavation of cuts the Contractor shall construct intercepting berm ditches or earth berms along and on top of the cut slopes at locations shown on the Drawings or designated by the Engineer. All slopes shall be finished to reasonably uniform surfaces acceptable for seeding and mulching operations. No rock or boulders shall be left in place which protrude more than 1 foot within the typical section cut slope lines, and all rock cuts shall be cleaned of loose and overhanging material. All protruding roots and other objectionable vegetation shall be removed from slopes.

F. It is the intent of these Specifications that all structures shall bear on an aggregate base, crushed stone or screened gravel bedding placed to the thickness shown on the Drawings, specified in these Specifications, or not less than 6-inches. Bedding for buried piping shall be as shown on the Drawings.

G. The bottom of all excavations for structures and pipes shall be examined by the Engineer and/or materials testing consultant for bearing value and the presence of unsuitable material. If, in the opinion of the Engineer and/or materials testing consultant, additional excavation is required due to the low bearing value of the subgrade material, or if the in-place soils are soft, yielding, pumping, or wet, the Contractor shall remove such material to the required width and depth and

replace it with thoroughly compacted select fill, and/or crushed stone or screened gravel as indicated by the Engineer. Payment for such additional work ordered by the Engineer shall be made as an extra by a Change Order in accordance with Section 01153. No payment will be made for subgrade disturbance caused by inadequate dewatering or improper construction methods.

H. All cuts shall be brought to the grade and cross section shown on the Drawings, or established by the Engineer, prior to final inspection and acceptance by the Engineer.

I. Slides and over-breaks which occur due to negligence, carelessness, or improper construction techniques on the part of the Contractor shall be removed and disposed of by the Contractor as indicated by the Engineer at no additional cost to the Owner. If grading operations are suspended for any reason whatsoever, partially completed cut and fill slopes shall be brought to the required slope and the work of seeding and mulching or other required erosion and sedimentation control operations shall be performed.

3.03 EXCAVATION SUPPORT

A. The Contractor shall furnish, place, and maintain such excavation support which may be required to provide safe working conditions and support sides of excavation or to protect structures, pipes, and utilities from possible. The Contractor shall be exclusively responsible for maintaining safe working conditions and structure integrity without overstressing or damaging existing structures, pipes, and utilities resulting from the Contractor temporarily placing, moving, or removing loads on or adjacent to existing structures, pipes, and utilities. If the Engineer is of the opinion that at any point sufficient or proper supports have not been provided, the Engineer may order additional supports put in at the expense of the Contractor. The Contractor shall be responsible for the adequacy of all supports used and for all damage resulting from failure of support system or from placing, maintaining, and removing the support system.

B. The selection of and design of any proposed excavation support systems is exclusively the responsibility of the Contractor. Contractor shall submit drawings and calculations to the Engineer on the proposed systems signed and stamped by a licensed Professional Engineer currently registered in the in the State of Florida.

C. The excavation support system shall be installed by a specialized contactor with a minimum of five (5) years' experience installing the type of excavation support system proposed.

D. The Contractor shall exercise caution in the installation and removal of supports to ensure no excessive or unusual loadings or vibrations are transmitted to any new or existing structure. The Contractor shall promptly repair at their expense any and all damage that can be reasonably attributed to installation or removal of excavation support system.

E. Contractor shall monitor movement and vibration in the excavation support systems as well as movement and vibration at adjacent structures, utilities and roadways near excavation supports. Contractor shall submit a monitoring plan developed by the excavation support design engineer. All pre-construction condition assessment and documentation of adjacent structures on-site and off-site shall be performed by the Contractor. If any sign of distress such as cracking or movement occurs in any adjacent structure, utility or roadway during installation of supports, subsequent excavation, service period of supports, subsequent backfill and construction, or removal of supports, Engineer shall be notified immediately. The Contractor shall be exclusively responsible for repair of any damage to any roadway, structure, utility, pipes, etc. both on-site and off-site, as a result of their operations.

F. All excavation supports shall be removed upon completion of the work except as indicated herein. The Engineer may permit supports to be left in place at the request and expense of the Contractor. The Engineer may order certain supports left permanently in place in addition to that required by the Contract. The cost of the materials so ordered left in place, less a reasonable amount for the eliminated expense of the removal work omitted, will be paid as an extra by a Change Order in accordance with Section 01153. Vibrations of new and existing structures shall be considered when the Contractor decides whether to remove excavation supports or leave them in place. Any excavation supports left in place shall be cut off at least two (2) feet below the finished ground surface or as directed by the Engineer.

3.04 PROTECTION OF SUBGRADE

A. To minimize the disturbance of bearing materials and provide a firm foundation, the Contractor shall comply with the following requirements:

1. Use of heavy rubber-tired construction equipment shall not be permitted on the final subgrade unless it can be demonstrated that drawdown of groundwater throughout the entire area of the structure is at least 3 feet below the bottom of the excavation (subgrade). Even then, the use of such equipment shall be prohibited should subgrade disturbance result from concentrated wheel loads.

2. Subgrade soils disturbed through the operations of the Contractor shall be excavated and replaced with compacted select fill or crushed stone at the Contractor's expense as indicated by the Engineer.

3.05 PROOF-ROLLING

A. The subgrade of all structures and all areas that will support pavements or select fill shall be proof-rolled. After stripping of topsoil, excavation to subgrade and prior to placement of fills, the exposed subgrade shall be carefully inspected by probing and testing as needed. Any topsoil or other organic material still in place, wet, soft, or loose soil, and other undesirable materials shall be removed. The exposed subgrade shall be proof-rolled with a heavily loaded tandem-wheeled dump truck to check for pockets of soft material hidden beneath a thin crust of better soil. Any unsuitable materials thus exposed shall be removed and replaced with an approved compacted material, as directed by the materials testing consultant.

3.06 DEWATERING

A. The Contractor shall perform all dewatering as required for the completion of the work. Procedures for dewatering proposed by the Contractor shall be submitted to the Engineer for review prior to any earthwork operations.

B. The dewatering system shall be of sufficient size and capacity as required to control groundwater or seepage, to permit proper excavation operations, embankment construction and reconstruction, and subgrade preparation, and to allow concrete to be placed in a dry condition. The system shall include a sump system or other equipment, appurtenances, and other related earthwork necessary for the required control of water. The Contractor shall drawdown groundwater to at least 2 feet below the bottom of excavations (subgrade), over the entire excavation area, at all times in order to maintain a dry and undisturbed condition.

C. The Contractor shall control, by acceptable means, all water regardless of source. Water shall be controlled, and its disposal provided for at each berm, structure, etc. The entire periphery of the excavation areas shall be ditched and diked to prevent water from entering the excavation. The Contractor shall be fully responsible for disposal of the water and shall provide all necessary

means at no additional expense to the Owner. The Contractor shall be solely responsible for proper design, installation, proper operation, maintenance, and any failure of any component of the system.

D. The Contractor shall be responsible for and shall repair without cost to the Owner, any damage to work in place and the excavation, including damage to the bottom due to heave and including removal of material and pumping out of the excavated area. The Contractor shall be responsible for damages to any other area or structure caused by their failure to maintain and operate the dewatering system proposed and installed by the Contractor.

E. The Contractor shall be responsible for and shall repair, without cost to the Owner, any damage to work in place and nearby structures, roadways, and utilities which can be reasonably attributed to dewatering operations. This includes settlement of structures, roadways, and utilities due to dewatering of soils supporting the structures, roadways, and utilities.

F. The Contractor shall take all the steps considered necessary to familiarize himself with the surface and subsurface site conditions, and shall obtain the data that is required to analyze the water and soil environment at the site and to assure that the materials used for the dewatering systems will not erode, deteriorate, or clog to the extent that the dewatering systems will not perform properly during the period of dewatering.

G. Prior to the execution of the work, the Contractor, Owner and Engineer shall jointly survey the condition of adjoining structures. Photographs and records shall be made of any prior settlement or cracking of structures, pavements, and the like, that may become the subject of possible damage claims.

H. If it is necessary to interrupt existing irrigation systems, sewers or under drainage conduits, utilities or similar underground structures, or parts thereof, the Contractor shall be responsible for and shall take all necessary precautions to protect and preserve or provide temporary services. When such facilities are encountered, the Contractor shall, at his own expense, satisfactorily repair all damage to such facilities or structures which may result from any of his operations during the period of the Contract.

3.07 FILL OR EMBANKMENTS

A. Contractor shall perform the construction of fill or embankments in such a manner that cut and fill slopes will be completed to final slopes and grade in a continuous operation. The operation of removing excavation material from any cut and the placement of embankment in any fill shall be a continuous operation to completion unless otherwise permitted by the Engineer.

B. Subgrades upon which fill or embankments are to be constructed shall be stripped of topsoil, organic material, rubbish and other extraneous materials. After stripping and prior to placing fill or embankment material, the Contractor shall compact the top 12inches of in-place soil as specified under this Section.

C. Any soft or unsuitable materials revealed before or during placement fill or embankment placement shall be removed as indicated by the Engineer and/or materials testing consultant and replaced with select fill and compacted as required.

D. Fill subgrades on which fill or embankment is to be placed, shall be scarified or stepped in a manner which will permit bonding of the embankment with the existing surface. The fill or embankment soils shall be as specified under Part 2 - Products, and shall be deposited and spread in successive, uniform, approximately horizontal layers. The loose thickness of each lift shall not exceed the thickness for each fill type noted herein.

E. Hauling shall be distributed over the full width of the embankment, and in no case will deep ruts be allowed to form during the construction of the embankment. Fill or embankment subgrades shall be properly drained at all times and kept free of flowing or ponding water. Saturated soils, shall be removed as directed by the Engineer.

F. Each layer of the embankment shall be thoroughly compacted to the density specified herein

G. The embankment or fill material in the layers shall be of the proper moisture content before rolling to obtain the prescribed compaction. Moisture conditions and manipulation of the fill or embankment material, when necessary, shall be performed to maintain a uniform moisture content throughout the layer. Should the material be too wet or too dry to permit proper compaction, earthwork operations shall be delayed until the material is adequately moisture conditioned. Samples of all fill or embankment materials for testing, both before and after placement and compaction, will be taken at frequent intervals. From these tests, corrections, adjustments, and modifications of methods, materials, and moisture content will be made to construct the embankment.

H. Where fill or embankments materials are to be placed and compacted on sloped subgrades steeper than 4:1 shall be benched. Benches shall be at least 6-feet wide.

I. When rock and other embankment material are excavated at approximately the same time, the rock shall be incorporated into the outer portions of the embankments and the other material which meets the requirements for select fill shall be incorporated into the formation of the embankments. Stones or fragmentary rock larger than 4inches in their greatest dimension will not be allowed within the top 6 inches of the final grade. Stones, fragmentary rock, or boulders larger than 12 inches in their greatest dimension will not be allowed in any portions of embankments and shall be disposed of by the Contractor as indicated by the Engineer. When rock fragments or stone are used in embankments, the material shall be brought up in layers as specified or directed and every effort shall be exerted to fill the voids with finer material to form a dense, compact mass which meets the densities specified for embankment compaction.

3.08 BACKFILLING

A. All structures and pipes shall be backfilled with the type of materials shown on the Drawings and specified herein. Fill placed as structure or utility backfill shall be deposited in successive, uniform, approximately horizontal lifts.

B. Each lift of fill placed backfill shall be thoroughly compacted to the density specified herein for each type of fill.

C. Where excavation support is used, the Contractor shall take all reasonable measures to prevent loss of support beneath and adjacent to pipes and existing structures when supports are removed. If significant volumes of soil cannot be prevented from clinging to the extracted supports, the voids shall be continuously backfilled as rapidly as possible. The Contractor shall thereafter limit the depth below subgrade that supports will be installed in similar soil conditions or employ other appropriate means to prevent loss of support.

D. Backfill against concrete or masonry structure shall not be performed until the Work has been reviewed and backfilling permitted. Backfill against walls shall also be deferred until the structural slab for floors above the top fill line have been placed and attained design strength or earlier at the discretion of the Engineer. Partial backfilling against adequately braced wall may be considered by the Engineer on an individual situation basis. Where walls are to be waterproofed, all Work shall be completed and membrane materials dried or cured according to the manufacturer's instructions before backfilling.

E. Backfill against tanks and other structures which are to retain liquids shall not be performed until leakage tests are completed and accepted.

3.09 COMPACTION

A. The Contractor shall compact embankments, backfill, crushed stone, aggregate base, and in-place subgrade in accordance with the requirements of this Section. The densities specified herein refer to percentages of maximum density as determined by the noted test methods. Compaction of materials on the project shall be in accordance with the following schedule:

	Density % Standard Proctor (D 698)	Density % Mod. Proctor (D 1557)	Max. Lift Thickness as Compacted Inches
Embankments Beneath Structures, Roadways, and Sidewalks*	98	92	8
Common Fill Areas	95	90	8
Backfill Around Structures	95	90	8
Backfill in Pipe Trenches	95	90	8
Crushed Stone Beneath Structures	**	**	12
Select Sand	98	92	8
Aggregate Base Course (ABC) Beneath Structures, Roadways, and Sidewalks	**	**	8
Crushed Stone Backfill	**	**	12
Crushed Stone Pipe Bedding	**	**	12
In Place Subgrade Beneath Structures, Roadways, and Sidewalks	98	92	Top 12-inches

* Embankments beneath structures shall be considered to include a zone 10 feet out from the foundation of the structure extending down to the natural ground on a 45° slope.
** The aggregate shall be compacted to a degree acceptable to the Engineer by use of a vibratory compactor and/or crawler tractor.

B. Compaction Near Existing Structures

1. Vibratory equipment shall not be used with 25 feet of any existing structure.

2. Within 25 feet of any existing structure, non-vibratory compaction equipment such as a drum roller with a maximum weight of 4 tons should be used. Within 5 feet of any existing structure, a walk behind vibratory sled or roller shall be used.

C. Field density tests will be made by the materials testing consultant to determine if the specified densities have been achieved, and these tests shall be the basis for accepting or rejecting the compaction. In-place density tests will be performed in accordance with ASTM D 1556, ASTM D 1557, or ASTM D 6938. The Engineer, in conjunction with the materials testing consultant, will be the judge as to which test method will be the most appropriate. Failure to achieve the specified

densities shall require the Contractor to recompact the material or remove it as required. The Contractor shall, if necessary, increase the compactive effort by increasing the number of passes, using heavier or more suitable compaction equipment, or by reducing the thickness of the layers. The Contractor shall adjust the moisture contents of the soils to bring them within the optimum range by drying them or adding water as required.

D. Testing will be performed as frequently as deemed necessary by the Engineer and/or materials testing consultant. As a minimum, one in place density test shall be performed for each 1000 cubic yards of embankment placed and 500 cubic yards of backfill placed or one test performed each day for either or as directed by the Engineer or recommended by material testing consultant.

E. Those areas outside of the pavement areas in which the top layer of soil material becomes compacted, due to hauling or to any other activity of the Contractor, shall be scarified to a depth of 4 inches, as directed, to loosen and pulverize the soil.

3.10 VIBRATION MONITORING

A. Vibration monitoring shall be performed at nearby structures when compaction work is ongoing. A single monitoring point using vibration monitoring equipment capable of detecting velocities of 0.1 inch/second or less and survey measurements shall be used for vibration monitoring at each of the nearest structures. An elevation measurement on nearby structures shall be taken before compaction work starts, and then at least twice a day during the work with one reading taken at the conclusion of the day's operations. Elevation measurements shall be recorded to an accuracy of 0.005 foot. If at any time the Contractor detects settlement or heave of 0.005-feet or more, or vibration levels of 1.0 inch/second or more, the vibratory compaction shall be stopped immediately, and the Engineer notified.

3.11 REMOVAL OF EXCESS AND UNSUITABLE MATERIALS

A. The Contractor shall remove and dispose of off-site all excess and unsuitable materials. Within thirty (30) consecutive days after Notice to Proceed, the Contractor shall submit to the Engineer for review all required permits and a list of disposal sites for the unsuitable materials. If the disposal site is located on private property, the submittal shall also include written permission from the owner of record.

B. All excess and unsuitable materials shall be disposed of in locations and under conditions that comply with federal, state/commonwealth and local laws and regulations.

C. The Contractor shall obtain an off-site disposal area prior to beginning excavation operations.

D. All excess and unsuitable materials shall be hauled in trucks of sufficient capacity and tight construction to prevent spillage. Trucks shall be covered to prevent the propagation of dust.

[END OF SECTION]

SECTION 02540

SITE GRADING

PART 1 – GENERAL

1.01 GENERAL REQUIREMENTS

A. Remove topsoil and stockpile on site for later use.

B. Excavate sub soil and reform to grades, contours and levels.

C. Excavate or fill for roadways, walks, curbs, gutters, parking areas, landscaped areas and as shown on the Drawings.

1.02 RELATED WORK SPECIFIED ELSEWHERE

A. Section 02100: Clearing and Grubbing

B. Section 02222: Excavation and Backfill for Utilities

C. Section 02224: Excavation and Backfill for Structures

D. Section 02550: Finish Grading

1.03 EXISTING CONDITIONS

A. Known underground, surface and aerial utility lines, and buried objects are based on best available data and indicated on the Drawings. Contractor shall verify all locations.

1.04 PROTECTION

A. Protect trees, shrubs and lawns and other features remaining as part of final landscaping.

B. Protect bench marks, and existing structures, fences, roads, sidewalks, paving and curbs against damage from equipment and vehicular traffic.

C. Protect aerial, surface, or underground utility lines or appurtenance which are to remain.

D. Repair any damage, at no cost to Owner.

1.05 QUALITY CONTROL

A. Grade the site to the required elevations. Spot elevations are shown on the Drawings and the finished surfaces shall be uniformly sloped between these locations.

PART 2 – PRODUCTS

2.01 FILL

A. New fill used for site grading shall be noncohesive, nonplastic, granual mixture of local sand and limerock, shall be free from vegetation, organic material or muck and shall contain not more than 8 percent material by weight which passes the No. 200 sieve. Broken concrete shall not be used in the fill. Fill material containing limerock shall have sufficient sand to fill the voids in the limerock,

and no individual rocks or pieces of hard material that will not pass a 6 inch diameter ring shall be used in the fill; except that the upper 4 inches of all backfill or fills shall not contain any rock or hard material that will not pass a 3 inch diameter ring. Provide all fill material from any excess suitable on site material or from off site sources, all subject to review and acceptance by the Engineer prior to use. Determine the volume of material required for the site.

B. Excavated fill material: Soil free from roots, rocks larger than 3 inches, and building debris. Backfill shall be free of unsuitable material such as large rock, muck and debris.

C. Additional fill material: Shall meet the requirements in 2.01.A.

PART 3 – EXECUTION

3.01 PREPARATION

A. Establish and identify required lines, levels, contours and datum.

B. Maintain bench marks, monuments, and other reference points. Re-establish if disturbed or destroyed, at no cost to Owner.

C. Before start of grading, establish the location and extent of utilities in the work areas. Notify utilities to remove and relocate lines which are in the way of construction.

D. Maintain, protect, reroute or extend as required existing utilities to remain which pass through the work area.

3.02 REMOVAL OF TOPSOIL

A. Topsoil of horticultural value shall be stripped from areas of construction under this contract and stockpiled in area designated by Engineer. Said material shall be stockpiled separately from fill material.

B. Do not permit topsoil to be mixed with subsoil

C. Do not strip topsoil when wet.

D. Do not drive heavy equipment over stockpiled topsoil.

3.03 GRADING AND COMPACTION

A. Place fill material in lifts not to exceed 6 inches and compact to a density of not less than 95 percent of maximum density at optimum moisture as determined by ASTM D 1557. Fill material shall be within plus or minus 2 percentage points of optimum moisture content.

3.04 ROUGH GRADING

A. Rough grade site to required levels, profiles, contours and elevations ready for finish grading and surface treatment. Maintain the following:

B. Sodded areas 4 1/2 inches below finished grade elevation.

C. Seeded areas 6 inches below finished grade.

D. Paved areas 18-24 inches based on asphalt thickness below finished grade elevations.

E. Shrub beds 24 inches below finished grade elevations.

F. Flower beds 18 inches below finished grade elevations.

G. Concrete surface 8 inches below finished grade elevations.

H. Prior to placing fill material over undisturbed subsoil, scarify surface to depth of 6 inches.

3.05 FINE GRADING

A. After structures, bases and pavements are completed and the yard piping trenches backfilled, fine grade the disturbed areas of the site. Remove all construction debris, regardless of size. Shape and slope the completed surface to drain away from the structures. The completed surface shall be within 0.1 foot of the elevations shown on the Drawings, unless otherwise accepted by the Engineer. Minor adjustments to line and grade may be required as the Work progresses in order to satisfy field conditions.

3.06 SURPLUS MATERIAL

A. Remove surplus materials from site.

B. Dispose of surplus material at no cost to Owner.

[END OF SECTION]

SECTION 02550

FINISH GRADING

PART 1 – GENERAL

1.01 GENERAL REQUIREMENTS

A. The Contractor shall, under this Section, supply, place, compact and roll finish grade materials prior to landscaping work.

B. Finish grade sub soil.

C. Cut out areas to receive stabilizing base course materials for paving and sidewalks.

D. Place, finish grade and compact topsoil.

1.02 RELATED WORK SPECIFIED ELSEWHERE

A. Section 02222: Excavation and Backfill for Utilities.

B. Section 02224: Excavation and Backfill for Structures.

C. Section 02540: Site Grading.

D. Section 02560: Sodding, Sprigging, and Seeding.

1.03 PROTECTION

A. The Contractor shall prevent damage to existing fencing, trees, landscaping, natural features, bench marks, pavement, utility lines, and irrigation piping and control system . Correct damage at no cost to the Owner. Damaged irrigation system control wiring shall be replaced. No splice repairs will be accepted.

PART 2 – PRODUCTS

2.01 MATERIALS

A. Topsoil shall be friable loam free from subsoil, roots, grass, excessive amount of weeds, stones and foreign matter; acidity range (pH) of 5.5 to 7.5; containing a minimum of 4% and a maximum of 25% organic matter. (Use topsoil stockpiled on site if conforming to these requirements, or as directed by the Engineer.)

PART 3 – EXECUTION

3.01 SUB-SOIL PREPARATION

A. Rough grade sub soil systematically to allow for a maximum amount of natural settlement and compaction. Eliminate uneven areas and low spots. Remove debris, roots, branches, stones, etc., in excess of 2 inches in size. Remove sub soil which has been contaminated with petroleum products.

B. Cut out areas, to sub grade elevation, which are to receive stabilizing base for paving and sidewalks.

C. Bring sub soil to required levels, profiles and contours. Make changes in grade gradual. Blend slopes in to level areas.

D. Slope grade away from building minimum 4 inches in 10 feet (unless indicated otherwise on Drawings).

3.02 PLACING TOPSOIL

A. Place topsoil in area where seeding, sodding and planting is to be performed. Place to the following minimum depths, up to finished grade elevations:

1. 4 1/2 inches for sodded areas.

2. 6 inches for seeded areas.

3. 24 inches for shrub beds.

4. 18 inches for flower beds.

B. Use topsoil in relatively dry state. Place during dry weather.

C. Fine grade topsoil eliminating rough and low areas to ensure positive drainage. Maintain levels, profiles and contours of sub grades.

D. Remove stones, roots, grass, weeds, debris and other foreign material while spreading.

E. Manually spread topsoil around trees, plants, buildings and other structures to prevent damage which may be caused by grading equipment.

F. Lightly compact placed topsoil.

3.03 SURPLUS MATERIAL

A. Remove surplus sub soil and topsoil from site.

B. Leave stockpile areas and entire job site clean and raked, ready to receive landscaping.

[END OF SECTION]

SECTION 02604

UTILITY STRUCTURES

PART 1 GENERAL

1.01 SCOPE

A. Furnish and install, as shown on the Drawings, manholes and vaults including:

1. Precast concrete sections
2. Brick
3. Mortar
4. Cast iron frame and lids

1.02 RELATED WORK

A. Section 02710 - Underdrain System

B. Section 02222 – Excavation and Backfill for Utilities

1.03 REFERENCE STANDARDS

A. Without limiting the generality of the other requirements of the specifications, all work herein shall conform to the applicable requirements of the following documents. All referenced specifications, codes, and standards refer to the most current issue available at the time of Bid.

1. ASTM C478: Precast Reinforced Concrete Manhole Sections.
2. ASTM C443: Joints for Circular Concrete Sewer and Culvert Pipe Using Rubber Gaskets.
3. ASTM C857: Minimum Structural Design Loading for Underground Precast Concrete Utility Structures
4. ASTM C990: Specifications for Joints in Concrete Pipe, Manholes, and Precast Box Sections Using Preformed Flexible Joint Sealants
5. FDOT 425: Inlets, Manholes, and Junction Boxes

1.04 SUBMITTALS

A. Submit samples and/or Shop Drawings in accordance with Section 01300 - Submittals.

B. In addition to items listed in Section 03400 - Precast Concrete, Shop Drawings shall include, but not be limited to:

1. Complete layout and installation Drawings and schedules with clearly marked dimensions.
2. Material certificates on all piping materials.

3. Structural design calculations sealed by a P.E. registered in the State of Florida. Design calculations for precast manholes and vaults shall include confirmation structures adequately resist flotation when they are totally empty and subjected to groundwater at the full height of structure.

4. Results of leakage test.

PART 2 PRODUCTS

2.01 ACCEPTABLE MANUFACTURERS

A. Neenah No. R 1712 with Type A Lid.

B. Russco No. M 510 with Type C lid.

C. Clark No. R502 with Type A lid.

D. Or approved equal.

2.02 PRECAST MANHOLES, VAULTS, AND METER BOXES

A. Precast utility structures shall be furnished with waterstops, sleeves and openings as noted on the Drawings. Box out for wall pipes shall conform accurately to the sizes and elevations of the adjoining pipes. Precast utility structures shall be watertight and conform to the requirements of ASTM C 478 and ASTM C857 with the following modifications there to:

1. Materials shall conform to Section 03400 - Precast Concrete.

2. The date and name of manufacturer shall be marked inside each precast section.

3. Dimensions shall be as shown on the Drawings.

4. Covers and frames shall be as specified in Section 2.02 H.

5. Mechanical Details such as piping, electrical, and other details shall be as shown on the Drawings.

B. Manholes

1. Manhole section shall have a minimum internal diameter of 4'-0", unless noted otherwise.

2. Details and dimensions for manhole construction shall be as shown on the Drawings.

3. Manholes and utility structures shall include ballast concrete and/or other means necessary to ensure manholes resist flotation when empty and subjected to groundwater full height of structure.

4. Concrete floor slab shall be minimum eight inches thick with #5 bar at 10-inch spacing each way or precast bases.

5. Manholes shall be concentric unless otherwise indicated on drawings, standards, and specifications.

6. Joints shall be a compression type, neoprene gasket joint conforming to ASTM C443, of

a design approved by the Engineer.

7. Lifting holes through the structures are not permitted.

8. All grout used for sealing around pipe openings shall be of a non-shrinking type, acceptable to the Engineer, designed for use in water. All openings and joints shall be sealed watertight.

9. Precast manhole tops shall terminate at such elevations as will permit laying up a minimum of five inches of brick under the manhole frame to make allowance for future street grade adjustments.

10. Drop connections, where required on precast manholes, shall be cast monolithically with the manhole elements.

11. Inverts shall be formed of 4,000 PSI concrete with approved coating sealant as described below, to provide a smooth flowing channel of the exact shape of the sewer to which it connects. All inverts of manholes shall be shaped while the manholes are under construction. All inverts shall follow the grades of the pipe entering the manholes. Changes in direction of the sewer and entering branch or branches shall have a true curve of as large a radius as the size of the manhole will permit.

12. Where shown on the Drawings or ordered by the Engineer, the Contractor shall provide manholes with stub lines for connection to future sewer lines. Provide the end of each stub line with a bell and close by means of an approved plug. This plug shall be removed, at some later time, without injury to the pipe. Reference each stub accurately to the center of the manhole and record the actual invert elevation of each end.

C. BRICK

1. Brick shall be sound, hard-burned common brick conforming to ASTM C32, Grade MS.

D. CONCRETE BLOCK

1. Concrete block shall be solid, rectangular concrete masonry units conforming to ASTM C139.

E. JOINT SEALANT

1. Joint sealant shall be a preformed flexible sealant conforming to the requirements of ASTM C990, paragraph 6.2, Butyl Rubber Sealant. Joint sealant shall be Pro-Stik Butyl Sealant by Press-Seal, Butyl-Nek Join Sealant by Henry, CS-102 Butyl Rubber Sealant for all Precast Structures by ConSeal, or equal.

F. FLEXIBLE RUBBER SLEEVE

1. The spring set type shall have a stainless steel interior power sleeve or expander and shall be the PSX assembly by Press-Seal Gasket Corporation, the Kor-N-Seal assembly by National Pollution Control Systems, Lock Joint Flexible Manhole Sleeve by Interpace Corp, or equal.

2. The cast-in-place type shall conform to ASTM C923 and shall include stainless steel take up clamps.

3. Flexible seal assemblies shall permit at least an eight (8) degree deflection from the center line of the opening in any direction while maintaining a watertight connection.

G. RUBBER BLADDER

1. The rubber bladder seal shall conform to ASTM C923 suitable for pressure testing at 10 psi minimum, with a 3/8-inch minimum wall thickness.

2. The rubber bladder seal shall contain an environmentally safe, anti-bacterial compound which turns into a high viscosity gel when in contact with pressurized water.

3. The rubber bladder seal shall be NPC Contour Seal by Kor-N-Seal, or equal.

H. COVERS AND FRAMES

1. Covers and frames shall comply with Section 05540 - Castings and shall be provided by the utility structure manufacturer.

2. Manhole covers and frames shall meet the following requirements:

   a. Dimensions shall match those indicated on the Drawings.

   b. All manhole frames and covers shall be US Foundry, Neenah, East Jordan Iron Works or approved equal.

   c. Storm drain grated inlet frames and grates shall be Neenah, East Jordan Iron Works, or equal.

   d. Curb inlet frames and grates shall be Neenah, East Jordan Iron Works, or equal, and shall include frame, grate, and hood.

3. Vault covers shall have lifting handles and shall be bolted with stainless steel bolts.

4. Frames and covers shall be identical throughout the Contract.

I. CONCRETE BALLAST

1. Concrete ballast shall be Class B concrete Ballast shall be provided as necessary to ensure manhole resists flotation when empty and subjected to full height groundwater conditions.

J. FLEXIBLE JOINT SEALER

1. Flexible joint sealer shall be a rubber ring waterstop as manufactured by Fernco Joint Sealer Co., or equal.

K. VAULTS

1. Vaults and similar structures shall be constructed as shown on the Drawings of size and shape indicated. The installation shall be in accordance with all other sections of this specification.

2. Pipes entering the vault or structure shall enter through wall sleeves, except for concrete or VCP pipe entering a wet vault, wherein the pipe may be installed as follows:

3. The pipe may be cast into the wall of the structure provided the first three pipe lengths outside the structure shall have minimum laying length, dependent on pipe type and size, with the first point occurring within 12 inches of the structure.

4. Grout the pipe into the structure with a non-shrinking grout, acceptable to the Engineer, designed for use in water. All joints shall be sealed watertight.

5. Utilize a sealing material between the pipe and structure such as Link Seal manufactured by the Thunderline Corporation, or equal when approved by the Engineer.

PART 3 EXECUTION

3.01 DESIGN CRITERIA

A. Minimum structural design loading for underground precast concrete vaults shall be as indicated in ASTM C857, unless otherwise noted herein. Precast items subjected to vehicular traffic shall be designed for H-20 traffic loading. Other precast items shall be designed for a vertical live load of 300 psf.

B. Walls of precast items shall be designed for a vertical surcharge of 100 psf.

C. Precast manholes and vaults shall be designed to resist flotation when totally empty and subjected to groundwater full height of the manhole/vault.

3.02 FABRICATION AND CASTING

A. Fabrication and casting shall conform to specifications herein.

B. All base sections designated to receive concrete ballast and all electrical manholes shall extend monolithically a minimum of 6 inches beyond the outside face of the wall for the entire periphery. All other utility structures shall have a standard base.

C. Utility structures built around existing pipe shall have a cast-in-place base slab.

3.03 HANDLING, TRANSPORTING, AND STORING

A. Handling, transporting and storing of precast items shall comply with Section 03400 - Precast Concrete.

3.04 INSTALLATION

A. Installation shall conform with Section 03400 - Precast Concrete.

B. Frames and covers or grates shall be set so that tops are at elevations indicated on the Drawings or flush with finished grade where no elevation is indicated.

C. Joints between riser sections shall be sealed with joint sealant.

D. All openings in utility structures shall have flexible rubber sleeves sized to fit the connecting pipe and installed to provide watertight joints in accordance with the manufacturer's recommendations. The interior of the sleeve shall be filled with Class B concrete.

E. Openings that are too large for flexible rubber sleeves shall utilize rubber bladder seals which are expanded by water injected using a pressure pump.

F. All units shall be installed plumb and level.

G. All lift holes and joints shall be filled with non-shrink grout conforming to Section 03600, grout inside and out.

H. The manhole frames shall be set to their required elevations either with grade rings or with two or three courses of brick masonry laid around the top of the upper wall section. Such brick work shall be given a 1-inch mortar coat on the inside and out.

I. Concrete ballast shall be placed so that it bears directly on the utility structure base against the outer wall monolithically encircling the structure for the full height indicated on the Drawings. Additional ballast may be required where the depth or elevation of the structure varies from the Drawings.

J. Brick or Concrete Block

1. Brick or concrete block shall be laid with broken joints and all horizontal and vertical joints filled with cement-sand mortar. Outside of walls shall be plastered with a minimum 1-inch thick coat of cement-sand mortar troweled smooth.

K. Connection to Existing Pipe

1. Verify the diameter and invert elevation of existing pipe to be connected to new utility structures prior to beginning work on the structures.

2. Provide adequate protection to prevent damage to the existing pipe.

3. Provide adequate means for plugging and/or transferring the existing flow in the pipe to allow for the construction of inverts and grouting.

4. Cut off the existing pipe sufficiently for connection to the new structure and remove.

5. Thoroughly clean all foreign matter and coat the pipe surface with epoxy adhesive where the pipe joins the new structure.

6. Install a flexible joint sealer around the pipe.

7. Grout inside and outside of wall penetration with nonshrink grout.

L. Backfill structures in accordance with Section 02200 - Earthwork.

M. Clean all structures of any accumulation of silt, debris, or foreign matter and keep clean until final acceptance of the work.

N. Excavation shall conform to Section 02200 - Earthwork.

O. Structure bases shall bear on a minimum of 12 inches of compacted stone unless otherwise indicated on the Drawings. Compacted stone shall be wrapped when under parking lot or roadways or when weepholes are present.

P. Channel Inverts

1. Inverts shall be placed using Class B concrete with forms sufficient to provide a smooth half-round shape as shown on the Drawings. Manhole bases employing full depth

precast inverts are acceptable.

2. Where the slope of the line does not change through a manhole, a constant slope shall be maintained in the invert. Where slope changes occur within a given manhole, the transition shall be smooth and shall occur at the approximate center of the manhole.

3. Inverts shown on the Drawings are taken at the center of the manhole unless otherwise noted.

Q. No backfilling of excavation, above elevation of top of interior concrete fill, shall be performed until waterproof coating has been cured for at least twenty-four (24) hours and inspected and approved by the Engineer. Any defective coverage shall be repaired to the satisfaction of the Engineer before backfilling is performed.

3.05 LEAK PROOFING

A. Walls shall be sealed against leakage by the application on the complete exterior surface of a plaster coat of cement mortar of approximately the same composition as mortar for masonry joints, applied not less than 1/2 inch in thickness at any point by steel trowel as the wall is built. Precast manholes shall be sealed at ring joints.

B. Walls alternatively may be sealed against leakage by a heavy brush coat application of an approved waterproofing compound, mixed and applied in accordance with manufacturer's recommendations. Not less than 50 pounds of compound shall be used on each 125 square feet of exterior surface area, and the coverage of block and joints shall be continuous and uniform. Joints must be struck and troweled flush and dried for at least twenty-four (24) hours under good curing conditions, before seal coat is applied.

3.06 ADJUSTMENTS TO EXISTING UTILITY STRUCTURES

A. Adjust structures as indicated on the Drawings using concrete or cast iron adjustment rings by approved methods.

B. Clean covers and inlet castings of all foreign material and paint with one coat of coal tar epoxy.

3.07 ADJUSTING COLLARS AND FINAL ADJUSTMENTS

A. Adjusting collars shall be as shown on the Drawings. Final adjustments shall be made so that the manhole ring and cover will be smooth and flush with the finished grade of the adjacent surface, or as otherwise indicated on the Drawings for manholes shown above grade.

3.08 LEAKAGE TESTING FOR MANHOLES

A. All manholes shall be vacuum tested as specified below.

B. Manhole vacuum testing shall include the following minimum requirements:

C. Testing shall be done in accordance with ASTM C1244-05 (or latest revision).

D. Prior to testing all pipes, holes, and vents entering manhole shall be plugged and braced.

E. Contractor shall have an approved test head and copy of instructions for use by the

manufacturer.

F. Test will be conducted with Pinellas County potable water.

3.09 FLUSHING AND TESTING OF SEWERS

A. Obstruction – After backfilling, all sewers shall be inspected for obstructions and shall be flushed with water. Flushing shall be a minimum velocity of 2.5 feet per second for a duration acceptable to the Engineer. Flushing shall remove all dirt, stones, pieces of wood and other debris which accumulated in the sewer during construction. The Contractor shall provide a means acceptable to the Engineer for removal of debris flushed from each section of sewer. If after flushing, any obstructions remain, they shall be removed at the Contractor's expense.

B. Visual Inspection – All pipe lines of 8 inch or larger shall be CCTVed. All piping shall be laid, true to lines and grades given, with hubs (bells) upgrade and tongue end (Spigot) fully entered into the hub (homed). Do not allow departure from and return to plan alignment and grade to exceed 1/16th of an inch per foot of nominal pipe length, with total of not more than 1” inch departure from theoretical line and grade. Mirror inspections are acceptable for lines 6-inch and smaller. For lines 8-inch and larger, CCTV inspection are required.

C. Leakage – Sewers shall be tested for leakage. The program of testing shall fit the conditions as mutually determined by the Engineer and the Contractor. The Contractor shall take all necessary precautions to prevent any joints from drawing while the sewers or their appurtenances are being tested. The Contractor shall, at his own expense, correct any excess leakage and repair any damage to the pipe and their appurtenances, or to any structures resulting from or caused by these tests.

D. Leakage Test Procedure – Each section of sewer shall be tested by closing the lower end of the sewer to be tested and the inlet sewer of the upper manhole with stoppers and filling the pipe and manhole with water to a point 6 feet above the crown of the open sewer in the upper manhole, or, if ground water is present, 6 feet above the sections average adjacent ground water level as indicated by a monitor well installed adjacent to each manhole. The line shall be filled with water prior to testing and allowed to stand until the pipe has reached its maximum absorption, but not less than two (2) hours. After maximum absorption has been reached, the head shall be reestablished and tested for at least six (6) hours maintaining the head specified above by measured additions of water. The sum of these additions shall be the leakage for the test period.

   1. If ground water is present to a height of at least 6 feet above the crown of the sewer at the upper end of the pipe section to be tested, the leakage test may be made by measuring the rate of infiltration using a suitable weir or other measuring device approved by the Engineer. Whether the test is made by infiltration or exfiltration, the allowable leakage shall not exceed 100 gallons per day per inch of diameter per mile of sewer being tested.

   2. Where the actual leakage exceeds the allowable, the Contractor shall discover the cause and correct it before the sewer will be accepted. For the purpose of this subsection, a section of sewer is defined as that length of sewer between successive manholes or special structures or stub-outs for future connections.

E. Low Pressure Compressed Air Test – If the leakage cannot be located by infiltration or exfiltration testing, this type test may be used. The pipeline shall be considered acceptable, when tested at an average pressure of 3.0 psi greater than the average back pressure of any groundwater that may submerge the pipe, if the section under test does not lose air at a

rate greater than 0.0030 cfm per sq. ft. of internal pipe surface.

F. Deflection Test – No sooner than thirty (30) days after final backfill installation, each section of PVC pipe shall be checked for vertical deflection using an electronic deflectometer or a rigid "GoNoGo" device. Vertical deflection shall not exceed five (5) percent of the inside pipe diameter for PVC pipe.

   1. Where the actual deflection exceeds the allowable, the Contractor shall discover the cause and correct it before the pipe will be acceptable. For the purpose of this subsection, a section of sewer is defined as that length of sewer between successive manholes or special structures or stubouts for future connections.

   2. Cost of Testing and Repairs – Any and all work necessary to bring the line into conformance with the infiltration and deflection specifications shall be performed by the Contractor at no extra cost to the Owner. All apparent sources of infiltration and excessive deflection shall be repaired by the Contractor.

G. The Contractor shall provide all water, plugs, hoses, pumps, equipment, etc. necessary for the proper flushing and testing of the sewers.

[END OF SECTION]

SECTION 02607

MANHOLE HEIGHT ADJUSTMENT

PART 1 GENERAL

1.01 GENERAL

A. Furnish all materials, labor, equipment, tools, and incidentals required to adjust the height of manholes in accordance with the Drawings and as specified herein.

1.02 REFERENCE SPECIFICATIONS, CODES, AND STANDARDS

A. Without limiting the generality of the other requirements of the Specifications, all work herein shall conform to the applicable requirements of the following documents. All referenced specifications, codes, and standards refer to the most current issue available at the time of Bid.

B. ASTM C478 Standard Specification for Precast Reinforced Concrete Manhole Sections

C. ASTM D149 Standard Test Method for Dielectric Breakdown Voltage and Dielectric Strength of Solid Electrical Insulating Materials at Commercial Power Frequencies

D. ASTM D256 Standard Test Methods for Determining the Izod Pendulum Impact Resistance of Plastics

E. ASTM D570 Standard Test Method for Water Absorption of Plastics

F. ASTM D638 Standard Test Method for Tensile Properties of Plastics

G. ASTM D648 Standard Test Method for Deflection Temperature of Plastics Under Flexural Load in the Edgewise Position

H. ASTM D790 Standard Test Methods for Flexural Properties of Unreinforced and Reinforced Plastics and Electrical Insulating Materials

I. ASTM D955 Standard Test Method of Measuring Shrinkage from Mold Dimensions of Thermoplastics

J. ASTM D1000 Standard Test Methods for Pressure-Sensitive Adhesive-Coated Tapes Used for Electrical and Electronic Applications

K. ASTM D1002 Standard Test Method for Apparent Shear Strength of Single-Lap-Joint Adhesively Bonded Metal Specimens by Tension Loading (Metal-to-Metal)

L. ASTM D1044 Standard Test Method for Resistance of Transparent Plastics to Surface Abrasion

M. ASTM D2240 Standard Test Method for Rubber Property – Durometer Hardness

N. ASTM D2671 Standard Test Methods for Heat-Shrinkable Tubing for Electrical Use

O. ASTM D4976 Standard Specification for Polyethylene Plastics Molding and Extrusion Materials

P. ASTM E28 Standard Test Methods for Softening Point of Resins Derived from Naval Stores by Ring-and-Ball Apparatus

Q. ASTM G17 Standard Test Method for Penetration Resistance of Pipeline Coatings (Blunt Rod)

1.03 SUBMITTALS

A. The Contractor shall submit the following shop drawings and product data in accordance with requirements of Section 01300 – Submittals:

1. Proposed method of height adjustment for each manhole to be adjusted in height

2. Design and construction details of all manhole grade rings, including details of joints between grade rings and existing manhole top cone/slab and between grade rings and existing cover and frame, all with clearly marked dimensions

3. Design and construction details of all precast concrete manhole components (riser sections and top cones), including materials, reinforcement, and details of joints between manhole components and existing manhole components, all with clearly marked dimensions

4. Manufacturer's installation instructions, procedures, and materials for external manhole sleeves

5. Manufacturer's certification indicating external manhole sleeves are manufactured in an ISO 9002 registered facility

1.04 QUALITY ASSURANCE

A. External Manhole Sleeve Manufacturer Qualifications:

1. External manhole heat-shrink sleeves shall be manufactured in an ISO 9002 registered facility.

2. Manufacturer shall have the capability of producing irradiated and cross-linked polyethylene coating to allow shrinking of coating material in circumferential direction under influence of heat.

3. Manufacturer shall have the capability of providing manufacturer-employed field service personnel for onsite assistance as required.

B. External Manhole Sleeve Installer Qualifications:

1. Installer shall be experienced with installation techniques.

2. Installer shall have attended a minimum of one (1) day of training at the external manhole sleeve manufacturer's facility or onsite with the external manhole sleeve manufacturer's representative.

C. Pre-Installation Meeting: External manhole sleeve manufacturer's representative and external manhole sleeve installer shall attend a pre-installation meeting with the Contractor and Engineer one (1) week prior to the start of installation of the initial external manhole

sleeve. At the meeting, the attendees shall review surface preparation, installation, field quality control, backfilling, protection, and coordination with other work.

1.05 DELIVERY, STORAGE, AND HANDLING

A. External Manhole Sleeve Delivery:

1. Deliver materials to site in manufacturer's original, unopened containers and packaging, with labels clearly identifying product name, manufacturer, batch or lot number, and date of manufacture.

2. Protect individual sleeves to prevent adherence to other sleeves, packing material, and containers in accordance with manufacturer's instructions.

B. External Manhole Sleeve Storage:

1. Store materials in accordance with manufacturer's instructions.

2. Keep containers sealed until ready for use.

3. Do not store at temperatures above 95 degrees Fahrenheit (35 degrees Celsius) or below -4 degrees Fahrenheit (-20 degrees Celsius).

4. Protect materials and containers from exposure to direct sunlight, rain, snow, dirt, and dust.

5. Store materials off ground or floor in ventilated area.

C. External Manhole Sleeve Handling: Protect materials during handling and installation to prevent damage or contamination in accordance with manufacturer's instructions.

D. Delivery, storage, and handling of all other materials specified herein, other than the external manhole sleeves, shall be in accordance with the manufacturer's requirements.

1.06 WARRANTY

A. Warranty period for high density polyethylene (HDPE) and concrete grade rings shall be for five (5) years from the date of acceptance.

PART 2 PRODUCTS

2.01 MANHOLE GRADE RINGS

A. Round manhole grade rings shall be used to set manhole frames to their required elevations by methods approved by the Owner and/or Engineer. Manhole grade rings shall be composed of either precast concrete or high density polyethylene (HDPE).

1. All manhole grade rings shall be composed of precast concrete in accordance with ASTM C478 and Section 03400 – Precast Concrete.

B. All manhole grade rings shall be of approved design and of sufficient strength to withstand the typical loads that will be imposed upon them after installation. For manholes located in pavement that are adjusted in height, manhole grade ring shall be rated for an AASHTO live HS-20 traffic load at a minimum.

C. Prior to reinstallation of an existing manhole cover and frame, Contractor shall clean cover and frame of all foreign material and shall paint cover and frame with one (1) coat of coal tar epoxy.

2.02 PRECAST CONCRETE MANHOLE COMPONENTS

A. Precast concrete manhole components (riser sections or top cones) shall be used to set manhole frames to their required elevations by methods approved by the Owner and/or Engineer in accordance with Section 02604 – Utility Structures.

2.03 JOINT GASKET AND WATERSTOP

A. Joints between manhole components, grade rings, and covers and frames shall be sealed as follows:

1. Existing Top Cone/Slab and New Precast Concrete Manhole Grade Ring: Waterstop

2. Adjacent New Precast Concrete Manhole Grade Rings: Waterstop

3. New Precast Concrete Manhole Grade Ring and Existing (Reinstalled) Manhole Cover and Frame: Waterstop

4. Existing Precast Manhole Component (Riser Section or Top Cone) and New Precast Manhole Component (Riser Section or Top Cone): Gasket and waterstop

5. Pre-lubricated profile gaskets and hydrophilic waterstop rings shall be as specified in Section 02604 – Utility Structures.

2.04 GASKETS

A. Gaskets between covers and frames shall be in accordance with the requirements of Section 02604 – Utility Structures.

1. Prior to reinstalling an existing manhole cover and frame, Contractor shall install a new gasket between the cover and frame in accordance with the gasket manufacturer's recommendations. Gaskets shall be secured to the seating surface of the frame with a non-degrading glue as recommended by the gasket manufacturer.

2. New manhole covers and frames shall be shipped from the factory with gaskets already installed in the seating surface of the frame.

2.05 EXTERNAL MANHOLE SLEEVES

A. Heat-shrinkable, wrap around sleeves shall be provided on the exterior of manholes to create a barrier to water infiltration and effectively protect the manholes' support structures and frames from ground moisture, thus preventing corrosion and freeze-thaw damage. Sleeves shall accommodate ground movement and resist soil stress. External manhole sleeves shall be WrapidSeal Manhole Encapsulation System by Canusa-CPS (a division of ShawCor Inc.), Riser-Wrap Sealing System by Pipeline Seal and Insulator, Inc. of Houston, TX, or Engineer-approved equal.

1. Material: Irradiated and cross-linked polyethylene impermeable backing, coated with a protective heat-activated adhesive

2. Bonding: Bond to primed concrete, metal, and fiberglass surfaces

3. Compatibility: Compatible with concrete, steel, iron, and fiberglass

4. Closure: Separate closure seal to secure sleeve in place during installation and seal overlap area

5. Functional Performance of Heat-Shrinkable Sleeves:

    a. Minimum Peel Strength per ASTM D1000: 9 pounds/linear inch (15 N/cm)

    b. Lap Shear per ASTM D1002: 1.5 psi (1.0 N/cm2)

    c. Maximum Water Absorption per ASTM D570: 0.05 percent

    d. Low Temperature Flexibility per ASTM D2671: -40 degrees Fahrenheit (-40 degrees Celsius)

    e. Penetration Resistance per ASTM G17: Pass

6. Physical Properties of Heat-Shrinkable Sleeves:

    a. Type: High shrink

    b. Supplied Thickness: 101 mils (2.5 mm)

    c. Fully Recovered Thickness: 125 mils (3.2 mm)

    d. Minimum Shrink Factor: 40 percent

7. Sleeve Adhesive:

    a. Minimum Softening Point per ASTM E28: 212 degrees Fahrenheit (100 degrees Celsius)

    b. Minimum Lap Shear Strength per ASTM D1002: 12 psi (8 N/cm2)

8. Sleeve Backing:

    a. Minimum Tensile Strength per ASTM D638: 2,900 psi (20 MPa)

    b. Minimum Elongation per ASTM D638: 600 percent

    c. Minimum Hardness per ASTM D2240: 46 Shore D

    d. Abrasion Resistance per ASTM D1044: 45 mg

    e. Shrink Force per ASTM D638: 38 psi (26 N/cm2)

    f. Dielectric Strength per ASTM D149: 500 KV/inch (20 KV/mm)

9. Primer shall be suitable for priming steel, concrete, and fiberglass surfaces for installation of sleeve, shall be compatible with common substrates and sleeve adhesive, and shall be the WrapidSeal Manhole Encapsulation System primer, Polyken #1027 or #1039

liquid adhesive primers for Riser-Wrap Sealing System, or as recommended by the equivalent external manhole sleeve manufacturer.

PART 3 EXECUTION

3.01 MANHOLE ENTRY

A. The Contractor shall exercise extreme caution during any manhole entry operations on live sewer lines. Particular attention shall be paid while working on larger diameter sewers. The Contractor shall implement all necessary safety precautions, in accordance with OSHA regulations, to give maximum protection at all times to persons or property at or near the work area.

3.02 MANHOLE GRADE RINGS AND PRECAST MANHOLE COMPONENTS

A. Manhole grade rings or precast manhole components shall be used for all precast concrete manholes to adjust the height of the manhole frame casting where required. If the Contractor locates and uncovers an existing manhole composed of masonry/brick, Contractor shall notify the Engineer, who shall instruct the Contractor how to proceed with adjusting the height of the masonry/brick manhole.

1. Individual grade rings shall be a maximum of 10 inches in height and shall be installed on the existing top cone/slab of the manhole to be adjusted in height after removal of the existing manhole cover and frame. The existing manhole cover and frame shall subsequently be reinstalled on top of the grade rings.

2. The height of the grade ring(s) shall be such as is necessary to bring the manhole frame to the proper grade.

3. HDPE rings shall be used for grade adjustment from 2 inches to a maximum of 6 inches in height.

4. Precast concrete rings shall be used for grade adjustments 4 inches to a maximum of 12 inches in height.

5. Precast concrete manhole components (riser sections or top cones) with joints in accordance with Section 02604 – Utility Structures shall be used for grade adjustment measuring 16 inches and greater.

6. For all grade adjustments using a precast concrete riser section, the existing top cone/slab with cover and frame shall be removed and then reinstalled after installation of the new riser section.

7. For all grade adjustments using a precast concrete top cone, the existing top cone/slab with cover and frame shall be removed and properly disposed of and a new top cone with new cover and frame shall be installed. New frames shall be attached to the new top cone using four (4) 5/8-inch diameter stainless steel.

8. Rings shall be set concentrically on top of the existing top cone/slab.

9. The joints of all precast concrete manhole grade rings, HDPE grade rings, and precast concrete manhole components (riser sections or top cones) shall be sealed in accordance with Article 2.03 herein.

10. Manhole grade rings and precast concrete manhole components shall be installed in accordance with the manufacturer's recommendations.

B. Existing casting frames shall be reinstalled on the new grade ring(s).

3.03 PROCEDURES FOR MANHOLE HEIGHT ADJUSTMENT

A. Height adjustment of manholes shall conform to the Owner's standards as noted herein and as shown on the drawings.

B. The Contractor shall utilize maps, surveys, sounding instruments, or information from local residents to determine approximate location of buried manholes. Manholes shall be exposed utilizing hand techniques or by carefully probing with mechanical equipment. Manhole exposure in pavement shall be accomplished by making a square cut in the surface with sufficient width to allow for the excavation of the material around the manhole to expose it to a depth necessary for adequate adjustments.

C. The Contractor shall adjust the top of the manhole frame to its required elevation as directed by the Owner or Engineer using manhole grade rings or precast manhole components (riser sections or top cones) conforming to the requirements of this Section. For manholes located in unpaved areas (lawns, wooded areas, other inaccessible areas, etc.), their frames and covers shall be adjusted to be either two (2) feet above the surrounding ground surface or as otherwise directed by the Owner and/or Engineer. For manholes located in pavement (roads, parking lots, sidewalks, etc.), their frames and covers shall be adjusted to be smooth and flush with the finished grade of the adjacent pavement, and sloping grade rings shall be provided as required to match the surrounding road grade if necessary.

1. Both reinstalled covers and frames and new covers and frames shall be positioned so the existing manhole steps can be readily and easily accessed.

D. Existing Concrete Manholes Located in Pavement: All adjustments measuring less than 12 inches shall be performed using manhole grade rings. All adjustments measuring 12 inches and greater shall be performed using only precast manhole components by one of the following methods:

1. Removing the existing top cone/slab with cover and frame, installing a new appropriate precast manhole riser section, and reinstalling the existing top cone/slab with cover and frame

2. Removing and properly disposing of the existing top cone/slab with cover and frame and installing a new appropriate precast manhole top cone with new cover and frame

E. Existing Concrete Manholes Located in Unpaved Areas: All adjustments shall be performed using only precast manhole components by one of the previous methods.

F. Contractor shall be solely responsible for the proper height of all manholes necessary to reach the final grade at all locations. Contractor is cautioned that Engineer's review of shop drawings for manhole grade rings and precast manhole components will be general in nature, and Contractor shall provide an adequate supply of random length manhole grade rings and precast manhole components to adjust any manhole to meet field conditions for final grading.

G. Contractor shall also install an external manhole sleeve as specified herein for the following existing manholes that are adjusted in height by the Contractor:

1. Manholes adjusted in height under this Project using either precast concrete grade rings

2. Manholes that have been previously rehabilitated prior to this Project

3. Manholes adjusted in height under this Project using new precast concrete top cones and new covers and frames.

External manhole sleeve shall cover the exterior of the existing manhole frame (after re-installation) or new manhole frame (after installation), the new grade rings (if installed), and the upper portion of the existing or new manhole top cone/slab as recommended by the manufacturer. Size and width of external manhole sleeve shall be as recommended by the manufacturer.

H. After a manhole is adjusted in height as specified herein, Contractor shall backfill the area around the existing manhole in accordance with Section 02200 – Earthwork.

1. Manholes Located in Unpaved Areas: After backfilling, the portion of the surrounding ground surface that is disturbed during height adjustment shall be graded at a 1:5 (1 vertical to 5 horizontal) slope to provide surface drainage away from the manhole and subsequently grassed in accordance with Section 02910 – Final Grading and Landscaping.

2. Manholes Located in Pavement: After backfilling, the portion of the surrounding ground surface that is disturbed during height adjustment shall be repaved in accordance with Section 02575 – Pavement Repair.

3.04 EXTERNAL MANHOLE SLEEVES

A. Examination: Examine surfaces to receive external manhole sleeve. Notify the Engineer if surfaces are not acceptable. Do not begin surface preparation until unacceptable conditions have been corrected.

B. Surface Preparation:

1. Prepare surfaces in accordance with manufacturer's instructions.

2. Brush exterior of manhole using broom or hand wire tools to ensure surfaces are clean, dry, and free of loose cement, dust, small rock particles, frost, surface rust, foreign objects, sharp edges, and projections that could damage external manhole sleeve.

3. Cleaned surfaces of precast manhole components and grade rings shall not remain overnight or for extended periods under wet or humid conditions prior to the application of the external manhole sleeve.

4. Inspection by Owner and/or Engineer:

a. Give the Owner and/or Engineer a minimum of twenty-four (24) hours advance notice of start of installation of external manhole sleeve at any specific manhole.

b. Before installation, surfaces to be covered by the external manhole sleeve will be inspected by the Owner and/or Engineer.

c. Do not begin installation until defects or deficiencies identified by the Owner and/or Engineer have been corrected.

C. Installation:

1. Install external manhole sleeve in accordance with manufacturer's instructions.

2. Install sleeve to create barrier to water infiltration and protect manhole support structure and frame from ground moisture, preventing corrosion and freeze-thaw damage.

D. Field Quality Control:

1. Sleeve Inspection: Visually inspect installed sleeve to ensure:

   a. Sleeve is in full contact with substrate, including top cone/slab, grade rings (if installed), and manhole frame

   b. There are no cracks or holes in polyethylene backing

   c. There are no voids below sleeve

   d. Adhesive has flowed beyond sleeve edges

2. Site Adhesion Testing: Peel tests

   a. Frequency of Test: 1 in every 10 sleeves

   b. Surface Temperature at Time of Test: 77 degrees Fahrenheit +/- 10 degrees Fahrenheit (25 degrees Celsius +/- 5 degrees Celsius), unless environmental conditions will not allow and continuation of test is approved by the Engineer

   c. Peel Rate: 4 inches/minute (100 mm/minute)

   d. Perform testing using hand peel gauge on 1-inch (25-mm) wide strip.

   e. Cut strip and induce initial failure by undercutting and peeling back strip until 2-inch (50-mm) flap is created.

   f. Attach clamp to strip and hand peel gauge to clamp and peel back at a 90 degree angle to surface at specified peel rate.

   g. Passing Minimum Peel Strength: 8.6 pounds/linear inch (15 N/cm) with cohesive failure of adhesive

3. Contractor shall be responsible for verifying the integrity of the installed external manhole sleeve prior to proceeding with backfilling. Damaged sleeves shall be repaired in accordance with the manufacturer's recommendations at the Contractor's expense.

E. Backfilling and Protection:

1. Allow sleeve to cool before backfilling manhole. Water quenching shall be permissible to expedite backfilling.

2. Prevent damage to sleeve by backfilling with select backfill or material with no sharp stones or large particles, or protect sleeve with extruded polyethylene mesh or other suitable protective shield as approved by the Engineer.

3. Backfill manhole as specified in Section 02200 – Earthwork.

[END OF SECTION]

SECTION 02710

UNDERDRAINS, STORM DRAINS AND ROOF DRAINS

PART 1 – GENERAL

1.01 GENERAL REQUIREMENTS

A. Furnish all labor, equipment and materials in connection with the installation and testing of exterior underground Storm drains and Roof drains as shown on the Contract Drawings and specified herein.

1.02 RELATED WORK SPECIFIED ELSEWHERE

A. Section 02100 – Clearing and Grubbing

B. Section 02222 – Excavation and Backfill for Utilities

1.03 REFERENCE SPECFICATIONS, CODES AND STANDARDS

A.	ASTM C76	Standard Specification for Reinforced Concrete Culvert, Storm Drain, and Sewer Pipe
B.	ASTM C361	Standard Specification for Reinforced Concrete Low-Head Pressure Pipe
C.	ASTM C443	Standard Specification for Joints in Concrete Pipe and Manholes, Using Rubber Gaskets
D.	ASTM C478	Standard Specification for Precast Reinforced Concrete Manhole Sections
E.	ASTM C857	Minimum Structural Design Loading for Underground Precast Concrete Utility Structures
F.	ASTM C969	Standard Practices for Infiltration and Exfiltration Testing of Installed Precast Concrete Pipe Sewer Lines
G.	ASTM C990	Standard Specification for Joints in Concrete Pipe, Manholes, and Precast Box Sections Using Preformed Flexible Joint Sealants
H.	ASTM C1103	Standard Practice for Joint Acceptance Testing of Installed Precast Concrete Pipe Sewer Lines
I.	ASTM C1619	Standard Specification for Elastomeric Seals for Joining Concrete Structures
J.	ASTM C1628	Standard Specification for Joints for Concrete Gravity Flow Sewer Pipe, Using Rubber Gaskets
K.	ASTM D 2321	Standard Practice for Underground Installation of Thermoplastic Pipe for Sewers and other Gravity-Flow Applications.

L.	ASTM D 3350	Standard Specifications for Polyethylene Plastic Pipe and Fitting Material.
M.	AWWA C 110	Standard Specification for Ductile Iron Pipe & Fittings for Water and Other Liquids.
N.	ASTM C 150	Standard Specification for Portland Cement
O.	AWWA C 151	American National Standard for Ductile-Iron Pipe, Centrifugally Cast, for Water.
P.	ASTM F 447	Standard Specifications for Elastomeric Seals (Gaskets) for Joining Plastic Pipe.
Q.	AASHTO R82-17	
R.	AASHTO M 198	Standard Specification for Joints for Concrete Pipe, Manholes, and Precast Box Sections Using Preformed Flexible Joint Sealants
S.	AASHTO M 294	Standard Specifications for Corrugated Polyethylene Pipe (12” to 36”).
T.	AASHTO Section 30	Thermoplastic Pipe.

1.04 SUBMITTALS

A. Submit the following in accordance with Section 01300 – Submittals.

1. Submit shop drawings for underdrain pipe, storm drain pipes and culverts, roof drains, filter fabric, filter aggregate.

2. Special care shall be exercised during delivery, distribution and storage of the pipe and fittings to prevent damage. Damaged pipe will be rejected and shall be replaced at the Contractor's expense. Storage of pipe and fittings, prior to use, shall be in such a manner as to keep the materials clean and dry.

PART 2 – PRODUCTS

2.01 REINFORCED CONCRETE PIPE (RCP) – STORM DRAINS AND CULVERTS

A. Pipe and Joints

1. Reinforced concrete pipe for storm drains and culverts shall conform to ASTM Standard C76, Class III, Wall thickness B, unless otherwise noted on the Contract Drawings. Elliptical reinforcement will not be permitted. All pipe shall be aged at the manufacturing plant for at least fourteen (14) days before delivery to the job site. All pipe shall be of the sizes indicated on the drawings

2. Pipe joints shall be designed per ASTM C-443-19a and ASTM C-1628 –19. Pipe shall be provided with bell and spigot ends.

B. Gaskets

1. Gaskets shall be leak-resistant with elastomeric seals (gaskets) made of natural rubber, synthetic rubber, or a blend of both meeting the physical requirements prescribed in Specification ASTM 1619-19 for Class A, C, or E gaskets.

2. Gaskets showing prior use or damage will be rejected. If gasket shows signs of wear or cracking, a replacement shall be provided at no additional cost.

C. Joint Lubricant

1. Joint lubricant shall be of the type recommended by the manufacturer. Use of petroleum-based lubricants is not permitted.

2.02 Ductile Iron Pipe (DIP) – ROOF DRAINS

A. Pipe

1. Shall be centrifugally cast in metal molds or sand lined molds in accordance with ANSI A21.51 (AWWA C151) of grade 70 50 05 ductile iron. The above standard covers ductile iron pipe with nominal pipe sizes from three (3) inches up to and including fifty four (54) inches in diameter.

2. Shall have a rated working pressure of 150 psi.

3. Shall be a minimum PC 150.

B. Fittings

1. Shall be manufactured in accordance with ANSI A21.10 (AWWA C110).

2. Shall be manufactured of grade 70-50-05 ductile iron.

3. Shall have a rated working pressure of 250 psi.

4. Grey iron fittings which conform to the specifications contained herein may be used with ductile iron pipe providing the piping systems minimum working pressure is met or exceeded, and only where ductile iron fittings are not manufactured for a specific fitting.

C. Coatings and Linings for Pipe and Fittings

1. Protecto 401 asphaltic coating shall be applied to the exterior wall of the pipe and fittings in accordance with ANSI A21.51 (AWWA C151).

2. The pipe and fittings shall be cement mortar lined to twice the standard thickness in accordance with ANSI A21.4 (AWWA C104) except as specified in the pipe schedule. A seal coat of Protecto 401 shall be applied to the mortar lining.

D. Joints

1. Joints shall be push on type in accordance with ANSI A21.11 (AWWA C111).

2.03 SMOOTH LINED CORRUGATED HIGH-DENSITY (HDPE) POLYETHYLENE PIPE - STORM DRAINS AND CULVERTS

A. General

1. Smooth lined corrugated high-density polyethylene (HDPE) pipe shall be used for storm drains and shall be BLUE SEAL watertight HDPE pipe as manufactured by Hancor, Inc., N-12 WT IB (Watertight) Pipe by ADS, Inc., or approved equal.

B. Pipe and Fittings

1. Smooth lined HDPE pipe and fittings shall conform to AASHTO M252-TYPE S for 4" to 10" diameter and AASHTO M294 - TYPE S for 12" to 36" diameter. All pipes shall be of the sizes indicated on the drawings.

C. Joints

1. Joints shall be watertight bell and spigot type; Hancor, Inc. BLUE SEAL, ADS, Inc. N-12 WT IB, or approved equal.

D. Foundation Drains

1. Foundation drains shall conform to AASHTO M252-TYPE C. Drains shall have drilled perforations and be Heavy Duty-AASHTO Pipe as manufactured by Hancor, Inc., Single Wall Corrugate Pipe by ADS, Inc., or approved equal.

2.04 BACKFILL MATERIAL

A. The material obtained from excavation of the pipe trench or elsewhere on site with a particle size not greater than 3 inches shall be used for pipe backfill if they conform with the soil classes given in Table 1. Imported materials meeting the criteria of Table 1 may also be used.

TABLE 1 – ACCEPTABLE BACKFILL MATERIAL

SOIL CLASSIFICATIONS			
DESCRIPTION	ASTM D 2321	ASTM D 2487	AASHTO M 43
Graded or crushed, crushed stone, gravel	Class I	--	5 56
Well-graded sand, gravels and gravel/sand mixtures, poorly graded sand, gravels and gravel/sand mixtures; little or no fines	Class II	GW GP SW SP	57 6
Silty or clayey gravels, gravel/sand/silt or gravel and clay mixtures; silty or clayey sands, sand/clay or sand/silt mixtures	Class III	GM GC SM SC	Gravel and Sand (<10% fines)

2.05 UNDERDRAIN PIPE

A. Pipe for use as underdrain shall be 6" diameter minimum, perforated PVC, per ASTM F758, F949, or equal.

B. Pipe shall be perforated per manufacturers specifications and shall be 3/16” to 3/8” in size.

2.06 FILTER FABRIC

A. Filter fabric shall be non-degrading fibrous filter type material, Mirafi 140 N or approved equal.

2.07 FILTER AGGREGATE

A. Aggregate shall be as specified in the F.D.O.T. standard specifications, section 901, and shall be size 57.

PART 3 – EXECUTION

3.01 INSPECTION

A. Each length of pipe and fittings delivered to the property shall be inspected by the Contractor, in the presence of the Engineer, for flaws, cracks, dimensional tolerances and compliance with the referenced Standards. The Contractor shall provide the Engineer with suitable templates or calipers for checking pipe dimensions. Only lengths of pipe and fittings accepted by the Engineer and so marked may be installed in the work.

3.02 INSTALLATION

A. Trenching, bedding and backfilling shall be as specified in Section 02200 - Earthwork of these Specifications and Section 2.04 Backfill Material of this Specification. Under no condition shall pipe be laid in water or when trench conditions or weather are unsuitable for such work.

B. The trench shall be excavated carefully, to such depth to allow for the installation of the filter fabric, filter aggregate, and PVC underdrain pipe as shown in the plans.

C. All pipes and fittings shall be handled carefully in loading and unloading. They shall be lifted by hoists or lowered on skidways in such a manner as to avoid shock. Derricks, ropes or other suitable equipment shall be used for lowering the pipe into the trench. Pipe and fittings shall not be dropped or dumped.

D. Each pipe and fitting shall be inspected before it is lowered into the trench. The interior of the pipe and all joint surfaces shall be thoroughly cleaned and shall thereafter be maintained clean. The open ends of pipe shall be securely plugged whenever pipe laying is not in progress.

E. Pipe and fittings shall be selected so there will be as small a deviation as possible at the joints and so inverts present a smooth surface. All joints shall be installed, made up, and inspected in accordance with approved printed instructions of the manufacturer. Pipe and fittings which do not fit together to form a tight joint will be rejected.

F. Cutting of reinforced concrete pipe will be permitted only at connections to structures and be accomplished by abrasive saws. Cutting of other pipe materials shall be done only with mechanical cutters and in accordance with the manufacturer's recommendations.

G. Lay all pipe, true to the lines and grades give, with hubs (bels) upgrade and tongue end (spigot) fully entered into the hub (homed). Do not allow departure from the return to plan alignments and grade to exceed 1/16 inch per foot of nominal pipe length with total of not more than 1 inch departure from theoretical line and grade.

H. If an adequate foundation for the pipe is not available at the desired depth, additional excavation shall be required, and the foundation brought to desired grade with suitable granular material.

I. Rock outcroppings, very soft soils such as muck, and other similar materials not providing proper foundation support shall be removed/replaced with suitable granular material.

J. Structures shall be bedded a minimum of 1 foot below and 1 foot around pipe. Piping shall be laid in a dry or dewatered trench line. Place rock bedding material under piping to stabilize at a minimum of 6 inches.

K. Class I materials may be dumped around pipe. Voids shall be eliminated by knifing under and around the pipe or by other approved technique.

L. Inorganic silts, and gravelly, sandy, or silty clays, and other Class IV materials (not shown in Table 1) shall not be used for pipe backfill.

M. Any section of the pipe found defective in material, alignment, grade, joints, or otherwise, shall be satisfactorily corrected by the Contractor at no additional cost to the Owner.

N. After the pipe has been laid and approved by the Engineer, the trench shall be backfilled with the filter aggregate to the depth shown on the plans and the filter fabric shall overlap no less than 18" across the top of the aggregate.

O. For underdrain installation in the roadway, backfill in the trench above the underdrain system, shall be ready-mixed flowable fill as per Section 2224 of the specifications.

3.03 COMPACTION

A. General

1. Place and assure backfill and fill materials achieve an equal or higher degree of compaction than undisturbed materials adjacent to the work.

2. In no case shall degree of compaction below “Minimum Compactions” specified be accepted.

B. Compaction Requirements: Unless noted otherwise on the Drawings or more stringently by other sections of these Specifications, comply with following trench compaction criteria:

TABLE 2 – - MINIMUM COMPACTIONS

LOCATION	SOIL TYPE	DENSITY
1. Compacted select backfill:		
All applicable areas	Cohesive soil	98 percent of maximum dry density by ASTM D698
	Cohensionless soils	75 percent of maximum relative density by ASTM D4253 and ASTM D4254
2. Common trench backfill:		
Under pavements roadways surfaces, D698 within highway right-of-	Cohesive soils	98 percent of maximum dry density by ASTM D698

ways, adjacent to retaining walls		
	Cohensionless soils	75 percent of maximum relative density by ASTM D4253 and ASTM D4254
Under turfed, sodded plant seeded, non-traffic areas	Cohesive soils	95 percent of maximum dry density by ASTM D698
	Cohensionless soils	75 percent of maximum relative density by ASTM D4253 and ASTM D4254

C. Ensure backfill materials have moisture content within one (1) percent of optimum moisture content at the time of placement.

3.04 INSPECTION AND TESTING

A. General

1. The Contractor shall provide at his own expense, all labor, material, video and measuring devices, water, plugs, or other equipment necessary to perform the required tests. All tests shall be performed in the presence of the Engineer. Disposal of water shall be in accordance with Section 01010 – Summary of Work.

B. Tests by Manufacturer

1. Reinforced Concrete Storm Drains and Culverts - An infiltration and exfiltration test for the pipe shall be made at the place of manufacture. Certified test results shall be submitted. The infiltration or exfiltration allowance shall not exceed the limits as set in the “Performance requirements for Joints” paragraph in ASTM C443 – 12 (2017) or ASTM C990-09 (2014), depending on the type of gasket specified.

2. DIP and HDPE - An infiltration and exfiltration test for the pipe shall be made at the place of manufacture. Certified test results shall be submitted. The infiltration or exfiltration allowance shall not exceed 250 gallons per inch of pipe diameter per mile per day. One joint test for each two hundred feet of pipe to be furnished.

C. Field Test - Visual Inspection

1. Examine structures and pipes for:

a. Physical damage.

b. Indication of displacement of pipes or structures, reinforcement, forms, or bedding.

c. Porous areas or voids.

d. Proper placement of seals, gaskets, and embedments.

e. Visible infiltration.

2. Verify structures and pipes are set to proper line, grade as per the Contract Drawings, and are plumb.

3. Verify structure and pipe dimensions and thickness match Contract Drawings.

4. Measure inside dimensions of all flexible (HDPE) pipe prior to installation. Use these dimensions when sizing the mandrel should deflection testing be required.

    a. Using light to inspect pipe shall be done after pipe trench backfill is compacted and brought to grade or pavement base.

    b. Full pipe diameter shall be visible for entire length of each section between structures.

    c. No less than half pipe diameter shall be visible for horizontal alignment.

5. The Contractor shall be responsible to provide video recording of the all installed storm sewer systems at least 30 days after completion of backfill and one month before Owner or Engineer gives final acceptance for the two-year warranty. The recording shall be made using a color camera, self-propelled or other, having sufficient light to show detail of problem areas and joints. Camera speed shall not exceed 3 feet per second. If problems or concerns are seen by the operator, then the camera shall be reversed and an extended look at the area will be recorded. All recordings will have time, date, and footage displayed. Supplement the video recording with a written log or orally recorded tape log noting observations, findings, and deficiencies shown on the video tape.

    a. The video recording inspection shall be performed by an outside independent testing agency acceptable to the Owner or Engineer.

    b. The video tape and log will be given to the Engineer for review. If the Engineer finds any problems with the storm sewer, the Contractor will repair the problem and re-camera the repaired area before final acceptance will be given, at no added cost to the Owner.

    c. Video recording of storm sewer may be waived if pipe diameter is sufficient for human access, as determined by the Engineer. A log shall be developed for such inspection.

    d. One copy of the video tape and log will become permanent property of the Engineer and Owner as record.

D. Field Test - Manhole Testing

1. The finished manholes shall be as watertight as the pipe system of which it is part. See Specification 02604 – Utility Structures for manhole testing criteria.

2. Observed leaks (infiltration or exfiltration) at any time within the warranty period shall be cause for rejection.

E. Field Test - Storm Drains and Culverts less than 30” diameter

1. If, after the visual inspection and video recording of the storm trunk or lateral lines, the Engineer finds there is a potential joint tightness problem, or excessive deflection, and the Contractor does not agree to repairing defects in pipe based on visual inspection, he/she may require leakage testing of the line.

a. Reference ASTM C696, latest revision. Test shall be used if the groundwater level is less than 2 ft. above the crown of the pipe measured from the highest elevation of the pipe length being tested.

b. Leakage rate testing applies to only circular pipe less than 30”. The length of pipe tested shall not exceed 700 ft.

c. The leakage testing shall occur at least 30 days after completion of the backfilling and compaction.

d. If the Engineer determines reliable and uniform results are produced by the Contractor's construction techniques, the leakage testing may occur after initial backfill and compaction.

2. The Contractor shall provide all equipment and personnel to perform the leakage testing.

3. The Engineer shall record times and calculation leakage rates during the test period.

4. The leakage test shall be performed as follows:

a. Plug all pipe outlets discharging into the upstream manhole and the test section outlet. Fill the pipe with water.

b. At the upstream manhole the test head shall be established as minimum of 2 ft above the crown of the pipe, or at least 2 ft above existing groundwater, whichever is higher.

c. Allow the pipe to remain saturated for a period long enough to allow water absorption in the pipe, a minimum of 4 hours and up to a maximum of 72 hours. After the absorption period, refill the pipe to the required test head.

d. Measure the leakage loss over a timed test period. The minimum test period shall be 15 minutes and the maximum shall not exceed 24 hours.

5. The allowable leakage limit including manholes is 250 gal/(in. of internal diameter) (mile of sewer) (24 h) when the average head on the test section is 6 ft or less.

6. When the average head on the test section is greater than 6 ft, the allowable leakage shall be multiplied by the ratio of the square root of the average test head and the square root of the base head of 6 ft.

7. Manholes shall be tested separately and independently or with the pipeline with an allowance of 0.1 gal/(ft of diameter) (ft of head) (h).

8. Sections of the pipe which fail the air test, shall have the defects repaired, and the test shall be repeated.

a. The initial leakage testing, repair, and repeat testing of the failed section of pipe shall be repeated at no added cost to the Owner until the testing requirements are met.

F. Field Test - Storm Drains and Culverts 30” diameter and greater

1. If, after the visual inspection and video recording of the storm trunk or lateral lines, the Engineer finds there is a potential joint tightness problem, or excessive deflection, and the

Contractor does not agree to repair defects in pipe based in visual inspection, he/she may require air or water pressure testing of individual pipe joints.

a. Reference ASTM C1103, latest revision. The following procedures apply to testing with either air or water.

b. Pressure testing applies to only circular pipe 30” or greater and not elliptical, arch or box sections.

c. The pressure test shall occur at least 30 days after completion of the backfilling and compaction.

d. If the Engineer determines reliable and uniform results are produced by the Contractor's construction techniques, the pressure test may occur after initial backfill and compaction.

2. The Contractor shall provide all equipment and personnel to perform the pressure testing.

3. The Engineer shall record times and observe pressure losses during the test period.

4. If the groundwater pressure is equal to or greater than the test pressure, and the storm drain or joint is not leaking, the storm drain or joint is acceptable in accordance with ASTM C969 and no additional testing is required. If one or more joints are leaking, but the total amount of leakage in the storm drain being tested is equal to, or less than, the allowable leakage rate established in accordance with ASTM C969, the line is acceptable and no additional testing is required provided visible leaks are repaired. Moisture or beads of water appearing on the surface of the joint will not be considered as visible leakage.

5. The pressure test shall be performed as follows:

a. Move the joint test apparatus into the pipe to the joint to be tested and position it over the joint. The end element sealing tubes must straddle both sides of the joint and the hoses are attached. For the water test, the bleed-off petcock must be located at top dead center.

b. Inflate end element sealing tubes with air or water in accordance with equipment and manufacturer's instructions.

c. All test pressures are measured as gauge pressure, defined as any pressure greater than atmospheric pressure. Test observer shall note water produces a pressure of 0.43 psi for every foot of depth, and therefore test pressures must be increased to offset the depth of groundwater over the pipe. If the groundwater level is 2 ft or more above the top of the pipe at the upstream end or if the pressure required for the test is greater than 6-psi gauge, the joint test method shall not be used and the infiltration test may be used (see ASTM C969).

d. An air or water reservoir shall be included in the joint test system. By maintaining a constant supply of air or water in a reservoir, continuous pumping of air or water is not required, and any variances in test equipment and joint space will be negated. The reservoir shall have a minimum volume of 2.5 ft3.

6. The joint air pressure test shall be performed as follows

a. Pressurize the void volume with air to 3.5 psi greater than the pressure exerted by groundwater above the pipe. Allow the air pressure and temperature to stabilize before shutting off the air supply and start of test timing.

b. If pressure holds, or drops less than 1 psi in 5 seconds, the joint is acceptable.

c. If the joint being tested fails, it shall be retested, or repaired if necessary, and retested.

d. After the joint test is completed, exhaust void volume, then exhaust end element tubes prior to removal of apparatus.

7. The joint water pressure test shall be performed as follows

a. Introduce water into void volume until water flows evenly from open petcock. Close the petcock and pressurize with water to 3.5 psi above the pressure exerted by groundwater above the pipe. Shut off the water supply.

b. If pressure holds, or drops less than 1 psi in 5 seconds, the joint is acceptable.

c. If the joint being tested fails, it shall be retested, or repaired if necessary, and retested.

d. After the joint test is completed, exhaust end element tubes which will automatically release the water from the void volume, prior to removal of apparatus.

G. Deflection Test – Flexible Pipe

a. If after the visual or video inspection of the storm trunk or lateral lines, the Inspector finds there is “egging or deflection” of a section of pipe, a deflection test shall be performed on the defective section of pipe installed. Test shall be performed using an odd-legged mandrel pulled through the pipe without mechanical assistance or by laser profiling. The mandrel size shall be the measured inside diameter of the subject pipe minus 5% of the measured diameter. The mandrel shall have no less than nine legs.

b. Any pipe failing any deflection test shall be removed, replaced, and retested.

c. At the end of the two-year warranty period, the flexible storm pipe will be visually inspected for “egging or deflection”. If excess deflection is observed, the Owner/Warranty Holder will, at his/her expense, retest questionable portions per this section.

H. Repair

1. Repair or replace any unacceptable work at no additional cost to the Owner.

2. Repair all visible leaks.

3. Remove any concrete webs or protrusions.

4. Remove form ties and repair tie holes.

3.05 RESPONSIBILITY

A. The Contractor shall be held strictly responsible for all parts of the work that bear the load of the backfill. If structural failures in the underdrain or appurtenances develop within one (1) year from the date of final acceptance of the work, the Contractor shall be required to replace all faulty material at his full expense. To this end, the Contractor is advised to purchase material under a guarantee from the manufacturer, guaranteeing proper service under conditions which are established by the drawings, specifications and local conditions.

[END OF SECTION]

SECTION 02720

SEGMENTAL REPLACEMENT (PIPE AND TAP CONNECTIONS)

PART 1 -- GENERAL

1.01 SCOPE OF WORK

A. The work specified in this Section includes all labor, materials, accessories, equipment, and tools necessary to install and test the segmental replacements (SRs) of pipe and tap connections where shown and dimensioned on the Drawings and as specified herein.

B. SRs shall include the following:

1. Pre-excavation video or pictures of surface features in the immediate area surrounding the SR (particularly sidewalks and driveways)

2. Exposing the section of defective pipe in accordance with Section 02200 – Earthwork

3. Ensuring the SR excavation has sufficient length to install new pipe at a positive slope

4. Dewatering the excavation in accordance with Section 02200 – Earthwork

5. Installing the SR pipe or tap, coupling, and bedding

6. Replacement and reinstatement of all tap connections within the limits of the SR

a. When an SR on a main line pipe is performed, each service lateral that falls within the limits of the main line SR shall only be connected to the main line using a factory-fabricated tee or wye on the main line. Using a Romac-type coupling, Inserta Tee to connect a new main line pipe to a service lateral is not acceptable.

7. Testing the SR pipe as specified

8. Backfilling and restoring surface features in accordance with Section 02200 – Earthwork and the Owner's guidelines

9. CCTV inspection of SR segments from manhole to manhole after installation for acceptance

1.02 RELATED WORK SPECIFIED ELSEWHERE

A. Section 01010 – Summary of Work

B. Section 01300 – Submittals

C. Section 02050 – Building Demolition

D. Section 02200 – Earthwork

E. Section 02731 –Sewer Inspection

F. Section 15006 – Ductile Iron Pipe

1.03 SUBMITTALS

A. The Contractor shall submit Shop Drawings of pipe and couplings and other information in accordance with the requirements set forth in Section 01300 – Submittals.

B. Construction video shall be taken in accordance with the requirements of Section 01010 – Summary of Work.

PART 2 -- PRODUCTS

2.01 GENERAL

A. Main line pipes, tees, wyes, laterals, service connections, and service connection fittings shall be ductile iron or PVC of a minimum SDR 26 or as specified elsewhere in the Contract Documents.

B. Bedding, aggregate, backfill, and surface restoration shall be as specified in Section 02200 – Earthwork.

C. Concrete collars shall be Class B as specified in Section 03300 – Cast-in-Place Concrete.

2.02 PIPE COUPLINGS

A. Couplings for joining existing pipes to proposed emergency point repair (EPR) pipes shall be specifically designed and rated for joining sewer pipes composed of different materials and/or having varying diameters.

B. All couplings shall have Type 304 stainless steel clamps, one on each side.

C. All couplings shall have Type 304 stainless steel shear rings.

D. All couplings shall be as manufactured by Fernco, Mission, or Engineer-approved equal.

PART 3 -- EXECUTION

3.01 INSTALLATION

A. All EPRs shall be performed in accordance with the drawings and the following:

1. Contractor shall mark off extents of SR and limits of excavation.

2. Contractor shall take pre-excavation video of surface features (sidewalks, driveways, etc.) adjacent to the limits of excavation.

3. Contractor shall excavate in accordance with Section 02200 – Earthwork. Under no circumstances will the Contractor be allowed to remove concrete or asphalt without cutting it prior to removal. The saw cutting shall be deep enough to produce an even, straight cut.

4. Contractor shall expose the defective pipe so that undamaged sections of the existing pipe are visible on both sides of the proposed SR and shall confirm the required limits of the SR with the Owner and/or Engineer. At a minimum, a total of eight (8) feet of piping shall be replaced by the Contractor at each SR. Pipe and laterals (if present) shall be removed by cutting the pipe or lateral on each side along lines perpendicular to the longitudinal axis of the pipe so "spigot ends" remain in place to be connected to the replacement pipe. Disposal of pipe and excavated material shall be in accordance with Section 02050 – Building Demolition and Section 02200 – Earthwork.

    a. If the existing line to be repaired has been CIPP-lined and the host pipe is composed of brittle material (clay or concrete), it shall be removed to expose the CIPP liner so the liner can be securely anchored at the repair location.

5. Contractor shall confirm with Owner and/or Engineer that each proposed EPR will have a positive slope. Pipe sags shall be prohibited. Reverse grades shall be prohibited unless approved by the Owner and/or Engineer. If additional excavation and pipe removal is needed to achieve a positive slope, Contractor shall confirm length of additional footage required with Owner and/or Engineer.

6. Contractor shall dewater, sheet, and/or brace all excavations in accordance with Section 02200 – Earthwork. Well points, pumps, sump pits, sheeting, bracing, and/or sock drains shall be used to provide a safe, dry, open trench for all repairs or replacements specified herein. There shall be no sitting water in the trench bottom prior to laying new pipe. Erosion and sedimentation controls shall be provided for all SRs.

7. Contractor shall install pipe bedding and compact in accordance with Section 02200 – Earthwork.

8. New pipe shall be installed using the specified couplings. Gaps between existing pipe and new pipe shall be minimized. Couplings shall be installed in accordance with the manufacturer’s guidelines, including those related to pre-cleaning, installation direction, nut torque, etc.

9. If present, service laterals shall be reconnected at the edge of the trench. Shear rings shall be used on all lateral couplings.

10. Contractor shall confirm positive slope prior to backfilling.

11. Contractor shall flush or clean SR pipe.

12. Contractor shall backfill and compact in accordance with Section 02200 – Earthwork.

13. CCTV inspection after SR is completed shall be performed in accordance with Section 02731 –Sewer Inspection. Owner and/or Engineer shall confirm visible acceptance of EPR.

14. Contractor shall restore any surface features including roadway and driveway pavement, sidewalks, and grass. Surface features shall be restored to at least the same condition as existed before construction began.

- END OF SECTION -

SECTION 02731

TELEVISION INSPECTION

PART 1 GENERAL

1.01 SCOPE

A. The work covered by this Section includes furnishing all labor, competent certified technicians, equipment, tools, accessories, and materials required to perform closed-circuit television (CCTV) inspection of specific sanitary sewer pipes as shown on the Drawings and as specified as follows:

1. The existing sanitary sewer pipes designated for heavy cleaning after they are cleaned

2. All new sanitary sewer pipes and tap connections after they are installed

3. Additional sanitary sewer pipes as directed by the Owner or Engineer

B. Digital videos, data, and photos shall be delivered to the Engineer on external portable hard drive, which shall become property of the Owner. Data files shall be named in accordance with required standards, which will allow video files to be directly linked to pipe assets.

1.02 SUBMITTALS

A. Contractor shall submit a Traffic Control Plan.

B. Contractor shall submit schedules of work on a weekly basis. Provide 24-hour notice for deviations from the schedule that are not caused by weather or natural causes.

C. Contractor shall submit a confined space entry plan.

D. Informational Submittals: Prior to beginning CCTV inspection work, Contractor shall submit the following in accordance with Section 01300 – Submittals:

1. References: Contact names and telephone numbers of CITYs where the Contractor has performed similarly sized and type projects in the last five years

2. List of staff and equipment to be used on Project

3. Crew chief qualifications

4. Confined space entry and hazardous atmosphere training certifications

5. Submit a written description of procedures to be used to the Engineer, including product literature for all digital video equipment including, but not limited to, cabling, camera, monitor, footage counter, digital video tilting device, and recorder.

6. Proposed door hanger for public notification

E. Contractor shall furnish all labor, materials, machinery, equipment, and incidentals required to perform thorough CCTV inspection of the designated sewers.

F. Contractor shall send an email on a daily basis to the Owner and Engineer that lists the manholes that may be accessed during the next 24-hour period. A weekly list of manholes may be submitted in lieu of a daily list, subject to the Engineer's written approval.

G. Contractor shall keep, and submit to the Engineer weekly, daily work logs describing the work location, manhole numbers, work times, labor requirements, personnel names, equipment used (including identification numbers), fire hydrant and other required permits, and work progress. Work logs shall be kept independent of any other required logs.

H. The work described in this Section, including any internal sewer inspections, shall meet the minimum requirements as presented in the OSHA Standard, Title 29 CFR 1910.146, Permit Required Confined Spaces. Contractor shall notify the Owner and Engineer each day by phone or email when it is necessary for Contractor to enter a manhole(s). Contractor shall identify all manholes that he plans on entering that day by street location and manhole number.

I. Contractor shall submit final sewer inspection digital video and data as previously listed herein and as required per Article 3.05 of this Section.

1.03 QUALIFICATIONS

A. Contractor

1. Successfully performed work on at least three other projects within the last five years and at least 500,000 linear feet of CCTV experience

B. CCTV Operator: Successfully performed work on at least three other projects within the last five years and at least 250,000 linear feet of CCTV experience

C. Crew Chief: Minimum of five years' experience on projects similar to this Project and experienced using all proposed equipment for this Project

1.04 NOTIFICATIONS

A. Contractor's Notification of Owner and Engineer:

1. A minimum of five days prior to the anticipated commencement of inspections in any one area and 24 hours in advance of actual start

2. When an obstruction that is restricting flow in the sewer pipelines is discovered

3. If the conditions for CCTV inspection are found to be unsafe or impractical

4. Each week, Contractor shall send an email to the Owner's and Engineer's designated contacts that lists the location(s) of work, the pipe segments and manholes that will be accessed each day.

B. Contractor's Notification of the Public:

1. Between 24 hours and 48 hours prior to the inspection of any line segment, Contractor shall distribute door-to-door a door hanger, approved by the Owner and Engineer, describing the work to be performed to notify every residence and business that may be affected. Door hangers shall be double-sided with the notification information in the English language on one side and in the Spanish language on the reverse side.

PART 2 PRODUCTS

2.01 TELEVISION INSPECTION EQUIPMENT

A. Video inspection shall utilize PACP (Pipeline Assessment and Certification Program) certified software.

B. CCTV inspection equipment shall produce a color recording

C. Contractor shall provide a mobile vehicle with video monitoring equipment specifically compatible with the camera equipment being used. The vehicle shall be large enough to accommodate at least three people at any time for viewing of the monitor. Owner and Engineer shall have unrestricted access to observe the television screen and all other operations at all times.

D. The television camera used for the inspection shall be specifically designed and constructed for such inspection. Adjustable light source to allow an even distribution of lighting for the camera shall be suitable to allow a clear color picture of the entire periphery of the pipe. The camera shall be capable of panning 360 degrees and tilting 270 degrees to facilitate the inspection of all laterals, with optimum picture quality provided by focus and iris adjustment. The camera, television monitor, and other components of the video system shall be capable of producing a minimum 600 line resolution picture. Backup camera shall be available on the Project site. The camera shall be operative in 100 percent humidity conditions and in a hazardous and corrosive environment. The camera shall be capable of zooming at least 10:1 for looking further down the pipe or up into the laterals.

E. The camera, television monitor, and other components of the video system shall be capable of producing picture quality to the satisfaction of Owner and/or Engineer.

F. The television inspection equipment shall have an accurate footage counter that shall display on the monitor the exact distance of the camera from the centerline of the starting manhole.

G. A slope indicator shall be included on the camera and be accurately calibrated per manufacturers specifications for measurement of pipe slope.

H. The camera shall be capable of height adjustment so that the camera lens is always centered at one half the inside diameter, or higher, of the pipe being inspected.

I. Lighting for the camera shall be suitable to allow a clear picture of the entire periphery of the pipe. A reflector, in front of the camera, may be required to enhance lighting in dark or large diameter pipes. The image shall be clear and bright enough to allow the reviewer to discern even small defects in the pipe being inspected Video that does not meet this requirement, or fails to meet PACP specifications, shall be cause for the Contractor to reinspect the pipe.

J. Video data will be PACP compliant and compatible with the Owner's existing software database system.

K. Video data shall be provided to the Owner in a digital format such as MPEG or WMV, as well as on an external device, such as a USB thumb drive or similar format approved by the Owner. CDs or DVDs are not approved.

PART 3 EXECUTION

3.01 PREPARATION

A. Contractor shall, in the presence of Owner's and/or Engineer's inspector, calibrate the camera footage every week with an aboveground tape measure and simultaneous CCTV footage counter.

B. Contractor shall not float the camera unless permitted by the Owner or Engineer.

C. See Article 3.04 herein for conditions under which flow control is required.

3.02 TELEVISION INSPECTION

A. Contractor is required to complete the standard National Association of Sewer Service Companies (NASSCO) industry standard Pipeline Assessment and Certification Program (PACP) forms using the standard NASSCO PACP coding during filming of the CCTV videos.

B. Obstructions that cause a stuck camera shall be the responsibility of the Contractor, and the retrieval of equipment or cameras shall be the responsibility of the Contractor and shall be performed at the Contractor's expense.

C. Adjust the camera height such that the camera lens is always centered in the pipe being televised.

D. Provide a lighting system adequate for good quality pictures. A reflector in front of the camera may be required to enhance lighting in black pipe.

E. Perform CCTV inspections as follows:

1. Before insertion of the camera into the sewer, the camera operator shall record, on the video, the upstream and downstream pipe sizes, inverts, and material, the specific location of the sewer (the standard data field in NASSCO PACP header), the direction in which the camera will travel, and all other mandatory NASSCO fields. The camera shall move through the line, in either direction, at a moderate rate, stopping when necessary to permit proper documentation of the sewer's condition. Maintain copies of video and reports for reference by the Owner for the duration of the contract

2. Collect post-cleaning inspection video at each lateral for an extended period to better understand the flow from each individual lateral. The camera shall be positioned at each lateral for sufficient duration determine the nature of the flow and condition of the lateral (Minimum 30 seconds). Any lateral inspection deemed unacceptable by the Owner shall be re-televised by the Contractor at no additional cost to the Owner.

3. Videos shall pan beginning and ending manholes to verify that all debris has been removed.

4. The Camera operator shall make a thorough video inspection of all clamped joint in the line, sectional liners and points where pipe material transitions from one material to another.

5. A video inspection report shall be prepared by the Contractor, and submitted to the Owner, for each line segment that is CCTV inspected.

6. The accuracy of the measurements for location of defects, service connections, changes in pipe materials, and all other PACP recognized conditions is paramount. Marking on cable, or the like, which would require interpolation for depth of manhole shall not be allowed, Measurement meters shall be accurate to one-tenth if a foot over the entire length of the sewer line section being inspected. Prior to recording the location of defect, service connection, etc., slack in the cable of the television inspection camera shall be taken up to assure metering device is designation proper footage. Accuracy of the measurement meters shall be checked daily by use of a walking meter, roll-a-tape, or other suitable device satisfactory to the Owner.

7. Camera distortions, in adequate lighting, dirty lens, or blurred/hazy picture will be cause for rejection of a video and rejection of the associated line segment, Any pipeline reach television inspection deemed unacceptable by the Owner shall be re-televised by the Contractor at no additional cost to the Owner. Payment for televised inspection shall not be made until the Owner approves the quality of the video and logs.

8. CCTV inspection video shall be continuous for pipe segments between manholes. The Contractor shall not leave gaps in the video of a segment between manholes.

9. The goal of the cleaning is to sufficiently remove debris, roots, and deposits to inspect the pipeline and provide at least 95 percent capacity of the pipeline. Sewers that are not sufficiently cleaned to permit television inspection shall be re-cleaned and re-inspected at no additional cost to the Owner.

3.03 PASSAGE OF TV CAMERA

A. The camera shall not be propelled through the line at a rate greater than 30 feet per minute, stopping when necessary to permit proper documentation of the condition of the sewer line section. Digital video shall be captured at a minimum video bit rate of 4,000 kbps. In no case shall the television camera be pulled at a speed greater than 30 feet per minute unless permitted by the Owner or Engineer.

B. The intention shall be to inspect the full length of sewer between each manhole and not in multiple files, unless specifically approved by Engineer. If during TV inspection of a pipe line, the camera is unable to pass an obstruction, even though flow is not obstructed, televise the remainder of the line from the other direction (reverse setup) in order to obtain a complete video of the line. If a reverse setup is conducted, then two separate video files are allowable; the two separate files shall have the same filename but with a different direction of survey, etc. in the filename or as otherwise directed by the Owner or Engineer, so that it is clear there are multiple files and videos for the same pipe segment.

C. When a line is being videoed from the opposite direction, in order to survey on either side of an obstruction, and a second obstruction is encountered, the Contractor shall notify the Owner immediately.

D. Contractor can televise multiple upstream and/or downstream sewer segments from a single manhole setup location as long as each video of sewer section from one manhole to the immediately adjacent manhole is submitted as a separate file.

E. The television camera shall travel through the lines using its own power. The pictures taken of the entire inside periphery of the pipe shall be clear and visible. Picture quality and definition shall be to the satisfaction of Engineer, and if unsatisfactory, the equipment shall be removed, and no payment shall be made for the unsatisfactory inspection.

F. Stop the camera at all service laterals and pan at such an angle that an internal view of the service lateral is available.

G. All sanitary sewer pipes (lines) 48” in diameter, or less, shall be dewatered for cleaning and inspection purposes. Exceptions to the dewatering requirement will be considered on a case by case basis. The Contractor will assume that dewatering will be required for bidding purposes.

H. Dewatering may be accomplished by pumping water around the work area or by plugging off pipes to isolate the portion of the system being worked on while cleaning and performing inspection. If plugging the line is used for dewatering purposes, the system must be properly monitored so that no overflows occur If a pipe that has been rehabilitated by the installation of a liner is plugged, the liner must be braces at the manhole to prevent movement of the liner.

3.04 SEWER FLOW CONTROL

A. At all times during CCTV inspection, the flow in the sewer line section(s) undergoing inspection shall be suitably controlled in accordance with the drawings. The depth of wastewater flow shall not exceed the following:

24-inch Pipe or Less:	10 percent of pipe diameter
Over 24-inch Pipe:	20 percent of pipe diameter

B. When the depth of flow in the section(s) (including sags) being inspected is above the maximum allowable percentage specified above for the television inspection, the flow shall be reduced to allowable levels by performing the inspection during periods of minimum flow, with bypass pumping, or by pulling the camera with swab or a high velocity jet nozzle, as approved by the Engineer.

C. When flow in a sewer line is plugged, blocked, or bypassed, sufficient precautions must be taken to protect the sewer lines from damage that might result from sewer surcharging. Further, precautions must be taken to ensure that sewer flow control operations do not cause flooding or damage to public or private property being served by the sewers involved.

3.05 SEWER INSPECTION REPORTS

A. Summary reports shall indicate individual survey results in tabular form and shall provide a sortable list of surveys based on a user-defined description field. It shall include starting and ending manhole numbers, depths, pipe material, total survey length, and pipe diameter.

B. Contractor shall submit, in electronic format, digital videos, photos, and evaluation reports to Engineer on an external hard drive or USB stick. DVDs or CDs are not acceptable.

C. If digital videos are of such poor quality that Engineer is unable to evaluate the condition of the sanitary sewer main, locate the sewer service connections, or verify the proper installation, Contractor shall be required to re-televise the sanitary sewer and provide new digital videos of good quality, at no additional cost to Owner or Engineer.

D. All digital videos shall become the property of Owner.

E. Data to be provided weekly to Engineer shall either be recorded on a portable external hard

drive or directly copied to Engineer's portable external hard drive. Each hard drive shall be filled with as much data as practical to minimize the number of hard drives submitted. Sections of a single segment of sewer main shall not be recorded to more than one hard drive. Video footage of recorded segments shall be grouped by area and shall be submitted in sequential order relating to the area mapping designation. The footage counter reading from the camera equipment shall appear on all videos. Contractor shall review each submittal of CCTV inspection data to assure its quality and accuracy and shall revise the CCTV inspection data as needed to correct any inaccuracies prior to providing each submittal to the Engineer. Throughout the duration of the Project, should Engineer discover inaccuracies in any of the videos, Contractor shall re-inspect those segments at no additional cost to the Owner or Engineer. The Engineer will require a 30-day period to perform a quality review of sewer inspection data/videos after each submittal of data/videos has been received from the Contractor. The Contractor is encouraged to submit sewer inspection data/videos in a timely manner as payment will not be processed until the sewer inspection data/videos have successfully passed the quality review and been accepted by the Engineer. This 30-day review period applies to both the initial submittal of data/videos for a segment of sewer main and any subsequent resubmittals of data/videos originally determined to be unacceptable by the Engineer.

F. Contractor shall provide to Engineer CCTV inspection data via external hard drive on a weekly basis and on a monthly basis. The data shall specifically include video indexing for all observations. Prior to beginning the CCTV inspection work, Contractor shall submit a sample deliverable of CCTV inspection data for a single length of sewer pipeline obtained from a past CCTV inspection project performed by the Contractor; Contractor shall not proceed with the CCTV inspection work until this sample deliverable has been submitted to the Engineer for review and the Engineer has subsequently approved its format and contents. Data to be submitted with sample deliverable and weekly/monthly submittals shall include:

1. Database file

2. Videos for each pipe segment in MPEG-1 format or greater

3. An inspection report for each pipe segment as a .pdf file

Files shall be named in accordance with the Owner's and Engineer's requirements. Each video file and inspection report file name shall be composed of Asset ID to Asset ID, starting with upstream Asset (MH20-2005_to_MH20-2010_Pre.pdf or MH20-2005_to_MH20-2010_Post.pdf). All submitted video and inspection report files will follow this naming convention.

G. The camera equipment/software shall be capable of producing digitized images of all sewer mainlines and service connections in .jpg format. Contractor may be instructed to take digital still images of each mainline sewer joint and service connection to clearly depict it. The digital photographs (.jpgs) shall be at least 50 kilobytes in size. The screen capture shall include an onscreen display with date, reach number, and footage. The photographs shall become the property of the Owner.

H. Upon approval by the Engineer of all, or portions of, the data delivered via the portable external hard drives, the approved CCTV data shall be delivered to Engineer on portable external hard drives. Each portable external hard drive shall be labeled to clearly indicate the date of the inspection, the designated segment(s) of sewer main(s) contained on the portable external hard drive, the name of the Project, the Project CIP number, Contractor name, and the index number of the portable external hard drive. The portable external hard drives shall contain separate digital files for each manhole-to-manhole section. The index

number shall indicate the sequential number of the portable external hard drive followed by the mini-basin number.

I. The database shall be comprehensive for the entire Project, and additional data shall be added to the database each week. Each manhole has been given a unique manhole identification (Asset ID) per the Owner's guidelines, and the name of each database file shall be either that unique upstream Asset ID followed by the unique downstream Asset ID or as otherwise directed by the Owner or Engineer.

J. There may be situations that require Contractor to televise an individual pipe segment from more than one direction (i.e. the camera is only able to televise 75 percent of the segment heading downstream, and the remaining 25 percent must be televised heading upstream). The name of additional database files, etc. produced in these circumstances shall be as shown below or as otherwise directed by the Owner or Engineer.

Examples: Initial file name:

Asset Id_ Direction of Survey

MH20-2005_to_MH20-2010_Post _Downstream

Additional file name(s):

MH20-2005_to_MH20-2010_Post _Upstream

K. The name of each digital still image, if required, shall be based on the video/data file name of the sewer reach in which the image was taken. The name shall be either recorded as the video/data file name, followed by the footage at which the mainline sewer joint or service connection was encountered (i.e. (File Name) @(Footage).jpg) or as otherwise directed by the Owner or Engineer.

L. Contractor shall provide a typewritten summary that lists the contents of each portable external hard drive. The inspection logs shall be submitted on portable external hard drive in Adobe .pdf format with the pipe ID included in the filename, such as MH20-2005_to_MH20-2010_Post.pdf, and shall include color still photos (.jpg format) of mainline sewer joints and service connections encountered during the television inspection.

M. At the end of the Project, Contractor shall provide a digital and written summary listing of all videos provided under this Project. Digital version shall be developed and submitted in current version of either Microsoft® Excel or Microsoft® Access software. Acceptance of this portion of the Work shall be dependent upon the results of the television inspection.

[END OF SECTION]

SECTION 02740

CURED-IN-PLACE PIPE

PART 1 GENERAL

1.01 SCOPE

A. It is the intention of this specification to provide for the trenchless restoration of gravity sanitary and storm sewers by the installation of a resin-impregnated, flexible tube which is inverted or inserted into the existing conduit and inflated by use of a hydrostatic head or air pressure. The resin is cured by elevating the temperature and circulating the fluid (water/air) used for the inflation to a proper level per manufacturer's recommendations for the thermosetting reaction. When cured, the finished pipe will be continuous and tight-fitting from manhole to manhole.

B. The work covered by this section of the specifications includes the furnishing of all labor, tools, equipment, and materials, and performing all operations in connection with lining of existing sewers with a continuous cured in place (CIPP) pipe liner. The CIPP liner will be as specified herein. The work shall also include all necessary maintenance of traffic provisions, host pipe preparatory work required in advance of the lining operation, including, cleaning and removal of all debris, removal of protruding service connections, complete maintenance of all wastewater flows, reinstatement of service connections and sealing of liner ends at manholes, and the cleanup of the work site, including restoration of surfaces such as paving, and seeding, sodding and graveling, as needed, if damaged. When completed, the formed liner should extend from end-to-end of the section being lined in a continuous, tight fitting, pipe-within-a-pipe as specified herein.

C. The bidder's attention is directed to the general conditions, section 6.31, SPILL OR DISCHARGE OF WASTEWATER OR RECLAIMED WATER.

1.01 RELATED WORK SPECIFIED ELSEWHERE

A. Section 01300 – Submittals

B. Section 01510 – Temporary Construction Utilities

C. Section 02650 – Sewer Cleaning

D. Section 02731 –Television Inspection

E. Section 02750 – Chemical Grouting

F. Section 02762 – Sewer Service Lateral CIPP Lining

1.02 REFERENCES

A. This specification references ASTM standards and other related standards, which are made a part hereof by reference and shall be the latest edition thereof.

1. ASTM D-543 Standard Test Methods for Resistance of Plastics to Chemical Reagents

2. ASTM D-638 Standard Test Method for Tensile Properties of Plastics

3. ASTM - 695 Standard Test Method for Compressive Properties of Rigid Plastics

4. ASTM D790 Test Method for Flexural Properties of Unreinforced and Reinforced Plastics and Electrical Insulating Materials

5. ASTM D903 Standard Test Method for Peel or Stripping Strength of Adhesive Bonds

6. ASTM D2290 Standard Test Method for Apparent Hoop Tensile Strength of Plastic or Reinforced Plastic Pipe

7. ASTM D2412 Standard Test Method for Determination of External Loading Characteristics of Plastic Pipe by Parallel-Plate Loading

8. ASTM D5813 Standard Specification for Cured-In-Place Thermosetting Resin Sewer Piping Systems

9. ASTM F1216 Standard Practice for Rehabilitation of Existing Pipelines and Conduits by the Inversion and Curing of a Resin-Impregnated Tube

10. ASTM F1743 Standard Practice for Rehabilitation of Existing Pipelines and Conduits by Pulled-In-Place Installation of Cured-In-Place Thermosetting Resin Pipe

11. ASTM F2019 Standard Practice for Rehabilitation of Existing Pipelines and Conduits by the Pulled in Place Installation of Glass Reinforced Plastic (GRP) Cured-in-Place Thermosetting Resin Pipe (CIPP)

12. ASTM F2561 Standard Practice for Rehabilitation of a Sewer Service Lateral and Its Connection to the Main Using a One Piece Main and Lateral Cured-in-Place Liner

1.03 SUBMITTALS

A. After the award of the contract or issuance of work order, and before any materials are delivered to the job site, the Contractor shall submit the following in accordance with the requirements set forth in Section 01300 - Submittals:

1. Performance Work Statement (PWS) summarizing the work to be completed. PWS shall include verification of conformance to these Specifications and a detailed description of the work plan including product delivery, installation schedule, cleaning operations, CCTV inspection, bypass pumping, traffic control, provisions for pipes with sags too large for lining, curing method, repair methods, service reconnections, third party testing laboratory, as-built procedures, warranty, Quality Control Plan (QCP), etc. The QCP shall define the Contractor's, Owner's, Engineer's, and testing labs' role in quality control.

2. Detailed installation procedures; lining production schedule and location; testing procedures and schedule; quality control procedures; liner curing procedures including heat-up and cool-down rates, curing temperature and duration; and shipping and storage requirements, schedule, and procedures

3. A complete list and description of all equipment and materials to be used during the lining operation.

4. Name of resin supplier and liner fabric supplier.

5. Manufacturer’s certification that all materials to be used meet the referenced standards and these specifications.

6. Certification showing that the proposed installer is currently licensed by the Manufacturer to install the products referenced in this Specification.

7. Manufacturer’s approved procedure for material storage and handling, temperature control, liner insertion, curing requirements and trimming and finishing.

8. Contractors procedure for sealing the CIPP liners from groundwater infiltration at manholes/access structures and service laterals

9. Manufacturer’s approved guidelines for minimum and maximum pressures, temperatures, and time durations to be used during liner inversion, cure, and cool down.

10. Data on Contractor's monitoring equipment to be used during curing, type and tolerance of temperature gauges and thermocouples.

11. Procedure for cool down and relieving static head after the CIPP liner is cured.

12. Manufacturer's approved guidelines for factory and/or field (whichever applies) wet out procedures, including volume of resin per unit of liner, roller gap setting, mixing ratios and procedures for resin and catalyst/hardener, shelf life of resin, pot life of resin, and required wet out procedure to insure full saturation

13. Design calculations, prepared by a professional Engineer, for the minimum liner thickness. Calculations shall be submitted at least two weeks prior to mobilization. All designs calculations shall reflect protocol outlined in ASTM F-1216 or ASTM F2019 and ASTM D2412 for “fully deteriorated gravity pipe conditions”. The calculations shall demonstrate the appropriate wall thickness for each pipe segment and that the liner has been properly undersized to avoid the creation of wrinkles or folds. Tabular liner wall thickness calculations shall be provided for each pipe diameter in no less than 1-foot increments from 3 to 6 feet cover depth and in 2-foot increments thereafter. Special liner wall thickness calculations shall be submitted for installations with less than 3 feet of cover. The liner wall thickness shall be increased as required based on actual pipe ovality, as determined by the pre-installation CCTV inspection.

14. A detailed resume of the field superintendent who will direct the work. The field superintendent shall have at least two- (2) year’s field supervisory experience in trenchless pipeline reconstruction. The field superintendent shall be on the job full-time during all steps of the pipe installation.

B. After installation of the liner, the Contractor shall submit the following in accordance with the requirements set forth in Section 01300 – Submittals and in Part 3 herein:

1. Cure Report, including the following documentation:

a. Curing log, including temperatures, pressures, and times during the curing process to document that a proper cure has been achieved. Curing log shall be submitted immediately after the curing is complete for each line segment that is rehabilitated.

2. Pre and Post rehabilitation digital CCTV videos and NASSCO PACP data with proper PACP coding.

1.04 SAFETY

A. The Contractor shall be aware that this contract requires work in active sewers and shall perform the work in compliance with all federal, state, and local requirements for safety in confined spaces, work zone safety, and hazardous materials. The Contractor shall conform to all guidelines set forth by the Occupational Safety and Health Administration (OSHA) and Federal Regulations 29 CFR Ch. XVII, Section 1910.146, Confined Space Entry.

B. The Contractor shall not enter into any sewer segment where hazardous conditions may exist until such time as the source of those conditions are identified and eliminated The Contractor will report any condition to the Owner of Largo which may pose a threat to the health and welfare of employees of the Owner, Contractor, or the general public.

C. The Contractor will use employees that are properly trained and who are aware of possible work, materials, and job-site related hazards.

D. The Contractor shall take satisfactory precautions to protect the sewer segments and appurtenances from damage that might be inflicted upon them by the lining operations. Any damage caused to the sewer segment or other public or private property as a result of the grouting operations shall be repaired at the Contractor’s expense.

E. The Contractor will ensure that waste material is properly disposed in accordance with applicable regulations and safety precautions.

1.05 QUALIFICATIONS

A. The Owner requires a proven and extensive track record for the CIPP liner system to be used under this agreement. All Contractors submitting bids must exhibit satisfactory experience in the installation of the proposed liner system and satisfactory evidence that the proposed liner system has been extensively and successfully installed in the Unites States and the State of Florida.

B. The qualifications of the Contractor shall be submitted with the Bid Proposal. These qualifications shall include detailed descriptions and verification of the following requirements:

1. At a minimum, the Contractor must have three (3) years of CIPP installation experience in the state of Florida

2. Contractor shall have successfully installed at least 300,000 linear feet of CIPP lining in pipelines 12-inch diameter or less and 50,000 linear feet of CIPP lining in pipelines greater than 12-inch diameter, as applicable, using the specified method of installation and curing.

3. The installer must be certified by the liner system manufacturer for installation of the liner system and shall submit a certified statement from the manufacturer that the Contractor

is a certified and/or licensed installer of the CIPP lining

4. An installation reference list of a minimum of three municipal clients that the Contractor has performed this type of work for, including contact names, phone numbers, pipeline diameter, linear footage of pipeline rehabilitated, and a description of the actual work performed.

5. Contractors using subcontractors shall submit information about the sub-contractor (i.e. Name, experience records, jobs on which the general and sub-contractor have worked jointly, etc.).

C. The Owner reserves full and complete authority to approve the satisfactory nature of both the liner system and the installer.

1.06 DELIVERY STORAGE AND HANDLING

A. Care shall be taken in shipping, storage, and handling to avoid damaging the liner. Any liner damaged in shipment shall be replaced at no cost to the Owner and as directed by the Owner and/or Engineer.

B. All materials shall be accompanied by test reports certifying that the material conforms to the specifications listed herein.

C. Materials shall be shipped, stored, and handled in a manner consistent with the written recommendations of the Manufacturer.

D. Any liner showing a split or tear, or which has otherwise received damage, shall be marked as rejected and immediately removed from the site.

E. The liner shall be maintained at a proper temperature in refrigerated facilities to prevent premature curing at all times prior to installation. The liner shall be protected from UV light prior to installation. Any liner showing evidence of premature curing shall be rejected for use and shall be immediately removed from the site.

F. The Contractor shall use all means necessary to protect pipe materials before, during and after installation and to protect the installed work and materials of all other trades.

G. In the event of damage caused to materials, the Contractor shall make all repairs and replacement necessary to the approval of the Engineer at no additional cost to the Owner.

PART 2 MATERIALS

2.01 LINER

A. The liner material shall meet the ASTM D-5813, Standard Specification for Cured-In-Place Thermosetting Resin Sewer Piping Systems

B. Inversion: The sewed tube shall consist of one or more layers of absorbent non-woven felt fabric in accordance with the requirements of ASTM F1216.

C. Pulled-in-Place: The tube shall consist of one or more layers of fiberglass laminate in accordance with the requirements of ASTM F2019 and ASTM F1743.

D. The tube shall consist of one or more layers of a flexible needled felt or an equivalent

nonwoven or woven material, or a combination of nonwoven and woven materials, capable of carrying resin and withstanding the installation pressures and curing temperatures. The tube should be compatible with the resin system to be used on this project. The material should be able to stretch to fit irregular pipe sections and negotiate bends.

E. The tube should be fabricated to a size that, when installed, will tightly fit the internal circumference for the length of the original conduit without any annular spaces between the liner and host pipe and be able to bridge short areas of missing pipe. Allowances should be made for the longitudinal and circumferential stretching that occurs during placement of the tube.

F. The wet-out tube shall be uniform in thickness and when subjected to the installation pressures will meet or exceed the designed finish wall thickness.

G. The outside layer of the tube (before wet-out) shall be coated with an impermeable, flexible membrane that shall contain the resin and facilitate monitoring of resin saturation during the resin impregnation (wet-out) procedure.

H. The tube shall be homogeneous across the entire wall thickness containing no intermediate or encapsulated elastomeric layers. No material shall be included in the tube that may cause delamination in the cured CIPP. No dry or unsaturated layers shall be evident.

I. The wall color of the interior pipe surface of CIPP after installation shall be a light reflective color so that a clear detailed examination with closed circuit television inspection equipment may be made.

J. Seams in the tube shall be stronger than the seamless felt and shall meet the requirements of ASTM D5813.

K. Any plastic film applied to the tube on what will become the interior wall of the finished CIPP shall be compatible with the resin system used, translucent enough that the resin is clearly visible, and shall be firmly bonded to the felt material.

L. The tube shall be marked for distance at regular intervals along its entire length, not to exceed 5 feet. Such markings shall also include the lining manufacturer’s name or identifying symbol.

M. The liner shall be fabricated from materials which, when cured, will be chemically resistant to internal exposure to constituents normally present in sanitary sewer and stormwater.

N. Chemical grout designed for injection shall be: AV-100 chemical grout as manufactured by Avanti International, or approved equal.

O. The CIPP shall have a minimum design life of fifty (50) years. The minimum design life shall be documented by submitting life estimates by national and/or international authorities or specifying agencies.

P. The Contractor shall have performed long term testing for flexural creep of the CIPP material installed by his company. These testing results shall be used to determine the long term, time-dependent flexural modulus to be utilized in the product design. This testing shall include demonstration of performance of the materials (tube and resin) and general workmanship of the installation and curing. A percentage of the instantaneous flexural modulus value (as measured by ASTM D790 testing) shall be used in design calculations for external buckling. The percentage, or the long-term creep retention value, utilized shall be

verified by this testing. Values more than 50 percent shall not be applied unless substantiated by qualified third-party test data. The materials utilized for this Project shall be of a quality equal to or better than the materials used in the long-term test with respect to the initial flexural modulus used in design.

2.02 RESIN SYSTEM

A The resin system shall be a corrosion resistant polyester, vinyl ester, or epoxy and catalyst system that when properly cured meets the minimum requirements given herein or those that are to be utilized in the design of the CIPP for this project.

B. The quantity of resin used for tube impregnation shall be sufficient to fill the volume of air voids in the tube with additional allowances for polymerization shrinkage and the potential loss of resin during installation through cracks and irregularities in the original pipe wall, as applicable. A vacuum impregnation process shall be used in conjunction with a roller system to achieve a uniform distribution of the resin throughout the tube.

2.03 STRUCTURAL REQUIREMENTS

A. The CIPP shall be design in accordance with the requirements of ASTM F1216 or ASTM F2019 or ASTM F1743, Appendix X1, has such an acceptable methodology that may be used where applicable. The long-term flexural modulus to be used in the design shall be verified through testing. The long-term modulus shall not exceed 50% of the short-term value for the resin system unless the tube contains reinforcements. If a reinforced tube is utilized, the long-term flexural modulus shall be the percentage of the short-term modulus as determined by the above referenced testing.

B. The minimum CIPP wall thickness for any mainline sewer pipe shall be 6 millimeters.

C. The layers of the finished CIPP shall be uniformly bonded. It shall not be possible to separate any two layers with a probe or point of a knife blade so that the layers separate cleanly or such that the knife blade moves freely between the layers. If separation of the layers occurs during testing of the field samples, new samples will be cut from the work.

D. Any layers of the tube that are not saturated with resin prior to insertion into the existing pipe shall not be included in the structural CIPP wall thickness computation.

E. Any reoccurrence may be cause for rejection of the work. The finished CIPP shall fit tightly to the host pipeline at all observable points and shall meet or exceed the minimum thickness established by the design process. The materials properties of the finished CIPP shall meet or exceed the following structural standards:

MINIMUM PHYSICAL PROPERTIES				
Property	ASTM Test Method	Polyester System	Filled Polyester System	Vinyl Ester System
Flexural Strength	D790	4,500 psi	4,500 psi	5,000 psi
Flexural Modulus (Initial)	D790	250,000 psi	400,000 psi	300,000 psi

Flexural Modulus (50 yr)	D790	125,000 psi	200,000 psi	150,000 psi
Tensile Strength	D638	3,000 psi	3,000 psi	4,000 psi

PART 3 EXECUTION

3.01 GENERAL

A. Contractor shall clean the pipeline with a high-pressure water jet and hydraulically-powered root cutting equipment to remove all internal debris from the pipeline in accordance with Section 02731 – Television Inspection.

B. Hydraulic cementitious patching material used for flow channel construction shall be installed as directed by the manufacturer.

C. Sectional repairs will not be permitted

3.02 SEWER REPAIRS

A. Any protruding pieces of concrete, dropped joints, or broken pipe shall be subjected to point repairs so that the pipe is left in a clean, smooth condition in all respects ready for lining, unless otherwise jointly determined by the Contractor, Engineer, and the Owner that the defect will not compromise the integrity of the liner.

B. If conditions such as broken pipe and major blockages are found that will prevent proper cleaning, or where additional damage would result if cleaning is attempted or continued, the Contractor shall notify the Engineer immediately. The Contractor shall not line through pipe sagging more than 20 percent without written permission from the Engineer.

3.03 JOINT, CRACK, ANNULAR SPACE, AND LINER END CHEMICAL SEALING

A. Prior to CIPP liner installation, all active leaks of a magnitude that will compromise the integrity of the liner shall be stopped at least one hour prior to installation of the liner using chemical seal grout, at no additional cost to the Owner.

B. Chemical seal grout shall have the following properties:

1. Chemical seal grout shall react quickly to form a permanent watertight seal.

2. Resultant seal shall be flexible and immune to the effects of wet/dry cycles.

3. Chemical seal grout shall be non-biodegradable and immune to the effects of acids, alkalis, and organics in sewage.

4. Component packaging and mixing shall be compatible with field conditions and worker safety.

5. Extraneous sealant left inside pipe shall be readily removable.

6. Chemical seal grout shall be compatible with the CIPP liner resin system utilized.

The chemical sealing materials shall be acrylic resin-type and shall be furnished with activators, initiators, inhibitors, and any other materials recommended by the manufacturer for a complete grout system. Sealing grout shall be furnished in liquid form in manufacturer's standard containers. Sealing grout shall be AV-100 by Avanti International or Engineer-approved equal.

C. The Contractor shall modify his equipment as necessary to seal the leaks. The Contractor's equipment and sealing method shall be approved by the Owner and Engineer prior to use. Extreme caution shall be utilized during leak sealing (pressure) operations to avoid damaging the already-weakened sewer pipe. If any damage occurs, it shall be repaired at the Contractor's expense and to the satisfaction of the Owner and Engineer. Excessive pumping of grout which might plug a service lateral shall be avoided. Any service laterals blocked by the grouting operation shall be immediately cleared by the Contractor at no expense to the Owner.

3.04 FLOW CONTROL

A. Any layers of the tube that are not saturated with resin prior to insertion into the existing pipe shall not be included in the structural CIPP wall thickness computation.

3.05 LINER INSTALLATION

A. The work to be performed under this specification shall be performed Monday through Friday, 7:00 a.m. through 5:00 p.m. The Owner acknowledges that the work to be performed may require performance of work outside of this time frame. All work performed outside of the stipulated time frame must be requested and approved in writing by the Owner a minimum of 72 hours in advance of performing such work. Communication, coordination, and other work-hour-related procedures shall be discussed as part of the preconstruction conference.

B. Preparation

1. It shall be the responsibility of the Owner to make all manhole access points open and accessible for the work, and to provide rights of access to these points. The Contractor shall immediately notify the Engineer of access points that cannot be opened due to obstruction by permanent structures. The Contractor shall be responsible to make all necessary provisions to ensure service conditions and structural conditions of the host pipe are suitable for installation and warranty of the liner. If a street must be closed to traffic because of the orientation of the pipeline, the Contractor shall be responsible for Maintenance of Traffic.

2. The Contractor, when required, shall remove all internal debris out of the pipeline that will interfere with the installation of the CIPP. Cleaning shall conform to the requirements of Section 02731 –Television Inspection.

3. Potable water from the Pinellas County water system shall be used for pipe cleaning and lining operations. The Contractor will obtain a portable potable water meter from the Pinellas County Utility (PCU) department and abide by all requirements set forth by PCU, as well as all applicable state and local regulations, regarding the use of the meter. The Contractor will be responsible for all water use fees, at no cost to the Owner. The Contractor is responsible for any damage resulting from improper use of hydrants. The Contractor will not use or obstruct fire hydrants in the event of a fire in the area. The Contractor shall not waste water from the Pinellas County system because of improper connections or hydrants left open

4. It shall be the responsibility of the Contractor to clear the line of obstructions such as solids and roots that will prevent the insertion of CIPP and a tight fit with the host pipe. If pre-installation inspection reveals an obstruction such as a protruding service connection, dropped joint, or a collapse that will prevent the installation process, and it cannot be removed by conventional sewer cleaning equipment, then the Contractor shall suspend lining operations and notify the Engineer.

5. The pre-installation CCTV inspection of the pipeline shall be performed by experienced personnel trained in locating breaks, obstacles, and service connections, in accordance with the Technical Specification Section titled Sanitary Sewer Line Cleaning and Sanitary Sewer Television Inspection The interior of the pipeline shall be carefully inspected to determine the location of any conditions that may prevent proper installation of the CIPP into the pipelines, and it shall be noted so that these conditions may be corrected. A videotape and suitable log shall be kept for later reference by the Owner.

6. The Contractor, when required, shall provide for the flow of sewage around the section, or sections, of pipe designated for rehabilitation. The bypass shall be made by plugging the line at the existing upstream manhole and pumping the flow into a downstream manhole or adjacent system. The pump and bypass lines shall be of adequate capacity and size to handle the anticipated flow. The Contractor will be required to submit a detail of the bypass plan to the Engineer for prior approval.

7. The Contractor shall verify all existing pipe diameters prior to ordering liner materials.

8. The Contractor shall make every effort to maintain service usage throughout the duration of the project. In the event that a service will be temporarily out of service, the maximum amount of time of no service shall be 16 hours for any property served by the sewer. The Contractor shall be required to notify the Owner and all affected properties whose service laterals will be out of commission and to advise against water usage until the sewer main is back in service. Such notification shall be provided to the Owner at least one week prior to service disconnecting.

9. A public notification program shall be implemented, and shall as a minimum, require the Contractor to be responsible for contacting each home or business connected to the sanitary sewer and informing them of the work to be conducted, and when the sewer will be off-line. The Contractor shall also provide the following:

    a. Written notice to be delivered to each home or business describing the work, schedule, how it affects them, and a local telephone number of the Contractor they can call to discuss the project or any problems that could arise.

    b. Personal contact and attempted written notice the day prior to the beginning of work being conducted on the section relative to the residents affected.

    c. Personal contact with any home or business that cannot be reconnected within the time stated in the written notice.

C. Installation of Full Liner

1. Tube Insertion

    a. The wet-out tube shall be inserted/inverted into the pipeline using as defined within relevant ASTM standards previously stipulated. The tube should be

inserted/inverted through an existing manhole or approved access point and fully extend to the next designated manhole or termination point.

b. The application of hydrostatic head, compressed air, or other means shall fully extend the liner to the next designated manhole or termination point and inflate and firmly adhere the liner to the pipe wall.

c. The liner is to be install in a controlled manner at a rate sufficient to prevent damage to the tube. The installation rate shall not exceed 32 feet per minute. The installation head shall be such that, allowing for minor impact, at no tome shall the hoop tension in the felt exceed 500 psi or the hoop stress in the polyurethane membrane exceed 8,000 psi

D. Curing

1. The Contractor shall provide a suitable heat source and distribution system capable of delivering hot water, air and/or steam throughout the entire length of the liner to quickly and uniformly raise the temperature in the liner above the temperature required to commence the exothermic reaction of the resin, as determined by the catalyst system employed.

2. The heat source shall be fitted with suitable monitors to gauge the temperature of the incoming and outgoing water/steam supply to determine when uniform temperature is achieved throughout the length of the liner. Temperature in the liner during the initial and post cure period shall be as specified by the resin supplier. In addition to the gauges on the incoming and outgoing water/steam supply, there shall be thermo couples placed between the liner and the sewer pipe at the end of the liner being cured to accurately measure the liner temperature. The Contractor shall submit, in writing, for approval, his method of monitoring line curing temperatures.

3. A record every 15 minutes of the temperature reading of the thermocouple shall be kept and submitted for each section lined to the inspector or Engineer.

4. Initial cure shall be deemed to be completed when inspection of the exposed portions of liner appear to be hard and sound and the remote temperature sensor indicates that the temperature is of a magnitude to realize an exotherm. The cure temperature shall be held for the period recommended by the resin manufacturer, during which time the distribution and control of the curing medium shall continue. The curing process for the CIPP shall consider the host pipe material, resin/catalyst system, ambient temperature, moisture level and thermal conductivity of the soil.

E. Cool-Down

1. The hardened liner shall be cooled at rate that is no faster than the resin manufacturer’s recommendations. If no guidance is available, no faster than 10 degrees per hour should be performed. The liner shall reach a temperature below 100 degrees F before relieving the static head or pressure in the lined pipe and returning normal flow back into the system. The cool down may be accomplished by introducing cool water or air into the lined pipe. Super cold air shall not be utilized to increase the cooling rate. Care shall be taken in the release of the static head or pressure so that a vacuum will not develop which could damage the newly installed liner.

3.06 FINISH

A. The finished pipe liner shall be continuous over the entire length of an insertion run and be as free as, commercially practicable, from visual defects such as foreign inclusions, pinholes, and de-lamination. The pipe liner shall be impervious and free of any leakage from the pipe to the surrounding ground or from the ground through the sidewall of the lined pipe.

B. Any defects which will, or could, affect the integrity of strength of the liner shall be repaired at the Contractor's expense, in a manner approved by the Owner.

C. The beginning and end of the new CIPP pipe liner shall have manufacturer approved end restraints installed and be sealed to the rehabilitated host pipe using a product equal to “3M 5600 Polyurethane Grout” and a compatible acrylic additive. At the time of final inspection, there shall be no evidence of groundwater infiltration through the annular space between the liner and the host pipe. All manhole terminations sealed by grout shall also require a smooth, uniformed concrete transition between the manhole wall, bench, and invert.

3.07 SERVICE REINSTATEMENT

A. After the pipe liner has been cured, the Contractor shall internally reconnect the existing service connections. The Contractor shall be responsible to confirm the active laterals prior to reconnection. In the case of non-man entry pipes, reconnection shall be performed from the interior of the pipeline by means of the television camera and a cutting device that re-establishes them to not less than 98 percent diameter. All reinstated services shall be cut neat and smooth and shall be wire brushed and smoothed to prevent collection of solids and potential blockages at service connections.

3.08 LATERAL SEALING

A. Prior to starting work, the Contractor shall determine if leaks at service laterals can be fixed from the pipe interior. If excavation at the service lateral within the right-of-way is required, the Owner reserves the right to delete the sewer span between manholes from the work assignment at its discretion. If the service lateral is leaking upstream of the right-of-way line, the Contractor shall notify the Engineer.

B. Sewer service reconnections shall be sealed with the use of equipment which consists of a closed-circuit television system and a special sealing packer device, along with the necessary chemical sealant containers, pumps, controls, regulators, valves hoses, etc. The special lateral sealing packer with an inversion tube or bladder, 36 inch minimum length, to reach up into the service pipe shall be so constructed that it can straddle four (4) to six (6) inch diameter service connections in eight (8) inch or larger main sewer lines. When properly positioned, and with the end elements inflated, a special inflatable sealing tube shall be extended up the service connection, thereby isolating a portion of the service connection containing one or more pipe joints for sealing. The control unit for the device shall have provisions for accurately controlling the packer functions in addition to monitoring the inflation pressure and the void pressure in the isolated area to sealed.

C. After the packer device has been properly positioned in the main line, with the inflatable tube extended into the service connection, the connection shall be sealed by the injection of the chemical sealant. The chemical sealant shall be injected through the special packer device into the annular space between the inflatable tube and the service connection. The injection of the chemical sealant shall continue until the chemical fluid back pressure is enough to insure the complete sealing of all the defects along the length of the inflatable tube.

D. After the service connection has been successfully sealed, the following procedures shall

be performed to ensure that the sealing operation did not block the service connection.

1. The inflatable tube shall be removed from the connection.

2. The packer and elements shall be deflated.

3. The special packer shall be moved forward, and the 360^0 CCTV camera shall be positioned in the center of the service connection and rotated to look up the service connection to insure that the chemical sealant did not cause blockage.

E. If blockage is observed, the chemical sealant shall be removed to ensure the service connection is free flowing.

F. The chemical sealant used shall be in accordance with the requirements set forth in the specifications, or as approved by the Engineer.

G. At the time of final inspection, there shall be no evidence of groundwater infiltration entering the lined pipe from between the liner and the host pipe at the service laterals.

H. Lateral Seal Test

1. At the direction of the Engineer, the Contractor shall pressure test the lateral connection seal.

2. The Contractor shall position a bladder packer over the lateral opening and inflate the inversion tube to isolate the lateral. The bladder shall be pressurized to four (4) PSI plus 0.5 PSI for each foot of groundwater above the sewer invert. Maximum pressure shall be nine (9) PSI.

3. Once the required pressure has been achieved, the air supply shall be disconnected, and the time required for the void pressure to drop 0.5 PSI shall be recorded. If the pressure drops more than 0.5 PSI in less than ten (10) seconds, the lateral shall be regrouted and retested.

3.09 FIELD QUALITY CONTROL

A. For all runs of CIPP liner and where the thickness of the liner changes, the Contractor shall take samples and shall test them in accordance with Article 3.07 herein.

B. Where the pipe diameter is less than or equal to 15 inches, the samples shall be restrained-type samples made by extending the liner through a form with a diameter as close as possible to the existing pipeline. The formed sample shall be provided with insulation to contain cure heat as well as a heat sink, such as sandbags, for cool down. The length of the tube shall be large enough to provide at least five samples.

C. Where the pipe diameter is greater than 15 inches, a plate sample shall be prepared. The test sample shall be fabricated from the material taken from the liner and cured in a clamped mold with the resin used in the liner construction placed in the down tube.

D. Test specimens shall be clearly marked in indelible ink to identify the name of the Project, location, appropriate lateral or main section, work order number, date of installation, and orientation to the top of the pipe (direction of up) so the results can be correlated to the work performed. All test results shall use this designated labeling as a reference.

E. The extraction and labeling of test specimens shall be performed by the Contractor in the presence of the Owner and/or Engineer. The Owner and/or Engineer and Contractor shall, upon completion of sample extraction and labeling, all sign a chain-of-custody form that shall subsequently accompany the sample at all times and shall ultimately be received and signed at the testing laboratory. Test reports shall include a copy of the chain-of-custody form with all signatures to ensure that reported test results are for the correct sample.

F. Each sample shall be large enough to provide at least five total specimens for testing. One test for thickness, flexural strength, and flexural modulus shall be conducted in accordance with ASTM F1216 or ASTM F2019, ASTM D790, and ASTM D2290 for each run of lines. The material shall meet the initial strength requirements of Table 1 of ASTM F1216 or ASTM F2019 (UV cured).

3.10 WET-OUT AND CURE REPORT

A. The Contractor shall submit wet-out and cure reports documenting the specific details of the liner's vacuum impregnation and saturation with resin and the CIPP installation of the liner. A report shall be generated for each liner installation. Copies of all wet-out and cure records shall be submitted to the Owner and Engineer on a weekly basis and prior to submitting an Application for Payment on which payment for the specific liner(s) included in the wet-out and cure records is requested. If the wet-out and cure reports are not submitted prior to the associated Application for Payment, payment for the work will not be made and the Application for Payment will be rejected. At a minimum, the report shall include:

1. Contractor name
2. Owner’s Contract number
3. Line identification and location
4. Date and time of wet-out
5. Identification of sample(s) and name of technician(s)
6. Date of installation in sewer
7. Inside diameter of host sewer pipe
8. Liner thickness
9. Liner length
10. Liner and resin batch numbers
11. Resin type
12. Wet-out length
13. Roller spacing
14. Vacuum setting
15. Quantity of resin and catalyst utilized

16. Name of wet-out technician(s)

17. Time wet-out started and completed

18. Applicable remarks

19. Heat Cure: Boiler and liner heating fluid (water or steam) pressure and temperature versus time log during cure period

20. Cool down report

3.11 TESTING REQUIREMENTS

A. Testing on physical samples from a random 20 percent of cured lines shall be performed, unless a pattern of failure occurs, at which point the Owner or Engineer can request additional testing at no cost to the Owner. All of the costs for sample collection and testing shall be included in the amount bid for the applicable Bid Item for CIPP lining, and no separate payment shall be made.

B. For each inversion length, one CIPP sample shall be cut from a section of cured CIPP that has been inverted through a like-diameter pipe at an intermediate manhole or at the termination point. This sample pipe shall have been held in place by a suitable heat sink such as sandbags. Other sampling techniques may be required for special situations.

C. The Contractor shall submit a method to the Owner and Engineer for review and approval for obtaining representative samples from the installed liners in accordance with Article 3.06 herein. These samples shall be tested by a third-party ASTM-certified testing laboratory at the Contractor's expense to verify compliance with the installed material specifications. The Contractor shall produce these test samples when directed by the Owner and/or Engineer.

D. The CIPP shall meet the chemical resistance requirements of ASTM F1216 or ASTM F2019. CIPP samples for testing shall be of a tube and resin system similar to that proposed for actual construction. CIPP samples, both with and without plastic coating, shall meet these chemical testing requirements. The CIPP samples shall be prepared and the samples' physical properties tested in accordance with ASTM F1216, ASTM F2019, or Section 8 of ASTM F1743 using either proposed method. Wall thickness of samples shall be in accordance with paragraph 8.1.6 of ASTM F1743.

E. The installed CIPP liner shall be leakage tested in accordance with ASTM F1216. The leakage testing shall be conformed before the service connections are re-instated. The Contractor may perform air testing in lieu of water leakage test. The Contractor shall perform a 4 psi air test on the segment after curing the CIPP and prior to internally re-instating laterals on 18-inch and smaller diameter sewers. The CIPP shall be able to hold a 4 psi pressure for a 5-minute minimum duration after a 2-minute stabilization period. Any lining not able to meet the water leakage test or air test shall be repaired and retested at no additional cost to the Owner.

F. When post-installation thickness measurements and/or physical property testing is performed, installed liners which do not pass these material tests will be accepted at reduced payment or rejected as follows:

1. Full Payment: If the thickness, flexural strength, and flexural modulus of elasticity of installed liner are all equal or greater than 95 percent of specified values, full payment will be made.

2. Reduced Payment: If the thickness, flexural strength, or flexural modulus of elasticity of installed liner is between 90 and 94.9 percent of specified value, payment will be made based on an adjusted amount, which shall equal the appropriate unit price bid multiplied by a Value Factor calculated as follows:

   Value Factor = Thickness x Flexural Strength x Flexural Modulus of Elasticity (all percentages expressed as decimals)

3. Rejected: If the thickness, flexural strength, or flexural modulus of elasticity of installed liner is 89.9 percent or less of specified value, product may be rejected.

3.12 FINAL ACCEPTANCE

A. The finished liner shall be continuous over the entire length of the installation. The liner shall be free from visual defects, damage, deflection, holes, delaminations, uncured resin, etc. No pinholes, splits, cracks, thin spots, dry spots, lifts, ridges, or other defects in the CIPP liner shall be permitted. There shall be no visible infiltration through the liner or from behind the liner at manholes and service connections. Wrinkles in the finished liner that cause backwater, reduce the pipe's hydraulic capacity or structural stability, or create voids between the liner and pipe wall are unacceptable. Wrinkles shall neither exceed 10 percent of the diameter of the host pipe nor impede flow at any time, as determined by the Owner's Representative.

B. Cut ins and attachments at service connections shall be neat and smooth. All service connections shall be open, clear, and watertight. The liner opening shall neatly conform to the opening in the host pipe and shall be free of burrs or debris.

C. The Contractor shall prepare a sample for each installation of CIPP. The samples shall be restrained samples for diameters of CIPP less than 18"; and flat plate samples for diameters of CIPP 18" and larger. The flat plate samples shall be taken directly from the wet-out tube, clamped between flat plates, and cured in the downtube. The restrained samples shall be tested for thickness and initial physical properties; flat plate samples shall be tested for initial physical properties only.

D. After installation of the pipe liner and reinstatement of service connections, the Contractor shall perform a TV inspection in the presence of the Owner's Representative. A radial view TV camera shall be used. The finished pipe liner shall be continuous over the entire length of each installation. The pipe liner shall be free of significant visual defects, damage, deflection, holes, and the like, other than in areas of reduced host pipe cross section, wherein a minor longitudinal fold may have formed. Any deformities in the liner, not caused by irregularities in the host pipe that significantly restrict the sanitary sewer flow as determined by the Engineer, shall be repaired by the Contractor at no cost to the Owner. Reinstated service connections shall be neat, smooth, and properly grouted to prevent infiltration of groundwater.

E. Defective lining shall be removed and the pipe re-lined at no additional cost to the Owner. If the host pipe is damaged during the removal process, Contractor shall perform a point repair at Contractor's expense. Prior to removing or repairing any defective lining, the Contractor shall supply a complete CCTV inspection of the CIPP segment to the Engineer.

F. Preliminary field acceptance of the liner shall be based on the Owner's and/or Engineer's evaluation of the installation and curing data, results of air testing where required, and review of the digital CCTV recordings.

   1. Groundwater infiltration shall not be observed through the liner.

2. There shall be no evidence of splits, cracks, breaks, lifts, kinks, delaminations, or crazing in the liner.

3. If any defective liner is discovered after it has been installed, it shall be removed and replaced with either a sound liner or a new pipe at no additional cost to the Owner.

G. Final acceptance of the liner shall be based on the preliminary field acceptance of the liner by the Owner and/or Engineer as previously listed and on the results of the certified laboratory tests on the liner specimens as previously listed.

H. Liners meeting or exceeding the certified thicknesses and specified strengths, as evidenced by the certified laboratory testing results, shall be paid for as specified above.

3.13 CLEAN-UP

A. After the pipe liner installation has been completed and inspected, the Contractor shall clean up the project area. All excess material and debris not incorporated in the permanent installation shall be disposed of by the Contractor. The Contractor, in accordance with State and Federal laws and regulations shall dispose of all excess material and debris not incorporated in the permanent installation. The project area affected by the Contractor's operations shall be restored to original condition, or better.

3.14 WARRANTY

A. The manufacturer shall warrant the pipe liner to be free from defects in raw materials for one (1) year from the date of delivery. The Contractor shall warrant the pipe liner installation for a period of two (2) years from the date of acceptance described above. During the Contractor warranty period, any defect, which materially affects the integrity or strength of the pipe liner, shall be repaired at the Contractor's expense in a manner mutually agreed to by the Owner and the Contractor.

B. If a liner fails to reform, the Contractor shall be required to remove the failed liner at no additional cost to the Owner. This shall include, but not be limited to, all material, excavation, backfilling, cutting concrete, pipe, shoring, temporary pavement, permanent pavement, permits, and other incidental work required to remove the liner from the host pipe. If removal is not feasible, or if removal will cause more harm than acceptable to the host pipe, alternatives may be proposed by the Contractor to the Engineer for review and approval. The integrity of the existing pipe, where the liner was removed, shall be rehabilitated by installing another new pipe section. There shall be no direct payment for this work

[END OF SECTION]

SECTION 02750

CHEMICAL GROUTING

PART 1 GENERAL

1.01 SCOPE

A. It is the intent of this Specification to provide for the rehabilitation of defective pipe joints, some circumferential pipe cracks and other small pipe defects by the application of chemical grouting materials in accordance with ASTM F-2304-03 Standard Practice for Rehabilitation of Sewers Using Chemical Grouting.

B. The work covered by this section of the specifications includes the furnishing of all labor, tools, equipment and materials, and performing all operations in connection with sealing sewer pipe joints, cracks, holes and similar defects, including, but not limited to, cleaning and CCTV inspection of the pipe, pressure testing sewer pipe joints, and sealing pipe joints with chemical grout. The work shall also include all necessary maintenance of traffic provisions, host pipe preparatory work required in advance of the lining operation, including, removal of all debris, removal of protruding service connections, complete maintenance of all wastewater flows, and the cleanup of the work site, including restoration of surfaces such as paving, and seeding, sodding and graveling, as needed, if damaged.

1.02 REFERENCE SPECIFICATIONS, CODES, AND STANDARDS

A. Without limiting the generality of the other requirements of the Specifications, all work herein shall conform to the applicable requirements of the following documents. All referenced specifications, codes, and standards refer to the most current issue available at the time of Bid.

1. ASTM F2304 Standard Practice for Sealing of Sewers Using Chemical Grouting

2. ASTM F2414 Standard Practice for Sealing Sewer Manholes Using Chemical Grouting

3. ASTM F2454 Standard Practice for Sealing Lateral Connections and lines from the mainline Sewer Systems by the Lateral Packer Method, Using Chemical Grouting

4. NASSCO Specification Guidelines – Specification for Sewer Line Cleaning

5. NASSCO Specification Guidelines – Specification for Television Inspection Main Sewer

6. NASSCO/ICGA Suggested Standard Specification for Pressure Testing and Grouting of Sewer Pipe Joints, Laterals and Lateral Connections Using the Packer Method with Solution Grouts

1.03 SUBMITTALS

A. After the award of the contract or issuance of work order, and before any materials are delivered to the job site, the Contractor shall submit to the Engineer the following:

1. A complete list and description of all equipment and materials to be used during the grouting operation.

2. Pump calibration information, field sealing records, certification of pressure

sensing/monitoring equipment, and a list of chemicals to be used together with information on toxicity and hazardous nature of chemicals.

3. Manufacturer's certification that all materials to be used meet the referenced standards and these specifications.

4. Information on recommended or required safe storage and handling of each chemical and evidence that chemicals are approved by OSHA and U.S. Environmental Protection Agency.

5. Manufacturer's approved procedure for material storage and handling, temperature control, liner insertion, curing requirements and trimming and finishing.

6. Contractors procedure for sealing the CIPP liners from groundwater infiltration at manholes/access structures and service laterals

7. Detailed plans for maintenance of wastewater flows including pumps, plugs, pipe size, tank trucks, material, locations, calculations, noise control methods, etc., to the Engineer for approval.

1.03 QUALIFICATIONS

A. The Owner requires a proven and extensive track record for the chemical grouting system to be used under this agreement. All Contractors submitting bids must exhibit extensive satisfactory experience with the equipment and materials used, and satisfactory evidence that the proposed grouting system has been extensively and successfully used in the Unites States and the State of Florida. The installer must be certified by the grouting system manufacturer for use of the system. Contractors using subcontractors shall submit information about the subcontractor (i.e. Name, experience records, jobs on which the general and subcontractor have worked jointly, etc.). The Owner reserves full and complete authority to approve the satisfactory nature of both the grouting system and the installer.

B. The qualifications of the Contractor shall be submitted with the Bid Proposal. These qualifications shall include detailed descriptions of the following:

1. Name, business address, and telephone number of the Contractor

2. Name(s) of all supervisory personnel that will be directly involved in the Project

3. Proposed product information showing compliance with the specified requirements listed herein, including chemical grouts, additives, and packers

4. Documentation of certification of Contractor by the chemical grout manufacturer and/or its authorized representative

5. A reference list of previous projects on which the Contractor has provided chemical grouting over the last five years, including project name, project number, customer name, and Owner's contact information (name and phone number

6. To be acceptable, the Contractor must have had a minimum of five (5) years of active experience in chemical grouting.

7. The chemical grout shall have documented service of successful performance in similar usage, with a minimum of 10,000 joints, laterals, and manholes grouted in the United

States.

8. The Contractor shall sign and date the information provided and certify that, to the extent of his knowledge, the information is true and accurate and that the supervisory personnel will be directly involved with and used on the Project. Substitutions of personnel and/or methods will not be allowed without written authorization by the Owner and/or Engineer.

1.04 SAFETY

A. The Contractor shall be aware that this contract requires work in active sewers and shall perform the work in compliance with all federal, state, and local requirements for safety in confined spaces, work zone safety, and hazardous materials. The Contractor shall conform to all guidelines set forth by the Occupational Safety and Health Administration (OSHA) and Federal Regulations 29 CFR Ch. XVII, Section 1910.146, Confined Space Entry.

B. The Contractor shall not enter into any sewer segment where hazardous conditions may exist until such time as the source of those conditions are identified and eliminated The Contractor will report any condition to the Owner which may pose a threat to the health and welfare of employees of the Owner, Contractor, or the general public.

C. The Contractor will use employees that are properly trained and who are aware of possible work, materials, and job-site related hazards.

D. Mixing and handling of chemical grout may be toxic by passing through unbroken skin, by inhalation of dust or droplets of the materials or by swallowing. Therefore, mixing, handling, and pumping of the chemicals shall be done by personnel thoroughly familiar with the handling of the chemicals involved. All chemicals shall be subject to the approval of the Engineer.

E. The Contractor shall take satisfactory precautions to protect the sewer segments and appurtenances from damage that might be inflicted upon them by the use of grouting equipment. Any damage caused to the sewer segment or other public or private property as a result of the grouting operations shall be repaired at the Contractors expense

F. The Contractor will ensure that waste material is properly disposed in accordance with applicable regulations and safety precautions.

PART 2 PRODUCTS

2.01 CHEMICAL GROUT

A. The Contractor shall provide a chemical sealant solution containing principal chemical sealant constituent, initiator (trigger) and catalyst specifically recommended for the purpose of sealing leaks in sanitary sewer lines and manholes. Chemical sealant constituent, initiator (trigger) and catalyst shall be compatible when mixed. Solution shall have ability to tolerate dilution and react in moving water. After final reaction, it shall be a stiff, impermeable, yet flexible gel. The grout proportions shall be such that dilute aqueous solutions, when properly catalyzed, will form stiff gels. Grout shall make true solution at concentrations as high as three pounds per gallon of water. Solutions shall have ability to accept dilution by groundwater of at least 50% by volume, without significantly changing sealing ability of the gel when at rest or in motion. Solutions shall gel in a predetermined time when exposed to normal groundwater pH ranges and be capable of formula adjustments to compensate for changing conditions. Final reaction shall produce a continuous, irreversible, impermeable stiff gel at chemical concentrations as low as 0.4 lbs per gallon of water. Gel shall not be

rigid or brittle. Gel shall have negligible corrosion rate on mild steel plates.

B. For main lines and laterals, chemical grout shall be a minimum of 10 percent acrylamide base material by weight.

C. Chemical grout shall have the ability to tolerate dilution and react in moving water.

D. Chemical grout shall have the ability to increase viscosity, density, and strength with the use of approved additives.

E. Chemical grout shall have an initial viscosity of approximately 2 centipoise.

F. Chemical grout shall have a controllable reaction time of 10 seconds to 60 minutes

2.02 ADDITIVES

A. The following additives, in quantities as recommended by the manufacturer and as approved by the Engineer, shall be used for all grouting applications:

1. Strengthening Agents: For joint grouting, a latex or diatomaceous earth additive shall be added to increase compressive and tensile strength. The strengthening agent shall be Avanti AV-257 Icoset or Engineer-approved equal.

2. Root Inhibitor: A root deterrent chemical shall be added to control root re-growth. The root inhibitor shall be Avanti AC-50W or Engineer-approved equal.

B. If required by field conditions, the following additives, in quantities as recommended by the manufacturer, may be used at the Contractor's discretion:

1. Dye: A manufacturer-approved water soluble dye without trace metals may be added to the grout tank(s) for visual confirmation.

2. Gel Time Modifier: A gel time extending agent may be used to extend gel time as necessary.

3. Freeze/Thaw: In those lines where the grouting material may be exposed to a freeze-thaw cycle, ethylene glycol or an alternative Engineer-approved additive shall be used to prevent chemical grout cracking once set.

C. When using non-soluble additives, the grout tanks shall have mechanical mixing devices to keep the additives in suspension and maintain a uniform solution of grout and additive.

2.03 ROOT INHIBITOR

A. Root inhibitor shall be dichlorobenil (2-6-dichlorobenzonitrile)

B. The Contractor shall add root inhibitor to the chemical grout mixture at a safe level of concentration having the ability to remain active within the grout for a minimum of 12 months.

2.04 EQUIPMENT

A. The Contractor shall provide equipment consisting of closed-circuit television systems, necessary chemical sealant containers/tanks, pumps, regulators, valves, hoses, etc. and joint sealing packers for appropriate sizes of pipe designated to receive chemical grouting.

The packer shall be cylindrical and have a diameter less than the pipe size. The packer shall be constructed in a manner to allow restricted amounts of sewage to flow and shall be pneumatically operated. Hydraulically or mechanically expanded devices shall not be permitted.

B. To test the accuracy, integrity, and performance capabilities of sealing equipment units, The Contractor shall perform a demonstration test in a test cylinder constructed so that a minimum of two known leak sizes can be simulated. The Contractor shall provide test cylinders and pressure gauges. Contractor shall perform the demonstration test for each chemical sealing unit prior to beginning work. This technique will establish test equipment performance capability in relationship to test criteria and ensure that there is no leakage of the test medium from the system or other equipment defects that could affect joint testing results. Tests may be required at any other time during joint testing work if the Engineer suspects testing equipment is not functioning properly. All testing costs shall be borne by the Contractor.

PART 3 EXECUTION

3.01 CLEANING AND INSPECTION

A. Prior to the application of chemical grouting materials, the Contractor shall thoroughly clean and inspect the sewer designated to receive the chemical grouting. Cleaning shall constitute removal of all debris, solids, roots, and other deposits in the sewer line; particularly at the sewer pipe joints. Sewer cleaning and inspection requirements are in accordance with Section 02650 – Sewer Cleaning.

3.02 SEWAGE FLOW CONTROL

A. The Contractor shall provide for maintenance of flow in the affected portions of the sewer system during grouting of the sewer line. Requirements for sewage flow control and bypass pumping are contained in the Technical Specification titled Sanitary Sewer Line Cleaning and Closed-Circuit Television Inspection.

B. Sewage flow control shall be employed by the Contractor when sewer line depth of flow at the upstream manhole of the sewer line section being worked is above the maximum allowable for joint testing and sealing. Flow control shall be accomplished by bypass pumping of flow from upstream of the sewer segment to be grouted to a point downstream of the sewer segment to be grouted. Depth of flow shall not exceed that shown below for respective pipe sizes as measured in the upstream and downstream manholes when performing joint testing and sealing.

Maximum Depth of Flow for Joint Testing/Sealing

24 in. Dia. Pipe or less	10% of Pipe Dia.
>24 in. Dia. Pipe	20% of Pipe Dia.

C. When required, the Contractor shall provide for the transfer of flow around a section or sections of pipe to be grouted. The proposed bypassing system shall be approved in advance by the Owner and Engineer. The approval of the bypassing system shall in no way relieve the Contractor of his responsibility and/or public liability.

1. If the grouting can be completed in a few hours, bypass pumping may not be required. The placement carriage shall be equipped with a bypass section to allow flow once

grouting is completed.

3.03 PRESSURE TESTING JOINTS IN SEWER LINES

A. Preconstruction Testing

1. The Contractor shall provide equipment such as pumps, gauges, regulators, and hoses, necessary to perform air tests of each joint in those sewer line sections designated for grouting work. Equipment configuration shall be such that there are no valves on or along the air line between the measuring point at the joint and the pressure transducer or sensing device located in the control unit on the surface. Systems which incorporate bladders, hoses, or the like for monitoring the pressures and which have questionable accuracy shall not be allowed. The amount of pressure being exerted on the joint shall be readable above ground on a pressure gauge.

2. The accuracy and calibration of pressure sensing/monitoring system shall have been certified by an independent testing firm within a one-month period preceding the use of equipment. Proof of certification shall be submitted to the Engineer.

3. To confirm that joint testing is not a more severe test than the pipe itself can pass, the Contractor shall perform an on-job barrel test between joints in each pipe line to be tested to determine that the pipe barrel can pass the test criteria. If the pipe barrel will not pass decay rate limits, adjustment of maximum pressure levels will be evaluated jointly between the Contractor and Engineer. Engineer shall render final written decision on each such situation.

B. Sewer Pipe Joint Testing

1. The Contractor shall test each joint by isolating the area to be tested within the testing device and applying positive pressure into the joint and void area created by the test device. The Contractor shall then introduce pressurized air into the isolated void created by testing device. Pressure shall be applied until it is determined that the pressure cannot be built in the void or until the test pressure of 5 psi is reached as recorded by the void pressure monitor. When either of these conditions is reached, the Contractor shall shut off the air supply.

2. If the required pressure cannot be developed, joint shall have failed the test. If the required test pressure in the void was increased to 5 psi, rate of decay of this pressure shall not exceed 1 psi in 30 sec. The joint being tested will also have failed if the pressure drops more than 1 psi in 30 sec. Failure of the joint indicates the need for sealing. Sealing shall be accomplished by the Contractor as specified elsewhere in these Technical Specifications

C. Test Records

1. During grout testing, records shall be kept which include identification of the sewer line section tested, test pressure used, location (footage) of each grouted defect tested and location of grouted defects not tested due to close proximity to building service connections and sanitary sewer manholes, a statement indicating test results (passed or failed) for each grouted defect tested, test pressure achieved and maintained for each grouted defect passing air test, weekly equipment pressure test results, sewer line section barrel test results, daily gel check results, and air temperature at time of testing joints

3.04 CHEMICAL GROUT APPLICATION

A. The entire chemical grouting process shall be performed in strict accordance with the manufacturer's current guidelines. If any deviations from the guidelines are proposed, Contractor shall submit explanation and approval from grout and/or packer manufacturer(s).

B. Repairs shall take place at joints, generally small circumferential cracks, small holes, or similar points of infiltration as identified. The repair shall be such that the original cross-sectional area and shape of the interior of sewer pipe shall not be permanently reduced or changed.

C. Sewer Pipe Joints or Defects

1. Placement of Chemical Grout

a. The Contractor shall position the sealing packer over the area of infiltration by means of a metering device at the surface and closed-circuit television camera in the line.

b. Accurate measurement of the location of the defect to be sealed shall be made, using the portion of sealing packer as "Datum" or measurement point or target.

c. A similar measurement to the target shall also be used to obtain necessary measurement for positioning the injection area of sealing packer over area to be sealed.

d. The Contractor shall expand the sealing packer sleeves using controlled pressures.

e. Expanded sleeves shall seal against the inside periphery of pipe to form a void area at the point of infiltration, completely isolated from the remainder of pipe the line.

f. The Contractor shall pump sealant materials into this isolated area through hose systems at controlled pressures which are in excess of groundwater pressures. Under pressure, the grout shall then be forced out into the soil through any leaking joints and pipe defects. No more than 20 gallons of grout shall be pumped into a single sewer section. If a sewer section requires more than 20 gallons of grout to achieve an effective seal, the Engineer shall be notified and shall approve the use of the additional grout before pumping is continued.

g. Upon completion of injection, the Contractor shall retest the point of repair. If retesting shows the seal was not completely effective, the Contractor shall repeat the sealing process until the defect successfully passes the pressure test. After sealing the entire sewer line section, the Contractor shall remove surplus grouting material from the line section at the immediate downstream manhole. If surplus grouting materials left in the sewer line section by the Contractor results in sewer surcharging and subsequent damage to public or private property, the Contractor shall be responsible for damage to property and expenses incurred by the Owner.

2. Gel Checks

a. The Contractor shall make gel checks daily for each sealing vehicle to monitor both induction period and gel characteristics. The Contractor shall also make checks for every mixed batch or at least twice per day if only one batch is used. The Engineer reserves the right to request adjustment of gel times or reject the entire batch if

acceptable gel characteristics do not exist. Periodic gel checks shall also be made in the pipe (at request of the Engineer) by seating the sealing packer on the pipe barrel and filling the packer void with grout solutions. Pressure will then be monitored until a rise in pressure is observed, indicating that grout has gelled in the packer void. The Contractor shall certify, for each of the sealing vehicles, results of required gel checks.

D. Lateral Connections

1. All lateral connections that are not designated on the Drawings or directed by the Owner and/or Engineer to be replaced via excavation or rehabilitated with a full-circle lateral liner shall be chemically grouted after the CIPP liner is installed and lateral opening has been reinstated in accordance with Section 02740 – Cured-in-Place Pipe. The grout shall extend a minimum of 6 inches up the lateral pipe. If a minimum of 6 inches of grout in the lateral cannot be achieved due to blockages, the Contractor shall proceed to the next connection and shall immediately inform the Engineer of the location and cause of the blocked connection.

2. The lateral packer shall remain in position during the sealing of the connection so the isolated void is maintained. Grout shall be pressure-injected through the lateral packer into the annular space between the inversion tube and the lateral pipe. Under pressure, the grout shall then be forced out into the soil through any leaking joints and pipe defects. No more than 20 gallons of grout shall be pumped through a single lateral connection. If a connection requires more than 20 gallons of grout to achieve an effective seal, the Engineer shall be notified and shall approve the use of the additional grout before pumping is continued.

3. Upon completion of the lateral sealing procedure, the lateral shall be air-tested to confirm the sealing of the connection. If the lateral fails the air test, the grouting procedure shall be repeated at no additional cost to the Owner. This sequence of grouting and subsequent air testing shall be repeated until either the lateral is sealed or it is determined that the grout consumption is too high and may result in the blockage of the lateral pipe. The final determination to stop subsequent attempts to seal a lateral will be jointly made by the Engineer and the Contractor.

4. The Contractor shall confirm lateral flow after the successful sealing of each lateral tap. With the lateral packer in position, the inversion tube shall be retracted and air shall be pressure-injected into the lateral. If a pressure builds in the lateral and does not drop to approximately zero in a few seconds, the packer shall be moved off the connection and the connection shall be viewed with a television camera. With the camera viewing the connection point, an attempt shall be made to obtain a water flush by the property Owner served by the lateral. If water is not visible during this flushing procedure, it shall be assumed that the building sewer connection is blocked with grout and the Contractor shall clear the lateral at no additional cost to the Owner. Contractor shall not be responsible for clearing blockages in the lateral that are not due to grouting operations.

E. Curtain Grouting (Manholes):

1. The entire manhole shall be sealed with grout, including the corbel, wall, pipe seals, bench, and invert using the manufacturer’s recommended material(s) and method(s).

2. Drilling grout injection holes in the manhole in strategic locations to redirect flow coming through cracks and other defects in the wall, or to seal the entire exterior surface of the

manhole, shall be in accordance with the grout manufacturer's recommendations. Injection holes shall be in staggered rows and near observed defects and pipe seals.

3. Grout typically shall be injected through the lowest holes first and shall proceed higher up the manhole until it is externally sealed with grout. Additional holes may be required to verify that the grout has encompassed the entire exterior of the manhole.

4. The injection holes shall be cleaned and patched as recommended by the manufacturer.

F. Field Records

1. The Contractor shall keep field records for each sewer line section prior to, during, and after completion of the chemical grouting operation. Records shall include information such as accurate locations, gel times, grout volumes, grout pressures, air temperatures, and joints not sealed due to close proximity to building service connections and sanitary sewer manholes.

3.05 TESTING FOR ACCEPTANCE/WARRANTY

A. Prior to and during the joint testing phases of the work, the Contractor shall perform control, intermediate, and final testing in accordance with ASTM F2304, ASTM F2414, and ASTM F2454.

B. Testing Sewer Joints:

1. Joint testing pressure shall be equal to 5 psi. Test pressure shall not exceed 10 psi without prior approval by the Engineer.

2. Joints in laterals which are directly connected to manholes shall be tested to 18 inches.

3. Each sewer pipe joint shall be tested at the previously-specified pressure in accordance with the following air test procedure:

a. The packer shall be positioned within the pipe so it straddles the joint to be tested.

b. The packer ends shall be expanded so the joint is isolated from the remainder of the pipe and a void area is created between the packer and the pipe joint. The ends of the testing device shall be expanded against the pipe per the manufacturer's recommendations. If all attempts to isolate the joint fail, grout shall be pumped to seal the leak around the packer end elements. The Contractor shall be paid at the unit price for grout to seal the packer unless the Engineer determines that the sewer was inadequately cleaned or the packer is not properly working.

c. Air shall then be slowly introduced into the void area until a pressure equal to or greater than the required test pressure, but in no cases greater than 2 psi above the required test pressure, is observed on the pressure monitoring equipment. When the desired pressure is reached, the air flow shall be stopped. If the void pressure decreases by more than 1.0 psi within the next 15 seconds, the joint will have failed the test and shall be sealed.

d. Upon completing the testing of each individual joint, the packer shall be deflated with the pressure meter continuing to display void pressure. If the void pressure reading does not drop to 0.0 plus or minus 0.5 psi, the test equipment shall be cleaned of residual grout material or repaired as needed to result in an accurate void pressure

reading.

C. Testing Lateral Connections:

1. Lateral connection testing pressure shall be equal to 5 psi. Test pressure shall not exceed 10 psi without prior approval by the Engineer.

2. Each lateral connection shall be tested at the previously-specified pressure in accordance with the following air test procedure:

a. The area to be tested shall be isolated using the lateral connection packer and by applying positive pressure into the isolated void area. For laterals directly connected to the main line sewer, a pan and tilt camera shall be used to position the lateral packer.

b. The lateral bladder shall be inverted from the main line assembly into the lateral pipe and inflated. The main line elements shall then be inflated to isolate the lateral connection and the portion of the lateral to be tested.

c. A sensing unit shall monitor the pressure of the packer void and shall accurately transmit a continuous readout of the void pressure to the control panel at the grouting truck or to a pressure gauge on the packer recorded by the CCTV camera.

d. Air shall then be slowly introduced into the void area until a pressure equal to or greater than the required test pressure, but in no cases greater than 2 psi above the required test pressure, is observed on the pressure monitoring equipment. When the desired pressure is reached, the air flow shall be stopped. If the void pressure decreases by more than 2.0 psi within the next 15 seconds, the lateral will have failed the test and shall be grouted and retested.

e. Upon completing the testing of each individual lateral, the lateral packer shall be deflated with the pressure meter continuing to display void pressure. If the void pressure reading does not drop to 0.0 plus or minus 0.5 psi, the test equipment shall be cleaned of residual grout material or repaired as needed to result in an accurate void pressure reading.

D. Manholes:

1. All manholes shall be visually inspected to ensure that the inflow and infiltration into the manhole has been eliminated.

E. Field Testing for Final Acceptance

1. No sooner than nine (9) months but no later than Twelve (12) months after the completion of all chemical grouting work, the Contractor shall conduct testing in an initial retest area consisting of specific sewer line sections selected by the Engineer. Sewer line segments to be retested will be randomly selected by the Engineer throughout the project area and shall be representative of a majority of sealing work performed. The initial retest area shall consist of 10% of the sewer segment lineal footage contained in the Work.

2. Within the initial retest area, Contractor shall retest designated defects previously grouted. Grouted defects which were sealed previously and fail the retest shall be resealed at no additional cost to the Owner.

3. If the failure rate of these retested defects is less than 5% of defects retested, work shall be considered satisfactory and no further retesting will be required

4. If failure rate of retested defects exceeds 5% of defects retested, an additional retest area of equivalent size shall be selected, and all grouted defects shall be retested. Additional testing and sealing, if necessary, will continue until a failure rate of less than 5% of the total retested grouted defects is met. Any additional cleaning and testing beyond the initial test area that is required due to a failure rate greater than 5% shall be at no cost to the Owner

5. Should as much as 25% of Work be retested and fail to meet the 5% requirement, the Contractor shall provide the same number of crews as utilized in the original project so that retesting will proceed at a rapid rate.

6. If 25% of the original number of joints or defects grouted fail the retest and must be re-grouted, the Contractor shall again provide a one year warranty and perform a one year retest the following year for those joints and defects re-grouted during the first one year retest.

3.06 SITE RESTORATION

A. After the grouting has been completed and accepted by the Owner, the Contractor shall restore the entire Project area and shall return the ground cover to its original or better condition. All excess material and debris not incorporated into the permanent installation shall be disposed of by the Contractor.

B. A container shall be furnished for the collection of solvents used in the cleaning of the grouting equipment. Contractor shall use an approved solvent recovery process to dispose of the collected solvents. Disposal of cleaning solvents into the sewer system or into natural watercourses is strictly prohibited.

[END OF SECTION]

SECTION 02762

SEWER SERVICE LATERAL CIPP LINING

PART 1 GENERAL

1.01 SCOPE OF WORK

A. Furnish all labor, materials, equipment, and incidentals required to install cured-in-place pipe (CIPP) lining to rehabilitate existing active service laterals as shown on the Drawings or as directed by the Engineer. Service laterals shall be lined from the connection with the main sewer to the property line or easement edge, unless otherwise noted or approved by the Engineer. A full-wrap style lining shall be used to address the connection between the main sewer and the service lateral.

B. Furnish all labor, materials, equipment, and incidentals required to conduct air testing, post-rehabilitation CCTV inspections, and other requirements described herein for final service lateral lining acceptance.

C. This specification shall also apply to installing CIPP lining for laterals discharging directly into manholes, if the pipe diameter is 6-inch or less.

D. Service laterals may be a combination of tees, wyes, or break-in taps of varying sizes (4-inch to 8-inch) with angles generally ranging up to 90 degrees. In most cases, a cleanout will be installed at the property line or easement edge.

E. If any active service laterals are identified as defective and the Contractor is unable to line the lateral from the main sewer to the cleanout, the Contractor shall inform the Engineer about the lateral's condition and shall propose a rehabilitation method that maximizes the lateral's rehabilitated length while minimizing the extent of surface disruption. The Engineer will direct the Contractor as to the acceptable approach for rehabilitating or replacing the service lateral in question.

1.02 SUBMITTALS

A. Submit the following in accordance with Section 01300 - Submittals:

1. Shop drawings and schedules for all service lateral lining and appurtenances required

2. Design data and specification data sheets listing all parameters used in the lining design

3. Thickness calculations based on ASTM F1216-09, for fully deteriorated pipe

    a. All service lateral lining design calculations shall be sealed and signed by a Florida registered professional Engineer.

4. Detailed procedure for installing the service lateral lining

5. The service lateral lining manufacturer's name and the facility location where the service lateral lining will be manufactured

6. Contractor's Qualifications. Submit copy of manufacturer's licenses certificate. A qualified bidder for installing a mainline/lateral connection and lateral repair system shall use a manufactured system with a minimum 5-year history of satisfactory performance.

The manufactured system must have a minimum of 10,000 documented successful installations in the state of Florida. A licensed and certified trainer and representative from the lining system manufacturer shall be on-site to assist in the work for a minimum of 2 weeks. This trainer shall have a minimum of 5 years' experience installing this system with 2,000 minimum installations. As an alternate requirement, the superintendent must have the same minimum installations and experience. Submit list with 10 similar jobs within the past 3 years that used this manufacturer's product. Provide project information such as project name, number of service connection laterals, date completed, and project references.

7. The following information shall be submitted for review and approval:

    a. The Contractor's years of experience in performing service lateral lining projects

    b. The name for the service lateral lining manufacturer and supplier for this work and previous work listed below. The Contractor shall be an approved installer as certified and/or licensed by the lining manufacturer.

    c. A list with municipal clients for whom the Contractor has performed this type without defects or performance problems

        (i) The list shall contain names, email addresses, and telephone numbers for persons to be contacted to verify previous satisfactory performance.

        (ii) A full description for the actual work performed

        (iii) The number of service laterals lined over the past 3 years

8. Material Certifications. Written certification is required from the manufacturer stating all materials used in the work were manufactured and tested in accordance with ASTM F1216 and is being used or installed in conformance with the manufacturer's recommendations.

9. Customer Notifications. Submit a copy of the initial customer notification as described below under Public Notification.

10. Storage and Delivery Procedures. Provide the lining manufacturer's recommended storage and delivery procedures. This shall include storage and delivery temperatures, maximum time from wet-out to installation, and other pertinent information.

11. Material Safety Data Sheets. Submit Material Safety Data Sheets (MSDS) for each component of the service lateral lining system.

12. Test Results. Prior to using any materials, furnish the proposed material's test results from an independent laboratory in conformance with these specifications. All submitted test data shall have been performed on field installed samples within the last 12 months. Testing by an independent laboratory shall verify the products to be used meet all minimum strength standards as set forth in ASTM F1216, Table 1. Testing shall also verify any product to be used on the project meets the minimum chemical resistance requirements as established in ASTM F1743, Table 2, where the testing is in accordance with Section 7.2.1 of ASTM F1743.

13. Pipe Cleaning Narrative. Submit a narrative describing in sufficient detail the proposed methods for root cutting and cleaning the existing laterals. Prepare such narrative to

include the degree of cleaning as recommended by the lining manufacturer. Such narrative shall indicate the lining manufacturer's technical representative's approval for the proposed cleaning methods.

14. Lining Thickness Calculations. Perform lining thickness calculations for each set of laterals for each manhole-to-manhole section, and furnish them to the Engineer with supporting assumptions. Calculations shall be done after cleaning, televising, and other field inspections have been accomplished. Design parameters shall be used in calculations.

15. Curing Cycle and Cooling Rate. If the lateral lining is heat-cured, submit the resin manufacturer's recommended curing cycle and the recommended cooling rate. Submit a copy of the cure logs for each lateral installation.

16. Post-lining inspection data. Submit the final television inspection in a Granite XP compatible database that shows the rehabilitated lateral.

1.03 REFERENCE STANDARDS

A. American Society for Testing and Materials (ASTM)

1. ASTM D790 – Standard Test Methods for Flexural Properties of Unreinforced and Reinforced Plastics and Electrical Insulating Materials

2. ASTM F1216 – Standard Practice for Rehabilitation of Existing Pipelines and Conduits by the Inversion and Curing of a Resin Impregnated Tube

3. ASTM F2561 – Standard Practice for Rehabilitation of a Sewer Service Lateral and its Connection to the Main Using a One Piece Main and Lateral Cured-in-Place Liner

4. ASTM F1743 – Standard Practice for Rehabilitation of Existing Pipelines and Conduits by Pulled-in-Place Installation of Cured-in-Place Thermosetting Resin Pipe (CIPP)

5. ASTM D2990 – Standard Test Methods for Tensile, Compressive, and Flexural Creep and Creep-Rupture of Plastics

B. Where reference is made to one of the above standards, the revision in effect at the time of the bid opening shall apply.

1.04 QUALITY ASSURANCE

A. The Contractor performing the service lateral lining work shall be fully qualified, experienced, and equipped to complete this work expeditiously and in a satisfactory manner. See above for description under Submittals of Contractor qualifications.

B. Be able to provide crews as needed to complete the work without undue delay and within the contract time allotted.

C. The service lateral lining shall be provided by a single manufacturer. The supplier shall be responsible for providing all test requirements specified herein as applicable.

D. The Engineer may inspect the service lateral lining after delivery. The service lateral lining shall be subject to rejection at any time if it fails to meet any requirements specified, even though sample lining may have been accepted as satisfactory at the manufacturer. Lining

rejected after delivery shall be marked for identification and removed from the job site at once.

E. Final Installed Lining Thickness. The final installed lining thickness shall not be less than or more than 10 percent greater than the required thickness. The final installed lining thickness measurement shall be determined from lining sample coupons retrieved from the sewer, plate samples or as deemed necessary by the Engineer. It shall be the Contractor's responsibility to consider site conditions and their installation process to determine the proper lining thickness to install.

F. Non-Compliance. If the flat plate samples do not meet the required 4,500 psi flexural strength and 250,000 psi flexural elasticity modulus as outlined, actual installed samples must be taken. The installed samples shall be taken as directed by the Engineer and in accordance with all applicable ASTM requirements. From these samples, the installed thickness shall be determined by taking an average of at least 10 thickness measurements. Installed samples shall then be prepared for re-testing in accordance with these specifications.

1.05 DELIVERY, STORAGE, AND HANDLING

A. Care shall be taken in shipping, handling, and storing to avoid damaging the service lateral lining. Extra care shall be taken during cold weather construction. Any lining damaged in shipment shall be replaced as directed by the Engineer.

B. Any lining showing a split or tear, or which has received a blow that may have caused damage, even though damage may not be visible, shall be marked as rejected and removed at once from the job site.

C. At all times, the lining materials, including the wet-out lining, shall be maintained at a proper temperature, such as in refrigerated facilities, to prevent premature curing prior to installation. The lining shall be protected from UV light prior to installation. Any lining showing evidence of premature curing will be rejected for use and will be removed from the site immediately.

1.06 PUBLIC NOTIFICATION

A. Notify the owners and residents of any homes or businesses whose service lateral will be affected by the lining work. Also deliver written notification to each such resident or business 3 days prior to such lining work, further advising of the work. Include in the notifications any restrictions on using the sewage system facilities. Describe exact days and hours when the sewer system cannot be used. CONTACT ANY HOME OR BUSINESS THAT CANNOT BE RECONNECTED WITHIN TIME STATED IN THE WRITTEN NOTICE.

B. THE MAXIMUM TIME ANY HOME OR BUSINESS SHALL BE WITHOUT SANITARY SEWER SERVICE IS 10 HOURS, AND NOT BETWEEN 6:00 PM AND 8:00 A.M. ANY SERVICE OUT LONGER THAN 10 HOURS WILL HAVE SERVICE RESTORED AT CONTRACTOR'S EXPENSE OR TEMPORARY MEASURES TAKEN.

1.07 GUARANTEE

A. The manufacturer shall warrant the pipe liner to be free from defects in raw materials for one (1) year from the date of delivery. The Contractor shall warrant the pipe liner installation for a period of two (2) years from the date of acceptance. During the Contractor warranty period, any defect, which materially affects the integrity or strength of the pipe liner, shall be repaired at the Contractor's expense in a manner mutually agreed to by the Owner and the Contractor.

B. If a liner fails to reform, the Contractor shall be required to remove the failed liner at no additional cost to the Owner. This shall include, but not be limited to, all material, excavation, backfilling, cutting concrete, pipe, shoring, temporary pavement, permanent pavement, permits, and other incidental work required to remove the liner from the host pipe. If removal is not feasible, or if removal will cause more harm than acceptable to the host pipe, alternatives may be proposed by the Contractor to the Engineer for review and approval. The integrity of the existing pipe, where the liner was removed, shall be rehabilitated by installing another new pipe section. There shall be no direct payment for this work.

1.08 WATER

A. The Contractor shall arrange for its water supply through Pinellas County Utilities. Usage shall be in accordance with Pinellas County backflow and metering policies. Pinellas County water usage costs shall be compensated at no markup from the water usage item established in the Contract Documents.

PART 2 PRODUCTS

2.01 MATERIALS

A. The service lateral lining shall be a seamless, corrosion-resistant, cured-in-place pipe lining product that seals the service lateral pipe and the junction between the service lateral pipe and main sewer. The portion of the lateral lining system that connects to the main/lateral interface shall be either a full-wrap or brim-seal connection type.

B. The service lateral lining shall be a resin-impregnated, flexible polyester felt, non-woven textile tube, needle punched felt, circular knit or circular braid, glass fiber reinforced plastic or equivalent material tube which is cured -in-place by an acceptable curing method. The tube shall be able to conform to bends, offset joints, bells, and disfigured pipe sections.

C. The service lateral shall provide a 50-year service life and shall have the minimum structural properties listed below:

Physical Properties	Minimum Standard
Flexural Strength (ASTM D790)	4,500 psi
Flexural Modulus of Elasticity (ASTM D790)	250,000 psi

D. The service lateral shall be designed, fabricated, and installed for the actual conditions encountered for this application including the host pipe material, in accordance with the applicable ASTM F1216, ASTM D2990 provisions, and shall meet the following minimum design conditions:

1. AASHTO H-20 live load with two trucks passing
2. Soil Weight 120 pounds per cubic foot
3. Friction coefficient Ku′ =0.130
4. Estimated maximum groundwater level at ground surface
5. Fully deteriorated pipe with 2 percent (min.) ovality. If existing pipe's ovality is found to be worse, use actual percent up to 5 percent (max.).

6. Soil Modulus 1,000 psi

7. Safety factor = 2

8. Soil Depth: The cover depth will be determined by field measurements.

E. The finished lining shall have a 3 mm minimum thickness for 4-inch laterals and 4.5 mm for 6-inch laterals.

F. The service lateral lining shall have sufficient wall thickness to withstand all anticipated external pressures and loads that may be imposed after installation. The design shall be performed and certified by a Florida registered professional Engineer.

G. The service lateral lining shall be manufactured and installed by T-Liner by LMK, SCS+L by BLD Services, LLC, or approved equal.

H. When cured, the service lateral lining shall extend from the mainline into the lateral connection in a continuous tight fitting, watertight pipe-within-a-pipe to eliminate any visible groundwater leakage and future root growth at the lateral to mainline connection and along the lateral. The service lateral product system shall be compatible with the mainline and/or lateral pipe or lining. The lining portion within the mainline pipe may be a full-wrap or brim-seal connection or style.

I. When cured, the finished service lateral product shall be chemically resistant to domestic sewage over the rehabilitated pipe's expected lifetime. The lining material and resin shall be completely compatible.

J. The connection between the service lateral and the main sewer shall be lined so a continuous overlap between the service lateral lining and the main sewer extends 3-inches minimum from the lateral along the entire circumference.

K. A leak-free seal must be created to form a sealing bond between the service lateral product and the host lateral and mainline pipe walls. The Contractor should use either a hydrophilic) material or an epoxy-sealing component at each lining tube end to provide a leak-free seal.

L. When cured, the lining shall form a hard, impermeable lining which is chemically resistant to chemicals found in domestic sewage.

2.02 RESIN

A. The resin system shall meet the requirements of ASTM F1216, Section 5.2. The resin installed service lateral lining system shall produce a service lateral that will comply with the structural requirements specified herein, and shall provide chemical resistance for the flow media in the gravity pipe. The resin shall be compatible with the rehabilitation process, shall be able to cure in water's presence or absence, and shall have an initiation temperature for cure as recommended by the resin manufacturer. Unless otherwise specified, provide a general purpose or enhanced strength unsaturated, thermosetting, polyester, vinyl ester, epoxy or silicate resin and a catalyst system compatible with the installation process. The resin shall be vacuum impregnated into the lining.

B. Submit documentation from the resin manufacturer specifically describing the resin system's chemical characteristics including allowable mixing, impregnation, and handling time, transportation, and storage time, and recommended curing cycle including temperatures, pressures, and times. The resin manufacturer's documentation must also include maximum

allowable time for handling the impregnated tube prior to insertion and the maximum allowable elapsed time from insertion to exotherm. If remedial measures are available to extend either of the maximum allowable times indicated above, without affecting the resin's physical properties, the resin manufacturer should describe these measures and the time limits beyond which even these measures will not prevent altering the resin's physical properties.

PART 3 EXECUTION

3.01 PRE-INSTALLATION

A. In accordance with Section – 02731, Television Inspection, a pre-rehabilitation digital CCTV video inspection must be done on the mainline pipe with a pan and tilt camera and the service lateral to confirm the proposed repair falls within the limitation parameters set by the manufacturer on the following aspects:

1. The location and clock reference of the lateral junctions to be lined
2. Any offsets, any intrusions from the lateral into the main
3. Angle at which the connection comes in
4. Any changes in the lateral's approach angle for the repair length
5. Potential flows coming throughout the lateral pipe
6. Potential flows going through the main pipe
7. Diametric connection size for the lining length
8. Main pipe's size at the service lateral point
9. Service lateral's condition including the presence of debris, turns, bends, changes in diameter, or other observations
10. Active infiltration present within the work area vicinity
11. Any defects noted in the mainline pipe or lateral should be documented using NASSCO PACP/LACP Standards.

B. Inform the Engineer about service laterals in which a service lateral lining cannot be installed from the main sewer to the cleanout established at the property line or easement line. The Contractor shall identify these service laterals and provide the Engineer with documentation about the conditions encountered including the CCTV inspection. If a full length lateral lining cannot be installed or a point repair on the service cannot be performed, the Engineer may direct the Contractor to install a short lateral lining with no cleanout required extending up the lateral from the main. The length is to be field determined to the maximum length possible, but should extend 3 feet minimum up the lateral from the main

C. Inform the Engineer about service laterals in which a short length service lateral product cannot be installed. The Contractor shall identify, document, and video record these services, and inform the Engineer about the conditions encountered. If a short length lateral lining cannot be installed, the service connection will be "cut and buffed" to restore a 95% minimum service opening.

3.02 LINE PREPARATION

A. Prior to installing the service lateral product, the area around the lateral sealing surface in the main and lateral shall be inspected. Waste product build-up, hard scale, roots, lateral cutting debris, or resin slugs must be removed using high pressure water jetting or in-line cutters. All laterals to be lined shall be cleaned as required prior to lining. The term “cleaned” shall mean removing all sand, dirt, roots, grease, and other solids or semisolid materials from the interior face of the sewer mainlines and the service laterals.

B. Built-up deposits on the main and lateral pipe walls shall be removed. The removal shall reach at least 1 foot beyond the scheduled service lateral installation length to allow the bladder to inflate tightly against the pipe walls ensuring a smooth transition from service lateral product to the existing pipe wall.

C. Televise the lateral to provide a detailed record of existing conditions and lateral connections. Have a copy of the pre-lining inspections in the field. Immediately prior to lining insertion, the camera shall traverse the lateral to inspect for debris which may have entered the line after the existing condition inspection.

D. Where active infiltration is present and when it is recommended by the service lateral lining manufacturer, the infiltration must be stopped in advance by grouting.

E. Additional precautions need to be taken when applying the sleeve to a main pipe lined with a CIPP lining with a polyolefin coating. The coating is to be lightly scarified, scraping off the coating in the main CIPP in the service lateral lining’s vicinity and verified by the Engineer. This scuffing is mandated for service lateral linings required to adhere to the pipe wall. Service lateral linings with hydrophilic material are not required to have the existing lining scarified.

F. The Contractor shall be responsible, if needed, for bypassing sewage while installing the service lateral lining product. In cases where the temporary sewage backup is accepted as a replacement for bypassing, the Contractor shall be responsible for all damage caused by sewage backing up into properties or sanitary sewer overflows.

3.03 INSTALLATION

A. CIPP lining of the service lateral shall be from the main sewer to the existing cleanout at the property line. If a cleanout does not exist, the Contractor shall install a cleanout at the property line at a location designated by the Engineer and terminate the rehabilitation or replacement pipe at this new cleanout.

B. The service lateral lining shall be vacuum-impregnated with resin (wet-out) under controlled conditions. The resin volume used shall be sufficient to fill all voids in the textile lining material at nominal thickness and diameter. The volume shall be adjusted by adding 5% to 10% excess resin for the change in resin volume due to polymerization and to allow for any resin migration into the cracks and joints in the original pipe. All resin shall be contained within the translucent bladder during vacuum impregnations. No dry or unsaturated area in the lateral tube shall be acceptable upon visual inspection.

C. The service lateral product shall be loaded on the applicator apparatus, attached to a robotic manipulator device, and positioned at the cleanout or pipe opening of the service connection that is to be rehabilitated. For service lateral full-wrap style linings with compression gaskets, the mainline lining and bladder shall be wrapped around the "T" launching device and held firmly by placing 4 hydrophilic material bands around the main lining. For service lateral full-

wrap linings that do not use hydrophilic material, a 300 ml volume adhesive sealant, shall be applied to the main/lateral interface, and shall be applied as a 2-inch wide band on the main lining.

D. The pressure apparatus shall include a bladder with sufficient length in the main and lateral lines so the inflated bladder extends beyond the ends of the service lateral product's lateral tube and main line tube, pressing the end edges flat against the internal pipe wall, thus forming a smooth transition from service lateral product to pipe diameters without a step, ridge, or gap between the service lateral product and the lateral and mainline pipes' inner diameters.

E. For service lateral linings with hydrophilic materials, the main bladder shall be inflated causing the main sheet to unwrap and expand, embedding the hydrophilic material between the main lining and the main pipe as the main lining is pressed tight against the main pipe.

F. After insertion is completed, recommended pressure must be maintained on the impregnated service lateral product according to ASTM F1216-09, Sections 7.4.2 and 7.4.3, pressing the lining firmly against the inner pipe wall during the entire curing process. The lining shall be cured at ambient temperatures or by a suitable heat source. In no instance will sewage be used to invert or cure linings or calibration tubes.

G. The finished service lateral lining shall be free from dry spots, lifts, and delamination. The installed service lateral lining should not inhibit the CCTV post installation video inspection for the mainline and service lateral pipes or future pipe cleaning operations. For service lateral linings with compression gaskets, the CIPP shall taper at each end providing a smooth transition to accommodate video equipment and maintain proper flow in the mainline. In all cases, the finished product must provide an airtight/watertight verifiable non-leaking connection between the main sewer and sewer service lateral. During the warranty period, any defects with the service lateral that affect the lateral connection's performance, cleaning, or watertightness shall be repaired at the Contractor's expense in a manner acceptable to Owner.

H. Following the lining installation, provide the Engineer with an electronic picture and recorded data identifying the location and showing the completed work and restored condition for all the rehabilitated service laterals from the sewer main to the service reconnection point. The Contractor shall televise the rehabilitated lateral to provide a detailed record of finished conditions using NASCCO PACP/LACP guidelines. When complete, the Contractor shall submit the rehabilitated lateral inspections in a Granite XP-compatible database and the accompanying logs on DVDs or an external USB hard drive.

3.04 FIELD TESTING AND ACCEPTANCE

A. The lining's field acceptance shall be based on the Engineer's evaluation of the installation including post-lined digital CCTV inspection and reviewing certified test data for the installed pipe samples. The CCTV inspection for each lateral shall extend 10 feet minimum past the end of the rehabilitation work on the service lateral. For laterals where a cleanout was installed, the CCTV inspection shall include the cleanout and the connection to the existing, undisturbed service lateral.

B. The lining shall have zero groundwater infiltration, and each lateral must pass a 2-minute 4 psi air test conducted by the Contractor.

C. A flat plate sample shall be collected for every 50 lateral installations, and the sample shall be submitted to a third party testing laboratory to confirm strength properties (flexural

strength and flexural modulus) in accordance with ASTM F1216. The test results must meet or exceed the strengths in the design, or the Contractor must provide a 10% credit for up to 50 laterals the sample represents.

D. All service connections shall be open, clear, and watertight.

E. The lining shall have no evidence of splits, cracks, breaks, lifts, kinks, delaminations, or crazing.

F. If any defective lining is discovered after it has been installed, it shall be removed and replaced by the Contractor with a new lining, a new pipe, or other measures with the Engineer's approval at no additional cost to Owner. Any lining installation not meeting specified strengths or thickness shall provide other acceptable remediation measures or credit as approved by the Engineer. The re-inspection requirements as listed above shall apply to this re-installed section of line.

3.05 CLEAN-UP

A. After the installation work and testing have been accepted, restore the project area affected by the operations to a condition at least equal to what existed prior to the work.

[END OF SECTION]

SECTION 02934

SODDING

PART 1 – GENERAL

1.01 SCOPE

A. Provide all labor, materials, and equipment necessary for preparation of subsoil, placing topsoil, fertilizing, sod installation, and maintenance as required to complete Work as shown on the Drawings and specified in this Section.

B. This shall include, but not be limited to:

1. Testing of topsoil.

2. Raking and leveling topsoil as required for sodding.

3. Liming and fertilizing of topsoil.

4. Laying and rolling of sod.

5. Maintaining sod.

1.02 REFERENCES

A. ASPA (American Sod Producers Association) – Guideline Specifications to Sodding.

B. FS O-F-241 – Fertilizers, Mixed, Commercial.

1.03 QUALITY ASSURANCE

A. Sod Producer: Company specializing in sod production and harvesting with minimum five years of experience and certified by the State of Florida.

B. Installer: Company approved by the sod producer.

C. Sod: Minimum age of 18 months, with root development that will support its own weight, without tearing, when suspended vertically by holding the upper two corners.

D. Submit sod certification for grass species and location of sod source.

1.04 REGULATORY REQUIREMENTS

A. Comply with regulatory agencies for fertilizer and herbicide composition.

1.05 DELIVERY, STORAGE, AND HANDLING

A. Sod shall be machine cut and delivered to the Site on pallets. Protect exposed roots from dehydration.

B. Do not deliver more sod than can be laid within 24 hours of delivery.

1.06 MAINTENANCE SERVICE

A. Maintain installed sod until Owner has accepted Work.

PART 2 – PRODUCTS

2.01 MATERIALS

A. Fertilizer

1. Fertilizer shall be commercial fertilizer, as manufactured by International Chemical Company or approved equal.

2. Fertilizer shall have a 10 20 6 N.P.K. content and contain a minimum of 60% of organic material.

3. It shall be delivered at the site in the original sealed containers.

4. Fertilizer content and application rate shall comply with Pinellas County Code of Ordinances, Chapter 58, Article XIII.

B. Sod

1. The sod shall be as grown by a certified nursery grace, cultivated grass sod with fibrous root system, free of stones and burned or bare spots.

2. Sod shall be furnished and installed in rectangular sod strips measuring 12 to 16 inches in width of standard lengths of not less than 2 feet. The area of each section of sod shall not exceed one square yard with minimum ½-inch topsoil base.

3. After the preparation of the areas to be sodded has been approved sod all disturbed areas where no permanent construction exists. Supply and install sod to match existing sod. For areas scheduled to receive new sod that do not have an existing sod to match, provide the following sods, unless otherwise directed, for stabilization of final grade:

a. Irrigated and non-irrigated areas: Sod composed of grasses grown from a Bahia Seed mixture.

C. Accessories

1. Wood Pegs: Softwood; sufficient size and length to ensure anchorage of sod on slope.

2. Wire Mesh: Interwoven hexagonal metal wire mesh of 2 size.

PART 3 – EXECUTION

3.01 INSPECTION

A. Verify that prepared soil base is ready to receive the work of this Section.

B. Beginning of installation means acceptance of existing site conditions.

3.02 PREPARATION OF SUBSOIL

A. Prepare subsoil to eliminate uneven areas and low spots. Maintain lines, levels, profiles, and contours. Make changes in grade gradual. Blend slopes into level areas.

B. Remove foreign materials and undesirable plants and their roots. Do not bury foreign material beneath areas to be sodded. Remove contaminated subsoil.

C. Scarify subsoil to a depth of 4 inches where topsoil is to be placed. Repeat cultivation in areas where equipment, used for hauling and spreading topsoil, has compacted subsoil.

3.03 PLACING TOPSOIL

A. Fine grade to achieve the finished subgrade after compaction which shall be obtained by rolling, dragging or by an approved method which obtains an equivalent compaction to that produced by a hand roller weighing from 75 to 100 pounds per foot of width. All depressions caused by settlement or rolling shall be filled with additional existing or furnished topsoil and regraded and prepared as specified above until it presents a reasonably smooth and even finish at the required sod sub grade.

B. Spread topsoil to a minimum depth of 2 inches over area to be sodded.

C. Place topsoil during dry weather and on dry subgrade.

D. Remove vegetable matter and foreign non-organic material while spreading.

E. Grade to eliminate rough, low, or soft areas, and to ensure positive drainage.

3.04 FERTILIZING

A. Apply fertilizer in accordance with manufacturer's instructions.

B. Apply fertilizer in accordance with Pinellas County Code of Ordinances, Chapter 58, Article XIII.

1. No applicator shall apply fertilizers containing nitrogen and/or phosphorous to turf and/or landscape plants during the restricted season from June 1 through September 30.

2. No applicator shall apply fertilizers containing nitrogen and/or phosphorus to turf and/or landscape plants during a period for which the National Weather Service has issued any of the following advisories for any portion of Pinellas County: a severe thunderstorm warning or watch, flood warning or watch, tropical storm warning or watch, hurricane warning or watch, or if rain greater than or equal to two inches in a 24-hour period is forecasted.

C. Apply after smooth raking of topsoil and prior to installation of sod.

D. Apply fertilizer no more than 48 hours before laying sod.

E. Mix thoroughly into upper 2 inches of topsoil.

F. Lightly water to aid the dissipation of fertilizer.

3.05 INSTALLATION

A. All sod furnished shall be living sod containing at least 70% of thickly matter grasses as specified and free from noxious weeds.

B. No broken pads or torn or uneven ends will be accepted. Standard size sections of sod shall be strong enough to support own weight and retain their size and shape when suspended vertically with a firm grasp on the upper 10% of the section. Sod shall not be harvested when its moisture content (excessively wet or dry) may adversely affect its survival.

C. Sod shall be harvested, delivered, and installed within a period of 24 hours. Sod not installed within this time period shall be subject to inspection and rejection by Engineer, and shall be removed from the side and a fresh sod supply shall be furnished at no extra cost to Owner.

D. The topsoil shall not be moist at time of installation; however, it shall contain sufficient moisture so as not be powdery or dusty, both as determined by the supplier's representative.

E. The overlapping of existing lawn with new sod along limit of work lines will not be permitted. Sod shall be laid in strips, edge to edge, with the lateral joints staggered. All minor or unavoidable openings in the sod shall be closed with sod plugs or with topsoil, as directed by Engineer. However, sod laid with joints determined to be too large shall be lifted and reinstalled as specified herein at no extra cost to Owner. Lay sod tight with no open joints visible, and no overlapping; stagger end joints 12 inches minimum. Do not stretch or overlap sod pieces.

F. Immediately after the sod is laid, the sod shall be watered thoroughly by hand or mechanical sprinkling until the sod and at least 4 inch of the topsoil bed have been thoroughly moistened.

G. Contractor shall be responsible to furnish his own supply of water to the site at no extra cost. If possible, Owner shall furnish Contractor, upon request, with a source and supply of water. Contractor shall apply for temporary meter and pay Owner for water used at current utility billing rates. However, if Owner water supply is not available or not functioning, Contractor shall be responsible to furnish adequate supplies at his own cost. All work damaged due to the lack of, or the use of too much water, shall be Contractor's responsibility to correct.

H. Lay smooth. Align with adjoining grass areas. Place top elevation of sod 1/2 inch below adjoining paving or curbs.

I. On slopes 6 inches per foot and steeper, lay sod perpendicular to slope and secure every row with wooden pegs at maximum 2 feet on center. Drive pegs flush with soil portion of sod.

J. Prior to placing sod on slopes exceeding 8 inches per foot or where indicated, place wire mesh over topsoil. Securely anchor sod in place over wire mesh and topsoil with wood pegs sunk firmly into the ground.

K. After sod and soil have dried, roll sodded areas to ensure good bond between sod and soil and to remove minor depressions and irregularities. Roll sodded areas with roller not exceeding 150 lbs. per foot of roller width.

3.06 MAINTENANCE

A. Maintain the entire sodded areas until final acceptance at the completion of the Contract. Maintenance shall include watering as specified, weeding and removal of stones which may appear. All bare or dead spots which become apparent shall be properly prepared, limed and fertilized, and resodded at Contractor's expense as many times as necessary to secure a good

growth. In the event that the sod installation is not accepted by Engineer, the entire area shall be maintained and cut by Contractor until final acceptance of the sod installation.

B. Take whatever measures are necessary to protect the sod while it is developing. These measures shall include furnishing or warning signs, barriers, or any other necessary measures of protection.

C. Mow grass at regular intervals to maintain at a maximum height of 2½ inches.

D. Neatly trim edges and hand clip where necessary.

E. Immediately remove clippings after mowing and trimming.

F. Water to prevent grass and soil from drying out.

G. Roll surface to remove minor depressions or irregularities.

H. Control growth of weeds. Apply herbicides in accordance with manufacturer's instructions. Remedy damage resulting from improper use of herbicides.

[END OF SECTION]

SECTION 02944

SEEDING

PART 1 – GENERAL

1.01 WORK INCLUDED

A. Preparation of subgrade to receive topsoil.

B. Seeding and fertilizing.

C. Seed protection on slopes.

D. Hydroseeding.

E. Maintaining seeded areas until acceptance.

1.02 RELATED WORK

A. Section 01410, Testing Laboratory Services.

B. Section 02550, Finish Grading.

1.03 QUALITY ASSURANCE

A. Test topsoil in accordance with Section 01410, Testing Laboratory Services.

B. Supply written analysis stating N, P, and K requirements, application rates, organic matter content, and pH value of soil.

C. Prior to seeding, the Contractor shall submit a proposed seed and seeding schedule, including the source of seed and contents by percent weight. No seed shall be purchased, nor work shall be performed until the seed mixes and schedule are approved.

D. Prior to seeding, Contractor shall perform compaction testing and forward results to Engineer for approval.

1.04 DELIVERY, STORAGE, AND HANDLING

A. Deliver grass seed in original containers showing analysis of seed moisture, percentage of pure seed, year of production, net weight, date of packaging and location of packaging. Damaged packages are not acceptable.

B. Deliver fertilizer in new, unopened waterproof bags showing weight, chemical analysis, and name of manufacturer.

1.05 EXISTING CONDITIONS

A. Beginning work means acceptance of existing conditions.

PART 2 – PRODUCTS

2.01 MATERIALS

A. Seed

1. Grass seed shall be a mixture of equal parts of Bermuda seed and Pensacola Bahia, except that during the winter months, if so directed by the Engineer, rye grass seed or other approved winter cover crop seed may be substituted for the Bermuda seed. The two types of seed used shall be thoroughly dry mixed immediately before sowing. Seed which has become wet or moldy shall not be used.

2. The Bermuda seed shall be hulled seed. The Pensacola Bahia seed shall be scarified seed, having a minimum active germination of 40 percent and a total germination of 85 percent. All seed shall meet the requirements of the Florida State Department of Agriculture and all applicable State laws, and shall be approved by the Engineer before being sown.

B. Mulch

1. Mulch shall not be used as ground cover or soil amendment and may only be used for plantings with Owner approval.

C. Commercial Fertilizer

1. Commercial fertilizers shall comply with the State fertilizer laws.

2. The numeral designations for fertilizer indicate the minimum percentages (respective) of: (1) total nitrogen, (2) available phosphoric acid, and (3) water soluble potash, contained in the fertilizer.

3. The chemical designation shall be 8-8-8. Other designations may be approved specifically for a particular project; and if liquid fertilizer other than that of chemical designation 8-8-8 is used, the total nitrogen content shall not exceed 12 percent.

4. Either dry or liquid fertilizer may be used.

5. Fertilizer content and application rate shall comply with Pinellas County Code of Ordinances, Chapter 58, Article XIII.

D. Water for Grassing

1. The water used in the grassing operations may be obtained from any approved spring, pond, lake, stream, or municipal water system. The water shall be free of excess and harmful chemicals, acids, alkalis, or any substance which might be harmful to plant growth or obnoxious to traffic. Salt water shall not be used. Municipal water shall be metered. Contractor shall apply for temporary meter and pay current utility billing rates.

2.02 EQUIPMENT

A. Fertilizer Spreader: The device for spreading dry fertilizer or for spraying liquid fertilizer shall meet the approval of the Engineer.

B. Seed Spreader: The seed spreader shall be an approved mechanical hand spreader or other approved type of spreader and may be integral with the cultipacker rolling equipment specified

below.

C. Rollers: A cultipacker, traffic roller, or other roller approved by the Engineer, will be required for rolling the grassed areas.

D. Water Metering Devices: The vehicle used for applying the water to the grassed areas shall be equipped with an approved metering device installed at such point on the vehicle as to measure the water at the time of its being applied to the grassed areas.

PART 3 – EXECUTION

3.01 INSTALLATION

A. General

1. Fertilizing and seeding operations will not be permitted when wind velocities exceed 15 miles per hour. Seed shall be sown only when the soil is moist and in proper condition to induce growth.

2. All soil manipulation shall be done at right angles to the direction of slope.

3. The soil shall be maintained in a moist condition for a period of at least two weeks after the planting.

B. Applying and Mixing Fertilizer

1. At the Contractor's option either dry or liquid commercial grade fertilizer may be used.

2. The fertilizer content and rate of application shall comply with Pinellas County Code of Ordinances, Chapter 58, Article XIII.

3. The fertilizer shall be spread or sprayed uniformly over the area to be grassed by use of the approved distributing device, except that on steep slopes or other areas where machine spreading may not be practicable, spreading may be done by hand or by hose if the Engineer so directs. Immediately after dry fertilizer is spread it shall be harrowed in and mixed with the soil to a depth of approximately four inches. When liquid fertilizer is used, the Soil, if dry, shall be moistened by sprinkling before the liquid fertilizer is applied. Liquid fertilizer shall be applied no later than seven days after the seed is in place.

4. Apply fertilizer in accordance with Pinellas County Code of Ordinances, Chapter 58, Article XIII.

a. No applicator shall apply fertilizers containing nitrogen and/or phosphorous during the restricted season from June 1 through September 30.

b. No applicator shall apply fertilizers containing nitrogen and/or phosphorus during a period for which the National Weather Service has issued any of the following advisories for any portion of Pinellas County: a severe thunderstorm warning or watch, flood warning or watch, tropical storm warning or watch, hurricane warning or watch, or if rain greater than or equal to two inches in a 24-hour period is forecasted.

C. Seeding:

1. While the soil is still loose and moist, the seed shall be scattered uniformly over the grassing area.

2. The rate of spread for the seed shall be as follows:

    a. Rate shall be 60 pounds per acre. In the period from March 15th to October 15th the seed mixture shall be 30 pounds of bahia and 30 pounds of Bermuda. In the remainder of the year the mixture shall be 20 pounds each of bahia, Bermuda, and rye seed.

3. Seeding may be done in conjunction with rolling if the equipment used is designed for that purpose.

D. Rolling: Immediately after completion of the seeding, the entire grassed area shall be rolled thoroughly with the equipment specified. At least two trips over the entire area will be required.

E. Seed Protection on Slopes

1. Cover seeded slopes where grade is 3:1 or greater with jute matting. Roll matting down over slopes without stretching or pulling.

2. Lay matting smoothly on soil surface, burying top end of each section in a narrow six inch deep trench. Leave 12-inch overlap from top roll over bottom roll. Leave four-inch overlap over adjacent section.

3. Staple outside edges and overlaps at 36-inch intervals.

4. Lightly dress slopes with topsoil to ensure close contact between matting and soil.

5. In ditches, unroll matting in direction of flow. Overlap ends of strips by six inches with upstream section on top.

3.02 MAINTENANCE PERIOD

A. Maintenance period shall be until final acceptance.

3.03 MAINTENANCE

A. Maintain surfaces and supply additional topsoil where necessary, including areas affected by erosion.

B. Water to ensure uniform seed germination and to keep surface of soil damp.

C. Apply water slowly so that surface of soil will not puddle and crust.

D. Cut grass first time when it reaches height of 2 1/2 inches and maintain to minimum height of two inches. Do not cut more than 1/3 of blade at any one mowing. Remove clippings.

E. After first mowing, water grass sufficiently to moisten soil from three to five inches deep.

F. Apply weed killer when weeds start developing, during calm weather when air temperature is above 50 degrees F.

G. Replant damaged grass areas showing root growth failure, deterioration, bare or thin spots, and eroded areas.

3.04 RESTORATION

A. Restore pavement, concrete, grassed areas, planted areas, and structures damaged during execution of work of this section.

3.05 ACCEPTANCE

A. Seeded areas will be accepted at end of maintenance period when seeded areas are properly established and otherwise acceptable.

[END OF SECTION]

SECTION 03400

PRECAST CONCRETE

PART 1 GENERAL

1.01 SCOPE

A. Furnish all labor, materials, equipment, engineering design, fabrication, incidentals, transportation, erection, forming, shoring, and supervision and perform all operations necessary to complete all pre-cast concrete and related work called for by the Drawings and/or Specifications, or reasonably inferable from either or both, including but not limited to the following:

B. Pre-cast keystone joints, corbels, and all required shoring and leveling, all designed/produced/furnished/installed by the approved fabricator.

C. Shop Drawings: Sealed by the Firm's Professional Engineer registered in Florida.

D. Design Calculations: Sealed by the Firm's Professional Engineer registered in Florida.

E. Reinforcing: All types including all additional shear, moment and temperature bars required by the Drawings.

F. Finishing and curing of prefabricated units: In Situ concrete placing and finishing shall also comply to Section 03300 "Cast In Place Concrete".

G. In addition to the Shop Drawing requirements of the General Conditions, the shop and erection drawings shall include a large scale detail of connections and joints in the structure involving pre-cast units. Every unit shall bear an erection mark on the Shop Drawing.

1.02 CONDITIONS AND REQUIREMENTS

A. All Work in this section shall be accomplished by a recognized pre-cast concrete composite framing system fabrication firm whose design, fabrication and erection operations are supervised and controlled by a Florida Registered Professional Engineer who is an officer or full time employee of the firm. The firm shall have had a minimum of 10 years in this specific business and shall have a fabrication plant in Florida capable of producing the required units on schedule. Items delivered to the site for use in the Work shall be available for inspection.

1.03 REFERENCE SPECIFICATIONS, CODES, AND STANDARDS

A. Without limiting the generality of other requirements of these Specifications, all work specified herein shall conform to the applicable requirements of the following documents. All referenced specifications, codes, and standards refer to the most current issue available at the end of the Bid.

1. Florida Building Code

2. ACI 318-19 Building Code Requirements for Structural Concrete

3. PCI Standard MNL-116 - Manual for Quality Control for Plants and Production of Precast and Prestressed Concrete Products

4. PCI Design Handbook

1.04 DESIGN, MANUFACTURE, AND PRODUCTION

A. General: Design, materials, fabrication and installation shall conform to ACI 318 77 and to additional requirements of the Standard Building Code. Units shall be designed by manufacturer's Registered Engineer.

B. Design: Units shall be of sizes, shapes and dimensions indicated on Plans and designed to safely support the indicated minimum superimposed live loads, not including weight of concrete slabs, curbs, walls or other permanently supported dead load. Maximum deflection under live load 1/360th of span, considered at mid span. Maximum camber at mid span under dead load shall not exceed 3/8 inch.

C. Workmanship: Units shall be plant fabricated, transported and erected by methods prescribed in PCI Standards. Units damaged in any way will be rejected. Units with visible cracks will not be permitted and if installed will be rejected and ordered removed and replaced at Contractor's expense.

D. Finish: Manufacturer shall be solely responsible for true, smooth surfaces free of pock marks and/or honeycombs. Smooth forms and proper vibration for the correct lengths of time during manufacture are mandatory.

1.05 SUBMITTALS

A. Submit samples and/or Shop Drawings in accordance with Section 01300 - Submittals.

B. Submittals shall include, but not be limited to:

1. Shop drawings for all precast concrete items showing all dimensions, locations, and type of lifting inserts, and details of reinforcement and joints.

2. A list of the design criteria used by the manufacturer for all manufactured, precast items.

3. Certified reports for all lifting inserts, indicating allowable design loads.

4. Information on lifting and erection procedures.

5. Complete layout and installation Drawings and schedules with clearly marked dimensions.

6. Material certificates on all piping materials.

7. Structural design calculations sealed by a P.E. registered in the State of Florida. Design calculations for precast manholes and vaults shall include confirmation structures adequately resist flotation when they are totally empty and subjected to groundwater full height of structure.

8. Results of leakage test.

1.06 QUALITY ASSURANCE

A. All manufactured precast concrete units shall be produced by an experienced manufacturer regularly engaged in the production of such items. All manufactured precast concrete and

site-cast units shall be free of defects, spalls, and cracks. Care shall be taken in the mixing of materials, casting, curing and shipping to avoid any of the above. The Engineer may elect to examine the units at the casting yard or upon arrival of the same at the site. The Engineer shall have the option of rejecting any or all of the precast work if it does not meet with the requirements specified herein or on the Drawings. All rejected work shall be replaced at no additional cost to the Owner.

B. Manufacturer Qualifications

The precast concrete manufacturing plant shall be certified by the Prestressed Concrete Institute, Plant Certification Program, prior to the start of production. Certification is only required for plants providing prestressed structural members such as hollow core planks, double-T members, etc.

C. Plant production and engineering must be under direct supervision and control of an Engineer who possesses a minimum of five years experience in precast concrete work.

PART 2 PRODUCTS

2.01 MATERIALS

A. Cement: ASTM C 150, Domestic Portland, Type II.

B. Concrete

1. For prestressed concrete items, minimum compressive strength of concrete at 28 days shall be 5,000 psi unless otherwise specified. Minimum compressive strength of concrete at transfer of prestressing force shall be 3,500 psi unless otherwise specified.

2. For non-prestressed concrete items, minimum compressive strength of concrete at 28 days shall be 4000 psi unless otherwise specified.

C. Grout

1. Minimum compressive strength of grout at 7 days shall be 3,000 psi.

D. Prestressing Strands

1. Prestressing strands shall be 7-wire, stress-relieved, high-strength strands Grade 250K or 270K

E. Steel Inserts

1. All steel inserts protruding from or occurring at the surface of precast units shall be galvanized

F. Bearing Pads

1. Plastic bearing pads shall be multi-monomer plastic strips which are non-leaching and support construction loads with no visible overall expansion, manufactured specifically for the purpose of bearing precast concrete.

G. Aggregate: Comply with Section 03300.

H. Water: Potable

I. Reinforcing for joists:

1. Deformed Bars: Domestic, new, made from Billet Steel conforming to ASTM A615, Grade 60.

PART 3 EXECUTION

3.01 FABRICATION AND CASTING

A. All precast members shall be fabricated and cast to the shapes, dimensions and lengths shown on the Drawings and in compliance with PCI MNL-116. Precast members shall be straight, true and free from dimensional distortions, except for camber and tolerances permitted later in this clause. All integral appurtenances, reinforcing, openings, etc., shall be accurately located and secured in position with the form work system. Form materials shall be steel and the systems free from leakage during the casting operation.

B. All cover of reinforcing shall be the same as detailed on the Drawings.

C. Because of the critical nature of the bond development length in prestressed concrete panel construction, if the transfer of stress is by burning of the fully tensioned strands at the ends of the member, each strand shall first be burned at the ends of the bed and then at each end of each member before proceeding to the next strand in the burning pattern.

D. The Contractor shall coordinate the communication of all necessary information concerning openings, sleeves, or inserts to the manufacturer of the precast members.

E. Grout all recesses due to cut tendons which will not otherwise be grouted during erection.

F. Use of a membrane curing compound will not be allowed.

G. The manufacturer shall provide lifting inserts or other approved means of lifting members.

3.02 HANDLING, TRANSPORTING AND STORING

A. Precast members shall not be transported away from the casting yard until the concrete has reached the minimum required 28 day compressive strength and a period of at least 5 days has elapsed since casting, unless otherwise permitted by the Engineer.

B. No precast member shall be transported from the plant to the job site prior to approval of that member by the plant inspector. This approval will be stamped on the member by the plant inspector.

C. During handling, transporting, and storing, precast concrete members shall be lifted and supported only at the lifting or supporting points as indicated on the shop drawings.

D. All precast members shall be stored on solid, unyielding, storage blocks in a manner to prevent torsion, objectionable bending, and contact with the ground.

E. Precast concrete members shall not be used as storage areas for other materials or equipment.

F. Precast members damaged while being handled or transported will be rejected or shall be

repaired in a manner approved by the Engineer.

3.03 INSTALLATION/ERECTION

A. Erection/installation by manufacturer of units and performed by experienced and competent mechanics regularly employed in this type of work under supervision of Firm's Registered Engineer. Adequate handling and lifting equipment must be used. Include all leveling, special anchorages and special cutting for finish fitting.

B. All units shall be carefully lifted, transported and erected in such manner that they will suffer no damage. Provide soft wood shims for temporary support during transport and erection.

C. Erectors shall inspect all bearing surfaces for level, smoothness and uniform bearing. Notify Engineer if for any reason there are defects detrimental to installation of units. Erection of units shall signify acceptance of surface.

D. Clean all bearing surfaces prior to erection.

E. Powder actuated fasteners not permitted in pre-cast unit.

F. Drilling of hole in units at job site not permitted unless done under the supervision of fabrication firm's Registered Engineer.

G. Grouting between adjacent precast members and along the edges of the assembled precast members shall be accomplished as indicated on the drawings, care being taken to solidly pack such spaces and to prevent leakage or droppings of grout through the assembled precast members. Any grout which seeps through the precast members shall be removed before it hardens.

H. In no case shall concentrated construction loads, or construction loads exceeding the design loads, be placed on the precast members. In no case shall loads be placed on the precast members prior to the welding operations associated with erection, and prior to placing of topping (if required).

I. No Contractor, Subcontractor or any of his employees shall arbitrarily cut, drill, punch or otherwise tamper with the precast members.

J. Precast members damaged while being erected will be rejected or shall be repaired in a manner approved by the Engineer.

[END OF SECTION]

SECTION 07900

JOINT FILLERS, SEALANTS AND CAULKING

PART 1 – GENERAL

1.01 THE REQUIREMENT

A. Furnish labor, materials, equipment and appliances required for the complete execution of Work shown on the Drawings and specified herein.

1.02 REFERENCE SPECIFICATIONS, CODES AND STANDARDS

A. Without limiting the generality of the other requirements of the specifications, all work herein shall conform to the applicable requirements of the following documents. All referenced specifications, codes, and standards refer to the most current issue available at the time of Bid.

1. ASTM C-920 – Elastomeric Joint Sealants

2. ASTM D-1056 – Flexible Cellular Materials – Sponge or Expanded Rubber

3. SWRI – Sealant and Caulking Guide Specification

1.03 SUBMITTALS

A. In accordance with the procedures and requirements set forth in the Contract Documents, submit the following:

1. Manufacturers literature and installation instructions. Label each product submitted with Type as indicated in paragraph 2.01 A.

2. Color samples of each type of sealant.

1.04 QUALITY ASSURANCE

A. Applicator shall be a company specializing in the installation of sealants with a minimum of five years of experience.

1.05 DELIVERY, STORAGE AND HANDLING

A. Deliver materials in unopened labeled packages.

B. Store materials in location protected from freezing or damages.

C. Reject and remove from the site materials within broken or damaged packaging.

PART 2 – PRODUCTS

2.01 MATERIALS

A. Sealants

1. Type 1: Multi-component, non-sag, low-modulus polyurethane rubber sealant meeting ASTM C-920, Type M, Grade NS, Class 25, use NT, M, A, and O. Capable of withstanding 50% in extension or compression such as Sikaflex-2C NS/SL, Sika Corporation, or Sonolastic NP-2, Sonneborn, or DynaTrol II by Pecora Corporation.

2. Type 2: Single component polyurethane sealant meeting ASTM C-920, Type S, Grade NS, Class 25, Use NT, M, A, and O. Capable of withstanding 25% in extension or compression such as Sikaflex 1A by Sika Corporation, DynaTrol 1-XL by Pecora Corporation, or Sonolastic NP-1 by Master Builders Solutions.

3. Type 3: Single component, low-modulus moisture curing silicone meeting ASTM C-920, Type S, Grade NS, Class 25, Use NT, M, G, and A. Capable of withstanding 50% extension and compression. Pecora 890 by Pecora Corporation, Sonolastic Omni Seal by Master Builders Solutions.

4. Type 4: Single component, mildew resistant, moisture-curing silicone meeting ASTM C-920, Type S, Grade NS, Class 25, Use NT, M, G, and A. Pecora 898 by Pecora Corporation, Sonolastic Omni Plus by Master Builders Solutions.

5. Type 5: Single component, acrylic latex meeting ASTM C-834. AC-20+ Silicone by Pecora Corporation, Sonneborn Sonolac by Master Builders Solutions.

6. Type 6: High grade butyl sealant meeting Federal Specification TT-S-00-1657. BC-158 by Pecora Corporation or equal.

7. Type 7: Multi-component chemical resistant polysulfide sealant conforming to ASTM C-920, Type M, Grade NS, Class 25 such as Deck-O-Seal by W.R. Meadows, Tammsflex by DuraJoint Concrete Accessories, or Synthacalk GC2+ by Pecora Corporation.

8. Type 8: Nonsag, Multi Component, traffic grade polyurethane sealant meeting ASTM C920, Type 19, Grade NS, Class 25, use T, M, A, and O. DynaTread by Pecora Corporation, Sonolastic Ultra by Master Builders Solutions.

B. Primer: Non-staining primer recommended by sealant manufacturer for the substrates on this project.

C. Backer Rod: Closed cell foam, nonreactive with caulking materials, non-oily, and approved by the sealant manufacturer. Minimum density shall be 2.00 pounds per cubic foot. Use no asphalt or bitumen-impregnated fiber with sealants.

D. Joint Cleaner: Recommended by sealant or caulking compound manufacturer.

E. Bond breaker: Either polyethylene film or plastic tape as recommended by the sealant manufacturer.

F. Color: Where manufacturer's standard colors do not closely match materials being sealed, provide a custom color.

PART 3 – EXECUTION

3.01 QUALITY CONTROL

A. Coordinate work with details shown on approved shop drawings prepared by other trades.

B. Verify conditions in the field.

C. Schedule work to follow closely the installation of other trades.

D. Apply sealants and related items in temperatures and dry conditions recommended by the manufacturers.

E. Do not paint sealant, unless recommended by sealant and paint manufacturer.

3.02 PREPARATION

A. Protect finished surfaces adjoining by using masking tape or other suitable materials.

B. Clean and prime joints before starting any caulking or sealing work.

C. Thoroughly clean joints and spaces of mortar and other foreign materials. Cleaning agent shall be Xylol or similar non-contaminating solvent to remove any film from metal surfaces. Masonry or concrete surfaces shall be brushed or air jet cleaned.

D. Joint Requirements

1. All joints and spaces to be sealed in exterior work shall be less than ½-inch deep and not less than 1/4 inch wide. If joints in masonry are less than that specified herein, the mortar shall be cut out to the required width and depth. All joints and spaces to receive sealant shall be completely prepared and thoroughly dry before installation of sealant.

2. Unless otherwise specified, joints and spaces which are open to a depth of 1/2 inch or greater shall be solidly filled with back-up material to within 1/4 inch of the surface. Back-up material shall be packed tightly and made continuous throughout the length of the joints. Bond breaker shall be applied as required. If joints are less than ¼-inch deep, the back-up material may be omitted, a bond breaker

substituted and the joint completely filled with sealant. The back-up material shall not project beyond the ¼-inch depth of the open space in any joint. The following width-to-depth ratio table shall be adhered to, unless otherwise recommended by manufacturer.

	Sealant Depth	
Joint Width	**Minimum**	**Maximum**
¼ inch	1/4 inch	1/4 inch
Over 1/4 inch to 1/2 inch	1/4 inch	Equal to width
Over 1/2 inch to 1 inch	1/2 inch	Equal to width
Over 1 inch to 2 inches	1/2 inch	1/2 of width

3.03 APPLICATION

A. Exercise care before, during, and after installation so as not to damage any material by tearing or puncturing. All finished work shall be approved before covering with any other material or construction.

B. Apply sealant by an approved type of gun except where the use of a gun is not practicable, suitable hand tools shall be used. Avoid applying the compound to any surface outside of the joints or spaces to be sealed. Mask areas where required to prevent overlapping of sealant.

C. All joints shall be waterproof and weathertight.

D. Point sealed joints to make a slightly concave joint, the edges of which are flush with the surrounding surfaces. Exposed joints in the interior side of the door and other frames shall be neatly pointed flush or to match adjacent jointing work.

E. Adjacent materials which have been soiled shall be cleaned immediately and the work left in neat and clean condition.

F. Comply with sealant manufacturer's written instructions except where more stringent requirements are shown or specified and except where manufacturer's technical representative directs otherwise.

3.04 ADJUSTMENT AND CLEANING

A. Remove misplaced sealant compounds promptly using methods and materials recommended by the manufacturer, as the work progresses.

B. Allow sealants to cure and remove protective edging, of doors, louvers, saddles windows etc. as directed by the Engineer.

3.05 SCHEDULE

Schedule of Sealants

Application	Sealant	Color
Vertical and horizontal expansion and construction joints in concrete structures unless noted otherwise herein or on Drawings.	Type 1	To closely match adjacent surfaces or mortar and as selected by the Owner.
Vertical and horizontal joints bordered on both sides by masonry, precast concrete, natural stone or other porous building material, unless noted otherwise herein or on Drawings.	Type 2	To closely match adjacent surfaces or mortar and as selected by the Owner.
Vertical and horizontal joints bordered on both sides by painted metals, anodized aluminum, mill finished aluminum, PVC, glass or other non-porous building material.	Type 3	To closely match adjacent surfaces and as selected by the Owner.
Masonry expansion and control joints less than 1¼" wide.	Type 2	To closely match adjacent surfaces and as selected by the Owner.
Masonry expansion and control joints equal or greater than 1¼ inches wide and not to exceed 2".	Type 1	To closely match adjacent surfaces and as selected by the Owner.
Interior – wood trim and finish joints.	Type 5	Color to be selected by Owner
Sanitary areas, joints in ceramic tile, around plumbing fixtures, countertops, and back splashes.[1]	Type 4	To closely match adjacent surfaces and as selected by the Owner.
Perimeter sealing of doors, windows, louvers, piping, ducts, and electrical conduit.[2]	Type 2 or Type 3	To closely match adjacent surfaces and as selected by the Owner.
Below thresholds.	Type 6	Manufacturer's standard
Submerged in liquids.[4]	Type 1	Manufacturer's standard
Submerged in liquids with high concentration of chlorine (> 2 ppm) or wastewater.	Type 7	Manufacturer's standard
Horizontal Joints exposed to vehicular or pedestrian traffic.	Type 8	To closely match adjacent surfaces.
Other joints indicated on the drawings or customarily sealed but not listed.	Type recommended by manufacturer	To closely match adjacent surfaces and as selected by the Owner.

[1] Sealant for Laboratory Countertop shall be as recommended by countertop manufacturer.
[2] Provide UL approved sealants for penetrations thru fire-rated walls.
[3] Sealants which will come in contact with potable water shall meet the requirements of NSF 61.
[4] Where sealant will be immersed in liquid chemicals verify compatibility prior to installation of sealant.

[END OF SECTION]

SECTION 09900

PAINTING

PART 1 – GENERAL

1.01 THE REQUIREMENT

A. Furnish labor, materials, equipment and appliances required for complete execution of Work shown on Drawings and Specified herein.

B. Section Includes:

1. Paint Materials
2. Shop Painting
3. Field Painting
    a. Surface Preparation
    b. Piping and Equipment Identification
    c. Schedule of Colors
    d. Work in Confined Spaces
    e. OSHA Safety Colors

1.02 RELATED SECTIONS

A. Section 07900 – Joint Fillers, Sealants, and Caulking

B. Section 15030 – Piping and Equipment Identification Systems

1.03 REFERENCE SPECIFICATIONS, CODES AND STANDARDS

A. Without limiting the generality of these specifications, the Work shall conform to the applicable requirements of the following documents:

1. SSPC – The Society for Protective Coatings Standards
    a. SSPC-Vis 1 – Pictorial Surface Preparation Standards for Painting Steel Structures
    b. SSPC-SP2 – Hand Tool Cleaning
    c. SSPC-SP3 – Power Tool Cleaning

d. SSPC-SP5/NACE 1 – White Metal Blast Cleaning

e. SSPC-SP6/NACE 3 – Commercial Blast Cleaning

f. SSPC-SP7/NACE 4 – Brush-off Blast Cleaning

g. SSPC-SP10/NACE 2 – Near-White Metal Blast

h. SSPC-SP11 – Power Tool Cleaning to Bare Metal

i. SSPC-SP13/NACE6 – Surface Preparation of Concrete

2. ICRI – International Concrete Repair Institute

3. NACE – National Association of Corrosion Engineers

4. NAFP – The National Association of Pipe Fabricators

5. ASTM D1737 – Test Method for Elongation of Attached Organic Coatings with Cylindrical Mandrel Apparatus

6. ASTM B117 – Method of Salt Spray (Fog) Testing

7. ASTM D4060 – Test Method for Abrasion Resistance of Organic Coating by the Taber Abraser

8. ASTM D3359 – Method for Measuring Adhesion by Tape Test

1.04 SUBMITTALS

A. In accordance with the procedures and requirements set forth in the Contract Documents, submit the following:

1. Manufacturer's literature and Material Safety Data Sheets for each product.

2. Samples of each finish and color. Submitted samples of each finish and color shall be prepared in a step-down format so that the area of each sample indicates the appearance of the various coats. For example, where a three-coat system is specified, the sample shall be divided into three areas indicating one coat only, two coats and all three coats. The Engineer will provide written authorization constituting a standard, as to color and finish only, for each coating system

3. Painting schedule identifying surface preparation and paint systems proposed. Cross reference with Tables 1 and 2. Provide the name of the paint manufacturer, and name, address, and telephone number of manufacturer's representative who will inspect the work. Submit schedule for approval as soon as possible following the Award of Contract, so approved schedule may be used to identify colors and

specify shop paint systems for fabricated items. Manufacturer shall substitute paint system with equal performance where required for VOC compliance.

4. Contractor shall submit Q.C. Inspection plan describing all tests and inspections task to be performed. Include copy of daily log showing environmental conditions measurements and frequency. Copy of completed log shall be provided at completion of work.

5. Name and detailed qualifications of the protective coating applicator or subcontractor. Qualifications shall include, but not be limited to, five (5) project references which show that the painting applicator or subcontractor has previous successful experience with the specified or comparable coating systems, a list of installations that are currently in service and documentation that applicator or subcontractor is currently a qualified applicator of the proposed coatings by the manufacturer. Include the name, address and telephone number of the owner of each installation for which the coating applicator provided the coating.

6. Certifications: The coating manufacturer shall submit the following certifications:

   a. A letter from the coating manufacturer stating that the specified material is suitable for the application.

   b. Inspection reports of coating manufacturer certifying that all inspections by the manufacturer showed satisfactory performance of the work by the coating applicator.

   c. A letter from the coating manufacturer certifying that the surface preparation has been properly completed.

   d. A letter from the coating manufacturer certifying that the coating system has been properly applied and acknowledging that their warranty is in effect.

   e. A sample copy of the warranty to be issued after completion of the work.

7. Test reports of all testing and inspections during the work.

1.05 SYSTEM DESCRIPTION

A. Work shall include surface preparation, paint application, inspection of painted surfaces and corrective action required, protection of adjacent surfaces, cleanup and appurtenant work required for the proper painting of all surfaces to be painted. Surfaces to be painted are designated within the Painting Schedule and may include new and existing piping, miscellaneous metals, equipment, buildings, exterior fiberglass, exposed electrical conduit and appurtenances.

B. Perform Work in strict accordance with manufacturer's published recommendations and instructions, unless the Engineer stipulates that deviations will be for the benefit of the project.

C. Paint surfaces which are customarily painted, whether indicated to be painted or not, with painting system applied to similar surfaces, areas and environments, and as approved by Engineer.

D. Piping and equipment shall receive color coding and identification. Equipment shall be the same color as the piping system.

1.06 QUALITY ASSURANCE

A. The Applicator must have a minimum NACE Level 1 certified inspector on staff.

B. Painting operations shall be accomplished by skilled craftsman and licensed by the state/commonwealth to perform painting work.

C. Provide a letter indicating that the painting applicator has five years of experience, and 5 references which show previously successful application of the specified or comparable painting systems. Include the name, address, and the telephone number for the Owner of each installation for which the painting applicator provided services.

D. Contractor shall coordinate Q.C. Inspections.

E. Notify Owner and Engineer at completion of surface preparation, priming application and final cure to allow inspection by Owner and Engineer or their Third-Party Inspector.

1.07 STORAGE AND DELIVERY

A. Bring materials to the job site in the original sealed and labeled containers.

B. Container label to include manufacturer's name, type of paint, brand name, lot number, brand code, coverage, surface preparation, drying time, cleanup requirements, color designation, and instructions for mixing and reducing.

C. Store paint materials at minimum ambient temperature of 45 degrees F (7 degrees C) and a maximum of 90 degrees F (32 degrees C), in ventilated area, and as required by manufacturer's instructions.

1.08 SAFETY AND HEALTH REQUIREMENTS

A. Require that personnel perform work in strict accordance with the latest requirements of OSHA Safety and Health Standards for construction. Meet or exceed requirements of regulatory agencies having jurisdiction and the manufacturer's published instructions and recommendations. Maintain a copy of all Material Safety Data Sheets at the job site of each product being used prior to commencement of work. Provide and require that personnel use protective and safety equipment in or about the project site. Provide respiratory devices, eye and face protection, ventilation, ear protection, illumination and other safety devices required to provide a safe work environment.

B. Respirators shall be worn by persons engaged or assisting in spray painting. The Contractor shall provide ventilating equipment and all necessary safety equipment for the protection of the workmen and the work.

C. All paint shall comply with all requirements of the Air Pollution Regulatory Acts concerning the application and formulation of paints and coatings for an area in which the paints are applied. Specifically, paints shall be reformulated as required to meet the local, State and Federal requirements.

1.09 SERVICES OF MANUFACTURER'S REPRESENTATIVE

A. The Contractor shall purchase paint from an acceptable manufacturer. The manufacturer shall assign a representative to inspect the application of his product both in the shop and field. The Contractor, through the manufacturer's representative, shall submit his report to the Engineer at the completion of his Work identifying the products used and verifying that said products were properly applied and that the paint systems were proper for the exposure and service.

B. Services shall also include, but not be limited to, inspecting prior coatings of paint, determination of best means of surface preparation, inspection of complete work, and re-inspection of painted work to be performed six months after the job is completed.

1.10 MANUFACTURER'S INSTRUCTIONS

A. The manufacturer's published instructions for use as a guide in specifying and applying the manufacturers proposed paint shall be submitted to the Engineer. Paint shall not be delivered to the job before acceptance of the manufacturer's instructions is given by the Engineer.

B. A manufacturer's paint will not be considered for use unless that manufacturer's published instructions meets the following requirements:

C. The instructions must have been written and published by the manufacturer for the purpose and with the intent of giving complete instruction for the use and application of the proposed paint in the locality and for the conditions for which the paint is specified or shown to be applied under this Contract.

D. All limitations, precautions, and requirements that may adversely affect the paint; that may cause unsatisfactory results after the painting application; or that may cause the paint not to serve the purpose for which it was intended; that is, to protect the covered material from corrosion, shall be clearly and completely stated in the instructions. These limitations and requirements shall, if they exist, include, but not be limited to the following:

1. Methods of application

2. Number of coats

3. Thickness of each coat

4. Total thickness

5. Drying time of each coat, including primer

6. Primer required to be used

7. Primers not permitted

8. Use of a primer

9. Thinner and use of thinner

10. Temperature and relative humidity limitations during application and after application

11. Time allowed between coats

12. Protection from sun

13. Physical properties of paint including solids content and ingredient analysis

14. Surface preparation

15. Touch up requirements and limitations

E. Concrete surfaces specified by the paint manufacturer to be acid etched shall be etched in accordance with the manufacturer's instructions. The surface shall then be thoroughly scrubbed with clean water, rinsed, and allowed to dry. The surface shall be tested with a moisture meter to determine when dry before coating. The surface shall also be tested for pH to determine the acid has been properly neutralized.

1.11 SURFACES NOT TO BE COATED

A. The following items shall not be coated unless otherwise noted:

1. Encased piping or conduit.

2. Stainless steel work.

3. Clear PVC secondary containment piping.

4. Galvanized checkered plate.

5. Aluminum handrails, walkways, windows, louvers, grating and checkered plate.

6. Flexible couplings, lubricated bearing surfaces and insulation.

7. Packing glands and other adjustable parts of mechanical equipment.

8. Finish hardware.

9. Steel encased in concrete or masonry

10. Plastic switch plates and receptacle plates.

11. Signs and nameplates.

12. Any code-required labels, such as Underwriters' Laboratories and Factory Mutual, or any equipment identification, performance rating, name or nomenclature plates.

13. Any moving parts of operating units, mechanical and electrical parts, such as valve and damper operators, linkages, sensing devices, motor and fan shafts, unless otherwise indicated

1.12 QUALITY WORKMANSHIP

A. The Contractor shall be responsible for the cleanliness of his painting operations and shall use covers and masking tape to protect work whenever such covering is necessary, or if so requested by the Owner. Any unwanted paint shall be carefully removed without damage to any finished paint or surface. If damage occurs, the entire surface, adjacent to and including the damaged area, shall be repainted without visible lapmarks and without additional cost to the Owner.

B. Painting found defective shall be scraped or sandblasted off and repainted as the Owner may direct. Before final acceptance of the work, damaged surfaces of paint shall be cleaned and repainted as directed by the Owner.

1.13 ADDITIONAL PAINT

A. At the end of the project, the Contractor shall turn over to the Owner a one gallon can (single component material) or small kit (multi component material – minimum of one gallon yield) of each type and color of paint, primer, thinner or other coating used in the field painting. The material shall be delivered in unopened, labeled cans as it comes from the factory. The manufacturer's literature describing the materials and giving directions for their use shall be furnished in three bound copies. A type-written inventory list shall be furnished at the time of delivery.

1.14 WARRANTY

A. The coating manufacturer shall provide a standard material product warranty for a period of 5 years from the date of Substantial Completion.

PART 2 – MATERIALS

2.01 GENERAL INFORMATION

A. The term "paint" is defined as both paints and coatings including emulsions, enamels, stains, varnishes, sealers, and other coatings whether organic or inorganic and whether used as prime, intermediate, or finish coats.

B. Purchase paint from an approved manufacturer. Manufacturer shall assign a representative to inspect application of their product both in the shop and field. The manufacturer's representative shall submit a report to the Engineer at the completion the Work identifying products used and verifying that surfaces were properly prepared, products were properly applied, and the paint systems were proper for the exposure and service.

C. Provide primers and intermediate coats produced by same manufacturer as finish coat. Use only thinners approved by paint manufacturer, and only within manufacturer's recommended limits.

D. Ensure compatibility of total paint system for each substrate. Test shop primed equipment delivered to the site for compatibility with final paint system. Provide an acceptable barrier coat or totally remove shop applied paint system when incompatible with system specified, and repaint with specified paint system.

E. Use painting materials suitable for the intended use and recommended by paint manufacturer for the intended use.

F. Require that personnel perform work in strict accordance with the latest requirements of OSHA Safety and Health Standards for construction. Meet or exceed requirements of regulatory agencies having jurisdiction and the manufacturer's published instructions and recommendations. Maintain a copy of all Material Safety Data Sheets at the job site of each product being used prior to commencement of work. Provide and require that personnel use protective and safety equipment in or about the project site. Provide respiratory devices, eye and face protection, ventilation, ear protection, illumination and other safety devices required to provide a safe work environment.

G. All building, facilities, structures, and appurtenances, as indicated on the Drawings and as specified herein, shall be painted with not less than one shop coat and two field coats, or one prime coat and two finish coats of the appropriate paint. Items to be painted include, but are not limited to, exterior and interior concrete, structural steel, miscellaneous metals, steel and aluminum doors and frames, concrete block, ductwork, sluice gates, operators, pipe fittings, valves, mechanical equipment, motors, conduit, and all other work which is obviously required to be painted unless otherwise specified.

H. Baked-on enamel finishes and items with standard shop finishes such as graphic panels, electrical equipment, toilet partitions, lockers, instrumentation, etc., shall not be field painted unless the finish is damaged during shipment or installation. Aluminum,

stainless steel, fiberglass and bronze work shall not be painted unless color coding and marking is required or otherwise specified.

2.02 ACCEPTABLE MANUFACTURERS

A. Subject to compliance with the Specifications, provide products from one of the following manufacturers:

1. Tnemec Company Inc.

2. CARBOLINE.

3. Sherwin-Williams.

4. Or approved equal.

PART 3 – EXECUTION

3.01 SHOP PAINTING

A. Shop prime fabricated steel and equipment with at least one shop coat of prime paint compatible with finish paint system specified. Prepare surface to be shop painted in strict accordance with paint manufacturer's recommendations and as specified. Finish coats may be shop applied, if approved by the Engineer. Package, store and protect shop painted items until they are incorporated into Work. Repair painted surfaces damaged during handling, transporting, storage, or installation to provide a painting system equal to the original painting received at the shop.

B. Identify surface preparation and shop paints on Shop Drawings. Verify compatibility with field applied paints.

C. Coordinate shop painting and field coating to ensure item is delivered and field coating occurs within recoat window of shop painted system requirements.

D. Shop finish coats may be the standard finish as ordinarily applied by the manufacturer if it can be demonstrated to the Engineer that the paint system is equal to and compatible with the paint system specified. However, all pumps, motors and other equipment shall receive at least one field applied finish coat after installation.

3.02 SURFACE PREPARATION

A. General

1. Surfaces to be painted shall be clean and dry, and free of dust, rust, scale, and foreign matter. No solvent cleaning, power or hand tool cleaning shall be permitted unless approved by the Engineer.

2. Protect or remove, during painting operations, hardware, accessories, machined surfaces, nameplates, lighting fixtures, and similar items not intended to be painted prior to cleaning and painting. Reposition items removed upon completion of painting operations.

3. Examine surfaces to be coated to determine that surfaces are suitable for specified surface preparation and painting. Report to Engineer surfaces found to be unsuitable in writing. Do not start surface preparation until unsuitable surfaces have been corrected. Starting surface preparation precludes subsequent claim that such surfaces were unsuitable for the specified surface preparation or painting.

4. Surface preparation shall be in accordance with specifications and manufacturer's recommendations. Provide additional surface preparation, and fill coats where manufacturer recommends additional surface preparation, in addition to requirements of specification.

5. Touch-up shop or field applied coatings damaged by surface preparation or any other activity, with the same shop or field applied coating; even to the extent of applying an entire coat when required to correct damage prior to application of the next coating. Touchup coats are in addition to the specified applied systems, and not considered a field coat.

6. Protect motors and other equipment during blasting operation to ensure blasting material is not blown into motors or other equipment. Inspect motors and other equipment after blasting operations and certify that no damage occurred, or where damage occurred, the proper remedial action was taken.

7. Field paint shop painted equipment in compliance with Color Coding and as approved by Engineer.

B. Metal Surface Preparation

1. Prepare all welds to a minimum NACE weld preparation level “C” per NACE Standard SP0178. Provide additional weld preparation where required by the coating manufacturer. Contractor shall provide NACE SP0178 weld mold visual aids on site for evaluation of all weld preparation.

2. Conform to current The Society for Protective Coatings Standards (SSPC) Specifications for metal surface preparation. Use SSPC-Vis-1 pictorial standards or NACE visual standards TM-01-70 or TM-01-75 to determine cleanliness of abrasive blast cleaned steel.

3. Perform blast cleaning operations for metal when following conditions exist:

   a. Moisture is not present on the surface.

b. Ambient and surface temperatures are 5°F or greater than the dew point temperature.

c. Painting or drying of paint is not being performed in the area.

d. Equipment is in good operating condition.

e. Proper ventilation, illumination, and other safety procedures and equipment are being provided and followed.

4. Abrasive blast ferrous metals to be shop primed, or component mechanical equipment in accordance with SSPC-SP10, Near-White Metal Blast.

5. Abrasive blast field prepared ferrous metals in accordance with SSPC-SP10, Near White Metal Blast, where metal is to be submerged, in a corrosive environment, or in severe service. Provide a 3.0 mil minimum angular anchor profile unless recommended otherwise by the coating manufacturer in writing.

6. Abrasive blast field prepared ferrous metals in accordance with SSPC-SP6 Commercial Blast, where metal is to be used in mild or moderate service, or non-corrosive environment or weathering exposure. Provide a 1.5 mil minimum angular anchor profile unless recommended otherwise by the coating manufacturer in writing.

7. Clean nonferrous metals, copper, or galvanized metal surfaces in accordance to SSPC-SP1, Solvent Cleaning, or give one coat of metal passivator or metal conditioner compatible with the complete paint system. Galvanized metal shall be prepared in accordance with SSPC SP-16. Abrasive blast clean to increase mechanical adhesion in accordance with ASTM D6386, Standard Practice for Preparation of Zinc (Hot-Dip Galvanized) Coated Iron and Steel Product and Hardware Surfaces for Painting when required by coating manufacturer. Provide a 1.5 mil minimum angular anchor profile unless recommended otherwise by the coating manufacturer in writing. All nonferrous metals are to be coated as soon as possible on the same day of surface preparation.

8. Abrasive blast clean internal and external ductile iron pipe surfaces prior to coating in accordance with NAPF 500-03-04, Surface Preparations Standard for Abrasive Blast Cleaning of Ductile Iron Pipe. Abrasive blast clean internal and external cast ductile iron and cast-iron fitting surfaces in accordance with NAPF-03-05.

9. Prime cleaned metals immediately after cleaning to prevent rusting.

10. Clean rusted metals down to bright metal by abrasive blasting and immediately field primed.

C. Concrete Surface Preparation

1. Cure concrete a minimum of 28 days at 75° F before surface preparation, and painting begins. Allow more time at lower temperatures if specified by paint manufacturer.

2. Test concrete for pH and salts using test methods recommended by the paint manufacturer. A minimum of one test per 1000 square feet of area to be coated shall be performed unless approved otherwise by Engineer. All concrete that was previously exposed to acidic environments must be confirmed to have a minimum pH of 9. Do not begin painting until acceptable to manufacturer and Engineer.

3. Floor Coatings: Moisture content of concrete and masonry surfaces shall conform to manufacturer's recommended limits, and as listed in SSPC-SP13/NACE 6 Section 6 Acceptance Criteria Table 1. Floor surfaces to be coated shall be tested in accordance with ASTM F1869 – Standard Test Method for Measuring Moisture Vapor Emission Rate of Concrete Subfloor Using Anhydrous Calcium Chloride or as required by the coating manufacturer. For epoxy coating systems, moisture vapor transmission shall not exceed ten pounds per 1,000 square feet in a 24-hour period or less if specified by Coating Manufacturer. Vertical and horizontal floor surfaces shall be tested in accordance with ASTM F2170 – Standard Test Method for Determining Relative Humidity in Concrete using in situ Probes (relative humidity shall not exceed 80% or as required by the coating manufacturer) or with ASTM D4263 – Standard Test Method for Indicating Moisture in Concrete by the Plastic Sheet Test Method (test results shall be no moisture present). Engineer or Coating Manufacturer Representative shall specify all test locations. A minimum of one test per 1000 square feet of area to be coated shall be performed unless approved otherwise by Engineer.

4. Prepare concrete surfaces to receive coatings in accordance with NACE 6/SSPC-13 – Joint Surface Preparation Standards and ICRI Technical Guidelines. Remove contaminants, open bugholes, surface voids, air pockets, and other subsurface irregularities using abrasive blasting, shot blasting, water jetting or mechanical abrading. Use dry, oil-free air for blasting operations. Surface texture after blasting shall achieve profile as required by manufacturer or where not defined by manufacturer, profile shall be a minimum ICRI-CSP 5 surface profile. Remove residual abrasives, dust, and loose particles by vacuuming or other approved method.

5. Surface defects, such as hollow areas, bugholes, honeycombs, and voids shall be filled with polymeric or waterborne epoxy cementitious filler compatible with painting system. Complete fill coats may be used in addition to specified painting system and as approved by the Engineer. Fins, form marks, and all protrusions or rough edges shall be removed.

6. Repair existing concrete surfaces which are deteriorated to the point that surface preparation exposes aggregate with fill coats or patching mortar as recommended by paint manufacturer and as directed by the Engineer.

7. Clean concrete of all dust, form oils, curing compounds, oil, tar, laitance, efflorescence, loose mortar, and other foreign materials before paints are applied.

8. To ease coating around outside corners, provide ¾-inch chamfered edges on all new concrete outside corners and grind existing concrete outside corners to a minimum radius of ¾-inch.

9. Unless recommended otherwise by the coating manufacturer, provide ¼" deep by ¼" wide tool cut terminations at 1-inch maximum from all coating edges for anchorage. Provide terminations around all equipment, piping, openings, gates, top and bottom of walls, stop locations of each day's work and overlap onto previously completed work. Transition coating 3-inches onto interior lining of piping except where coating compatibility concerns are noted by coating manufacturer.

10. Apply epoxy or polymeric filler compatible with painting system to all inside corners of areas to be coated with a margin trowel to form a continuous 45-degree cant cove across corners with a minimum dimension of 1.5-inch. Roughen or prepare cured filler as recommended by coating manufacturer for proper coating adhesion.

11. All equipment grouting shall be installed and cured prior to starting coating work. Coating shall be applied over grout up to the edges of all equipment, gates and uninterrupted piping unless specifically noted otherwise.

D. Wood

1. Clean wood surfaces free of all foreign matter, with cracks and nail holes and other defects properly filled and smoothed. Remove sap and resin by scraping and wipe clean with rags dampened with mineral spirits.

2. Saturate end grain, cut wood, knots, and pitch pockets with an appropriate sealer before priming.

3. Prime and backprime wood trim before setting in place.

4. After prime coat has dried, fill nailholes, cracks, open joints, and other small holes with approved spackling putty. Lightly sand wood trim prior to applying second coat of paint.

E. Castings

1. Prepare castings for painting by applying a brush or a knife-applied filler. Fillers are not to be used to conceal cracks, gasholes, or excessive porosity.

2. Apply one coat of primer with a minimum thickness of 1.2 mils in addition to coats specified. Allow sufficient drying time before further handling.

F. Exposed Pipe, Valves and Pumps

1. Bituminous coated pipe shall not be used in exposed locations. Pipe which shall be exposed after project completion shall be primed in accordance with the requirements herein. Any bituminous coated ferrous pipe which is inadvertently installed in exposed locations shall be sandblasted to SSPC-SP-10 Near-white Metal before priming and painting.

2. After installation and prior to finish painting, all exterior, exposed flanged joints shall have the gap between adjoining flanges and gaps between the pipe wall and threaded-on flanges sealed with a single component Thiokol caulking to prevent rust stains.

G. Masonry

1. Cure for a minimum of 30 days prior to paint application.

2. Clean masonry surfaces free from all dust, dirt, oil, grease, loose mortar, chalky deposits, efflorescence, and other foreign materials.

3. Test masonry for moisture content. Use test method recommended by paint manufacturer. Do not begin painting until moisture content is acceptable to manufacturer.

H. Gypsum Drywall

1. Sand joint compound with sandpaper to provide a smooth flat surface. Avoid sanding of adjacent drywall paper.

2. Remove dust, dirt, and other contaminants.

I. PVC Pipe Surfaces

1. All pipe surfaces shall be cleaned and lightly sanded before painting.

J. Previously-Painted Surfaces

1. Totally remove existing paint when: surface is to be submerged in a severe environment, paint is less than 75% intact, brittle, eroded or has underfilm rusting.

2. Surfaces which are greater than 75% intact require removal of failed paints and then spot primed. Spot priming is in addition to coats specified.

3. Remove surface contamination such as oil, grease, loose paint, mill scale, dirt, foreign matter, rust, mold, mildew, mortar, efflorescence, and sealers.

4. Clean and dull glossy surfaces prior to painting in accordance with the manufacturer's recommendations.

5. Check existing paints for compatibility with new paint system. If incompatible, totally remove existing paint system or apply a barrier coat recommended by the paint manufacturer. Remove existing paints of undetermined origin. Prepare a test patch of approximately 3 square feet over existing paint. Allow test patch to dry thoroughly and test for adhesion. If proper adhesion is not achieved remove existing paint and repaint.

3.03 APPLICATION OF PAINT

A. Apply paint by experienced painters with brushes or other applicators approved by the Engineer, and paint manufacturer.

B. Apply paint without runs, sags, thin spots, or unacceptable marks.

C. Apply at rate specified by the manufacturer to achieve at least the minimum dry mil thickness specified. Apply additional coats, if necessary, to obtain thickness.

D. Special attention shall be given to nuts, bolts, edges, angles, flanges, welds, etc., where insufficient film thicknesses are likely. Stripe paint outside corners and edges in accordance with SSPC PA Guide 11. Stripe painting shall be in addition to coats specified.

E. Perform thinning in strict accordance with the manufacturer's instructions, and with the full knowledge and approval of the Engineer and paint manufacturer.

F. Allow paint to dry a minimum of twenty-four hours between application of any two coats of paint on a particular surface, unless shorter time periods are a requirement by the manufacturer. Longer drying times may be required for abnormal conditions as defined by the Engineer and paint manufacturer. Do not exceed manufacturer's recommended drying time between coats.

G. Suspend painting when any of the following conditions exist:

1. Rainy or excessively damp weather.

2. General air temperature cannot be maintained at 50°F or above through the drying period, except on approval by the Engineer and paint manufacturer.

3. Unsuitable environmental conditions are expected within 1 hour of the listed “Dry to Touch” time for the coating.

4. Surface temperature of item is within 5 degrees of dewpoint.

5. Dew or moisture condensation are anticipated.

6. Surface temperature exceeds the manufacturer's recommendations.

H. Where application of coating across concrete control joints or expansion joints has the potential to crack, turn coating into joints and caulk joints with a sealant compatible with coating rated for the intended service per Section 07900 – Joint Fillers, Sealants, Caulking.

I. All surfaces which are to be installed against concrete, masonry etc., and will not be accessible for field priming and/or painting shall be back primed and painted as specified herein, before erection. Anchor bolts shall be painted before the erection of equipment and then the accessible surfaces repainted when the equipment is painted.

J. Painting found defective shall be scraped or sandblasted off and repainted as the Engineer may direct. Before final acceptance of the Work, damaged surfaces of paint shall be cleaned and repainted as directed by the Engineer.

3.04 INSPECTION

A. Each field coat of paint will be inspected and approved by the Engineer or his authorized representative before succeeding coat is applied. Tint successive coats so that no two coats for a given surface are exactly the same color. Tick-mark surfaces to receive black paint in white between coats.

B. Use magnetic dry film thickness gauges and wet fiber thickness gauges for quality control. Furnish magnetic dry film thickness gauge for use by the Engineer.

C. Coatings shall pass a holiday detector test.

D. Determination of Film Thickness: Randomly selected areas, each of at least 107.5 contiguous square feet, totaling at least 5% of the entire control area shall be tested. Within this area, at least 5 squares, each of 7.75 square inches, shall be randomly selected. Three readings shall be taken in each square, from which the mean film thickness shall be calculated. No more than 20 percent of the mean film thickness measurements shall be below the specified thickness. No single measurement shall be below 80 percent of the specified film thickness. Total dry film thickness greater than twice the specified film thickness shall not be acceptable. Areas where the measured dry film thickness exceeds twice that specified shall be completely redone unless otherwise approved by the Engineer. When measured dry film thickness is less than that specified additional coats shall be applied as required.

E. Holiday Testing: Holiday test painted ferrous metal surfaces which will be submerged in water or other liquids, or surfaces which are enclosed in a vapor space in such structures. Holiday testing shall be in accordance with (NACE SP 0188). Mark areas which contain holidays. Repair or repaint in accordance with paint manufacturer's printed instructions and retest.

1. Dry Film Thickness Exceeding 20 Mils: For surfaces having a total dry film thickness exceeding 20 mils: Pulse-type holiday detector such as Tinker & Rasor Model AP-W, D.E. Stearns Co. Model 14/20, shall be used. The unit shall be

adjusted to operate at the voltage required to cause a spark jump across an air gap equal to twice the specified coating thickness.

2. Dry Film Thickness of 20 Mils or Less: For surfaces having a total dry film thickness of 20 mils or less: Tinker & Rasor Model M1 non-destructive type holiday detector, K-D Bird Dog, shall be used. The unit shall operate at less than 75-volts. For thicknesses between 10 and 20 mils, a non-sudsing type wetting agent, such as Kodak Photo-Flow, shall be added to the water prior to wetting the detector sponge.

F. Paint manufacturer's NACE certified representative shall provide their services as required by the Engineer. Services shall include, but not be limited to, inspecting existing paint, determination of best means of surface preparation, inspection of completed work, and final inspection of painted work 11 months after the job is completed.

3.05 PROTECTION OF ADJACENT PAINT AND FINISHED SURFACES

A. Use covers, masking tape, other method when protection is necessary, or requested by Owner or Engineer. Remove unwanted paint carefully without damage to finished paint or surface. If damage does occur, repair the entire surface adjacent to and including the damaged area without visible lapmarks and without additional cost to the Owner.

B. Take all necessary precautions to contain dispersion of abrasive blasting debris and paint to the limits of the work. Take into account the effect of wind and other factors which may cause dispersion of the abrasive blasting debris and paint. Suspend painting operations when abrasive blasting debris or paint cannot be properly confined. Assume all responsibilities and cost associated with damage to adjacent structures, vehicles, or surfaces caused by the surface preparation and painting operations.

3.06 PIPING AND EQUIPMENT IDENTIFICATION

A. Piping and equipment identification shall be in accordance with Section 15030 – Piping and Equipment Identification Systems.

3.07 SCHEDULE OF COLORS

A. Match colors indicated. Piping and equipment colors are indicated in Section 15030 – Piping and Equipment Identification Systems. Colors which are not indicated shall be selected from the manufacturer's full range of colors by the Engineer. No variation shall be made in colors without the Engineer's approval. Color names and numbers shall be identified according to the appropriate color chart issued by the manufacturer of the particular product in question.

3.08 WORK IN CONFINED SPACES

A. Provide and maintain safe working conditions for all employees. Supply fresh air continuously to confined spaces through the combined use of existing openings, forced

draft fans and temporary ducts to the outside, or direct air supply to individual workers. Exhaust paint fumes to the outside from the lowest level in the contained space. Provide explosionproof electrical fans, if in contact with fumes. No smoking or open fires will be permitted in, or near, confined spaces where painting is being done. Follow OSHA, state/commonwealth, and local regulations at all times.

3.09 OSHA SAFETY COLORS

A. Paint wall around wall-mounted breathing or fire apparatus with the appropriate safety red color; area not to exceed 2 feet wide by 3 feet high, unless apparatus covers the area. Fire apparatus include fire hoses, extinguisher, and hydrants.

B. Paint hazardous areas and objects in accordance with OSHA regulations.

3.10 VOC REGULATIONS

A. Provide paint systems in accordance with local, state, and federal regulations. Where paint systems shown in schedule do not comply substitute equal products with VOC limits which comply with local, state, and federal regulations.

Table 1: Painting Schedule

Surface	Application	Painting System and No. of Coats	Product Reference (Table 2)	Total Min. Dry Film Thickness (Mils)
Concrete and Masonry				
Interior masonry and concrete walls and ceilings	All new structures	1 coat sealer 2 coats acrylic epoxy	101 116	75-85 sq.ft./gal. 4-6/coat
Interior masonry and concrete walls in chemical rooms		1 coat sealer 2 coats epoxy polyamide	117 102	60-80 sq.ft./gal. 4-6/coat
Exterior masonry cavity walls on cavity face of inner wythe	All new structures	Dampproofing	Refer to Individual Specifications	
Exterior below grade if interior is dry	Accessible areas (e.g. pipe galleries, pump rooms, basements)	Waterproofing	Refer to Individual Specifications	
Submerged water	Water retaining side of new wall surfaces where opposite side of wall is interior and dry and where indicated "epoxy waterproofing" on drawing	1 coat resurfacer at a minimum 1/16" on vertical surfaces and as needed to bring surfaces to level 2 coats NSF-600 approved epoxy polyamide	121 105	1/16" 6-10/coat
Submerged wastewater (aerobic)		1 coat resurfacer at a minimum 1/16" on vertical surfaces and as needed to bring surfaces to level 2 coats high solids epoxy 1 coat urethane above the waterline, extending down 1' below the waterline.	121 119 115	1/16" 5-10/coat 2-5
Submerged wastewater (anaerobic)		1 coat resurfacer at a minimum 1/16" on vertical surfaces and as needed to bring surfaces to level 1 coat epoxy primer 1 coat specialty high build epoxy	121 128 130	1/16" 6-10 125
Containment Liner[1]	Interior and exterior secondary containment floors, tank supports and walls	1 coat resurfacer at a minimum 1/16" on vertical surfaces and as needed to bring surfaces to level 1 coat primer 1 coat mortar with embedded fiberglass mat 1 coat saturant coat 1 coat topcoat	121 122 123/124 125 126	1/16" 6-10 60-80 10-12 6-10

Surface	Application	Painting System and No. of Coats	Product Reference (Table 2)	Total Min. Dry Film Thickness (Mils)
Metals				
Interior and exterior nonsubmerged (gloss)	All new blowers, pumps, motors and mechanical equipment, piping, etc.	1 coat epoxy polyamide primer 1 coat epoxy polyamide 1 coat aliphatic polyurethane	104 104 115	3-6 3-6 3-5
Interior insulated		1 coat acrylic	103	2-3
Submerged water	All metal piping, and mechanical equipment, etc.	1 coat MIO/Zinc primer 2 coats NSF-600 approved epoxy	127 105	2.5-3.5 6-10/coat
Submerged Wastewater (Aerobic)		1 coat MIO/Zinc primer 2 coats high solids epoxy 1 coat urethane above the waterline, extending down 1' below the waterline.	127 119 115	2.5-3.5 6-10/coat 3-5
Submerged Wastewater (Anaerobic)		1 coat epoxy primer 1 or 2 coats specialty high build epoxy	128 129	5-10 25-40
Steel doors, windows and door frames, steel stairs, monorails, structural steel, misc. metals (steel), galvanized lintels,		1 tie coat 2 coats aliphatic polyurethane	113 115	1-2 2-5/coat
Aluminum surfaces in contact with concrete		2 coats coal tar	107	26
Shop Primed Structural Steel	Pre-Engineered Buildings	1 tie coat 1 coat epoxy 1 coat epoxy	113 114 102	1-2 3-4 3-4
Other				
Interior: Gypsum Wallboard	All new structures	1 coat acrylic primer/sealer 2 coats acrylic	131 103	2-3/coat
PVC Piping		1 coat epoxy polyamine 1 coat aliphatic polyurethane	104 115	2-6 3-5

1 Painting manufacturer shall verify compatibility of containment liner and chemical to be contained. Where incompatible substitute a compatible coating system.

Ref.	System	Purpose	Product		
			Tnemec Series	CARBOLINE	Sherwin-Williams
101	Acrylic filler	Primer-sealer	130	Sanitile 100	Cement-Plex 875
102	Epoxy polyamine	Finish coat semi-gloss or gloss	N69	Carboguard 60	Macropoxy 646
103	Acrylic	Acrylic finish	1026 or 1028 or 1029	Carbocrylic 3359DTM	DTM Acrylic Primer/Finish
104	Epoxy polyamide	Primer/intermediate/finish	66	Carboguard 60	Macropoxy 646
105	Epoxy	Primer/Finish	21	Carboguard 61/891VOC	Macropoxy 646 PW
107	Coal tar	Sealer	46H-413	Bitumastic 300M	Hi-Mil Sher Tar Epoxy
113	Urethane	Barrier coat	530	Rustbond	-
114	Polyamine Epoxy	Intermediate coat	27	Carboguard 60	Copoxy Primer
115	Aliphatic Polyurethane	Finish coat	1094 or 1095	Carbothane 134HG	Acrolon 218HS
116	Acrylic epoxy	Finish coat	113 or 114	Sanitile 255	Water-Based Catalyzed Epoxy
117	Epoxy block filler	Sealer	1254	Sanitile 500	Kem Cati-Coat HS Epoxy Filler
119	High solids epoxy	Finish coat	104	Carboguard 890	Dura-Plate 235
121	Cementitious Epoxy	Resurfacer	218	-	-
122	Secondary Containment	Primer	201	-	-
123	Secondary Containment	Novolac Epoxy Mortar Bedcoat	239SC-MCK	-	-
124	Secondary Containment	Fiberglass Reinforcement	211-0215 or 211-0216	-	-
125	Secondary Containment	Novolac Epoxy Saturant Coat	239SC-RCK	-	-
126	Secondary Containment	Novolac Epoxy Topcoat	282	-	-
127	Submerged Metals	MIO/Zinc Urethane Primer	1	-	-
128	Severe Wastewater Finish - Metal	High Build Epoxy	435	-	-

Ref.	System	Purpose	Product		
			Tnemec Series	CARBOLINE	Sherwin-Williams
129	Severe Wastewater Finish - Metal	High Build Epoxy	435	-	-
130	Severe Wastewater Finish – Concrete	High Build Epoxy	436	-	-
131	Drywall primer/sealer	Vinyl Acrylic	51	-	-

Table 2: Product Listing

[END OF SECTION]

SECTION 11000

EQUIPMENT - GENERAL

PART 1 – GENERAL

1.01 THE REQUIREMENT

A. The Contractor shall furnish, install, test, and place in acceptable operation all mechanical equipment and all accessories as specified herein, as shown on the Drawings, and as required for a complete and operable system.

B. The mechanical equipment shall be provided complete with all accessories, special tools, spare parts, mountings, shims, sheaves, couplings, and other appurtenances as specified, and as may be required for a complete and operating installation.

C. The Contractor shall provide the Owner complete and operational equipment/systems. To this end, it is the responsibility of the Contractor to coordinate all interfaces with related mechanical, structural, electrical, instrumentation, and control work and to provide necessary ancillary items such as controls, wiring, etc., to make each piece of equipment operational as shown and specified.

D. The complete installation shall be free from excessive vibration, cavitation, noise, and oil or water leaks.

1.02 REFERENCE SPECIFICATIONS, CODES, AND STANDARDS

A. All equipment, materials, and installations shall conform to the requirements of the most recent editions with latest revisions, supplements, and amendments of the specifications, codes, and standards listed in the individual specifications.

1.03 ACTION/INFORMATIONAL SUBMITTALS

A. Product Data: Comply with Contract Documents submittal requirements.

B. Shop Drawings shall be submitted to the Engineer for all equipment and shall include the following additional information:

1. Equipment name, identification number and specification number.

2. Performance characteristics and descriptive data.

3. Detailed equipment dimensional drawings and setting plans.

4. Drive and motor data as required by individual specifications. Where pump and motor speeds are to be regulated by variable speed drives, the Contractor shall coordinate, furnish and exchange all necessary requirements with the respective

equipment manufacturers to ensure compatibility and shall submit pump, motor and variable speed drive shop drawings together as a complete system.

5. Information on bearing types and bearing life.

6. Gear box design and performance criteria and AGMA service factor.

7. Piping schematics.

8. Equipment protective device details and connection diagrams.

9. Panel layout drawings, schematic wiring diagrams, and component product data sheets for control panels.

10. A list of spare parts and special tools to be provided.

11. Any additional information required to demonstrate conformance with the equipment specifications.

12. Warranty documentation including statement of duration of warranty period and contact phone numbers and addresses for warranty issues.

13. Shipment, delivery, handling, and storage instructions.

1.04 CLOESOUT SUBMITTALS

A. Submit warranty documentation.

B. Submit Operation and Maintenance (O&M) manuals.

1.05 MAINTENANCE MATERIALS SUBMITTALS

A. Operation and Maintenance (O&M) manuals shall be submitted in accordance with:

1. Section 01730 – Operation and Maintenance Data.

B. Spare parts and extra materials shall be provided in accordance with the individual specifications:

1. For spare parts, extra stock materials, and tools, submit quantity of items specified in associated Specification Section.

1.06 QUALTIY ASSURANCE SUBMITTALS

A. Factory testing plan.

B. Factory Test Results shall be submitted and approved prior to shipment of equipment.

C. Field testing plan.

D. Preliminary field test data.

E. Final field test data.

1.07 GENERAL INFORMATION AND DESCRIPTION

A. All parts of the equipment furnished shall, be designed and constructed for the maximum stresses occurring during fabrication, transportation, installation, testing, and all conditions of operation. All materials shall be new and shall conform to all applicable Sections of these Specifications.

B. All parts of duplicate equipment shall be interchangeable without modification. Manufacturer's design shall accommodate all the requirements of these Specifications.

C. Equipment and appurtenances shall be designed in conformity with specifications, codes and reference standards.

D. All bearings and moving parts shall be protected by bushings or other Engineer approved means against wear, and provision shall be made for accessible lubrication by extending lubrication lines and fittings to approximately 30 inches above finished floor elevation.

E. Details shall be designed for appearance as well as utility. Protruding members, joints, corners, gear covers, etc., shall be finished in appearance. All exposed welds on machinery shall be ground smooth and the corners of structural shapes shall be rounded or chamfered.

F. Machinery parts shall conform within allowable tolerances to the dimensions shown on the working drawings.

G. All machinery and equipment shall be safeguarded in accordance with the specifications, codes, and reference standards.

H. All rotating shafts, couplings, or other moving pieces of equipment shall be provided with protective guards of sheet metal or wire mesh, neatly and rigidly supported. Guards shall be removable as required to provide access for repairs.

I. All equipment greater than 100 pounds shall have lifting lugs, eyebolts, etc., for ease of lifting, without damage or undue stress exerted on its components.

J. All manufactured items provided under this Section shall be of current manufacture and shall be the products of manufacturers specializing in the manufacture of such products.

1.08 EQUIPMENT WARRANTIES

A. Warranty requirements shall be as specified in the individual equipment specifications.

PART 2 – PRODUCTS

2.01 ANCHORS AND SUPPORTS

A. The Contractor shall furnish, install, and protect all necessary guides, bearing plates, anchor and attachment bolts, and all other appurtenances required for the installation of the devices included in the equipment specified. Working Drawings for installation shall be furnished by the equipment manufacturer, and suitable templates shall be used by the Contractor when required in the detailed equipment Specifications.

B. Anchor bolts and fasteners shall be furnished in accordance with the individual equipment Specifications. All anchor bolts, guard bolts, washers, clips, clamps, and fasteners of any type shall be constructed of 316 stainless steel, unless otherwise specified the individual equipment Specifications.

C. The Contractor shall provide all concrete pads or pedestals required for equipment furnished. All concrete equipment pads shall be a minimum of 6” high, unless otherwise shown on the Drawings and shall be doweled.

D. Pipe sleeves or other means of adjusting anchor bolts shall be provided where indicated or required. Equipment shall be leveled by first using sitting nuts on the anchor bolts, and then filling the space between the equipment base and concrete pedestal with non-shrink grout, unless alternate methods are recommended by the manufacturer and are acceptable to the Engineer (such as shim leveling pumps, or chemical grout).

E. Equipment anchors shall be in accordance with the manufacturer’s recommendations with respect to diameter, length, spacing, quantity, and depth of embedment.

2.02 STRUCTURAL STEEL

A. All materials shall conform to applicable provisions of the AISC Specifications for the design and fabrication of structural steel, and to pertinent ASTM Standard Specifications.

2.03 DISSIMILAR METALS

A. All dissimilar metals shall be isolated to the satisfaction of the Engineer.

2.04 GALVANIZING

A. Where required by the equipment specifications, galvanizing shall be performed.

2.05 STANDARDIZATION OF GREASE FITTINGS

A. The grease fittings on all mechanical equipment shall be such that they can be serviced with a single type of grease gun. Fittings shall be “Zerk” type.

2.06 ELECTRICAL REQUIREMENTS

A. All electrical equipment and appurtenances, including but not limited to motors, panels, conduit, and wiring, etc., specified in the equipment specifications shall comply with the applicable requirements of the individual electrical specifications and the latest National Electric Code.

B. In the individual equipment specifications, specified motor horsepower is intended to be the minimum size motor to be provided. If a larger motor is required to meet the specified operating conditions and performance requirements, the Contractor shall furnish the larger sized motor and shall upgrade the electrical service (conduit, wires, starters, etc.) at no additional cost to the Owner.

C. Where variable frequency drives (VFDs) are specified, the Contractor shall be responsible for coordinating between equipment supplier and VFD supplier to ensure a complete and operational system.

2.07 ACCESSORIES, SPARE PARTS, AND SPECIAL TOOLS

A. Accessories, spare parts, and special tools shall be provided in accordance with the individual equipment specifications.

2.08 EQUIPMENT IDENTIFICATION

A. All mechanical equipment shall be provided with a substantial stainless-steel nameplate, mechanically fastened with stainless steel hardware in a conspicuous place, and clearly inscribed with the manufacturer's name, year of manufacture, serial number, and principal rating data.

B. Each pump and other piece of mechanical equipment shall also be identified as to name and number by a suitable laminated plastic or stainless-steel nameplate mechanically fastened with stainless steel hardware; for example, "Raw Water Pump #1". Coordinate name and number with same on remotely located controls, control panel, and other related equipment.

C. Nameplates shall not be painted over.

PART 3 – EXECUTION

3.01 SHOP TESTING

A. All equipment shall be tested in the shop of the manufacturer in a manner which shall conclusively prove that its characteristics comply fully with the requirements of the Contract Documents and that it will operate in the manner specified or implied.

B. No equipment shall be shipped to the project until the Engineer has been furnished a certified copy of test results and has notified the Contractor, in writing, that the results of such tests are acceptable.

C. A certified copy of the manufacturer's actual test data and interpreted results thereof shall be forwarded to the Engineer for review.

D. If required by the individual equipment Specifications, arrangements shall be made for the Owner/Engineer to witness performance tests in the manufacturer's shop. The Engineer shall be notified ten working days before shop testing commences. Expenses are to be paid by Contractor.

3.02 SHIPMENT, DELIVERY, HANDLING AND STORAGE

A. Shipment, delivery, and handling of equipment and materials shall be in accordance with individual equipment specifications and manufacturer’s written instructions.

B. Storage of equipment and materials shall be in accordance with individual equipment specifications and manufacturer’s written instructions.

3.03 MANUFACTURER’S FIELD SERVICES

A. Manufacturer’s field services shall be in accordance with individual equipment specifications.

B. The Contractor shall arrange for a qualified factory trained Technical Representative from each manufacturer or supplier of equipment who is regularly involved in the inspection, installation, start-up, troubleshooting, testing, maintenance, and operation of the specified equipment. Qualification of the Technical Representative shall be appropriate to the type of equipment furnished and subject to the approval of the Engineer and the Owner. Where equipment furnished has significant process complexity, furnish the services of engineering personnel knowledgeable in the process involved and the function of the equipment. When necessary, the Contractor shall schedule multiple Technical Representatives to be present at the same time for the purpose of coordinating the operation of multiple pieces of related equipment.

C. Services of the Technical Representative will require a minimum of two (2) site visits, one for installation and testing and one for startup and training, and will be for the minimum number of days recommended by the manufacturer and approved by the Engineer but will not be less than the number of days specified in individual equipment sections. Additional site visits may be required as described below and in the equipment specifications.

D. For each site visit, the Technical Representative shall submit jointly to the Owner, the Engineer, and the Contractor a complete signed report of the results of his inspection, operation, adjustments, and testing. The report shall include detailed descriptions of the

points inspected, tests and adjustments made, quantitative results obtained if such are specified.

E. The manufacturer's Technical Representative shall provide the following services.

1. Installation: The Technical Representative shall inspect the installed equipment to verify that installation is in accordance with the manufacturer’s requirements. Where required by individual equipment specifications, the Technical Representative shall also supervise the installation of the equipment.

2. Testing: After installation of the equipment has been completed and the equipment is presumably ready for operation, but before it is operated by others, the Technical Representative shall inspect, operate, test, and adjust the equipment as required to prove that the equipment is in proper condition for satisfactory operation under the conditions specified. Unless otherwise noted in the signed site visit report, the report shall constitute a certification that the equipment conforms to the requirements of the Contract and is ready for startup and that nothing in the installation will render the manufacturer's warranty null and void. The report shall include date of final acceptance field test, as well as a listing of all persons present during tests.

3. Startup: The Technical Representative shall start up the equipment for actual service with the help of the Contractor. If equipment or installation problems are experienced, the Contractor and the representative shall provide the necessary services until the equipment is operating satisfactorily and performing according to the specifications at no additional cost to the Owner. Unless otherwise noted in the signed site visit report, the report shall constitute a certification that the equipment conforms to the requirements of the Contract and is ready for permanent operation and that nothing in the installation will render the manufacturer's warranty null and void.

4. Training: Training shall be provided in accordance with individual equipment specifications.

5. Services after Startup: Where required by the individual equipment specifications, the Technical Representative shall return to the project site thirty (30) days after the startup date to review the equipment performance, correct any equipment problems, and conduct operation and maintenance classes as required by the Owner. This follow-up trip is required in addition to the specified services of Technical Representative prior to and during equipment startup. At this time, if there are no equipment problems, each manufacturer shall certify to the Owner in writing that his equipment is fully operational and capable of meeting operating requirements. If the equipment is operating incorrectly, the Technical Representative will make no certification to the Owner until the problems are corrected and the equipment demonstrates a successful thirty (30) days operating period.

F. The Contract amount shall include the cost of furnishing the Technical Representative for the minimum number of days specified, and any additional time required to achieve successful installation and operation. The times specified for services by the Technical Representative in the equipment Specifications are exclusive of travel time to and from the facility and shall not be construed as to relieve the manufacturer of any additional visits to provide sufficient service to place the equipment in satisfactory operation.

G. The Contractor shall notify the Engineer at least 14 days in advance of each equipment test or Owner training session.

H. The Technical Representative shall sign in and out at the office of the Engineer's Resident Project Representative on each day the Technical Representative is at the project.

3.04 INSTALLATION

A. The Contractor shall obtain written installation manuals from the equipment manufacturer prior to installation. Equipment shall be installed strictly in accordance with recommendations of the manufacturer. A copy of all installation instructions shall be furnished the Engineer's field representative one week prior to installation.

B. The Contractor shall have on hand sufficient personnel, proper construction equipment, and machinery of ample capacity to facilitate the work and to handle all emergencies normally encountered in work of this character. To minimize field erection problems, mechanical units shall be factory-assembled insofar as practical.

C. Equipment shall be erected in a neat and workmanlike manner on the foundations at the locations and elevations shown on the Drawings.

D. All equipment sections and loose items shall be match-marked prior to shipping.

E. For equipment that requires field alignment and connections, the Contractor shall provide the services of the manufacturer's qualified mechanic, millwright, or machinist, to align the equipment and motor prior to making piping connections or anchoring the equipment base. Alignment shall be as specified herein.

F. The Contractor shall furnish oil and grease for initial operation and testing. The manufacturer and grades of oil and grease shall be in accordance with the recommendations of the equipment manufacturer.

3.05 ALIGNMENT

A. Set equipment to dimensions shown on drawings. Dimensions shall be accurate to +/- 1/16 inch unless otherwise noted on the drawings. Wedges shall not be used for leveling, aligning, or supporting equipment.

B. General Equipment Leveling: Non-rotating equipment shall be set level to +/- 1/16 inch per 10-foot length (.005 inch per foot) unless otherwise noted on the drawings. Shims

shall be used unless equipment is furnished with leveling feet. Set shims flush with equipment baseplate edges. When grouting is required, equipment shall be shimmed to allow a minimum of one-inch grout thickness. Grout shall cover shims at least 3 inches. Final level check shall be held for inspection and approval by Engineer before proceeding.

C. Grouting

1. Fill anchor bolt holes or sleeves with grout, after bolt alignment is proven, and prior to placing grout under equipment bases.

2. Surface Preparation. Roughen surface by chipping, removing laitance, and unsound concrete. Clean area of all foreign material such as oil, grease, and scale. Saturate area with water at least 4 hours prior to grouting, removing excess water ponds.

3. Application. Place grout after the equipment base has been set and its alignment and level have been approved. Form around the base, mix grout, and place in accordance with the grout manufacturers published instructions. Eliminate all air or water pockets beneath the base using a drag chain or rope.

4. Finishing. Point the edges of the grout to form a smooth 45-degree slope.

5. After grout has cured (not before 3 days after placement) paint exposed surfaces of grout with shellac.

6. Level Verification. After grout has cured, and immediately prior to drive alignment, recheck equipment for level and plumb. Re-level and square as necessary. Hold final checks for inspection and approval by Engineer.

D. Inspect for and remove all machining burrs or thread pulls in female holes on mating surfaces of mounting frame and machine feet.

E. Inspect and clean equipment mounting base pads, feet, and frames to remove all grease, rust, paint, and dirt.

F. Assembled equipment shafts shall be set level to .0015 inches per foot of shaft length (+/- .0005 inches) up to a maximum of 0.015 inches for any length shaft unless the manufacturers requirements are more stringent or unless otherwise noted in the equipment specifications. Use the machined surfaces on which the equipment sets for the base/mounting frame leveling plane. Use the machined shaft surface for equipment leveling plane.

G. Sprocket and Sheave Alignment. Check shaft mounted components for face runout and eccentricity (outside diameter) runout by magnetically mounting a dial indicator on a stationary base and indicating over 360 degrees on a continuous machined surface at

the outside diameter of the component. Maximum allowable total indicated face runout and eccentricity for sprockets and sheaves will be per ANSI Standard B29.1-1975.

H. Belt tensioning. Set drive belt tension to manufacturer's specification for the belt type. Recheck alignment after drive tensioning.

I. Thermal/Mechanical Growth. Thermal/mechanical growth corrections for driver and driven machines will be used in vertical and horizontal alignment where applicable. The equipment manufacturer will determine thermal/mechanical growth applicability for any machine and provide the correction offsets to be used.

J. Rotating Shaft Alignment

1. Fixtures will be set up on the driver and driven machine, machines shaft surfaces. Machined coupling hubs may be used only if there is no clearance to mount fixtures directly on the shafts.

2. Primary alignment method for direct drive machines is when coupled. Uncoupled alignment will be used only when approved by the Engineer.

3. Account for possible coupling flex by always rotating coupled machines in the same direction during alignment.

4. Uncoupled machines must be connected so that both shafts turn together without relative motion during alignment.

5. Indicator bar sag will be measured and included for each reverse indicator alignment setup.

6. Reverse Dial Indicator. The final maximum allowable misalignment: vertical and horizontal from the desired targets of .000 inches (for a non-thermal growth machine) or from the given target readings (for a thermal growth machine) must meet both of the following conditions simultaneously: 1/2 the final total indicator reading at each indicator will be no more than shown in the table below and the final remaining correction at each machine foot be no more than .001 inches of required movement.

Machine Speed (RPM)	Total Misalignment* (inches)
Up to 1800	.002
1800 and greater	.001

* 1/2 indicator reading

3.06 FIELD TESTING

A. Field testing shall be in accordance with the individual equipment specifications.

B. All equipment shall be set, aligned, and assembled in conformance with the manufacturer's drawings and instructions. Provide all necessary calibrated instruments to execute performance tests. Submit report certified by the pump manufacturer’s representative.

C. Preliminary Field Tests, Yellow Tag

1. As soon as conditions permit, after the equipment has been secured in its permanent position, the Contractor shall:

a. Verify that the equipment is free from defects.

b. Check for alignment as specified herein.

c. Check for direction of rotation.

d. Check motor for no load current draw.

2. Contractor shall flush all bearings, gear housings, etc., in accordance with the manufacturer's recommendations, to remove any foreign matter accumulated during shipment, storage or erection. Lubricants shall be added as required by the manufacturer's instructions.

3. When the Contractor has demonstrated to the Engineer that the equipment is ready for operation, a yellow tag will be issued. The tag will be signed by the Engineer, or his assigned representative and attached to the equipment. The tag shall not be removed.

4. Preliminary field tests, yellow tag, must be completed before equipment is subjected to final field tests, blue tag.

D. Final Field Tests, Blue Tag

1. Upon completion of the above, and at a time approved by the Engineer, the equipment will be tested by operating it as a unit with all related piping, ducting, electrical and controls, and other ancillary facilities.

2. The equipment will be placed in continuous operation as prescribed or required and witnessed by the Engineer or his assigned representative and the Owner or his assigned representative.

3. The tests shall prove that the equipment and appurtenances are properly installed, meet their operating cycles and are free from defects such as overheating,

overloading, and undue vibration and noise. Operating field tests shall consist of the following:

a. Check equipment for excessive vibration and noise as specified herein.

b. Check motor current draw under load conditions. The rated motor nameplate current shall not be exceeded.

c. Recheck alignment with dial indicators where applicable, after unit has run under load for a minimum of 24 hours.

E. Additional field testing recommended by the manufacturer shall be performed at no cost to Owner.

F. Until final field tests are acceptable to the Engineer, the Contractor shall make all necessary changes, readjustments, and replacements at no additional cost to the Owner.

G. Upon acceptance of the field tests, a blue tag will be issued. The tag will be signed by the Engineer and attached to the unit. The tag shall not be removed, and no further construction work will be performed on the unit, except as required during start-up operations and directed by the Engineer.

H. Defects which cannot be corrected by installation adjustments will be sufficient grounds for rejection of any equipment.

I. All costs in connection with field testing of equipment such as lubricants, temporary instruments, labor, equipment, etc., shall be borne by the Contractor. Power, fuel, chemicals, water, etc. normally consumed by specific equipment shall be supplied by the Owner unless otherwise specified in the individual equipment specifications.

J. The Contractor shall be fully responsible for the proper operation of equipment during tests and instruction periods and shall neither have nor make any claim for damage which may occur to equipment prior to the time when the Owner formally takes over the operation thereof.

K. Field testing of electric motors shall be in accordance with individual electrical and equipment specifications.

3.07 VIBRATION TESTING

A. Vibration testing shall be in accordance with individual equipment specifications.

3.08 FAILURE OF EQUIPMENT TO PERFORM

A. Any defects in the equipment, or failure to meet the guarantees or performance requirements of the Specifications shall be promptly corrected by the Contractor by replacements or otherwise.

B. If the Contractor fails to make these corrections, or if the improved equipment shall fail again to meet the guarantees or specified requirements, the Owner, notwithstanding his having made partial payment for work and materials which have entered into the manufacture of said equipment, may reject said equipment and order the Contractor to remove it from the premises at the Contractor's expense.

C. The Contractor shall then obtain specified equipment to meet the contract requirements or upon mutual agreement with the Owner, adjust the contract price to reflect not supplying the specific equipment item.

D. In case the Owner rejects said equipment, then the Contractor hereby agrees to repay to the Owner all sums of money paid to him for said rejected equipment on progress certificates or otherwise on account of the lump sum prices herein specified.

E. Upon receipt of said sums of money, the Owner will execute and deliver to the Contractor a bill of sale of all his rights, title, and interest in and to said rejected equipment; provided, however, that said equipment shall not be removed from the premises until the Owner obtains from other sources other equipment to take the place of that rejected.

F. Said bill of sale shall not abrogate Owner's right to recover damages for delays, losses, or other conditions arising out of the basic contract.

3.09 PAINTING

A. All surface preparation, shop painting, field repairs, finish painting, and other pertinent detailed painting specifications shall conform to applicable paragraphs of Section 09900 – Painting.

B. All shop coatings shall be compatible with proposed field coatings.

C. All inaccessible surfaces of the equipment, which normally require painting, shall be finished painted by the manufacturer. The equipment and motor shall be painted with a high-quality epoxy polyamide semi-gloss coating specifically resistant to chemical, solvent, moisture, and acid environmental conditions, unless otherwise specified.

D. Gears, bearing surfaces, and other unpainted surfaces shall be protected prior to shipment by a heavy covering of rust-preventive compound sprayed or hand applied which shall be maintained until the equipment is placed in operation. This coating shall be easily removable by a solvent.

3.10 WELDING

A. The Equipment Manufacturer's shop welding procedures, welders, and welding operators shall be qualified and certified in accordance with the requirement of AWS D1.1 "Structural Welding Code - Steel" or AWS D1.2 "Structural Welding Code - Aluminum" of the American Welding Society, as applicable.

B. The Contractor's welding procedures, welders, and welding operators shall be qualified and certified in accordance with the requirements of AWS D1.1 "Structural Welding Code - Steel" or AWS D1.2 "Structural Welding Code - Aluminum" of the American Welding Society, as applicable.

C. The Contractor shall perform all field welding in conformance with the information shown on the Equipment Manufacturer's drawings regarding location, type, size, and length of all welds in accordance with "Standard Welding Symbols" AWS A2.0 of the American Welding Society, and special conditions, as shown by notes and details.

[END OF SECTION]

SECTION 11100

PUMPS – GENERAL

PART 1 – GENERAL

1.01 THE REQUIREMENT

A. Comply with the requirements of Section 11000, Equipment - General.

B. The pumps shall be provided complete with all accessories, special tools, spare parts, mountings, shims, sheaves, couplings, and other appurtenances as specified, and as may be required for a complete and operating installation.

C. The provisions of this section shall apply to all pumps and pumping equipment specified except where specifically noted otherwise in the Contract Documents.

D. All pumps provided under an individual specification section shall be by the same manufacturer unless otherwise indicated in the specification.

E. All equipment for the pumps, including motors, cans and bases, shall be provided as a complete unit by the pump Manufacturer.

F. The pump supplier shall have unit responsibility for coordinating the proper pump mounting system with the Contractor to ensure stable pump operation free from abnormal vibration.

G. The pump supplier shall include, in his bid, time, labor, materials and tools required for installation assistance, testing and start-up with the Contractor.

1.02 REFERENCE SPECIFICATIONS, CODES AND STANDARDS

A. All equipment, materials, and installations shall conform to the requirements of the most recent editions with latest revisions, supplements, and amendments of the specifications, codes, and standards listed in the individual specifications.

B. Pumping system equipment, installation and testing shall be in accordance with the following applicable codes and standards. All standards shall be the latest version as of the date of project bidding.

1. Hydraulic Institute

    a. ANSI/HI 3.1-3.5 Rotary Pumps for Nomenclature, Definitions, Application and Operation

    b. ANSI/HI 3.6 Rotary Pump Test

    c. ANSI/HI 9.6.1 Rotodynamic Pumps – Guideline for NPSH Margin

d. ANSI/HI 9.6.2 Rotodynamic Pumps for Assessment of Applied Nozzle Loads

e. ANSI/HI 9.6.3 Rotodynamic Pumps – Guideline for Operating Regions

f. ANSI/HI 9.6.4 Rotodynamic Pumps for Vibration Measurements and Allowable Values

g. ANSI/HI 9.6.5 Rotodynamic Pumps Guideline for Condition Monitoring

h. ANSI/HI 9.6.6 Rotodynamic Pumps for Pump Piping

i. ANSI/HI 9.6.8 Rotodynamic Pumps -Guideline for Dynamics of Pumping Machinery

j. ANSI/HI 9.8 Rotodynamic Pumps for Pump Intake Design

k. ANSI/HI 11.6 Rotodynamic Submersible Pumps for Hydraulic Performance, Hydrostatic Pressure, Mechanical and Electrical Tests

l. ANSI/HI 12.1-12.6 Rotodynamic Slurry Pump for Nomenclature, Definitions, Applications and Operation

m. ANSI/HI 14.1-14.2 Rotodynamic Pumps for Nomenclature and Definitions

n. ANSI/HI 14.3 Rotodynamic Pumps for Design and Application

o. ANSI/HI 14.6 Rotodynamic Pumps for Hydraulic Performance Acceptance Tests

2. American Society of Mechanical Engineers

   a. ANSI/ASME B73.1 Specifications for Horizontal End Suction Centrifugal Pumps for Chemical Process

3. American Petroleum Institute

   a. ANSI/API Standard 610 Centrifugal Pumps for Petroleum, Petrochemical and Natural Gas Industries

4. American Water Works Association

   a. ANSI/AWWA E103 Standard for Horizontal and Vertical Line-Shaft Pumps

5. American Society for Testing and Materials

   a. A36 Specification for Structural Steel

   b. A48 Specification for Gray Iron Castings

c. A53 Specification for Pipe, Steel, Black and Hot-Dipped, Zinc-Coated, Welded and Seamless

d. A148 Specification for Steel Castings, High Strength, for Structural Purposes

e. A193 Specification for Alloy Steel and Stainless Steel Bolting Materials for High Temperature Service

f. A276 Specification for Stainless Steel Hot/Cold-Finished Bars

g. A322 Specification for Steel Bars, Alloy, Standard Grades

h. A514 Specification for High Yield Strength, Quenched and Tempered alloy Steel Plate, Suitable for Welding

i. A532 Specification for Abrasion-Resistant Cast Irons

j. A536 Specification for Ductile Iron Castings

k. A565 Specification for Martensitic Stainless Steel Bars

l. A582 Specification for Free-Machining Stainless and Heat-Resisting Steel Bar, Hot-Rolled and Cold-Rolled

m. A743 Specification for Castings, Iron-Chromium, Iron-Chromium-Nickel and Nickel-Base, Corrosion-Resistant for General Application

n. B148 Specification for Aluminum-Bronze Sand Castings

o. B584 Specification for Copper Alloy Sand Castings for General Application

6. American National Standards Institute

   a. B16.1 Standard for Cast Iron Pipe Flanges and Flanged Fittings

   b. B16.5 Standard for Pipe Flanges and Flanged Fittings

7. ANSI/NFPA 70 National Electric Code

8. Society of Automotive Engineers SAE J404 Chemical Compositions of SAE Alloy Steels

9. Standard, ISO 1940 – Mechanical Vibration – Balance quality requirements for rotors balance quality grade for rotors in a constant rigid state.

1.03 ACTION/INFORMATIONAL SUBMITTALS

A. Provide submittals identified in Specification Section 11000, Equipment General Provisions in addition to the submittals identified herein and in addition to the submittals identified in the individual pumping specification sections.

B. Shop Drawings shall include the following information in addition to the requirements specified elsewhere in the Contract Documents and shall include the following information:

1. Pump name, identification number, and specification number.

2. Performance characteristics and descriptive data, including but not limited to pump performance curves at rated speed and reduced speeds (if reduced speeds are specified). Curves shall indicate flow, head, impeller diameter, efficiency, brake horsepower, and NPSH required. Curves shall identify minimum continuous stable flow (minimum flow to avoid suction recirculation), preferred operating region (POR) and allowable operating region (AOR) per the latest version of ANSI/HI 9.6.3. Performance curves submitted shall be for the entire pump assembly, including efficiency corrections and losses. Pump performance curves shall be submitted both in the form of performance data cut sheets and in tabular format. Tabular data shall include the following:

a. Flow

b. Pump Head

c. NPSH required

d. Pump Efficiency

e. A minimum of 10 data points shall define rotodynamic pump performance curves listed above. Performance curve data points shall include the following:

1) best efficiency point

2) all specified operating points

3) preferred operating range minimum and maximum

4) allowable operating range minimum and maximum

5) shutoff condition

6) runout.

7) The remainder of the points shall be distributed evenly to clearly define the shape of each of the curves.

8) Each data point shall be reported to a minimum of three (3) significant figures.

9) The curve data shall align with the HI acceptance grade (1B, 2B, 1U, etc.) as specified in the individual pump specification and shall explicitly state the applicable tolerance band, as defined by the Hydraulic Institute Standards, associated with each value.

3. Minimum submergence requirements shall be provided for vertically suspended pumps and submersible pumps.

4. Detailed dimensional drawings and setting plans including but not limited to:

   a. General cutaway sections

   b. Materials

   c. Dimension of shaft projections

   d. Shaft and keyway dimensions

   e. Shaft diameter

   f. Shaft-impeller connection details

   g. Dimension between bearings

   h. General dimensions of pump

   i. Suction head bolt orientation

   j. Anchor bolt locations

   k. Forces.

   l. Assembly views

   m. Provide weight of entire pump assembly, including motor and base weight of individual major subassemblies. Indicate the weight of each component, and total static and dynamic loads imparted by the equipment to the supporting structure.

   n. Impeller

   o. Drawings shall identify each component by tag number to which the catalog data and detail sheets pertain.

5. Complete motor data shall include but not be limited to size, make, type and characteristics along with wiring diagrams. Where pump and motor speeds are to be regulated by variable speed drives, the Contractor shall coordinate, furnish, and exchange all necessary requirements with the respective equipment manufacturers to ensure compatibility and shall submit pump, motor, and variable speed drive shop drawings together as a complete system.

6. Information on bearing types and bearing life.

7. Gear box design and performance criteria and AGMA service factor.

8. Equipment protective device details and connection diagrams.

9. Details of shaft sealing system including seal/packing type, seal water control devices, and seal water piping schematic.

10. Information on pump appurtenances including couplings, shaft guards, v-belt drive systems, etc.

11. Submersible pump submittals shall also include:

    a. Product data sheets for power and control cables, length of cables and cable support system.

    b. Details on pump guide rail system and mounting requirements.

    c. Minimum allowable pump submergence

    d. Details on submersible pump's retrieval system.

12. Any additional information required to demonstrate compliance with the specifications.

C. Results of structural, lateral, and torsional dynamic analyses as required herein and in the individual specification sections.

D. Shipment, Delivery, Handling and Storage instructions.

E. Installation instructions.

F. Manufacturer's literature and brochures

G. Lubrication Information: Complete lubrication instructions and lubricant schedule, including manufacturer's recommended lubricant. All lubricants shall be food grade, NSF 61 approved. Schedule shall include frequency of lubricant application, type of lubricant, and instructions regarding lubricant application

H. Materials of construction and associated specifications (such as AISI, ASTM, SAE, etc.), including grade and type.

I. Coatings: Coating system data and description of coating system, surface preparation and shop painting, including certification that the shop paint is compatible with the finish paint.

1.04 CLOSEOUT SUBMITTALS

A. Submit warranty documentation in accordance with the Contract Documents.

B. Operation and Maintenance (O&M) manuals shall be submitted in accordance with:

1. Section 01730 – Operation and Maintenance Data.

2. Section 11000 – Equipment - General.

1.05 QUALTIY ASSURANCE SUBMITTALS

A. Factory testing plan.

B. Factory Test Results shall be submitted and approved prior to shipment of equipment.

C. Field testing plan.

D. Preliminary field test data.

E. System field quality control testing.

F. Final field test data.

G. Certified test reports.

H. Startup report including data substantiation of successful completion of 30-day operational demonstration of performance.

1.06 GENERAL INFORMATION AND DESCRIPTION

A. Comply with Section 11000, Equipment – General.

1.07 WARRANTY

A. Warranty requirements shall be as specified in the individual equipment specifications.

B. Comply with the Equipment Warranties requirements specified in Section 11000, Equipment.

1.08 OPERATING CONDITIONS AND PERFORMANCE REQUIREMENTS:

A. When operating at the maximum output speed each pump shall have a characteristic performance curve which meets the conditions listed in the pump schedule. The pumps and drive motors shall be capable of operating satisfactorily under the full-range of speed, flow and pressure conditions as defined by the pump schedule. Pump efficiency as defined herein shall include all mechanical losses from bearings and shaft seals.

B. Each pumping unit and its driving equipment shall be designed and constructed to withstand the maximum turbine run-away speed of the unit due to backflow through the pump with the primary TDH specified available at the pump discharge flange. Maximum reverse run-away speed shall not exceed 130 percent of the design operating speed.

C. Pump manufacture shall certify a Minimum Continuous Stable Flow (MCSF) rating at maximum speed that is lower than the specified minimum operating flow. Where a reduced speed operating condition is specified, the manufacturer shall also certify MCSF at the pump speed required to meet this condition.

D. Factory test acceptance grade for rating point shall be as specified herein, except where superseded via specification and/or scheduled values in the individual pump specifications, however power required shall not exceed the rated motor horsepower.

E. Pump Operating Conditions: Refer to respective individual pump specifications for specific performance requirements.

PART 2 – PRODUCTS

2.01 GENERAL

A. Performance Curves: All centrifugal pumps shall have a continuously rising curve. In no case shall the required horsepower at any point on the performance curve exceed the rated horsepower of the motor or drive. Safety factors will not be considered in determining compliance with this requirement.

B. Suction and discharge flanges shall conform to ASME B16.1 or B16.5 dimensions.

C. For pumps in raw sewage service and as required by individual pump specifications, handholes shall be provided on the pump suction nozzle and the pump volute and shall be shaped to follow the contours of the casing or adjoining piping to avoid any obstructions in the water passage.

D. The minimum ABMA L10 bearing life for all pump, motor and drive bearings shall be 60,000 hours unless otherwise specified in the individual pump specification sections.

2.02 ANCHORS AND SUPPORTS

A. Comply with the following Specification Sections:

1. Specification Section 11000, Equipment - General.

2. Comply with individual pump specifications.

B. Comply with ACI 351.3R-04 – Foundations for Dynamic Equipment.

2.03 DEFAULT MATERIALS

A. Pumps shall be constructed out of the materials specified in respective individual pumping specification sections. Material not specifically called for shall be high-grade, standard commercial quality, free from all defects and imperfection that might affect the serviceability of the product for the purpose for which it is intended, and shall conform to the following requirements unless otherwise specified in individual pumping equipment Specifications:

Component	Material
Casings and Bowls	Close-grained gray cast iron, conforming to ASTM A 48, or equal
Impellers	ASTM B 148, aluminum bronze
Shafts, wetted	Type 400 series stainless steel
Shafts, non-wetted	AISI 4140 steel
Miscellaneous stainless steel parts	Type 316 series stainless steel
Anchor Bolts and Fasteners	Type 316 stainless steel

2.04 COMPONENTS:

A. Refer to individual specification sections for specific requirements.

B. Pump Shaft:

1. The shaft shall be heat treated, turned, ground, and polished over its entire length and shall be provided with keyways on both ends.

2. Shall be sufficiently large in diameter to safely transmit the maximum torque developed by the drive unit and provide a rigid support for the impeller to prevent excessive vibration.

C. Bearings:

1. Bearings shall be designed for continuous heavy duty loads and for both axial and radial thrust loads.

2. The specified AFBMA B-10 life for bearings shall be under worst possible operating conditions.

3. Bearings shall support the shaft and the complete rotating elements.

2.05 STRUCTURAL STEEL

A. Structural steel used for fabricating equipment supports, etc. shall conform to applicable provisions of the AISC Specifications for the design and fabrication of structural steel, and to pertinent ASTM Standard Specifications

2.06 DISSIMILAR METALS

A. All dissimilar metals shall be isolated to the satisfaction of the Engineer.

2.07 GALVANIZING

A. Where required by the equipment specifications, galvanizing shall be performed.

2.08 STANDARDIZATION OF GREASE FITTINGS

A. Grease Fittings: Comply with Section 11000, Equipment - General.

2.09 APPURTENANCES

A. Seals:

1. Mechanical seals shall be furnished as specified in individual pumping equipment sections.

2. If the pump manufacturer recommends a better seal or alternate flushing arrangement for a specific application, the substitution may be submitted to the Engineer for approval in accordance with the Contract Documents.

B. Pressure Gauges:

1. Contractor shall supply all pressure gauges for all pumps by one manufacturer.

2. Gauges shall be provided through the instrumentation subcontractor to match other gauges on the project.

3. All gauges shall be provided with diaphragm seals or isolating ring seals.

4. The Contractor shall furnish and install pressure gauges as shown on the Drawings, but the following gauges shall be provided as a minimum:

a. On the suction and discharge of each pump, except wet-pit submersible pumps and vertical turbine pumps.

b. On the discharge piping of each wet-pit submersible pump and vertical turbine pump in the locations shown on the Drawings or as directed by the Engineer.

5. Gauge ranges shall be coordinated with the pump manufacturer and shall meet the following requirements, except where otherwise specified:

Location	Type	Graduation	Suction Range	Discharge Range
Suction	Single Scale, Compound	FT H20	-34-FT	+34-FT
Discharge	Single Scale	FT H20	0-FT	Greatest of the following: - Shutoff + 5-FT - 130% of Maximum

C. Shaft Couplings:

1. Except as otherwise specified in individual pump specification sections, flexible couplings for direct driven pumps shall be as manufactured by Falk, Dodge, Woods Corp., or equal and shall be furnished with guards in accordance with OSHA Rules and Regulations.

2. Spacer couplings shall be provided where necessary to allow removal of the pump rotating element without disturbing the driver.

3. Comply with protective guard requirements of Section 11000, Equipment - General.

D. Equipment Guards: Provide guards in accordance with OSHA requirements for all rotating assemblies that would otherwise be exposed at the operating deck level.

E. Provide access to:

1. Couplings

2. Oil drains

2.10 ELECTRICAL REQUIREMENTS

A. All electrical equipment and appurtenances, including but not limited to motors, panels, conduit and wiring, etc., specified in the equipment specifications shall comply with the applicable requirements of the individual electrical specifications and the latest National Electric Code.

B. All pumps shall be furnished with motors such that the motor shall not be overloaded throughout the full range of the pump operation. The use of service factor will not be allowed in determining overloaded condition.

C. In the individual pump specifications, specified motor horsepower is intended to be the minimum size motor to be provided. If a larger motor is required to meet the specified operating conditions and performance requirements, the Contractor shall furnish the

larger sized motor and shall upgrade the electrical service (conduit, wires, starters, etc.) at no additional cost to the Owner.

D. Where variable frequency drives (VFDs) are specified, the Contractor shall be responsible for coordinating between pump supplier and VFD supplier to ensure a complete and operational system.

2.11 SPARE PARTS AND SPECIAL TOOLS

A. Accessories, spare parts, and special tools shall be provided in accordance with the individual equipment specifications.

B. Spare parts for equipment shall be furnished where indicated in the equipment Specifications and/or where recommended by the equipment manufacturer.

C. Spare parts shall be identical and interchangeable with original parts.

D. The Contractor shall furnish a one-year supply of all recommended lubricating oils and greases.

2.12 EQUIPMENT IDENTIFICATION

A. Comply with the requirements of Section 11000, Equipment - General.

B. All pumps shall be provided with a substantial stainless steel nameplate, mechanically fastened with stainless steel hardware in a conspicuous place, and clearly inscribed with:

1. the manufacturer's name
2. year of manufacture
3. model number
4. serial number
5. and principal rating data including the following at the primary design point:
    a. Capacity in gallons per minute
    b. rated total dynamic head
    c. speed in rotations per minute
    d. efficiency at the primary design point.

C. Each pump shall also be identified as to name and number by a suitable laminated plastic or stainless steel nameplate mechanically fastened with stainless steel hardware;

for example, "Raw Water Pump – 1 (RWP-1)". Coordinate name and number with same on remotely located controls, control panel, and other related equipment.

D. Nameplates shall not be painted over.

PART 3 – EXECUTION

3.01 SHOP TESTING

A. The terms Shop Testing and Factory Testing shall be considered to be interchangeable.

B. Perform Shop Testing in conformance with Section 11000, Equipment - General.

C. The Contractor shall be responsible for the coordination of factory testing of each pump, variable speed drive, and motor. Pump tests shall utilize the actual motors and pump motor bases and couplings to be furnished with the pumping equipment. Where required as indicated by the individual pump specification sections, variable speed pumps shall be tested with the actual variable speed controllers supplied for the project. Use of the pump manufacturers standard test motors and test stand is not acceptable.

D. Factory testing shall be conducted in accordance with the latest version of Hydraulic Institute Standard 14.6, Hydraulic Performance Acceptance Tests. For submersible pumps, testing shall be conducted in accordance with the latest version of ANSI/HI 11.6.

E. Hydraulic Performance Acceptance Tests

1. The testing procedure shall be submitted to the Engineer for review and approval before scheduling the testing. The Owner/Engineer shall be given at least 2 weeks advanced notice of the scheduled testing date.

2. Notification and payment of expenses for witness testing shall be as described in Section 11000, Equipment - General wherever individual pump specifications call for witness testing.

3. Pump rating point shall be within the tolerances specified for Acceptance Grade 1U unless otherwise specified in the individual pump specifications.

4. Factory performance test shall include a minimum of seven test points between shutoff and runout.

5. Where required by the individual equipment specification sections, NPSH tests shall be conducted to demonstrate compliance with the specified NSPH requirements. Where full curve NPSH testing is required, a minimum of four points shall be tested.

6. Certified test curves shall be provided for all centrifugal pumps unless otherwise specified in the individual pump specifications.

a. Certified tests will not be required for submersible sump pumps with motors less than 5 hp.

b. Certified curves shall identify minimum continuous stable flow (minimum flow to avoid suction recirculation) and preferred operating region (POR) and allowable operating region (AOR) per the latest version of ANSI/HI 9.6.3.

7. Where required by the individual pump specification sections, factory vibration testing shall be performed to demonstrate compliance with HI 9.6.4.

8. For wet pit submersible pumps and vertical turbine pumps, all tests shall be run at minimum pump submergence specified in the individual pump specifications.

9. All instruments shall be calibrated as required by ANSI/HI 14.6 or 11.6 as applicable.

F. Where required in the individual pump specifications, a certified hydrostatic test shall be completed on each pumping unit in accordance with ANSI/HI 14.6 or 11.6 as applicable. Test pressure shall be 1.5 times maximum operating head or 1.25 times shutoff head, whichever is greater.

G. Where required in the individual pump specifications, each individual casting shall be Brinnell tested in a minimum of two places, in an area of representative casting thickness to ASTM Method E-10. Results shall be certified by a registered professional ENGINEER.

H. Shop testing of electric motors shall conform to:

1. Section 11000, Equipment - General.

3.02 SHIPMENT, DELIVERY, HANDLING AND STORAGE

A. Shipment, delivery and handling of equipment and materials shall be in accordance with individual specifications and manufacturer’s written instructions.

B. Storage of equipment shall be in accordance with individual specifications and manufacturer’s written instructions.

C. Factory assembled parts and components shall not be dismantled for shipment unless permission is received in writing from the Engineer.

D. Machined surfaces of all exposed pump openings or other exposed unpainted surfaces shall be protected by wooden blanks or Cosmoline, as appropriate, strongly built and securely bolted thereto.

E. After hydrostatic or other tests, all entrapped water shall be drained prior to shipment, and proper care shall be taken to protect parts from the entrance of water during shipment, storage and handling.

3.03 MANUFACTURER'S FIELD SERVICES

A. Manufacturer’s field services shall be in accordance with individual equipment specifications.

B. Unless otherwise referenced in the individual pump specification section, as a minimum the services of the manufacturer's representative shall be provided for as stated in the following schedule:

Service	Number of Trips	Number of Days/Trip
Installation and Testing	1	2
Startup and Training	1	2
Services after Startup	1	1

C. Any additional time required to achieve successful installation and operation shall be at the expense of the Contractor.

3.04 INSTALLATION

A. Pumping equipment shall be installed in accordance with Section 11000, Equipment General, the manufacturer's recommendations, accepted procedures submitted with the shop drawings and as indicated on the Drawings, unless otherwise accepted by the Engineer.

B. Level pump and motor and grout feet or baseplate with non-shrink grout. Ensure minimum grout depth is obtained as recommended by the pump and grout manufacturers.

C. Drains: All gland seals, air valves, and drains shall be piped to the nearest floor drain or trench drain with stainless steel pipe or copper tube (as appropriate for the environment), properly supported with brackets.

D. Contractor shall have unit responsibility for the proper coordination, sizing, and installation of the pump foundation/mounting requirements based on the manufacturer’s recommendations, subject to Engineer’s review and comment.

3.05 ALIGNMENT

A. Pumping equipment shall be aligned in accordance with Section 11000, Equipment - General, the manufacturer's recommendations, accepted procedures submitted with the shop drawings and as indicated on the Drawings.

B. Equipment shall be aligned and free from binding, scraping, excessive vibration, shaft runout, or other defects. Pump drive shafts shall be measured just prior to assembly to ensure correct alignment without forcing.

C. As a minimum, comply with International Standard, ISO 1940 – Mechanical Vibration – Balance quality requirements for rotors balance quality grade for rotors in a constant rigid state.

3.06 FIELD TESTING

A. Comply with Section 11000, Equipment - General for applicable preliminary and final field testing requirements supplementary to those described in this specification.

B. All pumping units shall be field tested after installation, in accordance with the Contract Documents, to demonstrate satisfactory operation over the full operating speed range, without excessive noise, vibration, cavitation, and overheating of the bearings. The field testing shall be performed in the presence of an experienced field representative of the manufacturer of each major item of equipment, who shall supervise the following tasks and shall certify in writing that the equipment and controls have been properly installed, aligned, lubricated, adjusted, and readied for operation:

1. Pumps shall be tested for vibration over the full specified speed range. Unless otherwise required by individual specification sections, vibration shall be within the limits identified in the latest version of ANSI/HI 9.6.4 (or ANSI/HI 11.6 for submersible pumps), or manufacturer's limits if more stringent. If vibration is greater than 80% of the limits identified in ANSI/HI 9.6.4, follow-up vibration testing shall be completed after a 90-day break-in period to ensure that vibration remains within ANSI/HI 9.6.4 allowable limits. If vibration exceeds the allowable limits during the follow up testing, modifications shall be made as a warranty repair.

2. Bearing temperatures shall be determined. A running time of at least 20 minutes shall be maintained for this test, unless liquid volume available is insufficient for a complete test.

3. Where specified in the individual pump specifications, the natural frequencies of each installed pump shall be determined using the “bump test” method. Natural frequency testing shall demonstrate a minimum of 10% separation from the 1x running speed, 2x running speed and vane pass frequencies.

4. Pump performance shall be documented by obtaining concurrent readings, showing motor voltage, amperage, motor power, flow, pump suction head, and pump discharge head, for at least five (5) pumping conditions at full speed. One of the points shall be within -5% and 0%, and one being within 0% and +5% of the guarantee point flow rate; the remaining three points shall be spaced over the allowable operating range of the pump performance curve with points taken at or near the maximum allowable (shutoff) head region and at or near the maximum allowable flow (runout). Additional reduced speed testing shall be performed to

demonstrate that pumps can achieve performance at turndown conditions where specified in individual pump specification sections. Each power lead to the motor shall be checked for proper current balance. Flow shall be measured to the extent possible by permanently installed instrumentation or drawdown measurement. The rated motor nameplate current shall not be exceeded at any point. Pumps with drive motors rated at less than five horsepower shall only be tested for overcurrent when overheating or other malfunction becomes evident in general testing. Field performance testing shall meet HI 14.6 pump acceptance test grade and tolerance band grade specified herein, unless individual equipment specifications indicate otherwise.

C. The field testing shall be witnessed by the Owner or its representative. The Contractor shall submit to the Engineer a written notification of all pump field tests a minimum of one (1) week prior to testing. In the event of failure of any pump to meet any of the above requirements, the Contractor shall make all necessary modifications, repairs, or replacements to conform to the requirements of the Contract Documents and the pump shall be re-tested at no additional compensation, until found satisfactory. The Contractor shall then certify in writing that the equipment has been satisfactorily tested, and that all final adjustments thereto have been made. Certification shall include date of final acceptance test, as well as a listing of all persons present during tests, and resulting test data. The costs of all Work performed in this Paragraph by factory-trained representatives shall be borne by the Contractor.

3.07 FAILURE OF EQUIPMENT TO PERFORM

A. Comply with Section 11000, Equipment - General.

3.08 PAINTING

A. Comply with Section 11000, Equipment - General.

B. Comply with Section 09900, Painting.

[END OF SECTION]

SECTION 11115

HORIZONTAL CENTRIFUGAL SELF-PRIMING PUMPS

PART 1 – GENERAL

1.01 THE REQUIREMENT

A. The Contractor shall furnish horizontal centrifugal self-priming pumps at the locations shown on the Drawings and as specified herein. All pumps shall be supplied by the same manufacturer.

B. Equipment shall be provided in accordance with the requirements of Section 11000, Equipment - General and Section 11100, Pumps – General.

1.02 DEFINITIONS

A. The following definitions are used to clarify restart requirements.

1. Priming shall refer to the start-up at any time when the pump casing is full of water or sewage.

2. Repriming shall refer to start-up when, for whatever reason, a portion of liquid is lost from the pump casing with the resultant loss of suction head in the suction leg.

3. Static Suction Lift shall be the vertical distance, measured in feet, from the centerline of pump suction to the water surface elevation.

1.03 SUBMITTALS

A. Provide submittals identified in Section 11000, Equipment - General and Section 11100, Pumps - General in addition to the submittals identified herein.

B. Action Submittals: Submit the following:

1. Shop Drawings:

a. Fabrication, assembly, installation, and wiring diagrams.

b. Product Data:

1) Manufacturer’s literature, illustrations, specifications, paint certification (if required) and engineering data including; dimensions, materials, size, weight of pumping assembly with and without motor, and part lists for all components in sufficient detail to allow an item-by-item comparison with the Contract Documents.

2) Pump performance data and curves showing overall pump efficiencies, required net positive suction head (NPSH), allowable suction lift, flow rate, head, brake horsepower, motor horsepower, speed, and shut-off head. Curves shall range from minimum flow to shut-off head at full speed and for all speed curves specified. Curves shall indicate Preferred Operating Region (POR) and Allowable Operating Region (AOR), as defined in ANSI/HI 9.6.3.

c. Motor Data: Furnish certified motor data sheet for previously tested, electrically duplicate motor to that specified, including the following:

1) Speed-torque relationship.

2) Efficiency at 1/2, 3/4, and full load.

3) Power factor at 1/2, 3/4, and full load.

4) Slip at full load.

5) Running light, full load and locked rotor current.

6) Temperature rises and results of dielectric tests.

7) Bearing type and lubrication medium

8) Insulation class and temperature ratings.

d. Testing Plans, Procedures, and Testing Limitations:

1) Provide pump Supplier’s proposed shop testing plan, including complete list of testing facility limitations.

2) Provide proposed field-testing plan.

C. Informational Submittals:

1. Manufacturer Instructions:

a. Provide Supplier’s instructions for handling and installing products.

b. Setting drawings, templates, and directions for installing anchor bolts and other anchorages.

2. Source Quality Control Submittals:

a. Results of shop testing for complete pump and motor unit.

b. Location of nearest permanent service headquarters of pump manufacturer to the Site.

3. Field Quality Control Submittals:

    a. Results of field testing.

    b. Submit a written report of the results of each visit to Site by pump manufacturer's service representative, including purpose and time of visit, tasks performed, and results obtained.

1.04 CLOSEOUT SUBMITTALS

A. Submit warranty documentation in compliance with the Contract Documents.

B. Submit complete installation, operation, and maintenance manuals, including shop and field test reports, maintenance data and schedules, description of operation, and spare parts information. Operation and Maintenance (O&M) manuals shall be submitted in accordance with:

1. Section 01730, Operation and Maintenance Data.

2. Section 11000, Equipment - General.

3. Section 11100, Pumps - General.

1.05 WARRANTY

A. Warranty shall be as specified in Section 11000, Equipment - General with the exception that the warranty period shall be an extended to cover two (2) years.

1.06 OPERATING CONDITIONS AND PERFORMANCE REQUIREMENTS

A. Design criteria and performance requirements shall be as shown on the Drawings or specified elsewhere in the Contract Documents.

PART 2 – PRODUCTS

2.01 GENERAL

A. Comply with Section 11100, Pumps - General, except where superseded in this specification section.

B. Pump Type: Horizontal, non-clog, self-priming, centrifugal.

C. All equipment for the pumps, including motors and bases, shall be provided as a complete unit by the pump manufacturer.

D. All pumps for same pumping application shall be provided by one manufacturer.

E. Each pump shall be designed to retain adequate liquid in the pump casing to insure unattended, automatic repriming of the pump at its rated speed.

2.02 MANUFACTURERS

A. Pump Manufacturer:

1. Model Super T Series as manufactured by Gorman-Rupp Pumps.

2. Or approved equal.

2.03 ANCHORAGE

A. Contractor shall provide anchorage in accordance with Section 11000, Equipment - General and Section 11100, Pumps - General. Anchor quantity, spacing, size, length, and depth of embedment shall be according to manufacturer's recommendations.

2.04 MATERIALS OF CONSTRUCTION

Materials of Construction Schedule

Component	Materials of Construction
Pump Casing and Castings (Cover Plates and Seal Plate)	Cast Iron, ASTM A48, CL30
Shaft	ANSI 17-4PH stainless steel
Shaft Sleeve	Alloy Steel 4130
Wear Plate	Carbon Steel 1015, Carbon Steel 1026, or Cast Iron CL30
Flap Valve	Neoprene
Bearing Housing	Cast Iron, ASTM A48, CL30
Impeller	High chromium hard iron
Fasteners, Anchorage, and Hardware	Zinc plated steel
O-Rings and Gaskets	Nitrile (NBR) or Viton
Mechanical Seal Stationary and Rotating Members	Tungsten-Titanium Carbide Alloy

2.05 COMPONENTS

A. Casing

1. The openings and passages of the pump shall be large enough to permit the passage of a sphere of the specified diameter including any trash or stringy material.

2. The pump must be equipped with a removable suction inlet cover, allowing access to pump interior to permit the clearing of stoppages and to provide easy access for service and repairs without disturbing the suction or discharge piping.

3. Each pump shall incorporate a molded one-piece suction flap check valve that can be removed or installed through the removable cover plate opening, without disturbing the suction piping.

4. The pump casing and volute and all areas exposed to sewage shall contain no openings of a lesser diameter than the sphere size specified.

5. Screens or any internal devices that interfere with priming and performance of the pump will not be permitted.

6. An easily accessible tapped drain plug, minimum of 1 inch, shall be provided in the bottom of the casing to facilitate draining the pumps for maintenance purposes. The bearing cavity and the seal cavity shall have individual oil level sight gauges to monitor the level and condition of cavity oil.

B. Impeller

1. The impellers and wear plates shall have a minimum Brinell hardness of 360. Foundry certificates and results of Brinell hardness testing shall be submitted. Each individual impeller and wear plate casting shall be Brinell Tested to ASTM method E-10, reflecting a minimum 360 Brinell hardness.

2. Each casting shall be checked in a minimum of two places, in an area that is representative of casting thickness. Results of the Brinell test shall be certified by a Registered Professional Engineer and submitted for approval before final shipment.

C. The impeller shall be two-vaned, semi-open, non-clog, with integral pump out vanes on the back shroud.

D. The impeller shall thread onto the pump shaft and be secured with a sockethead self-locking capscrew and conical washer.

E. Means shall be provided for external adjustment of the clearance between the impeller and wear plate without requiring disassembly of the pump. Clearances shall be maintained by a four-point external shimless cover plate adjustment system, which utilizes a four collar and four adjusting screw design allowing for incremental adjustment of clearances by hand as required.

2.06 WEAR PLATE

A. The pump shall be fitted with a replaceable wear plate. Replacement of the wear plate, impeller, and seal shall be accomplished through the removable suction inlet cover without disturbing the pump volute or piping.

B. The entire rotating assembly, which includes bearings, shaft, seal, and impeller, shall be removable as a unit from the pump casing without disturbing the pump volute or piping. Openings into pump shall provide a line of sight for the adjustment of clearance for the wear plate and impeller.

C. The impeller shall be removable from both the front and rear of the pump casing without disturbing the pump volute or casing.

2.07 SHAFT AND BEARINGS

A. Pump shaft connections to drives shall be connected through a flexible coupling.

B. The shaft shall be contained within a bearing pedestal of ample size to contain roller-type radial and thrust ball bearings.

C. The bearings shall be oil lubricated. The bearing cavity shall be cooled by the pumped liquid.

2.08 MECHANICAL SEAL

A. The pump shaft shall be sealed against leakage by a dynamically balanced mechanical seal.

B. Both the stationary sealing member and mated rotating member’s surfaces must be ground and polished.

C. The stationary seal seat must be double floating and self-aligning during periods of shock loads that will cause deflection, vibration, and axial or radial movement of the pumps shaft.

D. The seal shall be installed within a separate oil-filled reservoir of the pump pedestal, the oil being both the lubricating and the cooling media.

E. Drain plug opening shall be provided to check oil for contamination in case of inner seal failure.

2.09 ACCESSORIES

A. Drain Kit

1. Each pumping unit shall be supplied with a drain kit for ease of maintenance. The kit shall contain a minimum of 10 feet of reinforced plastic hose with a female quick connect fitting at one end and factory installed drain fittings in each pump. Fittings shall include a pipe nipple, bushing, bronze ball valve and male quick connect fitting.

B. Automatic Air Release Valves

1. An automatic air release valve shall be furnished for each pump. Valves shall be designed to permit the escape of air to the atmosphere during initial priming or unattended re-priming cycles. Upon completion of the priming cycle or re-priming cycle, the valve shall close to prevent re-circulation. Valves shall provide visual indication of valve closure, and shall operate solely on discharge pressure. Valves, which require connection to the suction line, shall not be acceptable.

2. All valve parts exposed to sewage shall be constructed of stainless steel, or similar corrosion resistant materials. Diaphragms, if used, shall be of fabric-reinforced neoprene or similar inert material.

3. A cleanout port, three inches in diameter, shall be provided for ease of inspection, cleanout, and service.

4. Valves shall be field adjustable for varying discharge heads.

2.10 ELECTRICAL AND CONTROL REQUIREMENTS

A. Comply with Specification Section 11100, Pumps - General.

B. Motor power requirements shall be as indicated on the Drawings.

C. The pump motor shall be designed for operation with the voltage, frequency and phase electrical characteristics indicated in the Contract Documents. Motors shall be mounted on each pump and shall conform to the latest applicable NEMA, IEEE, and ANSI standards. The motors shall be rated for continuous duty with a minimum service factor as required by schedules herein.

D. Motors shall be provided with anti-condensation space heaters, motor winding temperature switches, and tropicalized windings unless otherwise specified.

2.11 CONTROLS

A. Refer to individual specifications and the Drawings.

2.12 SPARE PARTS

A. Spare parts shall be provided in accordance with Section 11000, Equipment - General and shall include the following for each pump.

Spare Parts Schedule

Component	Quantity
Complete mechanical shaft seal	1
Sets of gaskets and O ring seals	2

Component	Quantity
Replaceable wear plate	1

2.13 PAINT

A. Entire pump/motor assembly shall be shop finish coated with manufacturer's standard coating system. This paint system shall be appropriate for the application and shall provide corrosion and chemical protection.

2.14 EQUIPMENT IDENTIFICATION

A. Equipment nameplates shall comply with Section 11100, Pumps - General.

PART 3 – EXECUTION

3.01 SHOP TESTING

A. Shop testing shall be in accordance with Section 11000, Equipment - General Provisions and with the following additional requirements.

B. Hydrostatic Test

C. Performance Test

D. Impeller Hardness Test

E. Certified Reprime Test

1. The Contractor shall furnish a certified reprime test for a minimum of one pump for each pump model submitted. Each pump shall be capable of the reprime lift as listed below. Reprime lift shall be defined as the static height of the pump suction centerline above the liquid level that will prime utilizing the liquid remaining within the pump casing after a pumping cycle with the suction check valve removed. The reprime cycle, pump on to liquid discharge, shall be accomplished within five minutes, maximum.

2. Additional requirements are as follows:

    a. A ten-foot length of one-inch pipe shall be installed between the pump and the first bend of the discharge piping. This line shall be open to atmosphere to duplicate the action of an air release valve.

    b. Suction pipe configuration for the reprime test shall incorporate a minimum horizontal run of 2 feet and one 90 degree bend.

c. The impeller shall be set at the clearances recommended by the pump manufacturer.

d. Reprime lift repeatability shall be demonstrated by a minimum of five (5) sequential reprime cycles.

e. Liquid to be used in the reprime testing shall be water, free of debris.

3. Reprime performance test data shall be certified by the pump manufacturer and shall be submitted to the Engineer for approval prior to shipment.

3.02 SHIPMENT, DELIVERY, HANDLING AND STORAGE

A. Shipment, delivery, and handling of equipment and materials shall be in accordance with manufacturer's written instructions.

3.03 INSTALLATION

A. Install pump in strict accordance with manufacturer's recommendations and Section 11100, Pumps - General.

3.04 FIELD TESTING

A. Field testing shall be in accordance with Section 11000, Equipment – General and Section 11100, Pumps - General, and shall include:

Field Testing Schedule

Test	Requirement
Field Performance Testing	Yes
Vibration Testing	Yes
Natural Frequency "Bump" Test	Yes
Field Reprime Test	Yes

B. Field Reprime Test

1. Each pump shall be given a reprime test in the field. Each pump shall be tested three times, and the elapsed time required to achieve reprime shall be recorded for each test. The average time of the three tests shall be used. This average time must be less than or equal to the specified times. No external devices or vacuum assist units shall be used during reprime tests.

2. The test shall be conducted as follows:

a. Fill pump casing full of water.

b. Drain suction pipe.

c. Drain liquid level in pump casing to the cutwater tip.

d. Record time from instant starter energizes until pump comes to full prime and is pumping at full rated capacity against the specified head. Suction and discharge gauges shall be attached to the pump during the test to confirm when full prime is reached.

e. The reprime test shall also be readministered as above, but rather than drain the pump casing to the cutwater tip, the suction check valve shall be removed and the pump brought to prime. Once the pump is pumping at its fully rated capacity the pump shall be shut off. The air valve on the discharge piping shall be opened to assist in draining of the suction leg. The suction leg will drain and a natural siphonage shall occur from the pump casing. The time required for each pump to reprime under this condition shall be recorded. The average time of three tests shall be used.

3. Should the proposed equipment fail to meet the specified performance criteria or fail to reprime within the specified time, the equipment will be rejected. The pump manufacturer shall have seven (7) days to correct any deficiencies prior to a retest. The retest shall be identical to the first test. Should equipment fail to perform as specified during the retest, the Engineer shall direct the equipment be removed from the jobsite and an equipment offering which will perform as specified shall be provided.

3.05 MANUFACTURER'S FIELD SERVICES

A. The services of a qualified manufacturer's technical representative shall be provided in accordance with Section 11000, Equipment - General. Field services shall include the following site visits:

Service	Number of Trips	Number of Days/Trip
Installation and Testing	1	1
Startup and Training	1	1
Services after Startup	1	1

[END OF SECTION]

SECTION 11130

SUBMERSIBLE SOLIDS-HANDLING PUMPS

PART 1 – GENERAL

1.01 THE REQUIREMENT

A. The Contractor shall furnish, install, and place into satisfactory operation submersible, non-clog, solids-handling, end suction centrifugal pumps at the locations shown on the Drawings and as specified herein. All pumps specified herein shall be supplied by the same manufacturer.

B. Equipment shall be provided in accordance with the requirements of Section 11100, Pumps - General.

C. The pump and all related equipment shall be designed for the wastewater applications specified herein and shall be suitable for continuous or intermittent operation. The pump shall be bottom suction, side discharge construction and shall be supplied with a discharge connection elbow and integral sliding rail removal system of the pump manufacturer's design matched to the pumps being supplied.

1.02 REFERENCE SPECIFICATIONS, CODES AND STANDARDS

A. Comply with Section 11000, Equipment - General.

B. Comply with Section 11100, Pumps - General.

1.03 ACTION/INFORMATIONAL SUBMITTALS

A. Provide submittals identified in Section 11000, Equipment - General and Section 11100, Pumps - General in addition to the submittals identified herein.

B. Action Submittals: Submit the following:

1. Shop Drawings:

    a. Fabrication, assembly, installation, and wiring diagrams.

    b. Product Data:

        1) Manufacturer’s literature, illustrations, specifications, paint certification (if required) and engineering data including; dimensions, materials, size, weight of pumping assembly, and part lists for all components in sufficient detail to allow an item-by-item comparison with the Contract Documents.

2) Pump performance data and curves showing overall pump efficiencies, required net positive suction head (NPSH), flow rate, head, brake horsepower, motor horsepower, speed, and shut-off head. Curves shall range from minimum flow to shut-off head at full speed and for all speed curves specified. Curves shall indicate Best Efficiency Point (BEP), Preferred Operating Region (POR), and Allowable Operating Region (AOR), as defined in ANSI/HI 9.6.3.

3) Minimum pump submergence.

c. Motor Data: Furnish certified motor data sheet for previously tested, electrically duplicate motor to that specified, including the following:

1) Speed-torque relationship.

2) Efficiency at 1/2, 3/4, and full load.

3) Power factor at 1/2, 3/4, and full load.

4) Slip at full load.

5) Running light, full load and locked rotor current.

6) Temperature rises and results of dielectric tests.

7) Bearing type and lubrication medium

8) Insulation class and temperature ratings.

d. Testing Plans, Procedures, and Testing Limitations:

1) Provide pump Supplier’s proposed shop testing plan, including complete list of testing facility limitations.

2) Provide proposed field-testing plan.

C. Informational Submittals:

1. Manufacturer Instructions:

a. Provide Supplier’s instructions for handling and installing products.

b. Setting drawings, templates, and directions for installing anchor bolts and other anchorages.

2. Source Quality Control Submittals:

a. Results of shop testing.

b. Location of nearest permanent service headquarters of pump manufacturer to the Site.

3. Field Quality Control Submittals:

a. Results of field testing.

b. Submit a written report of the results of each visit to Site by pump manufacturer's service representative, including purpose and time of visit, tasks performed, and results obtained.

1.04 CLOSEOUT SUBMITTALS

A. Submit warranty documentation in compliance with the Contract Documents.

B. Submit complete installation, operation, and maintenance manuals, including shop and field test reports, maintenance data and schedules, description of operation, and spare parts information. Operation and Maintenance (O&M) manuals shall be submitted in accordance with:

1. Section 01730, Operation and Maintenance Data.

2. Section 11000, Equipment - General.

3. Section 11100, Pumps - General.

1.05 WARRANTY

A. Warranty shall be as specified in Section 11000, Equipment - General with the exception that the warranty period shall be an extended to cover two (2) years.

1.06 OPERATING CONDITIONS AND PERFORMANCE REQUIREMENTS

A. Design criteria and performance requirements shall be as shown on the Drawings or specified elsewhere in the Contract Documents.

PART 2 – PRODUCTS

2.01 GENERAL

A. Comply with Section 11100, Pumps - General, except where superseded in this specification section.

B. Pump Type: Non-clog, submersible, centrifugal pump.

C. All equipment for the pumps, including motors and bases, shall be provided as a complete unit by the pump manufacturer.

D. All pumps for same pumping application shall be provided by one manufacturer.

2.02 MANUFACTURERS

A. Pump Manufacturer:

1. Xylem/Flygt N3000 series.

2. No equal.

2.03 ANCHORAGE

A. Contractor shall provide anchorage in accordance with Section 11000, Equipment - General and Section 11100, Pumps - General. Anchor quantity, spacing, size, length, and depth of embedment shall be according to manufacturer's recommendations.

2.04 MATERIALS OF CONSTRUCTION

Materials of Construction Schedule

Component	Materials of Construction
Pump Housing and Castings	Cast Iron, ASTM A48, CL35B
Shaft	AISI 400 Series Stainless Steel
Impeller and Insert Ring	A532 Class III Type A (25% Chromium) hard iron alloy (Ni-hard)
Fasteners, Anchorage, and Hardware	AISI Type 316L SS
O-Rings	Nitrile (NBR)
Foot mounted discharge connection elbow	Cast Iron, ASTM A48, CL35B or Ductile Iron ASTM A536
Guide Rails and Brackets	Sch. 40 Type 316 Stainless Steel

2.05 COMPONENTS

A. Impeller

1. Impeller Type: One-piece, single-suction, non-clogging, multiple-vane, solids-handling, mixed flow type.

2. The impeller blades shall be self-cleaning upon each rotation as they pass across a sharp relief groove in the Insert ring and shall keep the impeller blades clear of debris. The clearance between the insert ring and the impeller leading edges shall be adjustable.

3. Impeller Construction:

a. Solids Passage:

1) Shall be designed with smooth flow passages to pass a spherical solid of the specified size and to prevent clogging by stringy materials.

2) Impeller shall handle: solids of the specified sphere size, fibrous materials, heavy sludge, and other matter found in normal wastewater applications.

b. The impeller shall be bolted, keyed and locked to the pump shaft at the factory. Adhesive or friction type fits are not acceptable.

4. Impeller Balancing: Dynamically balanced.

B. Casing/Volute

1. Casing/Volute Type:

a. End suction, side discharge construction type having sufficient strength and thickness to withstand all stress and strain from service at full operating pressure and load.

2. Casing/Volute Construction:

a. The volute shall be single piece construction.

b. Pump casing shall be designed with a pullout assembly so that the impeller can be withdrawn. The complete rotating assembly shall be capable of being removed from the volute without disturbing the suction piping, discharge piping, or volute.

c. Casing shall be equipped with removable suction cover which can be removed for access to the impeller.

d. All non-stainless steel metal surfaces coming in contact with the pumped media shall be protected by a factory applied protective coating.

e. Pump shall not bear on wet well floor when pump to base elbow connection is engaged.

3. Solids Passage:

a. Passages shall have smooth unobstructed passages for solids. Volute shall have smooth fluid passages large enough at all points to pass any size solids which can pass through the impeller.

b. Passage Size: Large enough to pass a 3-inch spherical solid.

c. Cleanouts:

1) Pump volute shall be provided with a cleanout port to allow for removal of any foreign material blocking or impeding performance of the pump.

2) Provide cleanout handhole near cutwater.

3) Cleanout cover shall be removable.

4) The inner contours of the handhole cover shall match the contours of the casing in which it fits.

d. Flanges: Integrally cast ANSI Standard flat faced flange with 125-lb drilling.

4. Lifting: Casing/Volute shall be provided with lifting bolts and eye lugs for installation and maintenance of the pumps.

C. Shaft

1. Diameter: Shall be sufficiently large in diameter to safely transmit the maximum torque developed by the drive unit and of such design as to provide a rigid support for the impeller and to prevent excessive vibration.

2. Construction: The shaft shall be heat treated, turned, ground, and polished over its entire length.

D. Bearing Housing & Bearings

1. Type: Permanently lubricated, heavy-duty, upper radial and lower thrust anti-friction ball or tapered roller bearings.

2. Minimum AFBMA L-10 Bearing Life (at all points along the usable portion of the pump curve at maximum pump speed) shall be 50,000 hours

3. Construction:

a. Bearing housing shall fully enclose the bearings to prevent entrance of contaminants and shall be designed to provide for axial adjustment of rotating assembly.

b. Bearing housing shall be designed with a machined self-centering fit with the stuffing box cover.

c. Bearing Lubrication: Bearings shall be permanently lubricated.

E. Sealing of Mating Surfaces:

1. All mating surfaces where watertight sealing is required shall be machined and fitted with O-rings.

2. Fitting shall be such that sealing is accomplished by metal-to-metal contact between machined surfaces. This will result in controlled compression of the O-rings without the requirement of a specific torque limit.

3. Secondary sealing compounds, rectangular gaskets, elliptical O-rings, grease or other devices shall not be acceptable.

F. Discharge Base Elbow and Lifting System:

1. Provide permanently installed slide rail mounting systems for each pump as shown on the Drawings and as specified herein.

2. Slide rail system shall facilitate pump removal from the wet pit for inspection or service without entering the pit or disconnecting piping.

3. The pump shall be provided with a base discharge connection elbow permanently installed in the wet well along with the discharge piping.

4. The discharge connection elbow shall be constructed with a 125 lb. ANSI standard flat faced flange.

5. The base discharge connection elbow shall be mounted either directly to the concrete or onto a baseplate as indicated on the Drawings.

6. The pump shall be automatically connected to the discharge connection elbow when lowered into place and shall be easily removed for inspection or service. Sealing of the pumping unit to the discharge connection elbow shall be accomplished by a simple downward motion of the pump.

7. A sliding guide bracket shall be an integral part of the pump unit. The entire weight of the pump unit shall be guided by the guide bar(s) and pressed tightly against the discharge connection elbow to provide positive sealing under all conditions.

8. The entire sliding rail system shall be designed to safely withstand all stresses imposed thereon by vibration, torque, shock and all possible direct and eccentric loads. No portion of the pump shall bear directly on the floor of the sump.

9. Lower guide bar holders shall be integral with the discharge connection. Guide bars shall be at a minimum Schedule 40, 316 stainless steel pipe of a conservative size that is at least one diameter oversized and adequate for its intended use. The guide bars shall not support any portion of the weight of the pump.

10. Provide upper and intermediate guide brackets, as required and where indicated on the Drawings.

11. All metal-to-metal interfaces where movement might occur shall be non-sparking. The slide mounting system for the influent pumps shall meet or exceed

Underwriters Laboratory requirements for operation in a Class I, Division 1, Group D hazardous location.

2.06 STRUCTURAL STEEL

A. Comply with Section 11100, Pumps - General.

2.07 DISSIMILAR METALS

A. Comply with Section 11100, Pumps - General.

2.08 SHAFT SEALS

A. Shaft Seals: Shaft sealing shall be accomplished by the following method as identified in the schedule below.

1. Mechanical seals shall run in an oil-filled chamber to provide constant lubrication. The lubricant chamber shall be designed to prevent overfilling and to provide lubricant expansion capacity. The drain and inspection plug, with positive anti-leak seal shall be easily accessible from the outside. The seal system shall not rely upon the pumped media for lubrication.

2. The lower, primary seal unit, located between the pump and the lubricant chamber shall contain one stationary and one positively driven rotating, industrial duty, corrosion resistant, seal rings. The lower seal shall be independent of the impeller hub.

3. The upper, secondary seal unit, located between the lubricant chamber and the motor housing, chamber shall contain one stationary and one positively driven rotating, industrial duty, corrosion resistant, seal rings.

4. Each seal interface shall be held in contact by its own spring system. The seals shall require neither maintenance nor adjustment and shall be capable of operating in either clockwise or counter-clockwise direction of rotation without damage or loss of seal. The seal system shall not be damaged when run dry. No external source of seal cooling or lubrication water shall be required.

5. The following seal types shall not be considered acceptable nor equal to the dual independent seal specified: shaft seals without positively driven rotating members, or conventional double mechanical seals containing either a common single or double spring acting between the upper and lower seal faces. Cartridge type systems will not be acceptable. No system requiring a pressure differential to offset pressure and to effect sealing shall be used.

B. Shaft Seal

Shaft Seal Schedule

Parameter	Value
Shaft Sealing Arrangement	Tandem Mechanical Component Seal
Seal Flush Source / API Flush Plan	None
Lower Seal Unit – Seal Face Material	Tungsten Carbide
Upper Seal Unit - Seal Face Material	Tungsten Carbide
Metallic Components	316 Stainless Steel
Flexible Components	Nitrile

2.09 ACCESSORIES

A. All anchor bolts, lifting bolts, eye lugs, etc. necessary for complete installation and maintenance of the pump shall be constructed of Type 316 stainless steel and shall be adequately designed for its intended use.

B. Lifting Bail

1. Provide a type 316 stainless steel pump lifting bail for each pump.

2.10 ELECTRICAL REQUIREMENTS

A. Comply with Specification Section 11100, Pumps - General.

B. The stator, rotor and bearings shall be mounted in a sealed submersible type housing.

C. Motor shall be provided with motor winding temperature sensors.

D. The pump and motor shall be specifically designed so that they may be operated partially or completely submerged in the liquid being pumped. The pump shall not require cooling water jackets.

E. Stators shall be securely held in place via a heat shrink fit.

F. Electrical service and motor power requirements shall be as indicated on the Drawings. Electrical service options include 460V/3 ph/60 Hz, 230V/3ph/60 Hz, and 230V/1 ph/60 Hz. Provide VFD as required to convert single phase power to three phase.

G. The pump motor shall be designed for operation with the voltage, frequency and phase electrical characteristics indicated on the Drawings and specified herein. Motors shall be mounted on each pump and shall conform to the latest applicable NEMA, IEEE, and ANSI standards for submersible service. The motors shall be rated for continuous duty with a minimum service factor as required by schedules herein.

H. Type: Squirrel-cage induction, housed in a watertight chamber.

I. The stator winding and stator leads shall be moisture resistant.

J. Motor Insulation: Motor insulation shall be as scheduled herein.

K. The use of bolts, pins, or other fastening devices requiring penetration of the stator housing shall not be allowed.

L. Starts Per Hour: The motor shall be guaranteed for continuous unsubmerged duty, capable of sustaining a minimum scheduled starts per hour without overheating.

M. Motor Bearings: The motor shall be provided with pre lubricated radial and thrust bearings which are designed to carry the entire load which may be imposed upon it under all operating conditions.

N. All motors shall be housed in enclosures specifically designed for submersible pump application.

Motor Criteria Schedule

Parameter	Value
Enclosure	TEXP
Insulation	Class H
Design	NEMA B
Minimum Service Factor	1.15
Motor Winding Temperature Protection	Temperature Switches
Rated Starts Per Hour, Minimum	15

O. Cable Entry Water Seal:

1. The cable entry water seal design shall insure a watertight and submersible seal without specific torque requirements.

2. Each pump shall be equipped with separate terminal board that totally isolates the incoming power supply from the pump motor.

2.11 PROTECTIVE DEVICES

A. Pump shall be supplied with a moisture/seal fail and over-temperature protective relay device. Device shall be provided to panel fabricator loose for installation within the pump control panel.

2.12 PUMP CABLE:

A. Cable Length:

1. Power and control cables between the pumps and the control panel shall be provided by the pump manufacturer. The Contractor, in coordination with the pump manufacturer, shall determine the required cable length. Provide sufficient spool to accommodate pump removal.

2. All pumps for the same application shall be provided with the same length of cable.

3. No splices shall be allowed unless specifically called for in the electrical drawings.

B. Pump Cable Materials: PVC or oil resistant chloroprene rubber jacketed type SPC cable suitable for submersible pump applications.

C. Sizing:

1. In Accordance with NEC and ICEA standards.

2. Cables shall be UL approved.

D. PVC strain relief connectors shall be furnished for all cables.

2.13 CONTROLS

A. Refer to individual specifications and the Drawings.

2.14 SPARE PARTS

A. Spare parts shall be provided in accordance with Section 11000, Equipment - General and shall include the following for each series of pumps.

Spare Parts Schedule

Component	Quantity
Sets of gaskets and O ring seals	2

2.15 PAINT

A. Entire pump/motor assembly, including the base elbow connection, shall be shop finish coated with manufacturer's standard coating system. This paint system shall be appropriate for a raw wastewater application and shall provide corrosion and chemical protection.

2.16 EQUIPMENT IDENTIFICATION

A. Equipment nameplates shall comply with Section 11100, Pumps - General.

PART 3 – EXECUTION

3.01 SHOP TESTING

A. Factory testing will not be required. However, the pump manufacturer shall guarantee performance under the rated operating condition.

1. Impeller, motor rating and electrical connections shall be checked.

3.02 SHIPMENT, DELIVERY, HANDLING AND STORAGE

A. Shipment, delivery, and handling of equipment and materials shall be in accordance with manufacturer's written instructions.

3.03 MANUFACTURER'S FIELD SERVICES

A. The services of a qualified manufacturer's technical representative shall be provided in accordance with Section 11100, Pumps - General. Field services shall include the following site visits, as a minimum:

Site Visits Schedule

Service	Number of Trips	Number of Days/Trip
Installation and Testing	1	1
Startup and Training	1	1
Services after Startup	1	1

3.04 INSTALLATION

A. Install pump in strict accordance with manufacturer's recommendations and Section 11100, Pumps - General.

3.05 FIELD TESTING

A. Field testing shall be in accordance with Section 11100, Pumps - General, and shall include:

Field Testing Schedule

Test	Requirement
Field Performance Testing	Yes
Vibration Testing	No
Natural Frequency “Bump” Test	No

[END OF SECTION]

SECTION 11170

LIQUID CHEMICAL METERING PUMP SKID

PART 1 – GENERAL

1.01 THE REQUIREMENT

A. Contractor shall furnish and install chemical metering pumps at the locations shown on the Drawings and as specified herein. All pumps shall be supplied by the same manufacturer.

B. Equipment shall be provided in accordance with the requirements of Section 11000, Equipment - General and Section 11100, Pumps - General.

1.02 OPERATING CONDITIONS AND PERFORMANCE REQUIREMENTS

A. Chemical Properties

1. Pumps and components shall be constructed of materials compatible with the specific chemical's physical properties.

B. Pump Performance Requirements

1. Design criteria and performance requirements shall be as specified under the individual specifications or shown on the Drawings.

2. Application points shall be as indicated on the Drawings.

1.03 SUBMITTALS

A. The following items shall be submitted with the Shop Drawings in accordance with, or in addition to the submittal requirements of the Contract Documents; and Section 11000, Equipment - General:

1. Performance Affidavit.

2. Submit pump manufacturer's hydraulic calculations.

3. Shop drawings shall include all pumps and accessories and shall be submitted as a complete system. Partial submittals will be unacceptable.

4. Certification of factory testing.

5. Certification of final acceptance testing.

B. Warranty

1. Provided extended warranty period of two (2) years.

PART 2 – PRODUCTS

2.01 MANUFACTURERS

A. The Manufacturer shall be a company specializing in manufacture, assembly, and field performance of mechanical metering pumps with a minimum of five years of experience.

B. The metering pumps shall be:

1. Sigma Series pumps as manufactured by Prominent Fluid Controls, Inc.

2. Equivalent by Wallace and Tiernan.

3. Equivalent by Pulsafeeder.

4. Or approved equal.

2.02 MECHANICALLY OPERATED METERING PUMPS

A. Motor operated chemical metering pumps shall be of the positive displacement, mechanical diaphragm type. The stroke frequency adjust mechanism, driven by a direct coupled, variable speed motor, shall actuate a convex-shaped, teflon-faced composite diaphragm. Solenoid driven pumps will not be accepted.

B. The manufacturer is responsible for the coordination of corrosion resistant materials for the chemical solution(s) specified. The manufacturer shall include all features as necessary for satisfactory operation of the pumping systems for chemical solutions specified. Pumps shall perform satisfactorily over the full range of solution concentrations specified. Pumps, motors and accessories shall be constructed of appropriately resistant material for the ~~coated with a heavy-duty protective epoxy coating resistant to the~~ specified chemical to prevent corrosion.

C. The metering pumps shall be provided with an oil-lubricated gear reducer and cam-and-spring drive mounted in an aluminum housing. The housing shall be sealed into an outer plastic housing for corrosion protection with heat sink fins for cooling.

D. The liquid ends shall include ~~cartridge-type~~union or threaded type ball check valves. ~~Conventional threaded valves will not be allowed.~~ Valve service or removal shall not require any disturbances to the pump head pipeworks.

E. The liquid end shall be physically separated from the drive unit by a back plate with weep hole creating an air gap. An elastomer shaft wiper seal shall prevent contamination of the gear box if the primary diaphragm fails.

~~F. The pump and motor shall be mounted on a common concrete base as indicated on the Drawings. The motor shall be direct coupled to the gear box.~~

~~G.~~F. Each pump and motor shall have a corrosion resistant nameplate giving the manufacturer's model, serial number, rating, range, speed, and other pertinent data.

~~H.~~G. Acceptable materials of construction shall be as follows, provided that each is chemically compatible. Lower quality materials of construction will not be accepted. More robust materials of construction shall be provided as required to provide excellent resistance to the specific chemical.

Component	Material of Construction
Diaphragm	PTFE faced EPDM with Steel Core
Housing Material	Glass-filled Luranyl
Liquid End Material	Kynar
Ball Check Valve	PVDF with PTFE ~~faced Viton Gasket~~ Seals
Ball Check Valve Balls	Ceramic
O-Ring Seals	Teflon (PCTFE), Viton
Hardware	Hastelloy C

2.03 ELECTRICAL AND CONTROLS REQUIREMENTS

A. Metering pump controls shall be microprocessor-based and shall be capable of remote analog operation. The pump shall accept a remote analog signal such that stroke frequency is proportional to a 4-20 mA signal. A dry contact closure to the “pause” control function shall cause pump to halt operation and illuminate an indicator light on the pump control panel, in either manual or external pacing mode. The pump shall allow setting of a maximum stroke rate which corresponds to the maximum analog signal. Analog-to-digital converters external to the pump shall not be allowed. Local operator controls on the pump shall include stroke length control knob, stroke frequency control knob stroke frequency control up/down keys, program selection key, start/stop key, an LCD display, and indicating lights for fault annunciation. In addition to the analog control capability an SPDT relay output shall be provided for fault indication such as power supply failure, or loss of pacing signal.

B. Local adjustments and settings of the stroke length and stroke frequency shall be achieved when the metering pump control is put in “manual” operation. Feed rate shall be controlled manually via a stroke length control adjuster. A percent scale and vernier shall indicate stroke length in 1% increments. Feed rate shall be infinitely adjustable from 0 through 100%. Repeatable metering accuracy shall be ± 2% of full scale, at constant hydraulic conditions, over the operating range.

C. Suction and discharge stroke length and duration shall be adjustable to optimize dosing application of required chemical.

~~C.~~D. The electronic control system of the metering pump shall be continuously self-monitoring. In the event of a system error in the microprocessor, the pump shall switch off and an alarm shall be annunciated.

2.04 METERING PUMP SKID

A. Each pump shall have the ability to function as an isolated pump (i.e., independent of piping and operation of the other pump mounted on the skid assembly). Selection for use of backup pump shall require manual manipulation of valves and controls at the skid.

B. The chemical feed skid system shall be assembled by the metering pump manufacturer. The chemical feed skid system shall be completely assembled, mounted, calibrated, tested, and delivered to the site on a single skid. Skid assembly shall contain chemical metering pumps, all necessary piping, valves, fittings, supports, electrical controls, and accessories as specified herein. The metering pump skid shall contain the following items:

1. Skid
2. Metering pumps and motors
3. Calibration columns
4. Pulsation dampeners
5. Pressure gauges with diaphragm seals
6. Isolation valves
7. Pressure relief valves
8. Backpressure valve
9. Wye strainer(s)
10. Skid mounted controls
11. All piping, valves, gaskets, supports, hardware, wiring, junction boxes, and accessories necessary for a fully functioning skid. Piping shall be terminated within 2 inches from the edge of skid. Provide flanges at all piping connections leaving the skid for any pipes > 1/2” and unions for any pipes ≤ 1/2”. Electrical cables to the skid shall terminate in the skid-mounted control panel.

C. All components of the chemical metering system shall be contained within the skid. Skids shall be floor mounted units with bottom, back, and sides of the skid frame constructed from black UV-protected, fusion-welded, high-density polyethylene of a minimum thickness suitable to rigidly support the weight of the equipment and the

chemical metered without warping or bending of any kind. Bolted construction for the frame is not acceptable.

D. The ~~top and~~ front of the skid shall be constructed of clear plastic material provided as a spray shield. F~~Top shall be removeable and f~~ront shall be provided with hinged doors for full access to the skid interior with all piping and equipment able to be easily serviced with the doors open and/or top removed. All fasteners and hardware shall be non-metallic and of suitable strength and thickness to be of solid, rigid construction.

E. Pedestals shall be provided to elevate the metering pumps above the skid base and all piping and components shall be supported to prevent them from resting on the skid deck. The skid shall incorporate a drip lip with two (2) 1/2" NPT connections for containment drain piping. Skid shall be constructed with forklift truck cut-outs and anchor bolt holes for installation. Skid shall be suitable for outdoor installations.

F. ~~The wetted end of each pump shall be oriented at the open end of the framework for easy access.~~ All pumps shall be arranged with the ~~pump wet end~~ operator interface and stroke length adjustment facing the open end of the feed system. ~~Where~~ L~~l~~ocal control panels shaw~~i~~ll be located on the skid~~, all panels shall be~~ and mounted on the side ~~so that the control interface faces the top or front open end~~ of the skid.

G. All components of the skid mounted system (pumps, piping and controls) shall be factory pressure tested with water prior to shipment. Certification of factory testing shall be submitted to the Engineer and included in the Operations and Maintenance Manuals.

H. All metering pump accessories shall have pressure ratings equal to or greater than the discharge pressure of the associated metering pumps.

I. All wiring within the skid boundaries shall be performed by the chemical feed system fabricator prior to shipping and shall terminate at the skid-mounted control panel.

2.05 METERING PUMP ACCESSORIES

A. The metering pump supplier shall furnish accessory equipment as specified herein and as shown on the Drawings including but not limited to the following:

1. Pressure Gauges

a. Gauges shall be provided on the discharge of metering pump skid and on each pulsation dampener.

b. Gauges shall be PVC housing, nominally 2.5” in diameter.

c. Each gauge shall have a pressure range, in psi, suitable to allow the normal pumping pressure to be near the mid-span of the range.

d. Each gauge shall be provided with a diaphragm seal constructed of materials which are completely resistant to corrosion by the by the pumped chemical.

e. Each pressure gauge shall also be provided with an isolation valve. Isolation valves shall be PVC with seals that are resistant to the chemical applications.

B. Pressure Relief Valves

1. Sizing of the valves shall be the responsibility of the manufacturer.

2. Pressure relief valves shall be provided in the discharge piping of each metering pump, prior to any valves, to eliminate the buildup of excess pressure in the system. Valves shall be completely resistant to the chemicals for which they are provided.

3. The pressure relief valves shall be fully adjustable.

4. Relief vents shall be piped to the suction side of the associated pump.

C. Antisiphon/Back-pressure Valves

1. Sizing of the valves shall be the responsibility of the manufacturer.

2. Back pressure/anti-siphon valves shall be provided in the discharge pipes of the skid to provide constant back pressure at the chemical metering pump discharge and eliminate siphoning.

3. Valves shall be completely resistant to the chemicals for which they are provided.

4. The back pressure valve shall be fully adjustable.

D. Pulsation Dampeners

1. Diaphragm and body materials and configuration shall be supplied for the specific chemical for which the dampener is used without corrosion, wear, or other cause of abnormally short life.

2. Each dampener shall be equipped with a charging valve and gas pad pressure gauge.

3. Pulsation dampeners shall be sized appropriately for each pump to remove a minimum of 95% of the pulsations. Sizing of the pulsation dampeners shall be the responsibility of the manufacturer, and calculations shall be submitted with Shop Drawings.

4. Pulsation dampeners shall be of the single diaphragm design, capable of arresting water hammer in the pump discharge lines created by the metering pumps.

5. Pulsation dampeners shall be provided with valves, gauges and fittings necessary for maintaining required air pressure in the air chamber.

6. Materials of construction of diaphragm shall be EPDM and body shall be PVC. All materials shall be corrosion resistant to the chemical fluid pumped.

7. Provide one dampener on the discharge side of each metering pump, located 12" or closer to the pump discharge.

8. Each pulsation dampener shall include an integral pressure gauge.

9. Provide each pulsation dampener with an isolation valve.

E. Calibration Column

1. Calibration columns shall be constructed of transparent PVC and shall be provided with threaded ends. Each calibration column shall be sized such that at 50% pump capacity, the calibration column will be emptied in 60 to 90 seconds.

2. Graduations shall be in mL and gallons. The scale shall also include direct readings in GPH to circumvent the need for calculations.

3. The calibration chamber shall be piped and valved so that each pump shall be able to utilize the calibration chamber without interfering with the operation of the other pump. The top of the chamber shall be piped to a common vent on the skid.

F. Piping, Tubing, Valves, and Appurtenances

1. Provide hard piping on the suction and discharge of each metering pump. Materials of construction shall be completely compatible with the specified chemical.

~~2. Provide flexible piping connection and quick connects or unions with flanges between fixed piping and suction and discharge of the pump in order to allow removal of the pump without disturbing the suction or discharge piping. Flexible tubing shall be as follows:~~

~~a. If chemically compatible, provide Class 125 Nexbraid clear braided PVC tubing by Nexgen Hose, Inc. or approved equal.~~

~~b. If PVC tubing is not chemically compatible, provide Teflon hose with Hastelloy C overbraid protection and permanently attached Hastelloy C true union end fittings as manufactured by Resistoflex Company, Marion, NC, or approved equal.~~

~~3.~~2. Isolation valves shall be provided at all equipment connections. Seals shall be compatible with the chemical being pumped. Isolation valves shall be true-union ball valves.

~~4.~~3. Feed system piping shall include an air bleed/flush connection on the suction and discharge of each pump. The bleed/flush connections should be located on the interior of the pump isolation valves to allow for all lines to be purged of air and to allow the pump to be flushed prior to maintenance being performed.

~~5.~~4. All piping and accessory support shall be from the skid base or rear panel. Piping and accessory support from above is not acceptable.

~~6.~~5. All piping and accessories shall be securely fastened to the frame or supported with stand-offs. The use of steel or metal bands or strapping shall not be acceptable.

~~7.~~6. Provide transition fittings for connection of dissimilar materials or provide metering pump accessories manufactured of the same material as the piping.

~~8.~~7. No threaded piping will be allowed on the skids.

2.06 TOOLS, SUPPLIES, AND SPARE PARTS

A. The equipment manufacturer shall furnish all special tools necessary to disassemble, service, repair, and adjust the equipment.

B. The manufacturer shall furnish a list of recommended spare parts.

C. In addition to any other spare parts recommended by the pump manufacturer or skid Supplier, furnish the following spare parts:

1. Two (2) spare pressure gauges with diaphragm seals.

2. One (1) spare pressure relief valve.

3. One (1) spare back pressure valve.

4. One (1) spare pulsation dampener.

5. Two (2) preventive maintenance kits including all components required to rebuild pump head.

PART 3 – EXECUTION

3.01 MANUFACTURER'S FIELD SERVICES

A. The services of a qualified manufacturer's technical representative shall be provided as follows:

Service	Number of Trips	Number of Days/Trip
Installation Supervision and Testing	1	1
Startup and Training	2~~1~~	1

B. Manufacturer's technical representative shall perform the tasks as follows for each set of metering pumps:

1. Witness and check installation.

2. Assist the Contractor in conducting field tests and preparing a written report as specified below.

3. Provide all necessary field adjustments of pressure settings for the pressure relieve valves and backpressure valves.

4. Witness and check start-up of the system.

5. Assist Contractor in making adjustments and modifications as necessary to optimize operation of the system components and to minimize surge pressures.

6. Troubleshoot and correct any mechanical or control problems with the metering pumps and accessories that are noted during tests and start-up.

7. Submit written certification that the system has been properly installed, tested, and adjusted; that the system operates as specified or as required; and that all controls and protective devices operate properly. Indicate date of final acceptance test, as well as a listing of all persons present during the tests.

8. Instruct Owner in the operation and maintenance of equipment.

C. The Contractor shall be fully informed and shall be responsible to ensure that all Contractor's employees, agents, and/or subcontractors are fully informed as to the hazards and proper procedures associated with working with and around the specified chemicals.

3.02 INSTALLATION

A. The Contractor shall furnish and install the metering pumps and all associated equipment and accessories as required and specified herein in accordance with manufacturer's instructions, Section 11000, Equipment - General, and the Drawings.

B. All metallic fasteners, brackets, mounting hardware, and accessories located in the storage and feed areas shall be constructed of materials completely resistant to the specified chemicals.

C. The Contractor shall support piping adjacent to pumps such that no weight is carried on pump casings.

3.03 TESTING, CLEANING, AND START UP

A. All pumps shall be shop tested for capacity at rated pressure prior to shipment, with documented results provided.

B. The Contractor shall demonstrate to the Engineer that the completed systems meet the functional requirements intended and that all components of the system are properly calibrated.

C. After installation of piping and accessories but before connection of piping to the storage tank and pumps the Contractor shall completely flush the system to clean and remove all foreign matter from the piping system.

D. After piping system is cleaned, perform complete system hydrostatic tests and operational tests using potable water. The Contractor shall check the functioning of all pump accessories, valves, and feed points and shall repair or replace all malfunctioning or unsatisfactory components. The Contractor shall repair all leaking joints and components identified during the test and through the guarantee period.

E. Prior to placing the required chemicals in any equipment, each component shall be blow dried to remove all moisture and any other material that could contaminate the chemicals to be used.

F. Contractor shall demonstrate and document the accuracy of each pump using project-supplied calibration chamber.

[END OF SECTION]

SECTION 15000

BASIC MECHANICAL REQUIREMENTS

PART 1 – GENERAL

1.01 THE REQUIREMENT

A. The Contractor shall furnish and install to the required line and grade, all piping together with all fittings and appurtenances, required for a complete installation. Piping to be backfilled and/or encased in concrete is considered to be buried piping. Piping that is not buried is considered to be exposed.

B. The Contractor shall furnish and install fittings, couplings, connections, sleeves, adapters, harness rods and closure pieces as required to connect pipelines of dissimilar materials and/or sizes herein included under this Section and other concurrent Contracts for a complete installation.

C. The Contractor shall furnish all labor, materials, equipment, tools, and services required for the furnishing, installation and testing of all piping as shown on the Drawings, specified in this Section, and required for the Work. Piping shall be furnished and installed of the material, sizes, classes, and at the locations shown on the Drawings and/or designated in this Section. Piping shall include all fittings, adapter pieces, couplings, closure pieces, harnessing rods, hardware, bolts, gaskets, wall sleeves, wall pipes, hangers, supports, and other associated appurtenances for required connections to equipment, valves, or structures for a complete installation.

D. Piping assemblies under 4-inch size shall be generally supported on walls and ceilings, unless otherwise shown on the Drawings or ordered by the Engineer, being kept clear of openings and positioned above "headroom" space. Where practical, such piping shall be run in neat clusters, plumb and level along walls, and parallel to overhead beams.

E. The Contractor shall provide taps on piping where required or shown on the Drawings. Where pipe or fitting wall thicknesses are insufficient to provide the required number of threads, a boss or pipe saddle shall be installed.

F. The work shall include, but not be limited to, the following:

1. Connections to existing pipelines.

2. Test excavations necessary to locate or verify existing pipe and appurtenances.

3. Installation of all new pipe and materials required for a complete installation.

4. Cleaning, testing and disinfecting as required.

1.02 MATERIAL CERTIFICATION AND SHOP DRAWINGS

A. The Contractor shall furnish a Material Certification stating that the pipe materials and specials furnished under this Section conform to all applicable provisions of the corresponding Specifications. Specifically, the Certification shall state compliance with the applicable standards (ASTM, AWWA, etc.) for fabrication and testing.

B. Shop Drawings for major piping (2-inches in diameter and greater) shall be prepared and submitted in accordance with the Contract Documents.

C. Shop Drawings shall include, but not be limited to, complete piping layout, pipe material, sizes, class, locations, necessary dimensions, elevations, supports, hanger details, pipe joints, and the details of fittings including methods of joint restraint. No fabrication or installation shall begin until Shop Drawings are approved by the Engineer.

PART 2 – PRODUCTS

2.01 GENERAL

A. All specials and every length of pipe shall be marked with the manufacturer's name or trademark, size, class, and the date of manufacture. Special care in handling shall be exercised during delivery, distribution, and storage of pipe to avoid damage and unnecessary stresses. Damaged pipe will be rejected and shall be replaced at the Contractor's expense. Pipe and specials stored prior to use shall be stored in such a manner as to keep the interior free from dirt and foreign matter.

B. Testing of pipe before installation shall be as described in the corresponding ASTM or AWWA Specifications and in the applicable standard specifications listed in the following sections. Testing after the pipe is installed shall be as specified in Part 3.

C. All buried piping shall have restrained joints for thrust protection unless otherwise specified or shown on the Drawings. All exposed piping shall have flanged joints, unless otherwise specified or shown on the Drawings.

D. The Drawings indicate work affecting existing piping and appurtenances. The Contractor shall excavate test pits as required of all connections and crossings which may affect the Contractor's work prior to ordering pipe and fittings to determine sufficient information for ordering materials. The Contractor shall take whatever measurements that are required to complete the work as shown or specified.

2.02 WALL PIPES

A. Where wall sleeves or wall pipes occur in walls that are continuously wet on one or both sides, they shall have water stop flanges at the center of the casting or as shown on the Drawings. Ends of wall pipes shall be flange, mechanical joint, plain end, or bell as shown on the Drawings, or as required for connection to the piping. Wall pipes shall be of the same material as the piping that they are connected to. If welded waterstop

flanges are employed, welds shall be 360 degree continuous on both sides of flange. Unless otherwise shown on the Drawings, waterstop flanges shall conform to the minimum dimensions shown below:

Pipe Size	Waterstop Flange Diameter	Waterstop Flange Thickness
4" - 12"	OD + 3.10"	0.50"
14" - 24"	OD + 4.15"	0.75"
30" - 36"	OD + 4.50"	1.00"
42" - 48"	OD + 5.00"	1.25"
54"	OD + 5.90"	1.50"

2.03 SLEEVES

A. Unless shown otherwise, all piping passing through walls and floors shall be installed in sleeves or wall castings accurately located before concrete is poured or placed in position during construction of masonry walls. Sleeves passing through floors shall extend from the bottom of the floor to a point 3 inches above the finished floor, unless shown otherwise. Water stop flanges are required on all sleeves located in floors or walls which are continually wet or under hydrostatic pressure on one or both sides of the floor or wall.

B. Sleeves shall be cast iron or fabricated steel in accordance with details shown on the Drawings. If not shown on the Drawings, the Contractor shall submit to the Engineer the details of sleeves he proposes to install; and no fabrication or installation thereof shall take place until the Engineer's approval is obtained. Steel sleeves shall be fabricated of structural steel plate in accordance with the standards and procedures of AISC and AWS. Steel sleeve surfaces shall receive a commercial sandblast cleaning and then be shop painted in accordance with Section 09900 – Painting.

C. When shown on the Drawings or otherwise required, the annular space between the installed piping and sleeve shall be completely sealed against a maximum hydrostatic pressure of 20 psig. Seals shall be mechanically interlocked, solid rubber links, trade name "Link-Seal", as manufactured by Garlock Pipeline Technologies (GPT) or equal. Rubber link, seal-type, size, and installation thereof, shall be in strict accordance with the manufacturer's recommendations. For non-fire rated walls and floors, pressure plate shall be glass reinforced nylon plastic with EPDM rubber seal and 316 stainless steel bolts and nuts. For fire rated walls and floors, two independent seals shall be provided consisting of low carbon steel, zinc galvanized pressure plates, silicon rubber seals and 316 stainless steel bolts and nuts.

D. Cast iron mechanical joint adapter sleeves shall be Clow # 1429, as manufactured by the Clow Corp., or equal. Mechanical joint adapter sleeves shall be provided with suitable gasket, follower ring, and bolts to affect a proper seal. In general, sleeves

installed in walls, floors, or roofs against one side of which will develop a hydrostatic pressure, or through which leakage of liquid will occur, shall be so sealed. If welded waterstop flanges are employed, welds shall be 360 degree continuous on both sides of flange.

2.04 SOLID SLEEVE COUPLINGS (FOR BURIED SERVICE THROUGH 54-INCH)

A. Solid sleeve couplings shall be used to connect buried service piping where shown on the Drawings. Solid sleeves shall be ductile iron, long body and shall conform to the requirements of ANSI A21.10 (AWWA C110). Unless otherwise shown or specified, solid sleeve couplings shall be Style A11760 as manufactured by American Cast Iron Pipe Co., or equal. Solid sleeve couplings shall be restrained with wedge-type restraining glands to meet the pressures specified in 40 06 20 – Schedules.

B. Alternatively, EBAA Iron 3800 Mega-Coupling is acceptable.

2.05 SLEEVE TYPE COUPLINGS (FOR EXPOSED SERVICE AND BURIED SERVICE ABOVE 54-INCH)

A. Sleeve type, flexible couplings shall be furnished and installed where shown on the Drawings or otherwise required to resist internal operating pressures. In addition to that specified herein, harnessed, sleeve type flexible couplings shall be provided on all exposed pipe 3 inches and larger in diameter that spans any expansion joint in a building or structure.

B. Materials shall be of high strength steel and couplings shall be rated for the same pressures as the connecting piping.

C. Gaskets shall be rubber. Bolts and nuts shall be alloy steel, corrosion-resistant and prime coated.

D. Harnessing for exposed applications shall be by rodding across the sleeve type coupling to the nearest pipe joint on either side of the coupling using threaded rods and rod tabs unless otherwise approved by the Engineer.

E. Couplings shall be as manufactured by Smith-Blair Model 411, Romac Industries Model 400, Dresser Industries Style 38, or equal as required and shown on the Drawings. All couplings shall be provided without interior pipe stop.

F. Couplings shall be provided with manufacturer’s fusion bonded epoxy painting system.

2.06 FLANGED COUPLING ADAPTERS

A. Flanged coupling adapters shall be furnished as required and as shown on the Drawings.

B. Flanged coupling adapters shall be of ductile iron or carbon steel construction and shall be rated for the same pressure as the connected piping.

C. All flanged coupling adapters shall be harnessed by tying the adapter to the nearest pipe joint flange using threaded rods and rod tabs unless otherwise approved by the Engineer.

D. Flanged coupling adapters shall be manufactured by Smith-Blair Model 912 or 913, Romac Industries Model FCG or FC 400, Dresser Industries Model 128-W, or equal.

E. Flanged coupling adapters shall be provided with manufacturer's fusion bonded epoxy painting system.

2.07 RESTRAINED FLANGE COUPLING ADAPTERS

A. Description: Wedge style restrained flanging system for adapting and restraining plain end pipe to flanged pipe or fitting.

B. Products and Manufacturers: Provide one of the following:

1. Series 2100, as manufactured by EBAA.

2. Or approved equal.

C. Pressure and Service: Same as connected piping.

D. Material: Ductile iron.

E. Gasket: Recommended by the manufacturer.

F. Coating: Manufacturer's fusion bonded epoxy painting system.

G. Bolts and Nuts: Alloy steel, corrosion-resistant, primer-coated.

2.08 DISMANTLING JOINTS

A. Dismantling joints shall be furnished at locations shown on the Drawings.

B. Dismantling joints for sizes less than 12-inch shall be of ductile iron or carbon steel construction and shall be rated for the same pressure as the connected piping. Dismantling joints for sizes greater than 12-inches shall be of carbon steel construction and shall be rated for the same pressure as the connected piping.

C. Flanges for dismantling joints shall match the bolt pattern and pressure rating of the flanges for the connected piping.

D. All dismantling joints shall be restrained utilizing restraining rods provided by the manufacturer. Restraining rods shall be constructed from ASTM A193 Grade B7 steel. Restraining rods and restraint system shall be installed in strict accordance with manufacturer's recommendations.

E. Dismantling joints shall be provided with manufacturer's fusion bonded epoxy painting system.

F. Dismantling joints shall be manufactured by Smith Blair Model 975, Romac Industries Model DJ400, or equal.

2.09 GROOVED COUPLINGS

A. Grooved end pipe couplings shall be furnished as specified or shown on the Drawings.

B. Materials shall be of malleable iron and couplings shall be rated for the same pressures as the connecting piping.

C. Gaskets shall be rubber. Bolts and nuts shall be heat treated carbon steel track bolts and shall be plated.

D. After installation, buried couplings shall receive two heavy coats of an approved coal tar which is compatible with the finish of the coupling. Exposed couplings shall be painted in accordance with Section 09900 – Painting.

E. Couplings shall be manufactured by Victaulic Company of America Style 31 or equal.

2.10 TAPPING SLEEVES AND TAPPING SADDLES

A. Tapping sleeves shall be similar to Mueller Outlet Seal, American Uniseal or Kennedy Square Seal. All sleeves shall have a minimum working pressure of 150 psi. All sleeves larger than twelve (12) inches shall be ductile iron. All taps shall be machine drilled; no burned taps will be allowed.

B. Tapping saddles may be used on mains sixteen (16) inches and larger where the required tap size does not exceed one-half the size of the main (i.e. 8-inch tapping saddle for use on a 16-inch main). Tapping saddles shall be manufactured of ductile iron providing a factor of safety of at least 2.5 at a working pressure of 250 psi. Saddles shall be equipped with a standard AWWA C-110-77 flange connection on the branch. Sealing gaskets shall be "O" ring type, high quality molded rubber having an approximate seventy durometer hardness, placed into a groove on the curved surface of the tapping saddles. Straps shall be of alloy steel. The tapping saddle shall be the American tapping saddle, U.S. Pipe tapping saddle, or equal. All taps shall be machine cut, no burned taps will be allowed.

2.11 UNIONS

A. For ductile iron, carbon steel, and grey cast iron pipes assembled with threaded joints and malleable iron fittings, unions shall conform to ANSI B16.39.

B. For copper piping, unions shall have ground joints and conform to ANSI B16.18.

C. For PVC and CPVC piping, unions shall be socket weld type with Viton O-ring.

2.12 THERMOPLASTIC TUBING AND FITTINGS

A. Thermoplastic tubing shall be manufactured from polyallomor tubing. Tubing shall be protected from ultraviolet radiation degradation with a black coating or integral color conforming to ASTM D-1248, Type 1, Class C, Category 3. Fittings and connectors used with thermoplastic tubing shall be the flareless tube type constructed of brass conforming to SAE CA377, SAE CA360 or equal. Brass sleeves shall be used.

B. Assembly of the thermoplastic tubing shall consist of pushing the tubing into the fitting and hand tightening the nut with final tightening with a wrench. Care shall be taken not to overtighten the nut. Plastic tube racks and bend holders shall be provided for holding the tubing in position. Needle valves used with thermoplastic tubing shall be the globe type constructed with a brass body, stem and seat and Buna-N "O"-ring seals. Installation shall be in accordance with the manufacturer's recommendations. Thermoplastic tubing, shall be the Impolene (polyallomor) system and needle valves, fittings and connectors shall be the Poly-Flo with 261 UB Universal Nut and Sleeve system as manufactured by Imperial Eastman, or equal.

2.13 FLEXIBLE RESTRAINED EXPANSION JOINTS

A. Restrained expansion joints shall be manufactured of 60-42-10 ductile iron conforming to material and other applicable requirements of ANSI/AWWA C153/A21.53.

B. Each pressure containing component shall be lined with a minimum of 15 mils of fusion bonded epoxy conforming to the materials requirements of, and tested in accordance with, ANSI/AWWA C213 and shall meet or exceed the requirements of ANSI/AWWA C550.

C. Seals shall conform to the applicable requirements of ANSI/AWWA C111/A21.11.

D. All bolts used in the assemblies shall be stainless steel and shall be coated with a premium quality epoxy.

E. Flanged ends shall comply with ANSI/AWWA C110/A21.10, with the addition of O-ring groove and O-ring.

F. Mechanical joint ends shall comply with ANSI/AWWA C153/A21.53.

G. Restrained expansion joints shall have a minimum pressure rating of 350 psi with a minimum safety factor of 3:1. Each assembly shall be tested at 350 psi before shipment.

H. Restrained expansion joints shall provide for self-restraint without tie rods and shall provide for expansion and contraction capabilities cast as an integral part of the end connection.

I. Flexible restrained expansion joints shall consist of an expansion joint designed and cast as an integral part of a ball and socket type flexible joint having a minimum of 15 degrees deflection per ball.

J. Restrained expansion joints shall be the Single Ball or Double Ball FLEX-TEND Expansion Joint as manufactured by EBAA Iron Inc., or equal.

PART 3 – EXECUTION

3.01 INSTALLATION

A. All piping shall be installed by skilled workmen and in accordance with the best standard practice for piping installation as shown on the Drawings, specified or recommended by the pipe manufacturer. Proper tools and appliances for the safe and convenient handling and installing of the pipe and fittings shall be used. Great care shall be taken to prevent any pipe coating from being damaged on the inside or outside of the pipe and fittings. All pieces shall be carefully examined for defects, and no piece shall be installed which is known to be cracked, damaged, or otherwise defective. If any defective pieces should be discovered after having been installed, it shall be removed and replaced with a sound one in a satisfactory manner by the Contractor and at his own expense. Pipe and fittings shall be thoroughly cleaned before they are installed and shall be kept clean until they are accepted in the complete work. All piping connections to equipment shall be provided with unions or coupling flanges located so that piping may be readily dismantled from the equipment. At certain applications, Dresser, Victaulic, or equal, couplings may also be used. All piping shall be installed in such a manner that it will be free to expand and contract without injury to itself or to structures and equipment to which it is connected. All piping shall be erected to accurate lines and grades with no abrupt changes in line or grade and shall be supported and braced against movement, temporary, or permanent. All exposed piping shall be installed with vertical and horizontal angles properly related to adjoining surfaces or pipes to give the appearance of good workmanship. Unless otherwise shown or approved, provided a minimum headroom clearance under all piping of 7 feet 6 inches.

B. Unless otherwise shown or specified, all waste and vent piping shall pitch uniformly at a 1/4-inch per foot grade and accessible cleanouts shall be furnished and installed as shown and as required by local building codes. Installed length of waste and vent piping shall be determined from field measurements in lieu of the Drawings.

C. All excavation shall be made in such a manner and to such widths as will provide ample room for properly installing the pipe and permit thorough compaction of backfill around the pipe. The minimum trench widths shall be in strict accordance with the "Trench Width Excavation Limits" as shown on the Drawings. All excavation and trenching shall be done in strict accordance with these specifications and all applicable parts of the OSHA Regulations, 29CFR 1926, Subpart P.

D. All excavation required by this Contract shall be unclassified. No additional payment will be made for rock excavation required for the installation of pipe or structures shown on the Drawings.

E. Enlargements of the trench shall be made as needed to give ample space for operations at pipe joints. The width of the trench shall be limited to the maximum dimensions shown on the Drawings, except where a wider trench is needed for the installation of and work within sheeting and bracing. Except where otherwise specified, excavation slopes shall be flat enough to avoid slides which will cause disturbance of the subgrade, damage to adjacent areas, or endanger the lives or safety of persons in the vicinity.

F. Hand excavation shall be employed wherever, in the opinion of the Engineer, it is necessary for the protection of existing utilities, poles, trees, pavements, or obstructions.

G. No greater length of trench in any location shall be left open, in advance of pipe laying, than shall be authorized or directed by the Engineer and, in general, such length shall be limited to approximately one hundred (100) feet. The Contractor shall excavate the trenches to the full depth, width and grade indicated on the Drawings including the relevant requirements for bedding. The trench bottoms shall then be examined by the Engineer as to the condition and bearing value before any pipe is laid or bedding is placed.

H. No pressure testing shall be performed until the pipe has been properly backfilled in place. All pipe passing through walls and/or floors shall be provided with wall pipes or sleeves in accordance with the specifications and the details shown on the Drawings. All wall pipes shall be of ductile iron and shall have a water stop located in the center of the wall. Each wall pipe shall be of the same class, thickness, and interior coating as the piping to which it is joined. All buried wall pipes shall have a coal tar outside coating on exposed surfaces.

I. Joint deflection shall not exceed 75% of the manufacturer’s allowable deflection.

J. Excavation and backfilling shall conform to the requirements of Section 02200 – Earthwork, and as specified herein. Maximum trench widths shall conform to the Trench Width Excavation Limits shown on the Drawings. All exposed, submerged, and buried piping shall be adequately supported and braced by means of hangers, concrete piers, pipe supports, or otherwise as may be required by the location.

K. Following proper preparation of the trench subgrade, pipe and fittings shall be carefully lowered into the trench so as to prevent dirt and other foreign substances from gaining entrance into the pipe and fittings. Proper facilities shall be provided for lowering sections of pipe into trenches. Under no circumstances shall any of the materials be dropped or dumped into the trench.

L. Water shall be kept out of the trench until jointing and backfilling are completed. When work is not in progress, open ends of pipe, fittings, and valves shall be securely closed so that no water, earth, or other substance will enter the pipes, fitting, or valves. Pipe ends left for future connections shall be valved, plugged, or capped, and anchored as required.

M. All piping shall be installed in such a manner that it will be free to expand and/or contract without injury to itself or to structures and equipment to which it is connected. All piping shall be erected to accurate lines and grades with no abrupt changes in line or grade and shall be supported and braced against movement, temporary, or permanent. All exposed piping shall be installed with vertical and horizontal angles properly related to adjoining surfaces or pipes to give the appearance of good workmanship. Pipes crossing within a vertical distance of less than or equal to one (1) foot shall be encased and supported with concrete at the point of crossing to prevent damage to the adjacent pipes as shown on the Drawings.

N. The full length of each section of pipe shall rest solidly upon the bed of the trench, with recesses excavated to accommodate bells, couplings, joints, and fittings. Before joints are made, each pipe shall be well bedded on a solid foundation; and no pipe shall be brought into position until the preceding length has been thoroughly bedded and secured in place. Pipe that has the grade or joint disturbed after laying shall be taken up and relaid by the Contractor at his own expense. Pipe shall not be laid in water or when trench conditions are unsuitable for work.

O. Proper and suitable tools and appliances for the safe convenient handling and laying of pipe shall be used and shall in general agree with manufacturer's recommendations.

P. At the close of each work day, the end of the pipeline shall be tightly sealed with a cap or plug so that no water, dirt, or other foreign substance may enter the pipeline, and this plug shall be kept in place until pipe laying is resumed.

Q. During the laying of pipe, each pipe manufacturer shall provide his own supervisor to instruct the Contractor's pipe laying personnel in the correct procedure to be followed.

R. Ordinarily only full lengths of pipe (as furnished by the pipe manufacturer) shall be used exceptions: closure pieces at manholes and areas where joint deflection is required.

S. For gravity sewer installations, the Contractor shall use a laser device to maintain the trench and pipe alignment. The laser device shall be re-checked for correct elevation and pipe alignment prior to pipe installation if the device is left in the pipe overnight. Corrected invert elevations at each manhole and any adjustments will be coordinated and approved by the Engineer.

T. At the close of Work each day, pipeline trenches shall be completely backfilled. In paved areas the surfaces shall be restored to allow for traffic over the trench during non-working hours. Under no conditions shall any pipeline trench be left open during non-working hours.

3.02 JOINTS IN PIPING

A. Restrained joints shall be provided on all pipe joints as specified herein and shown on the Drawings. Restrained joints shall be made up similar to that for push-on joints.

B. Push-on joints include a single rubber gasket which fits into the bell end of the pipe. The gasket shall be wiped clean, flexed and then placed in the socket. Any bulges in the gasket which might interfere with the entry of the plain end of the pipe shall be removed. A thin film of lubricant shall be applied to the gasket surface which will come into contact with the spigot end of the pipe. The lubricant shall be furnished by the pipe manufacturer. The plain end of the pipe, which is tapered for ease of assembly, shall be wiped clean and a thick film of lubricant applied to the outside. The pipe shall be aligned and carefully entered into the socket until it just makes contact with the gasket. The joint assembly shall be completed by entering the pipe past the gasket until it makes contact with the bottom of the socket. The pipe shall be pulled "home" with an approved jack assembly as recommended by the pipe manufacturer. If assembly is not accomplished by reasonable force, the plain end shall be removed, and the condition corrected.

C. Flanged joints shall be brought to exact alignment and all gaskets and bolts or studs inserted in their proper places. Bolts or studs shall be uniformly tightened around the joints. Where stud bolts are used, the bolts shall be uniformly centered in the connections and equal pressure applied to each nut on the stud. Pipes in all lines subject to temperature changes shall be cut short and cold sprung into place to compensate for expansion when hot.

D. Mechanical joints shall be made up with gaskets, glands and bolts. When a joint is to be made up, the bell or socket and plain end shall be cleaned and washed with a solution of mild soap in water; the gland and gasket shall be slid onto the plain end and the end then entered into the socket until it is fully "home" on the centering ring. The gasket shall then be painted with soapy water and slid into position, followed by the gland. All bolts shall be inserted and made up hand tight and then tightened alternately to bring the gland into position evenly. Excessive tightening of the bolts shall be avoided. All nuts shall be pulled up using a torque wrench which will not permit unequal stresses in the bolts. Torque shall not exceed the recommendations of the manufacturer of the pipe and bolts for the various sizes. Care shall be taken to assure that the pipe remains fully "home" while the joint is being made. Joints shall conform to the applicable AWWA Specifications.

E. Threaded and/or screwed joints shall have long tapered full depth threads to be made with the appropriate paste or jointing compound, depending on the type of fluid to be processed through the pipe. All pipe up to, and including 1-1/2-inches, shall be reamed to remove burr and stood on end and well pounded to remove scale and dirt. Wrenches on valves and fittings shall be applied directly over the joint being tightened. Not more than three pipe threads shall be exposed at each connection. Pipe, in all lines subject to temperature changes shall be cut short and cold sprung into place to compensate for expansion when hot. Joints in all piping used for chlorine gas lines shall be made up with a glycerine and litharge cement. Joints in plastic piping (PVC/CPVC) shall be laid and

joints made with compounds recommended by the manufacturer. Installation shall conform to the requirements of ASTM D2774 and ASTM D2855. Unions required adjacent to valves and equipment.

F. Soldered joints shall have the burrs removed and both the outside of pipe and the inside of fittings shall be thoroughly cleaned by proper tools recommended for that purpose. Flux shall be applied to both pipe and inside of fittings and the pipe placed into fittings and rotated to insure equal distribution of flux. Joints shall be heated and solder applied until it shows uniformly around the end of joints between fitting and pipe. All joints shall be allowed to self-cool to prevent the chilling of solder. Combination flux and solder paste manufactured by a reputable manufacturer is acceptable. Unions required adjacent to valves and equipment.

G. Welded joints shall be made by competent operators in a first class workmanlike manner, in complete accordance with ANSI B31.1 and AWWA C206. Welding electrodes shall conform to ASTM A233, and welding rod shall conform to ASTM A251. Only skilled welders capable of meeting the qualification tests for the type of welding which they are performing shall be employed. Tests, if so required, shall be made at the expense of the Contractor, if so ordered by the Engineer. Unions shall be required adjacent to valves and equipment.

H. Copper joints shall be thoroughly cleaned and the end of pipes uniformly flared by a suitable tool to the bevels of the fittings used. Wrenches shall be applied to the bodies of fittings where the joint is being made and in no case to a joint previously made. Dimensions of tubing and copper piping shall be in complete accordance with the fittings used. No flare joints shall be made on piping not suited for flare joints. Installations for propane gas shall be in accordance with NFPA 54 and/or 58.

I. Solvent or adhesive welded joints in plastic piping shall be accomplished in strict accordance with the pipe manufacturer's recommendations, including necessary field cuttings, sanding of pipe ends, joint support during setting period, etc. Care shall be taken that no droppings or deposits of adhesive or material remain inside the assembled piping. Solvent or adhesive material shall be compatible with the pipe itself, being a product approved by the pipe manufacturer. Unions are required adjacent to valves and equipment. Sleeve-type expansion joints shall be supplied in exposed piping to permit 1-inch minimum of expansion per 100 feet of pipe length.

J. Dielectric isolation such as flange isolation kits, dielectric unions, or similar, shall be installed wherever dissimilar metals are connected according to the following table.

	Zinc	Galvanized Steel	Aluminum	Cast Iron	Ductile Iron	Mild Steel/ Carbon Steel	Copper	Brass	Stainless Steel
Zinc			●	●	●	●	●	●	●
Galvanized Steel			●	●	●	●	●	●	●
Aluminum	●	●		●	●	●	●	●	●
Cast Iron	●	●	●				●	●	●
Ductile Iron	●	●	●				●	●	●
Mild Steel/ Carbon Steel	●	●	●				●	●	●
Copper	●	●	●	●	●	●			●
Brass	●	●	●	●	●	●			●
Stainless Steel	●	●	●	●	●	●	●	●	

Notes:
● signifies dielectric isolation is required between the two materials noted.
Consult Engineer for items not listed in table.
Provide flange isolation kits for all flanged connections of dissimilar metals and hardware including connections to equipment.
Contractor shall include all isolation descriptions with piping submittals.

K. Eccentric reducers shall be installed where air or water pockets would otherwise occur in mains because of a reduction in pipe size.

L. Joints in polypropylene and polyvinylidelene fluoride pipe shall be butt fusion weld. All butt welding shall follow the requirements of ASTM D-2657 and the manufacturer's recommendations.

3.03 FLUSHING AND TESTING

A. All piping shall be properly flushed and tested unless specifically exempted elsewhere in the Specifications or otherwise approved by the Engineer. Air and gas pipelines shall be flushed and tested with compressed air. Gravity sewer piping shall be flushed and tested as specified in Section 02640 – Utility Structures. All other liquid conveying pipelines shall be flushed and tested with water. The Contractor shall furnish and install all means and apparatus necessary for getting the air or water into the pipeline for flushing and testing including pumps, compressors, gauges, and meters, any necessary plugs and caps, and any required blow-off piping and fittings, etc., complete with any necessary reaction blocking to prevent pipe movement during the flushing and testing. All pipelines shall be flushed and tested in such lengths or sections as agreed upon among the

Owner, Engineer, and Contractor. Owner or Engineer shall provide test pressure. Test pressures shall be as measured at the lowest point of the pipe segment being tested. The Contractor shall give the Owner and Engineer reasonable notice of the time when he intends to test portions of the pipelines. The Engineer reserves the right, within reason, to request flushing and testing of any section or portion of a pipeline.

B. The Contractor shall provide water for all flushing and testing of liquid conveying pipelines. Raw water or non-potable water may be used for flushing and testing liquid pipelines not connected to the potable water system. Only potable water shall be used for flushing and testing the potable water system.

C. Air and gas piping shall be completely and thoroughly cleaned of all foreign matter, scale, and dirt prior to start-up of the air or gas system.

D. At the conclusion of the installation work, the Contractor shall thoroughly clean all new liquid conveying pipe by flushing with water or other means to remove all dirt, stones, pieces of wood, etc., which may have entered the pipe during the construction period. If after this cleaning any obstructions remain, they shall be corrected by the Contractor, at his own expense, to the satisfaction of the Engineer. Liquid conveying pipelines shall be flushed at the rate of at least 2.5 feet per second for a duration suitable to the Engineer or shall be flushed by other methods approved by the Engineer.

E. Compressed/service air and gas piping shall be flushed by removing end caps from the distribution lines and operating one (1) compressor, in accordance with the manufacturer's instructions.

F. After flushing, all air piping shall be pressure and leak tested prior to coating and wrapping of welded joints. Immediately upon successful completion of the pressure and leak test, welded joints shall be thoroughly cleaned of all foreign matter, scale, rust, and discoloration and coated in accordance with the Specifications.

G. All process air piping shall be leak tested by applying a soap solution to each joint. Leak tests shall be conducted with one (1) blower in service at normal operating pressure.

H. During testing the piping shall show no leakage. Any leaks or defective piping disclosed by the leakage test shall be repaired or replaced by the Contractor, at his own expense, and the test repeated until all such piping shows tight.

I. All buried process air piping shall be pressurized to 25 psig and tested for leaks by applying a soap solution to each joint. The air supply shall be stopped and the pipe pressure monitored. System pressure shall not fall by more than 0.5% of the 25 psig test pressure over a one-hour test period. Should the system fail to hold the required pressure for one hour, the cause shall be determined and corrected and the test repeated until a successful test of the entire system is obtained.

J. Field leakage tests shall be performed for all submerged process air piping. The procedure shall consist of operating the system under clear nonpotable water for visual

identification of all leaks. All field leakage tests shall be witnessed by the Engineer. All submerged piping shall be installed free of any leaks.

K. After flushing, all liquid conveying pipelines shall be hydrostatically tested at the test pressure specified. The procedure used for the hydrostatic test shall be in accordance with the requirements of AWWA C600. Each pipeline shall be filled with water for a period of no less than 24 hours and then subjected to the specified test pressure for 2 hours. During this test, exposed piping shall show no leakage. Allowable leakage in buried piping shall be in accordance with AWWA C600.

L. Any leaks or defective pipe disclosed by the hydrostatic test shall be repaired or replaced by the Contractor, at his own expense, and the test repeated until all such piping shows tight.

M. After flushing, all gas piping shall be leak tested in accordance with all local codes and regulations and in conformance with the recommendations or requirements of any National Institute or Association for the specific service application.

3.04 PAINTING AND COLOR-CODING SYSTEM

A. All exposed piping specified shall be color coded in accordance with the Owner's standard color designation system for pipe recognition and in accordance with Section 15030 – Piping and Equipment Identification Systems. In the absence of a standard color designation system, the Engineer will establish a standard color designation for each piping service category from color charts submitted by the Contractor in compliance with Section 09900 – Painting.

B. All piping specified in this Section shall be painted in accordance with Section 09900 – Painting, except as follows:

1. Copper pipe

2. Stainless steel pipe. Flanges and supports or hangers shall be painted.

[END OF SECTION]

SECTION 15006

DUCTILE IRON PIPE AND FITTINGS

PART 1 GENERAL

1.01 SCOPE

A. All ductile iron pipe and specials shall be marked with the manufacturer's name or trademark, size, weight, thickness class, the date of manufacture, and the word "Ductile".

B. Ductile iron pipe (DIP) of the sizes shown or specified shall conform to ANSI A21.51 (AWWA C151), Grade 60 42 10 for ductile iron pipe centrifugally cast in metal molds or sand lined molds. All ductile iron pipe shall conform to ANSI A21.50 (AWWA C150) for thickness design and shall be supplied in 18 or 20 foot nominal lengths or as required to meet the requirements of the Drawings. Fittings and specials shall be ductile iron, conforming to the requirements of ANSI A21.10 (AWWA C110) or ANSI A21.53 (AWWA C153).

C. Minimum Class 53 pipe shall be used for flanged spools.

PART 2 PRODUCTS

2.01 DUCTILE IRON PIPE AND FITTINGS

A. All pipe and fittings, with the exception of glass lined pipe and sleeves, shall be cement mortar lined. Linings shall conform to American Standard Specifications for Cement Mortar Lining for Ductile Iron Pipe and Fittings, ANSI A21.4 (AWWA C104) and shall be standard thickness. The mortar lining shall be protected with the bituminous seal coat. All buried DIP and fittings shall have a bituminous coating on the exterior surfaces in accordance with ANSI A21.51 (AWWA C151). All exposed DIP and fittings shall have a shop applied prime coat in accordance with Section 09900 - Painting.

B. Glass lined ductile iron pipe shall be furnished and installed where specified in the Exterior Piping System Schedule. The finished lining shall be from 0.008 inch to 0.012 inch thick, hardness of from 5 to 6 on the Mohs Scale, density of from 2.5 to 3.0 grams per cubic centimeter as measured in accordance with the requirements of ASTM D792 and be capable of withstanding a thermal shock of 350°F without crazing, blistering, or spalling. The lining shall be Ervite Type SG 14, as manufactured by the Ervite Corporation, Erie, Pa., Ferrock MEH 32, by Water Works Supply & Mfg., Co., Marysville, CA, or equal.

C. Cutting of glass lined pipe in the field shall be limited to only one piece per run of pipe, and this shall be for closure purposes only. Spalling of the glass liner shall be no more than 1/8 inch back from the cut. Flanges and bolt holes on spool pieces shall be aligned prior to glassing and shall be sealed and tested prior to shipment in accordance with the manufacturer's recommendation. Warping of flanges and/or pipe may be cause for rejection as determined by the Engineer.

D. Requirements for various types of joints are described in the following paragraphs. UNLESS OTHERWISE NOTED HEREIN OR ON THE DRAWINGS, ALL EXPOSED DUCTILE IRON PIPING SHALL HAVE FLANGED JOINTS.

E. Flanged joints and fittings shall have a minimum pressure rating of 250 psi with 125 lb. American Standard flanges. All flanges and fittings shall conform to the requirements of ANSI B16.1. Flanges shall be ductile iron and shall be of the threaded or screw on type. The

face of the flanges shall be machined after installation of the flange to the pipe. No raised surface shall be allowed on flanges. Flanged pipe shall conform to the requirements of ANSI Specification A21.15, (AWWA C115). Pipe lengths shall be fabricated to meet the requirements of the Drawings.

F. Gaskets shall be the "Ring Gasket" type, 1/8 inch minimum thickness, cloth inserted rubber, red rubber or neoprene and shall be suitable for the service intended. Gaskets for glass lined pipe shall be TORUSEAL flange gasket, or equal. Bolts shall be of the size and length called for and in accordance with the "American Standard" and comply with the requirements of the ANSI/AWWA Standards. The bolts for flanged joints shall be a minimum ASTM A307; Grade B carbon steel and be in accordance with ANSI A21.10, (AWWA C110). The bolts shall have hexagonal heads and nuts, no washers shall be used.

G. Bell and spigot pipe shall be provided with push on, O ring rubber gasket, compression type joints and shall conform to the requirements of ANSI A21.11 (AWWA C111). Fittings and specials shall be supplied with mechanical joints as specified for mechanical joint pipe. If required by installation conditions, pipe shall have cast on lugs for adequately tying it together.

H. Mechanical joints and fittings shall conform to the requirements of ANSI A21.11, (AWWA C111). Joints shall be made employing a tapered rubber gasket forced into a tapered groove with a ductile iron follower ring. If required by installation conditions, pipe and fittings shall have cast on lugs for adequately tying the pipe and fittings together. These shall be in conformance with standard practice and as outlined under the appropriate AWWA Specifications.

I. Bolts for mechanical joints shall be high strength corrosion resistant low-alloy steel tee-head bolts with hexagonal nuts.

J. Mechanical coupling joint pipe and fittings shall be split type, shouldered end. Coupling materials shall be malleable iron. Couplings shall have a minimum pressure rating and service equal to that of the connected piping. Gaskets shall be of rubber. Bolts and nuts shall be heat treated carbon steel track bolts and shall be plated. After installation, buried couplings shall receive two heavy coats of coal tar epoxy (min. 24 mil thickness) which is compatible with the finish of the couplings. Couplings shall be as manufactured by Victaulic Company of America Style 31, or equal.

K. Restrained joint pipe shall consist of factory manufactured bolted retainer rings, ductile iron locking segments held in place by rubber retainers, or ductile iron retaining rings that lock over the bell of the joint and are secured to prevent rotation, and factory welded retainer beads or rings on the spigot of the pipe. All components of the bolted or snap ring assemblies shall be constructed of corrosion-resistant, high strength, low-alloy steel. Restrained joint pipe shall be Flex-Ring or Lock-Ring type joints as manufactured by American Ductile Iron Pipe Company, HP LOK or TR Flex as manufactured by US Pipe, Bolt-Lok or Snap-Lok as manufactured by Griffin Pipe Products, TR Flex or Super Lock as manufactured by Clow Water Systems Co., or approved equal.

L. Restrained fittings for piping systems 16-inches in diameter and greater shall have factory restraint systems identical to the factory restrained joint pipe specified in Item K above. All fittings shall be minimum pressure Class 250 unless otherwise specified.

M. Restrained fittings for pipe systems 14-inches in diameter and smaller shall be Mechanical Joint fittings with restraint assemblies such as Stargrip by Star Pipe Systems, Mega Lug by EBAA Iron, ONE LOK by Sigma, Grip Ring by Romac, or approved equal. Where threaded-rods are allowed, the rods and tabs shall be designed for the specified restraint system

design pressure, shall have lengths less than 10 feet between fittings, and shall be painted with two heavy coats of coal tar epoxy after installation.

N. The manufactured systems for thrust restraint indicated above shall be used where restrained joint ductile iron pipe and fittings are specified or indicated on the drawings. Gripping gaskets are not an acceptable form of restraint. Thrust restraint and harnessing systems such as threaded-rods, friction clamps, retainer glands shall be used only where specifically specified herein, indicated on the drawings or if allowed by the Engineer in isolated applications where conditions warrant and necessitate their use. Concrete thrust blocks may be used in accordance with the schedule indicated on the drawings, if applicable.

O. All buried ductile iron pipe shall be polywrapped.

[END OF SECTION]

SECTION 15008

PVC PIPE

PART 1 GENERAL

1.01 SCOPE

A. Reference Section 15000, Basic Mechanical Requirements.

PART 2 PRODUCTS

2.01 POLYVINYL CHLORIDE (PVC) PIPE AND FITTINGS

A. PVC pipe and fittings shall be manufactured in accordance with ASTM D 1785, D 1784 and F 441, "normal impact" pipe, Schedule 40 or 80 as specified.

B. Fittings used with this pipe shall be socket type or flanged type as specified herein or indicated on the Drawings. Plastic piping shall be installed in full accordance with the manufacturer's recommendations for the specific installation. No field bending or distortion of the pipe will be permitted.

C. PVC pipe shall be Type 1 Grade 1 conforming to ASTM D 1784 and D 1785. Fittings shall conform to the following standard specifications:

1. Socket Type SDR 26

2. Socket Type SDR 18 or 19 (C-900)

D. Provide flanged fittings of the same material as the specified pipe and material conforming to ANSI B16.5 at all valves and equipment except at true (double) union valves. Flange gaskets shall be natural rubber or other material fully compatible with the fluid being conveyed. Where flanged piping is used with chemical systems, the gasket material shall conform to the requirements of the following table. Flange bolts shall be type 316 stainless steel minimum, with higher grade materials used where necessary for fluid (chemical) compatibility.

Chemical	Acceptable Gasket Material
Ammonium Hydroxide	EPDM
Aluminum Sulfate	EPDM, Viton
Ammonium Sulfate	EPDM
Calcium Hypochlorite	Viton
Carbon Dioxide Solution	Viton
Chlorine Solution	Viton
Chlorine Dioxide Solution	Viton
Ferric Chloride	EPDM, Viton
Ferric Sulfate	EPDM, Viton
Hydrochloric Acid	Viton
Hydrofluosilicic Acid	Viton
Lime Slurry	EPDM, Viton
Magnesium Chloride	EPDM, Viton

Chemical	Acceptable Gasket Material
Magnesium Hydroxide	EPDM, Viton
Methanol	EPDM
Ozone Solution	Viton
Phosphoric Acid	Viton
Polyaluminum Chloride	EPDM, Viton
Polymer	Viton
Potassium Permanganate	EPDM
Powdered Activated Carbon Slurry	EPDM, Viton
Sodium Bisulfite	EPDM, Viton
Sodium Hydroxide (Caustic)	EPDM
Sodium Hypochlorite	Viton
Sodium Permanganate	Teflon, Hypalon, Silicone, AFLAS, Kalrez, Santoprene
Sodium Silicate	EPDM, Viton
Sodium Thiosulfate	EPDM, Viton
Sulfur Dioxide Solution	EPDM, Viton
Sulfuric Acid	Viton
Zinc Orthophosphate	EPDM, Viton

E. C900-Class 200 shall be in sizes between 4 inches and 12 inches and shall meet the requirements of AWWA C900 "Poly Vinyl Chloride (PVC) Pressure Pipe" and shall conform to all the requirements of ASTM D1784 and ASTM D2241. The pipe shall be a minimum of DR 14 and shall be capable of withstanding the overburden pressures determined by the depth of burial in the field.

1. Pipe material shall be made from clean, virgin, NSF approved Class 12454-A PVC compound conforming to resin specification ASTM D1784. Standard laying lengths shall be 20-feet (±1 inch). Random lengths of not more than 15% of the total footage of each size may be shipped in lieu of the standard lengths. Reruns of reclaimed material shall not be accepted.

2. The pipe shall have bell and spigot ends with push-on, O-ring rubber gasket, compression type joints conforming to the requirements of ASTM 2672. Elastomeric gaskets shall conform to the requirements of ASTM F477.

3. Minimum pipe stiffness (F/dY) at 5% deflection shall be 914 psi for all sizes when tested in accordance with D2241.

4. The pipe shall be designed to pass a quick burst test pressure of 985 psi applied in 60 to 70 seconds when tested in accordance with ASTM D1599, as referenced in ASTM D2241.

5. Fittings for C900-Class 200, DR 14 shall be ductile iron, bolted mechanical joint.

F. C900-Class 150 shall be in sizes between 4 inches and 12 inches and shall meet the requirements of AWWA C900 "Poly Vinyl Chlorine (PVC) Pressure Pipe" and shall conform to all the requirements of ASTM D1784 and ASTM D2241. The pipe shall be a minimum of DR 18 and shall be capable of withstanding the overburden pressures determined by the depth of burial in the field.

1. Pipe material shall be made from clean, virgin, NSF approved Class 12454-A PVC compound conforming to resin specification ASTM D1784. Standard laying lengths shall be 20-feet (±1 inch). Random lengths of not more than 15% of the total footage of each size may be shipped in lieu of the standard lengths. Reruns of reclaimed material shall not be accepted.

2. The pipe shall have bell and spigot ends with push-on, O-ring rubber gasket, compression type joints conforming to the requirements of ASTM 2677. Elastomeric gaskets shall conform to the requirements of ASTM F477.

3. Minimum pipe stiffness (F/dY) at 5% deflection shall be 435 psi for all sizes when tested in accordance with D2241.

4. The pipe shall be designed to pass a quick burst test pressure of 755 psi applied in 60 to 70 seconds when tested in accordance with ASTM D1599, as referenced in ASTM D2241.

5. Fittings for C900-Class 150, DR 18 shall be ductile iron, bolted mechanical joint.

G. PVC pressure rated pipe (PR 160) shall be in sizes between 1 1/2 inches and 12 inches and shall conform to all the requirements of ASTM D1784 and ASTM D2241 and shall be a minimum of SDR 26 and shall be capable of withstanding the overburden pressures determined by the depth of burial in the field.

1. Pipe material shall be made from clean, virgin, NSF approved Class 12454-A PVC compound conforming to resin specification ASTM D1784. Standard laying lengths shall be 20-feet (1± inch). Random lengths of not more than 15% of the total footage of each size may be shipped in lieu of the standard lengths. Reruns of reclaimed materials shall not be accepted.

2. The pipe shall have bell and spigot ends with push-on, O-ring rubber gasket, compression type joints conforming to the requirements of ASTM 2672. Elastomeric gaskets shall conform to the requirements of ASTM F477.

3. Minimum pipe stiffness (F/dY) at 5% deflection shall be 135 psi for all sizes when tested in accordance with ASTM D2241.

4. The pipe shall be designed to pass a quick burst test pressure of 500 psi applied

in 60 to 70 seconds when tested in accordance with ASTM D1599, as referenced in ASTM D2241.

5. The pipe shall be designed to pass for 1000 hours a sustained test pressure of 340 psi when tested in accordance with ASTM D1598, as referenced in ASTM D2241.

H. Fittings for PR 160, SDR 26 shall be PVC and designed for the pipe being supplied.

I. Perforated and closed drainage pipe and fittings shall be rigid PVC pipe, Schedule 40 unless otherwise shown or specified with solvent welded type joints, or approved equal. Pipe shall be slotted or have two rows of 1/4-inch diameter holes spaced 4-inches apart along the circumference of the pipe. Longitudinal spacing of holes shall be 5-inches maximum.

[END OF SECTION]

SECTION 15030

PIPING AND EQUIPMENT IDENTIFICATION SYSTEMS

PART 1 GENERAL

1.01 REQUIREMENTS

A. The Contractor shall furnish and install all components of the system for identification of piping and equipment as specified hereinafter. The system shall include the application of color coding to all new and altered plant piping. The Contractor shall paint the equipment and piping of all Contracts in the colors herein specified, and in accordance with the requirements of Section 09900, Painting.

B. In addition to the legends specified herein the Engineer may order the Contractor to furnish and install additional identification legends and arrows at no additional cost to the Owner. Such additional signs may be requested near completion of the work and shall be limited to no more than five (5) signs for each type specified herein. The legends and color combinations for additional signs shall conform to the requirements specified herein.

C. The Contractor shall submit a schedule of the colors and designations proposed in accordance with Section 01300, Submittals, and this Section. A minimum of four (4) color charts with cross references to the colors listed herein shall be included with the Submittal.

PART 2 PRODUCTS

2.01 TRACER WIRE

A. All nonmetallic pipe shall be installed with two insulated 10 or 12gauge hard drawn copper clad steel core locating wires (minimum breaking strength of 1000 pounds) with color coded HDPE coating attached to the carrier pipe using (minimum) two-inch wide duct tape. Tape shall be at every joint and four to five feet spacing. Locating wires shall terminate four or more inches above the concrete valve pad and fold back inside a three-inch PVC access pipe. A continuity test shall be performed by the HDD Contractor in the presence of the County’s inspector. Wires shall be installed on terminal water lines leading to fire hydrant. Access to tracer wires at the hydrant valve, shall be provided when the hydrant is more than 10 feet from the water main.

2.02 PIPING BAND

A. All new and altered piping shall receive identification bands. Such bands shall be 6 inches wide, neatly made by masking, and spaced at intervals of 30 inches on centers regardless of the diameter of the pipe being painted. The Contractor may use approved precut and prefinished metal bands on piping, in lieu of the masked and painted bands, where approved by the Engineer.

2.02 VALVE ID

A. All valve locations shall be identified with a concrete valve pad containing a bronze disc embedded in concrete.

2.03 PIPING IDENTIFICATION LEGEND

A. The Contractor shall apply identification legends to all types and sections of piping as shown

on the Drawings or as designated by the Engineer. Such legends shall be in the form of plain block lettering giving the name of the pipe content in full or abbreviated form, and showing the direction of flow by arrows. All lettering and arrows shall be of the plastic snap on type, Seton nameplate "setmarks", or equal, or they shall be formed by stenciling in an approved manner using white or black as directed and shall have an overall height in inches in accordance with the following table:

Diameter of Pipe or Pipe Covering	Height of Lettering
3/4 to 1-1/4 inches	1/2-inches
1-1/2 to 2-inches	3/4-inches
2-1/2 to 6-inches	1-1/4-inches
8 to 10-inches	2-1/2-inches
Over 10-inches	3-1/2-inches

B. Identification lettering shall be located midway between color coding bands where possible. Identification lettering and arrows shall be placed as directed by the Engineer, but shall generally be located each fifteen (15) feet in pipe length, and shall be properly inclined to the pipe axis to facilitate easy reading. In the event lettering and arrow identifications are required for piping less than 3/4 inch in diameter, the Contractor shall furnish and attach approved color coded tags where instructed.

C. Piping and Equipment Identification

Service	Legend	Base	Band
Sanitary and Process Drains	Drain	Grey	-
Filtrate	Filtrate Drain	Grey	-
Sludge Digested Primary	DPS	Medium Brown	-
Supernatant	Supernatant	Light Brown	-
Digested Waste Activated Sludge	DWAS	Medium Brown	-
Process Air	Process Air	Dark Green	-
Chlorine Solution	Chlorine Solution	Not Painted	-
Potable Cold Water	Potable Water	Light Blue	-
Potable Hot Water	Potable Water-Hot	Light Blue	-
Nonpotable Water	Nonpotable Water	Purple	-
Nonpotable Water Hydrant	-	Purple	
Seal Water Piping	Seal Water	Light Green	-
Natural Gas Piping	Natural Gas	Safety Orange	-
Caustic Solution	Caustic Solution	Alternating Orange and Yellow Tape	-
Hydrants	-	Red	-
Alum	Alum	Not Painted	-

Sanitary and Process Drains	Drain	356 Dune Brown	-
Filtrate Drains	Filtrate Drain	356 Dune Brown	-
Primary Sludge	Primary Sludge	334 Light Brown	306 Light Grey
Return Activated Sludge	Return Act. Sludge	334 Light Brown	303 Dark Blue
Waste Activated Sludge	Waste Act. Sludge	334 Light Brown	300 Aqua
Thickened Sludge	Thickened Sludge	334 Light Brown	339 Medium Yellow
Scum Piping	Scum	334 Light Brown	305 Olive Green
Service Air	-	365 Vista Green	-
Process Air	Process Air	365 Vista Green	-
Chlorine Gas	Chlorine Gas	319 Light Yellow	-
Chlorine Solution	Chlorine Solution	339 Medium Yellow	-
Spray Piping	-	307 Medium Green	303 Dark Blue
Potable Cold Water	Potable Water	301 Light Blue	-
Potable Hot Water	Potable Water-Hot	303 Dark Blue	-
Nonpotable Water	Nonpotable Water	300 Aqua Green	315 Tile Red
Heating (HVAC) Piping	HVAC	324 Orange	-
Seal Water Piping	Seal Water	336 Jade Green	-
Natural Gas Piping	Natural Gas	315 Tile Red	-
Sump Discharge Piping	Sump Pump Disch.	332 French Grey	-
Dewatering Pump Piping	-	300 Aqua Green	-
Grit Pumping	Grit	300 Aqua Green	315 Tile Red
Caustic Solution	Caustic Solution	-	-
All valves, pumps, motors, hoist and monorails	-	324 Orange	-
Scum Operators, Scum Collectors, Slide Gate Frames and Hose Lines	-	305 Olive Green	-
Hydrants	-	319 Light Yellow	-

[END OF SECTION]

SECTION 15095

VALVES, GENERAL

PART 1 GENERAL

1.01 SCOPE

A. The Contractor shall furnish and install, complete with all assemblies and accessories, all valves shown on the Drawings and specified herein including all fittings, appurtenances and transition pieces required for a complete and operable installation.

B. All valves shall be constructed of first quality materials which have strength, wearing, and corrosion resistance characteristics entirely suitable for the types of service for which the individual valves are designated. Except where noted otherwise, valves designated for water service shall conform to pertinent sections of the latest revision of AWWA C500 Specifications. Cast iron valve bodies and parts shall meet the requirements of the latest revision of ASTM Designation A 126, "Standard Specifications for Gray Iron Castings for Valves, Flanges, and Pipe Fittings, Class B."

C. All valve body castings shall be clean, sound, and without defects of any kind. No plugging, welding, or repairing of defects will be allowed.

D. Valves shall have flanged ends for exposed service and mechanical joint ends for buried service, unless otherwise shown on the Drawings or specified herein. Flanged ends shall be flat faced, 125 lb. American Standard unless otherwise shown or specified in accordance with ANSI B16.1. All bolt heads and nuts shall be hexagonal of American Standard size. The Contractor shall be responsible for coordinating connecting piping. Valves with screwed ends shall be made tight with Teflon tape. Unions are required at all screwed joint valves.

1.02 SUBMITTALS

A. The Contractor shall furnish to the Owner, through the Engineer, a Performance Affidavit where required in individual valve specifications, utilizing the format specified in Section 11000, Equipment General Provisions. Performance tests shall be conducted in accordance with the latest revision of AWWA C500 and affidavits shall conform to the requirements of the Specifications

B. Shop Drawings conforming to the requirements of Section 01300, Submittals, are required for all valves, and accessories. Submittals shall include all layout dimensions, size and materials of construction for all components, information on support and anchoring where necessary, pneumatic and hydraulic characteristics and complete descriptive information to demonstrate full compliance with the Documents. Shop Drawings for electrically operated/controlled valves shall include all details, notes, and diagrams which clearly identify required coordination with the electrical power supply and remote status and alarm indicating devices. Electrical control schematic diagrams shall be submitted with the Shop Drawings for all electrical controls. Diagrams shall be drawn using a ladder type format in accordance with JIC standards. Shop Drawings for pneumatically operated/controlled valves shall include all details, notes, and diagrams which clearly identify required coordination with the compressed air (service air) system and electrical controls.

C. Operation and maintenance manuals and installation instructions shall be submitted for all valves and accessories in accordance with the Specifications. The manufacturer(s) shall delete all information which does not apply to the equipment being furnished.

1.03 Contractor RESPONSIBILITIES

A. The Contractor shall provide the services of a qualified representative of the manufacturer(s) of the equipment named below to check out and certify the installation(s), to supervise the initial operation, and to instruct the Owner's operating personnel in proper operation and maintenance procedures in accordance with the following schedule:

Item	Valve/Operator Type	Minimum On-Site Time Requirements
1.	Automatic Control Check Valve	One (1) 8-hour day
2.	Surge Anticipators	One (1) 8-hour day
3.	Motor Operated Modulating Valves	One (1) 8-hour day
4.	Motor Operated Open-Close Valves (required only if manufacturer is other than for Item 3 above)	One (1) 8-hour day
5.	Pneumatic Hydraulic Cylinder Operated Valves	One (1) 8-hour day

B. Any additional time required to achieve successful installation and operation shall be at the expense of the Contractor. The manufacturer's representative shall sign in and out at the office of the Engineer's Resident Project Representative on each day he is at the project.

C. A written report covering the representative's findings and installation approval shall be mailed directly to the Engineer covering all inspection and outlining in detail any deficiencies notes.

D. The times specified are exclusive of travel time to and from the facility and shall not be construed as to relieve the manufacturer of any additional visits to provide sufficient service to place the equipment in satisfactory operation.

PART 2 PRODUCTS

2.01 FLOW INDICATORS

A. Flow indicators shall be the Akron ball type as manufactured by Brooks Instrument Co., Fischer and Porter, or equal, and shall have bronze bodies, glass dome, and plastic ball.

2.02 CORPORATION STOPS

A. Corporation stops shall be manufactured from cast bronze with machined fitting surfaces, and in accordance with AWWA C 800 latest, in sizes 1 inch up to including 2 inches. The inlet connection shall be AWWA standard corporation stop thread. The outlet connection shall be a packjoint outlet for copper or plastic tubing. Corporation stops with compression joint outlets for copper or plastic tubing shall be Type FB 1102 as manufactured by Ford Meter Box Company, or approved equal.

2.03 FLOOR BOXES

A. Floor boxes shall be provided for all nut operated or floor accessed valves. Floor boxes shall

be of the adjustable, sliding type, cast iron, suitable to withstand heavy traffic, as manufactured by James B. Clow & Sons, Kennedy Valve Mfg. Co., or equal. The covers shall be marked with appropriate designations of piping contents (i.e.: water, sewer) and bases shall be the round type. All nut operated valves in this Section shall be clearly identified by stainless steel or laminated plastic identification tags. The tags shall be permanently affixed to the inside of the floor boxes, under grating, etc. and shall bear the embossed letters which clearly identify each valve by its appropriate designation.

B. Two (2) valve operating wrenches shall be supplied in 4 foot lengths with tee handles for each size nut supplied. Valve wrenches shall be Model No. F 2520 as manufactured by James B. Clow & Sons, Kennedy Valve Mfg. Co., Figure No. 122, or equal.

2.04 VALVE BOXES

A. The Contractor shall furnish and install valve boxes as shown on the Drawings and specified herein.

B. All valve boxes shall be placed so as not to transmit shock or stress to the valve and shall be centered and plumb over the operating nut of the valve. The ground in the trench upon which the valve boxes rest shall be thoroughly compacted to prevent settlement. The boxes shall be fitted together securely and set so that the cover is flush with the finished grade of the adjacent surface. A concrete pad as detailed on the Drawings shall be provided around the valve box, sloped outwards.

C. All valve boxes shall be 2 piece cast iron, sliding type, 5 1/4" shaft, with heavy duty traffic weight collar and the lid marked with the appropriate carrier product (i.e.: WATER). Boxes shall be as manufactured by Clow Corp. No. F 2452, Tyler Corp. Series 6855 or 6865 approved equal. James B. Clow & Sons, Kennedy Valve Mfg. Co., Charlotte Pipe and Foundry Company, or equal.

2.05 STRAINERS

A. Y Strainers shall be Y pattern cast iron body, flanged or screwed ends with stainless steel or Monel, 20 mesh strainers. Strainers shall be 200 psi, cold water service strainers, as manufactured by WATTS, Crane Co., Zurn, or equal.

B. Caustic service Y strainers shall be provided as shown on the drawings. Strainers shall be full port full flow design manufactured of 304 or 316 stainless steel body. Y strainers shall be furnished with flanged ends. The strainer screen shall be 1/32 inch perforation, easily removable, manufactured of the same material as the valve body.

C. Stainless steel Y strainers shall be provided as shown on the drawings. Strainers shall be full port full flow design manufactured of 304 or 316 stainless steel body. Y strainers shall be furnished with flanged ends. The strainer screen shall be 1/32 inch perforation, easily removable, manufactured of the same material as the valve body.

D. PVC and CPVC y-strainers shall be provided in PVC and CPVC piping and as shown on the Drawings. Strainer shall be provided with PVC or CPVC body and end cap, EPDM or Viton seal as required for the chemical service, and 20 mesh screen. Temperature rating shall be 30°F to 140°F, and pressure rating shall be 150 psi @ 70°F, non-shock. PVC and CPVC y-Strainers shall be as manufactured by Asahi/America, Hayward, or equal.

E. Manually cleaned strainers shall be the duplex basket tapered plug type.

1. Strainers 3 inches in diameter and larger shall have flanged ends conforming to ANSI B16.1 125/150 pound standard.

2. Strainers less than 3 inches in diameter shall have screwed end connectors, unless otherwise shown on the Drawings.

3. Strainers shall be constructed with an ASTM A48, Class 30 cast iron body, ductile iron trim, removable 0.045 inch staggered hole perforation, 304 stainless steel filter baskets and gauges on the inlet and outlet.

4. All strainers shall be suitable for 125 psi service.

5. Switching flow from one basket to the other shall be accomplished by moving the handle through a 180□ arc. The switching operation shall not stop flow through the strainer and shall provide for on line removal of either basket with the other basket functional. The plug shall be automatically positioned with integral stops and shall be easily lifted and reseated under pressure.

6. The strainer shall be designed to minimize the possibility of material bypassing the plug while being rotated and to prevent debris from building up under the plug. The strainer covers shall be designed for quick opening with swing away yoke.

7. Each basket compartment shall have a side drain outlet.

8. All strainers shall be provided with support legs.

9. Duplex basket strainers shall be similar to the Model 53BTX as manufactured by Hayward, or equal.

F. PVC and CPVC simplex basket strainers shall be provided in PVC and CPVC piping as shown on the Drawings. 1/2”-4” strainers shall be one-piece molded body with (3) ports to facilitate straight-thru flow pattern or u-shape flow pattern as required. Connections shall be true union type to ease installation/future maintenance. The cover, vent plug, and drain plug shall all be hand-removable, requiring no tools. EPDM or Viton seals shall be used as required for chemical service, and internal baskets shall be 1/32” perforation (20-mesh) for 1/2”-1” sizes, and 1/8” perforation for 1-1/2”-8” sizes. 6” and 8” strainers shall be fabricated construction and shall contain flanged connections as standard. The pressure rating for 1/2”-8” sizes shall be 150 psi @ 70°F, non-shock. Strainers shall be manufactured by Hayward Industrial Products, or equal.

2.06 QUICK DISCONNECT COUPLINGS

A. Quick disconnect type coupling for compressed/service air shall be provided where indicated on the Drawings. Coupling shall provide for instantaneous shutoff in socket end when lines are disconnected. Couplings shall be constructed of 316 stainless steel with a BUNA N O ring and integral safety lock. Couplings shall comply with Military Specification 4109 (interchangeable with standard plug of the same size).

2.07 BACKFLOW PREVENTERS

A. Backflow preventer shall be the size shown on the Drawings and shall be of the double check valve principle. Backflow preventer installation shall include isolation valves and four test cocks, furnished as an assembly. For backflow preventers less than 2-1/2", the installation assembly also shall include a strainer. Isolation valves for backflow preventers shall be ball

valves, except for size 2-1/2" and larger which shall be resilient seat gate valves. Test cocks shall be located as recommended by the manufacturer to facilitate functional testing of the assembly. The backflow preventer shall be a WATTS 709, or equal.

B. Reduced Pressure Backflow Preventer shall be of the size shown on the Drawings, and shall be of the reduced pressure principle type in accordance with AWWA Standards C510 and C511, with two (2) independent operating spring loaded check valves and one (1) spring loaded, diaphragm actuated, differential pressure relief valve shall be installed between the check valves. Backflow preventer shall be bronze body construction, with EPT rubber discs and Buna N and nylon diaphragm. Screws and springs shall be of stainless steel. End connections shall be screwed, unless otherwise specified or shown on the Drawings. Reduced pressure backflow preventer installations shall include isolation valves and four test cocks, furnished as an assembly. For reduced pressure backflow preventers less than 2-1/2" the installation assembly also shall include a strainer. Isolation valves for reduced pressure backflow preventers shall be ball valves, except for sizes 2-1/2" and larger which shall be resilient seat gate valves. Test cocks shall be located as recommended by the manufacturer to facilitate functional testing of the assembly. The reduced pressure backflow preventer shall be as manufactured by Beeco Division, Hersey Products Inc., Aergap Model 6CM, WATTS 909, or equal.

PART 3 EXECUTION

3.01 INSTALLATION

A. Except where noted otherwise herein, all valves shall be installing and tested in accordance with the latest revision of AWWA C500. Before installation, all valves shall be lubricated, manually opened and closed to check their operation and the interior of the valves shall be thoroughly cleaned. Valves shall be placed in the positions shown on the Drawings. Joints shall be made as directed under the Piping Specifications. The valves shall be so located that they are easily accessible for operating purposes, and shall bear no stresses due to loads from the adjacent pipe. The Contractor shall be responsible for coordinating connecting piping.

B. All valves shall be tested at the operating pressures at which the particular line will be used. Any leakage or "sweating" of joints shall be stopped, and all joints shall be tight. All motor operated and cylinder operated valves shall be tested for control operation as directed by the Engineer.

C. Provide valves in quantity, size, and type with all required accessories as shown on the Drawings.

D. Install all valves and appurtenances in accordance with manufacturer's instructions. Install suitable corporation stops at all points shown or required where air binding of pipe lines might occur. Install all valves so that operating handwheels or wrenches may be conveniently turned from operating floor but without interfering with access, and as approved by Engineer. Unless otherwise approved, install all valves plumb and level. Valves shall be installed free from distortion and strain caused by misaligned piping, equipment or other causes.

E. Valve boxes shall be set plumb, and centered with the bodies directly over the valves so that traffic loads are not transmitted to the valve. Earth fill shall be carefully tamped around each valve box to a distance of 4 feet on all sides of the box, or to the undisturbed trench face, if less than 4 feet.

3.02 SHOP AND FIELD TESTING

A. Shop and field testing of valves shall be as follows:

1. Certified factory testing shall be provided for all components of the valve and operator system. Valves and operators shall be shop tested in accordance with the requirements in the latest revision of AWWA C500, including performance tests, leakage test, hydrostatic tests, and proof of design tests. The manufacturer through the Contractor shall submit certified copies of the reports covering the test for acceptance by the Engineer.

2. Shop testing shall be provided for the operators consisting of a complete functional check of each unit. Any deficiencies found in shop testing shall be corrected prior to shipment. The system supplier through the Contractor shall submit written certification that shop tests for the electrical/pneumatic system and all controls were successfully conducted and that these components provide the functions specified and required for proper operation of the valve operator system.

3. The Contractor shall conduct field tests to check and adjust system components, and to test and adjust operation of the overall system. Preliminary field tests shall be conducted prior to start up with final field tests conducted during start up. The factory service representative shall assist the Contractor during all field testing and prepare a written report describing test methods, and changes made during the testing, and summarizing test results. The service representative shall certify proper operation of the valve operator system upon successful completion of the final acceptance field testing.

4. Preliminary and final field tests shall be conducted at a time approved by the Engineer. The Engineer shall witness all field testing.

5. All costs in connection with field testing of equipment such as energy, light, lubricants, water, instruments, labor, equipment, temporary facilities for test purposes, etc. shall be borne by the Contractor. The Contractor shall be fully responsible for the proper operation of equipment during tests and instruction periods and shall neither have nor make any claim for damage which may occur to equipment prior to the time when the Owner formally takes over the operation thereof.

6. Preliminary field tests shall be conducted prior to start up and shall include a functional check of the entire valve operator system and all system components. Preliminary field tests shall demonstrate that the valve operator system performs according to specifications and that all equipment, valves, controls, alarms, interlocks, etc., function properly. The preliminary field test report must be approved by the Engineer prior to conducting final field acceptance tests. Based on results of preliminary field tests, the Contractor shall make any adjustments required to settings, etc., to achieve the required valve closing time and operation specified or otherwise directed by the Engineer.

7. Final field acceptance tests shall be conducted simultaneously with the start up and field testing of the pumps, air compressors, process air blowers, etc. Field tests shall be conducted for the full range of operating modes and conditions specified and as directed by the Engineer. Each of the valves shall be tested at minimum, maximum, and normal head/flow conditions, and under all specified conditions of opening and closing. Performance of pneumatic valves and compressed air system under normal operating conditions and during simulated power failures shall be checked.

8. Field testing shall include optimization of opening and closing times of the valves. The Contractor shall provide the means for accurate measurement of pipeline pressures as directed by the Engineer. Valve opening and closing times shall be adjusted based on

process requirements to optimize operation of the valves. Final valve opening and closing times as determined by field tests shall be approved by the Engineer prior to final acceptance of the system.

[END OF SECTION]

SECTION 15100

VALVE OPERATORS AND ELECTRIC VALVE ACTUATORS

PART 1 – GENERAL

1.01 THE REQUIREMENT

A. Equipment shall be provided in accordance with the requirements of Section 11000, Equipment - General and Section 15000, Basic Mechanical Requirements.

B. Valve operators and electric valve actuators shall be designed to unseat, open or close, and seat the valve under the most adverse operating condition to which the valves will be subjected.

C. Operator mounting arrangements shall be as indicated on the Drawings or as directed by the manufacturer and/or Engineer. There shall be no mounting restrictions on the electric valve actuator.

D. The valve operators and electric actuators shall be the full and undivided responsibility of the valve manufacturer in order to ensure complete coordination of the components and to provide unit responsibility. Electric operators must be mounted and shop tested by valve manufacturer.

1.02 SUBMITTALS

A. The following items shall be submitted in accordance with the Contract Documents and in addition to the submittal requirements specified under Section 11000, Equipment - General:

1. Manufacturer's information and catalog data showing compliance with this specification and a full description of the product.

2. Shop Drawings.

    a. Mounting adapter shop drawings.

    b. Wiring diagrams.

    c. Design calculations.

3. O&M Manuals.

4. Certification that the force required to operate all valves is as specified herein.

5. Shop test certifications, including certification from the valve manufacturer that the valve/actuator assembly was tested at the valve manufacturer’s facility.

1.03 WARRANTY AND GUARANTEE

A. Warranty and Guarantee shall be as specified in Section 11000, Equipment – General with the exception that the warranty period shall be for two (2) years for valves, gearboxes, and actuators.

PART 2 – PRODUCTS

2.01 GENERAL

A. Electric actuators shall be provided where shown on the Drawings.

B. Manual operators shall be provided on all valves which do not receive electric actuators. Manual operator type shall be as specified herein and as shown on the Drawings.

C. Quarter turn valves 8” and greater in size shall have geared operators. Gate valves 14” and greater in size shall have geared operators.

D. Operators/actuators shall be furnished with conservatively sized extension bonnets, extension stems, or torque tubes, and all required appurtenances required for a complete installation. Operators furnished with extension bonnets shall include stainless steel extension stems, or stainless steel torque tubes.

2.02 MANUAL OPERATORS

A. Unless otherwise specified or shown on the Drawings, manual operator type shall be as follows:

1. Buried valves shall be equipped with nut operators, extended stems, and valve boxes. Where the depth of the operating nut is more than 4 feet below finish grade, a valve operator extension shall be provided to bring the operating nut to within 18-24 inches of the surface.

2. Exposed valves up to 6-inch shall be lever operated (except gate valves).

3. Exposed valves 8-inches and larger shall be handwheel operated.

4. Exposed gate valves shall be handwheel operated.

5. Valves with centerline of operator located more than 6-feet above the floor or platform from which it is to be operated shall have a chainwheel operator unless otherwise indicated on the Drawings.

B. Manual operators shall be rigidly attached to the valve body unless otherwise specified or shown on the Drawings.

C. All operators shall turn counter-clockwise to open and shall have the open direction clearly and permanently marked.

D. Valve operators shall be designed so that the force required to operate the handwheel, lever, or chain (including breakaway torque requirements) does not exceed 80 pounds applied at the extremity of handwheel or chainwheel operator. Design pressures for sizing of valve operators shall be the piping test pressure for the piping in which the valve is to be installed.

E. Handwheels for valves operators shall not be less than 12 inches in diameter. The maximum diameter of any handwheel shall not exceed 24".

F. Nut operators shall have standard 2-inch square AWWA operating nuts.

2.03 GEAR OPERATORS

A. The operator shall be cable of withstanding a minimum input torque of 300 ft-lbs. on the operating nuts or a minimum pull of 200 lbs. on the handwheel without damage to the operator components between the input and the stops. Operators on valves 30-inch and larger shall be equipped with an AWWA input shaft stop.

B. Worm gears shall be constructed in accordance AWWA C517/C504 and shall be IP68 rated for continuous duty to 50 feet.

C. Test certificates substantiating AWWA approval shall be submitted with gear operator manufacturer's signature.

D. Operators shall be enclosed in a ductile iron housing with outboard seals to protect the bearings and other internal components. Shaft and quadrant shall be supported on permanently angular contact bearings. Input shaft and fasteners shall be constructed of stainless steel. Gears shall be efficiency optimized, 3-stage gear reduction type.

E. Externally adjustable open and closed position stops shall be provided. The adjustable closed position stop shall be used to set closing torque and provide adjustment to compensate for change in pressure differential or flow direction.

F. Valves and gear actuators for buried or submerged service shall have seals on all shafts and gaskets on the valve and actuator covers to prevent entry of water. Actuators shall be 90% grease filled. Actuator mounting brackets for buried or submerged service shall be totally enclosed and shall have gasket seals.

G. Gears shall include a device for back winding protection to prevent undesirable reverse rotation of the gear train at the extents of travel when holding a residual applied torque.

H. Buried valves shall be provided with an over-torque protection device rated for a minimum shear force trip torque of 450 ft-lbs. Gearbox torque limiter shall be Aunspach Model D87 Torq Master, or approved equal.

I. Gears shall be provided with a nameplate indicating serial number, ratio, and number of turns.

J. Gears shall be Rotork Model IW-RL-MD-RAW or approved equal.

2.04 ELECTRIC VALVE ACTUATORS

A. Electric Actuators shall be open/close service or modulating service as specified.

B. Manufacturers

1. Rotork.

2. Auma.

3. EIM.

4. Or approved equal.

C. Performance Criteria

1. Ambient Temperature Rating: -20 to +158 degrees F.

2. Ambient Humidity: 100 percent.

3. Power Supply: 460-volt, three-phase, 60 Hertz, unless otherwise indicated in the Contract Documents.

4. Control Voltage: 120 VAC, single phase, 60 Hertz.

5. Torques: As determined by valve manufacturer.

6. Duty Cycle: As specified herein.

D. Performance Requirements

1. The actuators shall be designed for indoor and outdoor service and shall be capable of mounting in any position.

2. Torque capacity of the actuators shall be sufficient to operate the valves at the maximum pressure differential, with a safety factor of 1.5. Actuators in modulating service will be selected such that the required dynamic valve torque is no more than 60% of the electric actuator’s maximum rated breakaway of torque.

3. Operating time for full limits of travel shall be not more than 2 seconds per inch diameter of the valve, +/- 50 percent through 20 inches; +/- 30 percent for valves 24 inches and larger. Operating time shall not be less than 60 seconds for all modulating valves.

4. Actuators shall be capable of operating in ambient temperatures ranging from 0 degrees F – 160 degrees F.

5. For open/close (non-modulating) actuators, the gearing, motor and contactor shall be capable of 60 starts per hour without overheating.

6. For modulating actuators, the gearing, motor and contactor shall be capable of 1200 starts per hour without overheating.

E. The actuators shall include, in one integral housing, individual compartments for the motor, gearing, wiring terminals, and control circuits. The terminal compartment shall be separated from the inner electrical components of the actuator by means of a watertight seal. The inner seal shall protect the motor and all other internal electrical elements of the actuator from entrance of moisture and dust when the terminal cover is removed. Double cartridge shaft seals shall be provided on the hand wheel and output shafts for weatherproof protection. All external fasteners shall be stainless steel. Actuators shall be o-ring sealed, watertight to IP66/IP68 21 feet for 72hrs, NEMA 4 or 6, unless otherwise specifed. Actuators located in corrosive areas shall be NEMA 4X. Actuators located in classified areas shall be NEMA 7 suitable for use in Class 1, Division 1 or 2, Group D environments.

F. The actuators shall be provided with externally operable and lockable 480VAC circuit breakers integral to the control housing. Disconnect shall be minimum 16 amp, fused, with a stainless steel enclosure. Disconnect switch shall be shipped separate and loose from the actuator.

G. All gearing shall be hardened alloy steel or bronze and shall be rated at twice the output torque of the operator and shall be designed to withstand the stall torque of the motor without failure. Output drive gearing shall consist of a worm shaft and worm gear pinion operating in an oil bath. The worm gear pinion shall be alloy bronze. Worm gear drive shall be self-locking to prevent creeping of the valve disc in an intermediate position. Heavy-duty grease shall protect gearing and sealed ball bearings of the main shaft for five years without changing. Motor reduction gearing shall be spur or planetary gearing and shall allow for field repair and change in gear ratio. For quarter turn applications, overtravel of the operator shall be prevented by internal mechanical stops cast into the actuator.

H. A mechanical dial position indicator shall be furnished to continuously indicate the position of the valve at and between the fully open and fully closed positions. The indicator shall be driven by gearing driven off of the main worm gear pinion and shall operate when the actuator is in either the electrical mode or manual mode.

I. A handwheel shall be permanently attached for manual operation. A gear assembly shall be provided between the handwheel and the worm shaft if required to reduce the force necessary to operate the handwheel to less than 40 pounds. A positive declutch mechanism shall engage the handwheel when required. When the actuator is set in the declutched position for handwheel operation, it shall return automatically to electric

operation when actuator motor is energized. The handwheel shall not rotate during electric operation nor shall a fused motor prevent handwheel operation.

J. The drive motor shall be specifically designed for actuator service and shall be characterized by high starting torque and low inertia. Motors shall be reversible squirrel cage AC induction type motors and shall be specifically designed for open/close or modulating service where required. DC motor actuators with integral gearing, will not be accepted. Motors shall be totally enclosed, non-ventilated, with NEMA Class F insulation minimum (Class H for modulating actuators) and a maximum continuous temperature rating of 120 degree C (rise plus ambient). The electric motor shall have a time rating of at least 15 minutes at 104°F (40°C) or twice the valve stroking time, whichever is longer, at an average load of at least 33% of maximum valve torque. Motor bearings shall be permanently lubricated by premium lubricant. The motor shall have plug and socket electrical connection or hardwired. The actuator shall include a device to ensure that the motor runs with the correct rotation for the required direction of valve travel with either phase sequence of the three-phase power supply connected to the actuator. The motor shall include single phase protection. A suitable thermal protection device shall be incorporated in the motor or motor starter circuits, connected to a tripping device. Fast acting fuses shall be provided to protect solid state components. The motor shall be capable of starting against the rated load in either the open or close direction when voltage to the motor terminals is plus or minus ten (10) percent of nameplate rating.

    1. Open/Close actuators shall be furnished with electro-mechanical reversing starters.

    2. Modulating actuators shall be furnished with solid state reversing starters utilizing thyristors.

K. Leads from the motor shall be brought to the control circuit (limit switch) compartment without external piping or conduit box. The following items shall be located in the control circuit compartment.

    1. Torque limit switches shall be provided to de-energize the motor control circuit in the event of a stall when attempting to unseat a jammed valve and when torque is exceeded during valve travel. Each actuator shall have an open direction torque switch and a close direction torque switch. The torque switches shall be mechanically operated and able to be set in torque units. Torque switches shall be calibrated prior to the actuator's assembly to the valve.

    2. Travel limit switches shall be provided to de-energize the motor control circuit when the actuator reaches the limits of travel in the open and close directions. The limit switch drive shall be of the counter gear type and "in step'" with the actuator output drive at all times in either the electrical or manual mode of operation. A minimum of six (6) contacts, three (3) normally open and three (3) normally closed, shall be supplied at each end of valve travel. Four (4) additional

contacts shall be provided to report end of travel or any desired position between ends of travel.

L. Modulating actuators shall have a position feedback potentiometer mounted directly to the valve actuator gearing inside the gearing compartment. The potentiometer shall provide a 4-20 mA signal corresponding to valve position. Modulating valve actuators shall be designed to respond to either a 4-20mADC analog signal.

1. Modulating valve actuators designed to respond to a 4-20mADC signal shall be provided with a valve positioner which shall position the valve proportional to an externally generated 4-20mADC signal. The valve positioning control circuitry shall position the valve by comparing the command signal with the present valve position as indicated by the feedback potentiometer. The positioner shall be field adjustable to fail to the “open,” “closed,” or “last” position on loss of 4-20 mADC command signal.

M. The electrical terminals shall be housed in a double sealed terminal compartment isolated from the rest of the actuator components. The actuators shall be furnished with fuses inside of the terminal compartment. A quantity of two – ¾ inch NPT conduit entries shall be furnished.

N. Actuators shall contain wiring and terminals for the following control functions. All dry contacts shall be rated for 5A at 250VAC.

1. Open, Close, and Stop commands from external dry contacts (utilizing internal 120VAC power supply) and/or from an external signal of 12V to 120V. The inputs for the open, close, stop signals shall be field selectable to be respond to either maintained or momentary remote signals. In momentary mode, the actuator shall have internal latching circuitry that causes the operator to drive the valve to its limit of travel upon receipt of the momentary contact signal unless a stop signal is received.

2. Emergency override input from a normally closed or normally open contact. The actuator shall either open or close (field selectable) upon receiving the emergency override input.

3. Provide remote Local-Off-Remote selector switch, Open/Close pushbuttons, and Open/Closed pilot lights for a remote manual control station. The remote Local-Off-Remote selector switch and Open/Close pushbuttons shall be a dry contact input to the actuator control circuitry. The Open/Closed pilot lights shall be powered from the valve actuator control power.

4. Four (4) unpowered contacts shall be provided which can be selected to indicate valve “Opened” and “Closed” position, “Remote” status of the actuator, and fail status of the actuator. The fail status contacts shall activate upon motor overtemperature and actuator overtorque as a minimum.

5. Terminals for 4-20mADC position command and 4-20mADC position feedback as described above for modulating actuators.

O. Local Controls

1. Actuators shall be furnished with a Local-Off-Remote selector switch; Open, Close, and Stop pushbuttons for local control; a red lamp indicating closed and a green lamp indicating open. L-O-R switch shall be padlockable in any of the three positions.

    a. When the LOR is in the “Local” position, open/close control shall be by the open and close pushbuttons on the actuator. The stop push button shall stop the actuator travel.

    b. When the LOR is in the “Off” position, the actuator shall not operate.

    c. When the LOR is in the “Remote” position, the actuator shall be controlled by remote inputs from the PLC or from the remote manual controls station.

2. The local controls shall be arranged so that the direction of travel can be reversed without the necessity of stopping the actuator.

P. Remote Manual Control Station

1. Where indicated on the Drawings, provide remote manual control station with a self-contained, double sealed enclosure. NEMA rating shall match that of the actuator.

2. Actuators shall have the capability of being provided with a remote manual control station, which is a “mirror image” of the actuator face

3. Remote manual control station shall be suitable for remote connection to an electric actuator located up to 325 feet away.

4. Remote manual control station shall provide local control functionality and shall include a backlit LCD display and terminals for connecting the remote manual control station to the host actuator.

5. Adjustments to the actuator configuration settings shall not require removal of any covers and shall be capable of being accomplished using a Bluetooth wireless interface.

6. Where indicated on the Drawings, manual actuator controls shall be furnished in a separate NEMA 4X stainless steel enclosure (NEMA 7 if located in a classified area).

2.05 NAMEPLATES

A. Nameplates shall be provided on each item of equipment. Equipment nameplates shall be type 316 stainless steel bearing the equipment name and equipment number legibly engraved in 3/4 inch high letters. Nameplates shall be attached to the equipment in an accessible location with stainless steel screws.

2.06 PAINT

A. Actuator shall be factory coated in accordance with the manufacturer's standard paint system.

2.07 SPARE PARTS

A. Provide spare parts as recommended by manufacturer.

PART 3 – EXECUTION

3.01 MANUFACTURER'S FIELD SERVICES

A. The services of a qualified manufacturer's technical representative shall be provided in accordance with Section 11000 – Equipment - General and shall include the following site visits for electric actuators:

Service	Number of Trips	Number of Days/Trip
Installation and Testing	1	1
Startup and Training	1	1

3.02 INSTALLATION

A. All valve actuators shall be installed in accordance with the manufacturer's published recommendations and the applicable Specification Sections for valves.

3.03 SHOP TESTING

A. Shop testing shall be in accordance with Section 11000, Equipment - General and with the following additional requirements:

1. Test each valve actuator in manufacturer's shop in conformance with AWWA C542.

2. Conduct a complete functional check of each unit. Correct any deficiencies found in shop testing prior to shipment.

3. Submit written certification that:

a. Shop tests for the electrical system and all controls were successfully conducted;

b. Electrical system and all controls provide the functions specified and required for proper operation of the valve operator system.

4. Each actuator shall be performance tested and individual test certificates shall be supplied. The test equipment shall simulate each typical valve load and the following parameters should be recorded:

a. Current at maximum torque setting.

b. Torque at maximum torque setting.

c. Flash Test Voltage.

d. Actuator Output Speed or Operating Time.

e. In addition, the test certificate should record details of specification, such as gear ratios for both manual and automatic drive, closing direction, and wiring diagram code number.

f. Verification of actuator torque rating with valve.

3.04 FIELD TESTS

A. Field testing shall be in accordance with Section 11000, Equipment - General and with the following additional requirements:

1. Valve actuators shall be field-tested together with the associated valves.

2. Test all valves at the operating pressures at which the particular line will be used.

3. Test all valves for control operation as directed.

4. Field testing shall include optimization of opening and closing times of the valves. Valve opening and closing times shall be adjusted based on process requirements to optimize operation of the valves. Final valve opening and closing times as determined by field tests shall be approved by the Engineer prior to final acceptance of the system.

B. Preliminary Field Tests

1. General: Preliminary field tests shall be conducted prior to start-up and shall include a functional check of the entire valve operator system and all system components.

2. Scope: Preliminary field tests shall demonstrate that the valve operator system performs according to specifications and that all equipment, valves, controls, alarms, interlocks, etc., function properly.

3. Based on results of preliminary field tests, the Contractor shall make any adjustments required to settings, etc., to achieve the required valve closing time and operation, as specified or otherwise directed.

C. Final Field Tests

1. Final field tests shall be conducted in accordance with the latest revision of AWWA C542.

2. Final field tests shall be conducted for the full range of operating modes and conditions specified and as directed by the Engineer. Each of the valves shall be tested at minimum, maximum, and normal head/flow conditions, and under all specified conditions of opening and closing.

3. Certification of Equipment Compliance: After the final field tests are completed and passed, submit affidavit according to Section 11000, Equipment - General.

[END OF SECTION]

SECTION 15101

BUTTERFLY VALVES

PART 1 – GENERAL

1.01 THE REQUIREMENT

A. Reference Section 15000 – Basic Mechanical Requirements.

1.02 SUBMITTALS

A. Submittals shall be in accordance with submittal requirements of the Contract Documents and Section 11000, Equipment – General. In addition to any relevant submittal requirements within these Sections, the following shall also be submitted:

1. Shop drawings and dimensional information including valve lay length.
2. Performance and leak shop test results.
3. Equipment literature and cut sheets.
4. Statement of compliance with AWWA C504.
5. Warranty information.
6. Operation and maintenance manuals.

1.03 REFERENCES

A. American Bearing Manufacturers Association (ABMA).

B. ANSI B16.1, Cast-Iron Pipe Flanges and Flanged Fittings.

C. ANSI B16.34, Valves-Flanged, Threaded and Welding end. (ASME B16.34).

D. API STD 609, Butterfly Valves: Double Flanged, Lug-Type and Wafer-Type.

E. ASTM A126, Specification for Gray Iron Castings for Valves, Flanges and Pipe Fittings.

F. ASTM A536, Specification for Ductile Iron Castings.

G. AWWA C504, Rubber-Seated Butterfly Valves.

H. AWWA C550, Protective Interior Coatings for Valves and Hydrants.

I. AWWA Manual M49, Butterfly Valves: Torque, Head Loss, and Cavitation Analysis.

PART 2 – PRODUCTS

2.01 BUTTERFLY VALVES (LIQUID SERVICE)

A. Butterfly valves shall be of the rubber-seated, bi-directional, tight-closing type conforming to the latest revision of AWWA C504. The manufacturer shall have a minimum of 5 years of experience in manufacturing butterfly valves of the sizes required in accordance with AWWA C504. All butterfly valves shall be the product of one manufacturer.

B. Butterfly valves shall be as manufactured by:

1. DeZurik Model BAW
2. Pratt
3. Mueller Co.
4. GA Industries
5. Or approved equal.

C. Materials of Construction

Materials of Construction Schedule

Component	Materials of Construction
Valve Body	Cast Iron ASTM A 126, Grade B, ASTM A 48, Class 40 or Ductile Iron ASTM A536, Grade 65 45 12
Valve Disc	Ductile Iron, ASTM A536, Grade 65-45-12
Valve Shaft	Type 316 Stainless Steel
Shaft Seal	Grade E Bronze, ASTM B505 copper alloy UNS #C93200
Disc Trim	Type 316 Stainless Steel or Monel
Seat and O-rings	EPDM or other synthetic rubber suitable for the application
Fasteners and Hardware	Type 316 Stainless Steel

D. Each valve shall be performance and leak tested as specified in AWWA C504 revised as follows: In addition to the testing requirements of AWWA C504, each butterfly valve shall be thoroughly cleaned and opened and closed at least three (3) times prior to testing. Certified copies of the test results shall be submitted to the Engineer for approval prior to shipment of the valve.

E. Butterfly valves shall be Class 150B, unless otherwise indicated, and of the short body design with mechanical joint or flanged ends, as shown on the Drawings. Flanged end

valves shall include 125 lb. flanged ends faced and drilled per ANSI B16.1 standard for cast iron flanges. Mechanical joint ends shall meet the requirements of AWWA C111/ANSI A21.11.

F. Where required to meet design operating conditions, valve bodies shall be manufactured of higher strength materials. Valve bodies shall have integral hubs for housing shaft bearings and seals.

G. Butterfly valves shall be of the concentric or eccentric shaft types. Valve discs shall provide a full 360-degree seating surface with no external ribs transverse to flow, and shall comply with the latest revision of AWWA C504. The valve manufacturer shall furnish Shop Drawings which include end clearance dimensions when the disc is in the fully open position.

H. The resilient valve seat shall be designed to seat against a pressure differential of 150 psi on either side of the valve, unless otherwise indicated. The seat shall be molded in and vulcanized to the valve body and shall fully encapsulate interior of valve body, fully rubber lined valve.

1. The seats shall be factory tested according to AWWA C504 at a test pressure of 150 psig, unless otherwise indicated, and post adjusted for differential pressures indicated herein.

2. Compression between the seat and disc edge shall be adjustable from both the upstream and downstream side of the valve disc and the seat shall be field replaceable without disassembly of the disc and shaft.

3. Seat shall withstand 75lb per inch pull when tested in accordance with ASTM D429, Method B.

I. Valve shafts shall be one-piece or two-piece units suitably sized to transmit the torques required to operate the valves under the conditions listed in the valve schedule with appropriate safety factor. Shafts shall be securely attached to valve disc by means of conservatively sized corrosion-resistant taper pins, threaded at one end and secured with lockwashers and nuts (i.e., mechanically attached). Provide O-ring seal on taper pin if required to prevent leakage. Shaft key shall be constructed of corrosion-resistant material.

J. Shaft bearings shall be contained in the integral hubs of the valve body and shall be the permanently self-lubricated, corrosion resistant, sleeve type of teflon or heavy-duty bronze. The valve assembly shall be furnished with a factory set two-way thrust bearing designed to center the valve disc in the valve seat at all times. End cover bolts shall be of stainless steel construction.

K. The shaft seal shall be either the cartridge type with at least two O-rings, monolithic V-Type, U-Cup Type, or pull down packing type.

1. If monolithic V-Type, U-Cup Type, or pull down packings are utilized, it shall be self-adjusting, self-compensating type. Packing shall be as manufactured by Chevron, or equal. Butterfly valves with pull down packings shall be designed with an extension bonnet so that repacking can be done without removal of the actuator. For buried valves with pull down packing the packing gland cover assembly shall be heavy duty, soil and water resistant. Stuffing boxes for pull down packing shall have a depth sufficient to accept at least four rings of self-compensating type packing specifically selected for the operating pressures to be encountered.

2. The "O" ring type shaft seal shall be contained in a removable bronze cartridge. The cartridge materials shall meet the requirements of AWWA C504 for bronze, Grade E. The "O" ring material shall compatible for use with reclaimed water or wastewater and per ASTM D-2000 with a hardness of 70 Shore A Durometer.

L. Manual operators for butterfly valves 18-inches in diameter or larger shall be the worm gear type conforming to AWWA C504. Manual operators for butterfly valves mounted above 6 feet from the operating floor shall be equipped with worm gear chainwheel actuators. Operators shall be equipped with adjustable AWWA limit stops, shall be sized according to Table IV for Class 150B, and shall require a minimum of 15 turns for 90 degrees or full stem valve travel. The capacity of the manual operator shall be adequate to drive the valve under the differential pressure of 150 psi and maximum anticipated flow, unless otherwise indicated.

1. Worm gears shall be constructed in accordance with AWWA C504 and shall be IP68 rated continuous duty to 50ft. Gears shall incorporate backwinding protection to prevent undesired reverse rotation of the gear train at the extents (i.e. fully closed position) of travel when holding a residual applied torque. Output shaft of gearbox shall be a splined connection to operating nut. Gears shall be able to be mounted on valves at 90 degrees or 270-degree positions. Gearbox handwheel shall not interfere with valve body or other components.

M. The manufacturer shall certify that the butterfly valves are capable of operating in continuous duty service under the design test pressures and design flow conditions.

N. All external ferrous components and surfaces of the valves, with the exception of stainless steel and finished or bearing surfaces, shall be shop painted in accordance with AWWA C504 with two coats (10 mils min. dry film thickness) of the manufacturer's premium epoxy for corrosion resistance. Damaged surfaces shall be repaired in accordance with the manufacturer's recommendations.

O. Valves shall be coated inside. Steel, cast-iron, and ductile iron surfaces, except machined surfaces, shall be epoxy-coated in accordance with AWWA C550.

P. Valve shall include equipment tag that indicates direction of flow.

PART 3 – EXECUTION

3.01 INSTALLATION

A. Install butterfly valves in accordance with the manufacturer's instructions and requirements of applicable AWWA standards.

B. Install valves plumb and level. Install all valves to be free from distortion and strain caused by misaligned piping, equipment, and other causes.

C. Position butterfly valves so that, when valve is fully open, valve disc does not conflict with piping system elements upstream and downstream of valve.

D. Exposed Valves:

1. Provide supports for large or heavy valves and appurtenances as shown or required to prevent strain on adjoining piping.

E. Operators:

1. Install valves so that operating levers can be conveniently turned from operating floor without interfering with access to other valves, piping, structure, and equipment, and as approved by Engineer.

2. Avoid placing operators at angles to floors or walls.

3. Orient chain operators out of way of walking areas.

4. Install valves so that indicator arrows are visible from floor level.

5. For motor-operated valves located lower than five feet above operating floor, orient motor actuator to allow convenient access to pushbuttons and handwheel.

[END OF SECTION]

SECTION 15104

BALL VALVES

PART 1 – GENERAL

1.01 THE REQUIREMENT

A. Reference Section 15000 – Basic Mechanical Requirements.

B. Valves required for chemical service shall be constructed of materials suitable for the intended service.

1.02 SUBMITTALS

A. Submittals shall be in accordance with submittal requirements of Contract Documents and Section 11000, Equipment – General. In addition to any relevant submittal requirements within these Sections, the following shall also be submitted:

1. Shop drawings and dimensional information including valve lay length.

2. Performance and leak shop test results.

3. Equipment literature and cut sheets.

4. Statement of compliance with AWWA C507.

5. Warranty information.

6. Operation and maintenance manuals.

1.03 REFERENCES

A. American Bearing Manufacturers Association (ABMA).

B. ANSI B16.1, Cast-Iron Pipe Flanges and Flanged Fittings.

C. ANSI B16.34, Valves-Flanged, Threaded and Welding end. (ASME B16.34).

D. ASTM A126, Specification for Gray Iron Castings for Valves, Flanges and Pipe Fittings.

E. ASTM A536, Specification for Ductile Iron Castings.

F. AWWA C507, Ball Valves, 6-inch through 48-inch.

G. AWWA C550, Protective Interior Coatings for Valves and Hydrants.

PART 2 – PRODUCTS

2.01 BALL VALVES

A. Ball valves shall be of the full port, single seated, metal to metal seated, tight-closing type conforming to the latest revision of AWWA C507 Specifications. The manufacturer shall have a minimum of 5 years of experience in manufacturing ball valves of the sizes required in accordance with AWWA C507 Specifications. All ball valves shall be the product of one manufacturer.

B. Ball valves shall be as manufactured by:

1. Dezurik (Willamette)

2. Or approved equal.

Materials of Construction Schedule

Component	Materials of Construction
Valve Body	Cast Iron ASTM A 48, Class 35 or Ductile Iron ASTM A536 GR 65-45-12
Ball	Cast Iron ASTM A48, Class 35
Trunnions	Bronze
Body Seats	400 Series Monel
Ball Seats	ASTM A276, Type 316 Stainless Steel
Shaft	17-4P Stainless Steel or Chrome Molybdenum Steel, ASTM A 322 Grade 4140
Seat and O-rings	EPDM or Buna-N
Fasteners and Hardware	Type 316 Stainless Steel
Torque Unit Components	As specified herein

C. Each valve shall be performance and leak tested as specified in AWWA C507 revised as follows: In addition to the testing requirements of AWWA C507, each ball valve shall be thoroughly cleaned and opened and closed at least three (3) times prior to testing. Certified copies of the test results shall be submitted to the Engineer for approval prior to shipment of the valve.

D. Ball valves shall be AWWA Class 150, unless otherwise indicated in the valve schedules, design with flanged ends, and installed as shown on the Drawings.

E. The valve body shall be constructed of epoxy coated cast or ductile iron with a full, unrestricted circular inlet and outlet, with nominal opening diameter equal to the rated size of the valve.

F. Each valve body shall be provided with flanged ends conforming in diameter and drilling to ANSI B16.1, Class 125. All flanges shall be flat faced and finished to true plan surfaces within a tolerance limit of 0.005 inch. Each flange face shall be perpendicular to the longitudinal axis of the valve within a maximum angular variation tolerance of 0.002 inch per foot of flange diameter. Flange faces shall have concentric or spiral serrated finish.

G. The body shall provide rigid means for supporting the valve operating mechanism without the necessity of additional supports and shall be of such design that it shall be capable of receiving the complete ball sub assembly. The valve body shall have integral hubs for housing shaft bearings and seals.

H. The body shall have a rigidly attached metal seat. The body seat shall be machined, ground, and polished for contact with the seat mounted on the ball.

I. The ball shall be constructed of epoxy coated cast iron in accordance with AWWA C507 and with a full unobstructed, circular waterway with a diameter equal to the rated size of the valve. It shall have trunnion supports cast integral on the axis of rotation. An extension of one trunnion, called the operating shaft, shall pass through a shaft seal chamber and connect to the valve operation mechanism.

J. The plug shall have a stainless steel seat mounted thereon which shall properly align with the body seat when the valve is in the closed position. The surfaces of the seat ring shall be spherically generated and shall be machined, ground, and polished for contact with the body seat.

K. The plug trunnions shall be fitted with bronze bearings of sufficient difference in hardness from the body bushings to eliminate seizing and galling.

L. Bearing pressure shall not exceed 1500 psi at full differential pressure of 150 psi. Valve designs employing Teflon coated or other non-metallic bearing material will not be acceptable.

M. Bearings shall be machined in accurate alignment for reception of the valve ball trunnions.

N. Valve shafts shall be integral with the ball and shall connect the ball to the torque unit. The shaft shall be suitably sized to transmit the torques required to operate the valves under the conditions specified with appropriate safety factor. Shafts shall be securely attached to valve plug by means of conservatively sized corrosion-resistant taper pins, threaded at one end and secured with lockwashers and nuts (i.e.: mechanically attached). Provide O-ring seal on taper pin if required to prevent leakage. Shaft key shall be constructed of corrosion-resistant material.

O. Shaft bearings shall be contained in the integral hubs of the valve body and shall be the permanently self-lubricated, corrosion resistant, sleeve type of heavy-duty bronze. The valve assembly shall be furnished with a factory set thrust bearing designed to center

the valve plug in the valve seat at all times. End cover bolts shall be of stainless steel construction.

P. A shaft seal shall be provided of the type utilizing a plug shaft stuffing box, four (4) "O" ring seals, a bronze retainer, and a corrosion resistant steel lock ring.

Q. Manual operators for ball valves 18-inches in diameter or larger shall be the worm gear or travelling nut type conforming to AWWA C507. Manual operators for ball valves mounted above 6 feet from the operating floor shall be equipped with worm gear chainwheel actuators. Operators shall be equipped with adjustable AWWA limit stops and shall require a minimum of 15 turns for 90 degrees or full stem valve travel. The capacity of the manual operator shall be adequate to drive the valve under the differential pressure of 150 psi and maximum anticipated flow, unless otherwise indicated in the appropriate valve schedule. Provide electric motor operators where required and in accordance with Section 15100 – Valve Operators and Electric Valve Actuators.

R. The torque unit (valve operating mechanism) shall be of the traveling-nut type and shall be a product of the valve manufacturer. The assembly shall be mounted and attached to the valve body. The torque unit shall be designed to accept a manual, cylinder, or electric motor actuator. The torque unit housing shall employ the following:

1. A traveling crosshead to impart positive rotary movement to the plug which will move transversely to the valve shaft.

2. A cylinder piston rod or stainless steel Type 416 threaded leadscrew (reach rod or stem) with the crosshead directly attached thereto.

3. A rotator lever (of cast steel construction).

4. A matched set of interconnecting links (of cast steel construction) connecting the traveling crosshead to the rotator lever.

S. The traveling crosshead shall be confined to permit linear motion only and to prevent it from any tendency to rotate due to linkage reaction. A plug shaft support bearing shall be supplied on the cover.

T. The torque unit shall be so designed that during the first 50 percent of stroke in closing the flow area is reduced by approximately 81 percent. The remaining 19 percent of flow area shall be gradually reduced to a complete shutoff throughout the last 50 percent of the closing stroke.

U. The torque unit shall be totally enclosed in a suitable housing with a removable cover and shall be capable of being inspected, lubricated, adjusted and repaired without interfering with or removing the valve from the line and shall be permanently lubricated. All parts shall be of first class workmanship, easily replaceable, and manufactured of materials suited for the purpose. All parts subject to rubbing shall be of significantly

different hardness to prevent galling and shall be sized to result in a maximum bearing stress at full load of 2,000 psi. The main shaft shall be replaceable without removing the torque unit housing and while the valve is in the line under pressure.

V. The manufacturer shall certify that the ball valves are capable of operating in continuous duty service under the working and test pressures and design flow conditions.

W. Each valve shall by hydrostatically tested and tested for bubble tightness after the operator has been mounted and adjusted. Copies of the hydrostatic and leakage test certification and certification of conformance shall be submitted to the Engineer prior to shipment.

X. All internal and external ferrous components and surfaces of the valves, with the exception of stainless steel and finished or bearing surfaces, shall be shop painted with two coats (10 mils min. dry film thickness) of the manufacturer's premium epoxy for corrosion resistance. Damaged surfaces shall be repaired in accordance with the manufacturer's recommendations.

PART 3 – EXECUTION

3.01 INSTALLATION

A. Install ball valves in accordance with the manufacturer’s instructions and requirements of applicable AWWA standards.

B. Install valves plumb and level. Install all valves to be free from distortion and strain caused by misaligned piping, equipment, and other causes.

C. Exposed Valves:

1. Provide supports for large or heavy valves and appurtenances as shown or required to prevent strain on adjoining piping.

D. Operators:

1. Install valves so that operating levers can be conveniently turned from operating floor without interfering with access to other valves, piping, structure, and equipment, and as approved by Engineer.

2. Avoid placing operators at angles to floors or walls.

3. Orient chain operators out of way of walking areas.

4. Install valves so that indicator arrows are visible from floor level.

5. For motor-operated valves located lower than five feet above operating floor, orient motor actuator to allow convenient access to pushbuttons and handwheel.

[END OF SECTION]

SECTION 15105

CHECK VALVES

PART 1 – GENERAL

1.01 THE REQUIREMENT

A. Reference Section 15000 – Basic Mechanical Requirements.

B. Valves shall be constructed of materials suitable for the intended service and compatible with wastewater and reclaimed water with a chlorine residual.

PART 2 – PRODUCTS

2.01 SWING CHECK VALVES ≤ 3-INCH (LIQUID SERVICE)

A. Unless otherwise specified, check valves 3-inches and less shall be bronze, Y-pattern, swing check valves of the regrinding type.

B. Valves shall have a minimum 200 psi non-shock cold water pressure rating.

C. Valves shall be as manufactured by:

1. Jenkins Bros. Corp.

2. Crane Company.

3. Or approved equal.

2.02 RUBBER FLAPPER SWING CHECK VALVES > 3-INCH (LIQUID SERVICE)

A. Check valves larger than 3-inches shall be rubber flapper swing check valves conforming to the latest revision of AWWA C508 Specifications. The manufacturer shall have a minimum of 5 years of experience in manufacturing check valves of the sizes required in accordance with AWWA C508 Specifications. All check valves shall be the product of one manufacturer.

B. Check valves shall be:

1. Dezurik/APCO Model CRF.

2. Or approved equal.

a. Check valve designs vary with respect to lay length. Contractor shall be responsible for design modifications and alterations in the Work required to accommodate check valves that differ in dimension or other characteristics.

C. Materials of Construction

Materials of Construction Schedule

Component	Materials of Construction
Body and Cover	Cast Iron, ASTM A 126, Grade B or Ductile Iron ASTM A 536 Grade 65-45-12
Ball	Cast Iron ASTM A48, Class 35
Body Plug	Iron ATSM A 48, Class 40
Rubber Flapper and O-ring	Nitrile or other synthetic rubber suitable for the application
Bolts, Fasteners, and Hardware	Type 316 Stainless Steel
Compression Spring	Type 316 Stainless Steel

D. Each valve shall be performance and leak tested as specified in AWWA C508. Certified copies of the test results shall be submitted to the Engineer for approval prior to shipment of the valve.

E. Check valves shall be Class 150B, unless otherwise indicated, with mechanical joint or flanged end connections, as shown on the Drawings.

F. Body seat shall be on a 45-degree angle to the centerline of the pipe and possess non-slam characteristics.

G. Valve shall be rated for a minimum cold working pressure of 175 psi.

H. Valve design shall be such that flapper does not swing from a hinge pin, but rather flexes open. The flapper shall be captured between the body and valve cover to permit the disc to flex open and closed. Disc design shall provide for positive sealing.

I. Hinge section of the rubber flapper shall be designed to accelerate closing due to an elastic spring effect. High-strength fabric shall be integrally molded into the rubber over the disc and bar to form a flexible joint giving the flapper a high cycle life.

J. Internal flow area of valve body shall be elastomer lined for resistance to abrasion.

K. With the exception of the valve body and seat, all parts in contact with liquid shall be manufactured from noncorrosive materials. Internal corrosive surfaces shall be shop painted with two coats of epoxy for corrosion resistance. Exterior surfaces shall be painted in accordance with the requirements of Section 09900 – Painting.

L. External Spring Adjustment

1. Valves shall be provided with externally adjustable spring return that accelerates flapper closure before flow reversal can occur.

2. Helical compression spring shall be externally adjustable without removing the cover from the valve or removing the valve from service.

PART 3 – EXECUTION

3.01 INSTALLATION

A. Install check valves in accordance with the manufacturer's instructions and requirements of applicable AWWA standards.

B. Install valves plumb and level. Install all valves to be free from distortion and strain caused by misaligned piping, equipment, and other causes.

C. Position butterfly valves so that, when valve is fully open, valve disc does not conflict with piping system elements upstream and downstream of valve.

D. Exposed Valves:

1. Provide supports for large or heavy valves and appurtenances as shown or required to prevent strain on adjoining piping.

[END OF SECTION]

SECTION 15107

FIRE HYDRANTS

PART 1 – GENERAL

1.01 THE REQUIREMENT

A. Reference Section 15000, Basic Mechanical Requirements.

PART 2 – PRODUCTS

2.01 FIRE HYDRANTS

A. Fire hydrants shall be in accordance with the latest versions of Pinellas County Standard Engineering Details and Pinellas County Material Specification Manual.

B. Inlet shall be 6-inch mechanical joint.

C. Main valve opening of the hydrant shall not be less than 5-1/4”.

D. Hydrant nozzles shall include two (2) hose nozzles and one (1) pumper nozzle.

E. Hydrant shall be painted chrome yellow with white bonnet dome.

F. Approved products:

1. American AVK Nostalgic 2780 Series.
2. American Flow Control B-84-B.
3. American Flow Control Waterous Pacer.
4. Clow Medallion.
5. Kennedy Gardian K81-D.
6. Mueller Super Centurion A-423.
7. US Pipe Metropolitan M-94.

PART 3 – EXECUTION

3.01 INSTALLATION

A. Install hydrants in accordance with Section 15000, Basic Mechanical Requirements and the manufacturer’s instructions.

[END OF SECTION]

SECTION 15108

GATE VALVES (INCLUDING KNIFE GATE VALVES)

PART 1 GENERAL

1.01 SCOPE

A. Reference Section 15000, Basic Mechanical Requirements.

PART 2 PRODUCTS

2.01 GATE VALVES

A. All gate valves between 2 inches and less than 4 inches shall be iron body, bronze trimmed, wedge disc, and minimum 150 psi non shock cold water pressure rating. Exposed valves shall be of the outside screw and yoke (OS&Y), ANSI B 16.1, 125 pound flanges and shall be as manufactured by the Crane Company, Jenkins Bros. Corp., or equal.

B. Valves less than 2 inches shall be of bronze body, rising stem, wedge disc and minimum 300 psi non shock cold water pressure rating. Valves shall have screwed ends or as specified otherwise.

C. Gate valves 4 inches through 16 inches shall be of the non-rising stem design, shall fully comply with the requirements of AWWA C509 for resilient seated gate valves and shall be the Iowa Valve Co., Mueller Co., Crane Co., or equal.. Gate valves shall be designed for a minimum working pressure of 250 psi and a test pressure of 500 psi.

D. Gate valve body and bonnet shall be cast iron conforming to ASTM A126, Class B with resilient seat gate and O ring seals. The gate shall be cast iron with a vulcanized rubber coating with no metal to metal contact when in the fully closed position and a smooth unobstructed waterway when in the fully opened position. Gate valves 18 inches and larger shall fully comply with the requirements of AWWA C500 and shall be double disc parallel seat with bypass and inside screw spur geared operator, unless otherwise specified or shown on the Drawings. Valves shall be American Darling Series 50, Mueller, or equal.

E. Valves shall be flanged mechanical joint as shown on the Drawings, with non-rising stems, and with a 2-inch square standard AWWA operating nuts unless otherwise shown on the Drawings or specified herein.

F. All internal ferrous components and surfaces of the valves, with the exception of stainless steel and finished or bearing surfaces, shall be shop painted with two coats (10 mils min. dry film thickness) of the manufacturer's premium epoxy for corrosion resistance. Damaged surfaces shall be repaired in accordance with the manufacturer's recommendations.

G. Exterior Valve Coatings: All exterior surfaces of iron body gate valves shall be clean, dry and free from rust and grease before coating. For buried service, the exterior ferrous parts of all valves shall be coated at the factory with an asphaltic coating in accordance with ANSI/AWWA C151 latest revisions. Prior to backfilling, all uncoated nuts, bolts, glands, rods and other parts of joints shall be coated in the field with coal tar epoxy equal to Koppers Bitumastic No. 300 M.

2.02 KNIFE GATES VALVES

A. Knife gate valves shall be cast iron conforming to ASTM A126, Class B with resilient ring seal seat. The gate shall be stainless steel with a beveled, knife-like edge. The knife gate valve shall be flanged in accordance with ANSI B-16.1, 125 pound flange with a handwheel operator as manufactured by DeZurik, or equal

B. [END OF SECTION]

SECTION 15109

PLUG VALVES

PART 1 GENERAL

(NOT USED)

PART 2 PRODUCTS

2.01 PLUG VALVES

A. Plug valves shall be of the non lubricated, eccentric seating plug type with synthetic rubber faced plugs as manufactured by DeZurik Company, Pratt, Milliken, or equal. All valves shall be provided with limit stops and rotate 90° from fully open to fully shut. The minimum working pressure for all valves shall be 150 psi, and the test pressure shall be at least 270 psi for valves up through 12-inch and at least 230 psi for valves 14-inch and larger. The port area of valves shall be at least 80 percent of full pipe area for valves less than 24 inches and 70 percent for valves 24 inches and larger, unless otherwise specified herein. The body materials shall be of epoxy coated cast iron or semi steel, unless specified otherwise. Seats shall have a welded overlay of 90 percent pure nickel and machined to a finish containing no stress cracks. Plug facings shall be of Hycar, or equal and completely suitable for use with domestic sewage.

B. The shaft seal shall be either the bronze cartridge type with at least two O Rings, monolithic V Type, U-Cup Type, or pull-down packing type. If monolithic V Type, U-Cup Type, or pull-down packings are utilized, it shall be self-adjusting, self-compensating type. Packing shall be as manufactured by Chevron, or equal. Plug valves with pull down packings shall be designed with an extension bonnet so that repacking can be done without removal of the actuator.

C. All buried valves shall have mechanical joint ends (unless otherwise shown), conforming to ANSI A21.11 (AWWA C 111), and shall be operated with a standard AWWA 2-inch square nut through a totally enclosed worm gear actuator. Valve boxes shall be installed with all buried plug valves and shall be as specified herein.

D. Unless otherwise shown, all exposed valves 4 inches in diameter and larger shall have flanged ends conforming to ANSI B16.1 125/150 pound standard with face to face dimensions of standard plug valves. Valves smaller than 4 inches in diameter shall have screwed ends, unless otherwise noted.

E. Valves 8 inches in diameter and larger shall be handwheel or floorstand operated where required or indicated on the Drawings through totally enclosed worm gear actuators, unless otherwise specified or shown on the Drawings. Valves 6 inches in diameter and smaller shall have lever operators, unless otherwise specified or noted on the Drawings. Manual operators for plug valves mounted above 6 feet from the operating floor shall be equipped with worm gear chainwheel actuators.

F. The manufacturer shall certify that the plug valves are capable of operating in continuous duty service under these pressures and flow conditions.

G. Each valve shall by hydrostatically tested and tested for bubble tightness after the operator has been mounted and adjusted. Copies of the hydrostatic and leakage test certification and certification of conformance shall be submitted to the Engineer prior to shipment.

H. All internal and external ferrous components and surfaces of the valves, with the exception of stainless steel and finished or bearing surfaces, shall be shop painted with two coats (10 mils min. dry film thickness) of the manufacturer's premium epoxy for corrosion resistance. Damaged surfaces shall be repaired in accordance with the manufacturer's recommendations.

[END OF SECTION]

SECTION 15114

MISCELLANEOUS VALVES

PART 1 GENERAL

1.01 THE REQUIREMENT

A. Reference Section 15000, Basic Mechanical Requirements.

B. Valves intended for chemical service shall be constructed of materials suitable for the intended service.

PART 2 PRODUCTS

2.01 GLOBE VALVES (SERVICE/COMPRESSED AIR)

A. Globe valves (service/compressed air) shall be bronze body and bonnet with brass stem and stainless steel regrindable disc plug. Valves shall be Jenkins Valve Fig. 546 P, Crane Co., or approved equal with minimum 300 psi non shock cold water pressure rating and screwed ends.

2.02 SOLENOID VALVES

A. Three-way two position solenoid valves shall be of the two-coil type. Both coils shall be normally closed, and each shall open independently when energized. The valve shall be of forged brass body and bonnet with a Buna "N" diaphragm and screwed ends. The solenoid's internal parts shall be of 300 and 400 series stainless steel. The valve shall have a safe body working pressure of 125 psi and shall be as manufactured by ASCO Valves, Automatic Switch Co., or equal, for 120V, 60 Hz, single phase operation. Solenoid enclosure shall be NEMA 4 watertight.

B. Two-way solenoid valves shall be normally closed and shall open when the solenoid is energized, unless otherwise noted. The valve shall be of forged brass body and bonnet with a BUNA "N" diaphragm and screwed ends. The solenoid's internal parts shall be of 300 and 400 series stainless steel. The valve shall have a safe body working pressure of 125 psi, and shall be as manufactured by ASCO Valves, Automatic Switch Co., or equal, for 120-volt, 60 Hz, single phase operation. Solenoid enclosure shall be NEMA 4 watertight.

C. Four-way two position solenoid valves shall be of the single coil type and shall be normally closed and shall open when the solenoid is energized (i.e. fail closed). The remainder of the four-way two position solenoid valves shall be of the two-coil type. Both coils shall be normally closed, and each shall open independently when energized. The valve shall be of forged brass body and bonnet with a Buna "N" diaphragm and screwed ends. The solenoid's internal parts shall be of 300 and 400 series stainless steel. The valve shall have a safe body working pressure of 125 psi and shall be as manufactured by ASCO Valves, Automatic Switch Co. or equal, for 120V, 60 Hz, single phase operation. Solenoid enclosure shall be NEMA 4 watertight. The solenoid valve shall be provided with a manual override.

2.03 PRESSURE RELIEF, REDUCING, AND REGULATING VALVES

A. Pressure relief valves 1 inch and under shall have bronze bodies and above 1 inch shall have cast iron bodies, bronze fitted with grey iron diaphragm base and straight chamber and phosphorus bronze diaphragm. The ratio of the diaphragm area to the seat area shall be

adequate to overcome sticking. The seat disc shall be of non-corrodible, non-sticking material capable of withstanding extreme temperatures. Valves shall permit dismantling for repairs and cleaning without being removed from the line. Valves shall conform to the ASME Boiler Construction Code as approved by both the Underwriters Lab., and the National Board of Boiler Pressure Vessel Inspectors. All valves shall be designed for a minimum working pressure at least equal to the working pressure of the corresponding pipeline and shall have adjustment over a range of at least 20 percent above or below the required setting pressure of the installation.

B. Pressure relief valves (non-potable water service) shall be diaphragm activated, single seat, pilot operated and shall maintain a constant upstream pressure by relieving excess pressure. The valve shall be normally closed and shall open to maintain the required back pressure when the valve inlet pressure reaches the pilot control set point. The initial pilot control setting shall be 78 psi. The stem shall be stainless steel and shall be guided through the center for 100% of the stem travel. The main valve throttling plug shall be provided with V port sections to insure precise control at low flow rates. All internal metal parts shall be bronze or stainless steel. The control pilot shall be direct acting, spring loaded, and adjustable with bronze body and stainless-steel trim. The diaphragm and seat disc shall be BUNA N. The valve shall be of the angle or globe pattern as shown on the Drawings and shall be fully repairable in the line. The pressure relief valve shall be the Model 428CP as manufactured by Bailey, Fresno, California, or equal.

C. Pressure reducing and regulating valves (water service) 1/2 inch and under shall be bronze and above 1/2 inch shall have cast iron bodies bronze fitted. Valves shall be constructed with full openings and capable of supplying a full flow of water at reduced pressure. Valves shall be so constructed that repairs can be made without removing the valves from the line. The valves shall be equipped with a sedimentation chamber and stainless steel or bronze strainer. Pressure reducing and regulating valves shall be the back pressure sustaining type and shall operate over a range at differential pressures from 5 to 120 psi. Reducing and regulating valves shall meet or exceed the requirements of ASSE 1003 (ANSI A112.26.2) and shall be Model 616R, as manufactured by Fisher Controls, WATTS Series 25 AUB, GA, or equal.

2.04 SEWAGE AIR and VACUUM/PRESSURE AIR RELEASE VALVES

A. Sewage air and vacuum/pressure air release valve assemblies shall be installed at all the locations specified herein or indicated on the Drawings and shall be installed complete with all appurtenant piping and valves as required for a complete and operable installation. The valves shall be constructed of cast iron with stainless steel float, and all working parts shall be bronze, brass, stainless steel, or other corrosion resistant material. The valves shall be designed for a minimum working pressure of 150 psi and a test pressure of 300 psi. The valves shall include isolation valve and backflushing attachments which shall consist of blow off valves, quick disconnect couplings, and a minimum of 5 feet of rubber hose suitable for backflushing without dismantling the valve. All air and vacuum valves shall be provided with "soft seating" material to provide drip tight closure at 1 to 65 psig. The exhaust from the valve shall be piped to a suitable disposal point. All valves 1-inch diameter and larger shall have a 1/4-inch min. diameter drain plug.

B. The pressure air release valves shall have a 2 inch (minimum) threaded connection. The pressure air release valves shall have a discharge capacity of scfm, minimum, at a differential pressure range from 3 psi to 65 psi, and an orifice of 1/4 inch diameter, minimum.

C. All internal and external ferrous components and surfaces of the valves, with the exception

of stainless steel and finished or bearing surfaces, shall be shop painted with two coats (10 mils min. dry film thickness) of the manufacturer's premium epoxy for corrosion resistance. Damaged surfaces shall be repaired in accordance with the manufacturer's recommendations.

D. The air and vacuum valves and pressure air release valves shall be similar to the following types and models as manufactured by the Crispin Valve Division of Multiplex Manufacturing Co. or approved equal.

Location	Size	Discg. Cap @ 2 psi	Intake Cap @ 5 psi	ARV/PRV Model #	Connection
WAS	2"	125 scfm	200 scfm	SL20AB/SL20	Threaded
Int. Lift Station	3"	N/A	1500 scfm	SVR-31-121	Threaded
RAS	3"	325 scfm	1500 scfm	S30AB/SL20B	Threaded

2.05 PRESSURE AIR RELEASE VALVE (POTABLE WATER ONLY)

A. The pressure air release valve shall be constructed of cast iron with stainless steel trim and stainless-steel float, and all working parts shall be bronze, brass, stainless steel, or other corrosion resistant material. The valves shall be designed for a minimum working pressure of 150 psi and a test pressure of 300 psi. All valves shall be provided with "soft seating" material to provide drip-tight closure at 1 to 65 psig. All valves shall be provided with a vacuum check.

B. All internal and external ferrous components and surfaces of the valves, with the exception of stainless steel and finished or bearing surfaces, shall be shop painted with two coats (10 mils min. dry film thickness) of the manufacturer's premium (NSF approved) epoxy for corrosion resistance. Damaged surfaces shall be repaired in accordance with the manufacturer's recommendations.

C. The pressure air release valve shall be the following types and models as manufactured by the Crispin Valve Division of Multiplex Manufacturing Co., or equal.

Location	Size	PRV Discharge Capacity @ 2 psi	Model #	Connection
All	2"	45 SCFM	PL20/V5	Screwed

2.06 HOSE VALVES

A. Hose valves shall be 300 lbs. non-shock cold water angle or globe valves, Fig. 112/113 as manufactured by Jenkins Valve Co., or equal. Valves shall be bronze bodied with Buna N or neoprene disc and bronze bonnet and packing nut. Valve stem, gland, and lock nut shall be brass. Valve shall be provided with 3-inch diameter malleable iron handwheel, cap and chain, and 3/4 inch or 1-inch (or 2 inch near flushing connections) hose connection outlet.

2.07 NEEDLE VALVES

A. Needle valves shall be bronze body and spindle with follower gland and shall be 400 psi, non-shock cold water needle valves, Figure 743 G as manufactured by Jenkins Bros., Corp., Crane Co. No. 88, or equal.

B. Needle valves (service air) shall be bronze body, with stainless steel stem. Valves shall be Jenkins Valve Fig. 741G, Crane Co. or equal and shall have minimum 400 psi non shock cold water pressure rating and screwed ends.

2.08 PINCH VALVES

A. Pinch valves shall be of the full metal body mechanical pinch type with flanged joint ends on both body and rubber sleeve. Port areas shall be 100% of the full pipe area through the entire valve length. Flanges shall be of one size larger than pipeline size to allow extra thickness of rubber. Mating pipeline flanges shall be standard reducing flange with I.D. to exactly match valve I.D. All internal valve metal parts are to be completely protected by the rubber pinch tube. The rubber pinch tube shall be one-piece construction with integral flanges drilled to ANSI 125# standard. The pinch tube shall also be Nylon reinforced with an exterior wrapping of 1/8" thick neoprene. Handwheel closing mechanism shall be double acting and pinch the sleeve equally from two sides. The stem shall be non-rising and have a non-rising handwheel. There shall be no cast part in the operating mechanism. Each valve shall have flanges conforming to ANSI B16.1, Class 125 lb. Valves shall be Series "75 DW" as manufactured by Red Valve Co., Inc. or equal.

2.09 MUD VALVES

A. Mud valves shall be cast iron body with bronze stem, stem nut, disc ring, and seat ring. Bolts and nuts shall be corrosion resistant. Mud valve shall be flanged with non-rising stem. Mud valve shall be Model F 3075 as manufactured by Clow, or equal.

2.10 TELESCOPING VALVES

A. Telescoping valves shall be of the size shown on the Drawings. The valves shall be rising stem lift with stainless steel tube body material. All connecting bails and hardware shall be stainless steel. Minimum wall thickness for the tube shall be 1/8". At the point where the sliding tube enters the vertical stationary pipe a seal shall be affected by means of a wiper gasket retained by a stainless-steel holding flange. The friction seal flange shall have a neoprene or Buna N wiper gasket. The valves shall have two V notched weirs located at 180 degrees to each other (maximum travel 36"). The valve lift mechanism shall be ball bearing supported with torque plate, mounted on offset type cast iron pedestal. Provide electric motor operator in weather tight enclosure to be mounted on valve floorstand. The operator shall be suitable for the intended operation and sized for the telescoping valve that it is used with. The electric operator shall raise and lower the telescoping valve at a rate of 1 FPM. Provide pushbutton station for operation in stainless steel NEMA 4 enclosure. The operator shall have a manual hand crank that does not turn during electric operation. The motor drive shall be a Limitorque valve controller, or equal. Telescoping valves shall be as manufactured by Waterman Industries, Inc., or equal.

2.11 TAPPING SLEEVES

A. Tapping sleeves shall conform to the requirements of AWWA C110/A21.10 latest revision.

2.12 SAMPLING COCKS AND HOSE BIBBS

A. Sampling cocks and hose bibbs shall be provided and installed where indicated on the drawings and shall be 3/4 inch bronze body, rubber composition disc, garden hose valves.

2.13 VALVE BOXES

A. Furnish, assemble, and place a valve box over the operating nut for each buried valve. The valve box shall be designed so as to prevent the transmission of surface loads directly to the valve or piping.

B. Valve boxes shall be of the adjustable slide type of suitable length with an interior diameter of not less than 5 inches. The valve boxes shall be manufactured of cast iron and shall be adjustable for elevation and shall be set to allow equal movement above and below finished grade. The castings shall be manufactured clean, even grain, gray cast iron conforming to ASTM A48 Class 30B for Gray Iron Castings; and shall be smooth, true to pattern, free from blow holes, sand holes, projections and other harmful defects. The seating surfaces of both the cover and the top section shall be machined so that the cover will not rock after it has been seated. The valve boxes shall be coated inside and outside with an asphaltic coating prior to machining, so that the machined seating surfaces will be free of any coating. Cast iron valve box assemblies shall be Clow Corp. No. F 2452, Tyler Corp. Series 6855 or 6865 approved equal.

C. Valve extension stems shall be provided for all buried valves when operating nut is deeper than 3 feet below final grade.

2.14 VALVE VAULTS

A. Valve vaults shall be constructed of precast or cast in place concrete with dimensions as shown on the Drawings. Concrete shall have a minimum compressive strength of 4,500 psi at 28 days. The steel reinforcement for the structures shall be designed and constructed to withstand the loads expected. The cover for the valve vault shall be as shown on the Drawings as approved by the Engineer.

2.15 SERVICE SADDLES

A. Service Saddles: Service saddles shall have ductile iron bodies in accordance with ASTM A536, latest revision, with double stainless steel straps. Ductile iron body shall have a fusion bonded nylon coating with a minimum thickness of 12 mils. Straps shall be Type 304 stainless steel with premium grade Type 304 stainless steel bolts and Type 304 stainless steel washers and nuts. The nuts shall be Teflon coated. The gasket material shall be an elastomeric compound resistant to degradation by oil, natural gas, acids, alkalies, most aliphalic fluids and chloramines in potable water. The outlet to the saddle shall have CC threads. Service saddles shall be Rockwell No. 317 or an equal approved by the Engineer.

2.16 CORPORATION STOPS

A. Corporation stops shall be manufactured from cast bronze with machined fitting surfaces, and in accordance with AWWA C 800 latest, in sizes 1 inch up to including 2 inches. The inlet connection shall be AWWA standard corporation stop thread. The outlet connection shall be a packjoint outlet for copper or plastic tubing. Corporation stops with compression joint outlets for copper or plastic tubing shall be Type FB 1102 as manufactured by Ford Meter Box Company, or approved equal.

2.17 CURB STOPS

A. Curb stops shall be AWWA C 800 approved ball valve, roundway, with check, with lock wing cast on stop body and operating tee cap to provide for locking the stop in closed position. Curb stops for use with copper or plastic services shall have an inlet connection with a compression joint and an outlet connection with female iron pipe thread, as manufactured by Ford Meter Box Company B41 with padlock wings, or approved equal.

2.18 TIE RODS

A. When prior approval is obtained from the Engineer, ductile iron pipe, fittings, and valves may be restrained using tie bolt joint restraint. All bolts, nuts, washers, tie rods and other fasteners for the joint restraint system shall be manufactured of Type 316 Stainless Steel. Tie rods shall have a minimum diameter of 3/4 inch. The number of tie rods required per joint shall be as recommended by the manufacturer.

[END OF SECTION]

SECTION 15140

PIPE SUPPORTS

PART 1 – GENERAL

1.01 THE REQUIREMENT

A. Furnish all equipment, labor, materials, and design calculations required to provide pipe supports in accordance with the Contract Documents.

1.02 RELATED WORK SPECIFIED ELSEWHERE

A. Section 15000, Basic Mechanical Requirements.

1.03 SUBMITTALS

A. Pipe support submittals will not be reviewed prior to review and acceptance of pipe layout submittal. Pipe support submittal shall be fully coordinated with approved pipe layout submittal. Contractor shall use approved piping layout submittal drawings to show proposed pipe support type and location with accurate dimensions to demonstrate that supports meet all specified requirements.

B. Applicable and associated cut sheets and drawings for materials and support components shall be submitted with the Shop Drawings in accordance with or in addition to the submittal requirements of the Contract Documents and Section 15000, Basic Mechanical Requirements.

1. Catalog cut information on all system components such as pipe supports, hangers, guides, anchors, and channel-type support.

2. Drawings of the piping support systems, locating each support, brace, hanger, guide, component, and anchor. Identify support, hanger, guide and anchor type by catalog number and Shop Drawing detail number.

3. With each piping support system Shop Drawing, the Contractor shall attach calculations prepared and sealed by a Professional Engineer, licensed in the State of Florida, showing that the piping support system complies with the specified requirements, including all building code requirements pertaining to support of piping and other non-structural components.

4. Table showing the manufacturer’s recommended hanger support spacing for PVC pipe.

PART 2 – PRODUCTS

2.01 GENERAL

A. Pipe supports shall be manufactured products, where possible.

B. The Contractor shall be responsible for the design of all piping support systems unless noted otherwise herein or specifically detailed on the Contract Drawings. The absence of pipe supports and details on the Drawings shall not relieve the Contractor of the responsibility of providing a delegated pipe support design that is signed and stamped by a registered Professional Engineer, licensed in the State of Florida. Standard details for pipe supports have been included on the Drawings to define minimum requirements as to the types of Contractor-designed pipe supports that will be acceptable.

C. Where a specific location or type of support is shown on the Drawings, the location and type shall be incorporated in the Contractor's pipe support design.

D. Where special pipe support fabrications are required, products and execution shall be as specified in other related and referenced Sections of the Specifications.

E. Existing piping support systems to support new piping shall only be used if the Contractor submits supporting calculations demonstrating that the existing supports are adequate for the load imparted by the new piping.

F. Contractor's pipe support design shall include, but not be limited to, the following criteria and loads imposed on the piping system:

1. Thrust loads based on the design pressures specified. Pipe support design shall not utilize process equipment for thrust restraint or support of piping loads.

2. Dead loads and live loads per the latest version of ASCE 7-10 and Florida Building Code if more stringent. Loads shall include, but not be limited to, the following:

    a. Weight of pipe.

    b. Weight of pipe contents.

    c. Weight of insulation, where present.

    d. Wind loads.

3. Loads associated with thermal expansion and contraction of the piping system over the full range of potential temperatures the piping system could experience that should include, but not be limited to, the following:

    a. Ambient temperature range per local historical weather data (historic high and low obtained from NOAA).

b. Process operating temperature range.

c. Exposure to sunlight where applicable.

4. Additional pipe support design considerations shall include the following:

a. A minimum safety factor of 2 or as approved by the Engineer, based upon the yield strength of the support material, shall be used for pipe supports, braces, hangers, and guides as well as for beam and column members used in channel-type support systems.

b. The horizontal pipe hanger and/or floor support spacing shall be as recommended by the pipe and/or hanger manufacturer but shall not exceed 10 feet on center unless indicated otherwise herein or on the Drawings.

c. The design, sizing, and spacing of anchors, including concrete anchors, shall be based on withstanding shear and pullout loads imposed by loading at each support. The minimum anchor size shall be ½ inches in diameter.

2.02 HANGERS AND SUPPORTS

A. All piping shall be adequately supported and braced by means of steel hangers and/or supports, concrete piers, supplemental lateral bracing components, pre-fabricated brackets, or otherwise as may be required by the location and forces applied per governing code, including gravity and lateral forces from seismic and/or wind.

B. Generally, concrete supports shall be used where pipe centerline is less than 3 feet above floor, and hangers above 6 feet unless specified or shown otherwise.

C. Supports shall be not more than 10 feet on center for steel and cast iron, 5 feet on center for plastic unless otherwise shown on the Drawings or required by the specific manufacturer.

D. All necessary inserts or appurtenances shall be furnished and installed in the concrete or structures for adequately securing hangers and supports to the structure.

1. Metal pipe support materials, where stainless steel pipe is supported, shall be Type 316L stainless steel.

2. Metal pipe support materials, where carbon steel, ductile or other ferrous pipe is supported, shall be galvanized carbon steel unless indicated otherwise on the Drawings or in the Specifications or by the Engineer.

3. Metal pipe supports indicated as standard type pipe hangers are designed and detailed for gravity loading only. Resulting lateral loads from wind, seismic, or other lateral loads per code, or special loading conditions during construction, shall be applied to the pipe in accordance with the governing building code. Supplemental lateral stiffening members (when necessary) shall be provided along

pipe or at gravity supports using appropriate supplemental members and connections when required by calculations. The Contractor shall include design calculations and details with all pipe hanger and support submissions for review by the Engineer. The main structure and structural components that will support the pipe hangers and other appurtenant components of the facility have been designed to resist all resulting secondary lateral loading from pipe hangers and other non-structural members for gravity and resulting lateral loads.

E. Hangers and supports shall conform to the following requirements:

1. All hangers and supports shall be type 316L stainless steel, hot dip galvanized, or properly coated steel piping as specified herein.

2. All fabricated metal hangers and supports shall be capable of adjustment after installation. Different types of hangers and supports along a pipe length, including bends, shall be kept to a minimum.

3. Hanger rods shall be straight and vertical. Chain, wire, strap, or perforated bar hangers shall not be used. Hangers shall not be suspended from other piping.

4. Vertical piping shall be properly supported at each floor and between floors by stays or braces to prevent rattling and vibration.

5. Supports and hangers for plastic and FRP piping shall include wide saddles or bands as recommended by the manufacturer and approved by the Engineer to distribute load and thus avoid localized deformation of the pipe.

6. Hangers and supports shall prevent contact between dissimilar metals by use of copper plated, rubber, vinyl coated, or stainless-steel hangers.

7. Ferrous pipes to be painted shall be painted in accordance with Section 09900, Painting. Ferrous pipes that require painting or galvanizing shall be supported by galvanized hangers and supports. Stainless steel piping shall be supported by stainless steel saddles and straps (if required).

8. Copper piping shall be supported by plastic coated or copper plated steel hangers and supports.

9. Plastic piping shall be supported by plastic coated steel hangers and supports.

10. Hangers and supports shall provide for thermal expansion throughout the full operating temperature range.

11. Expansion and adhesive type anchors used for pipe hangers and supports shall be Type 316 stainless steel.

F. Metallic hangers and supports may be standard make by Anvil International, Inc., "Witch" by Carpenter & Paterson, Ltd., B-Line Systems, Inc., or equal; and data on the

types and sizes to be used shall be furnished to the Engineer for approval. Metallic support system brackets, rods, support clips, clevis hangers, hardware, etc. shall be cast iron or welded steel construction. All gravity type hangers and supports shall be restrained laterally to resist loading as required by the governing code.

G. Non-metallic support system shall be a heavy-duty channel framing system. Channel frames shall be manufactured by the pultrusion process using corrosion grade polyester or vinyl ester resins. All fiberglass construction shall include suitable ultraviolet inhibitors for UV exposure and shall have a flame spread rating of 25 or less per ASTM E84. Piping accessories, pipe clamps, clevis hangers, support posts, support racks, fasteners, etc., shall be constructed of vinyl ester or polyurethane resin. Non-metallic support systems shall be standard make Aickinstrut by Aickinstrut, Inc., Unistrut Fiberglass by Unistrut, Inc., Enduro Fiberglass Systems, or equal. The Contractor shall submit data on the types and sizes of approval. Unless otherwise shown or specified the Contractor shall provide support spacings in conformance with the pipe and support system manufacturer's requirements.

PART 3 – EXECUTION

3.01 GENERAL INSTALLATION REQUIREMENTS

A. Support piping connections to equipment by pipe support and not by the equipment.

B. Support large or heavy valves, fittings, flow meters, and appurtenances independently of the connected piping.

C. Support no pipe from the pipe above it.

D. Support piping at changes in direction or in elevation, adjacent to flexible joints, expansion joints, and couplings, and where shown.

E. The Contractor shall not install piping supports and hangers in equipment access areas or bridge crane runs.

F. Brace hanging pipes against horizontal movement by both longitudinal and lateral sway bracing.

G. Install pipe anchors (fixed supports and/or guides) where shown and/or as may otherwise be required to withstand expansion thrust loads and to direct and control thermal expansion. The Contractor may install additional pipe anchors and flexible couplings to facilitate piping installation, provided that complete details describing location, pipe supports, and hydraulic thrust protection are submitted.

[END OF SECTION]

SECTION 16000

BASIC ELECTRICAL REQUIREMENTS

PART 1 - GENERAL

1.01 THE REQUIREMENT

A. The Contractor shall furnish all labor, materials, tools, and equipment, and perform all work and services necessary for, or incidental, to the furnishing and installation of all electrical work as shown on the Drawings, and as specified in accordance with the provisions of the Contract Documents and completely coordinate with the work of other trades involved in the general construction. Although such work is not specifically shown or specified, all supplementary or miscellaneous items, appurtenances, and devices incidental to or necessary for a sound, secure, and complete installation shall be furnished and installed as part of this work. The Contractor shall obtain approved Shop Drawings showing wiring diagrams, connection diagrams, roughing-in and hook up details for all equipment and comply therewith. All electrical work shall be complete and left in operating condition in accordance with the intent of the Drawings and the Specifications for the electrical work.

B. Where the word "Contractor" appears in these Division 16 Technical Specifications it shall be construed to mean the electrical subcontractor.

C. Reference Section 17000 - Instrumentation and Control – General for scope of work details as they relate to the Division 17 subcontractor.

D. Maintaining the operation of these facilities during the duration of the construction period is essential and required. The Contractor shall furnish and install temporary equipment as required to maintain facility operation. Reference individual Specifications for construction sequencing and specific operational constraint information.

E. All electrical equipment shall conform to the applicable NEMA specifications. All electrical equipment shall be properly identified in accordance with these Specifications and Contract Drawings. All panelboards, starters, control panels, cabinet enclosures, junction boxes, pull boxes, and equipment switches shall be identified per the requirements of Section 16195 – Electrical Identification

F. All materials, equipment, sizes and capacities of electrical equipment incorporated in the project shall conform to the latest requirements of the current National Electric Code, the National Electrical Manufacturer's Association, the State and local electrical codes, and to applicable rules and regulations of the local electrical utility serving the project.

G. All material and equipment must be the product of an established and reputable manufacturer; must be new and of first class construction; must be designed and guaranteed to perform the service required; and must bear the label of approval of the Underwriters Laboratories, Inc., where such approval is available for the product of the listed manufacturer as approved by the Engineer.

H. When a specified or indicated item has been superseded or is no longer available, the manufacturer's latest equivalent type or model of material or equipment as approved by the Engineer shall be furnished and installed at no additional cost to the Owner.

I. Where the Contractor's selection of equipment of specified manufacturers or additionally approved manufacturers requires changes or additions to the system design, the Contractor shall be responsible in all respects for the modifications to all system designs, subject to approval of the Engineer. The Contractor's bid shall include all costs for all work of the Contract for all trades made necessary by such changes, additions or modifications or resulting from any approved substitution.

J. Furnish and install controls for each piece of equipment requiring the controls under this Contract. The controls shall be the size and type recommended by the manufacturer for the application and as otherwise specified or indicted on the Drawings. Refer to Divisions 01 and 17 of the Specifications for control, connection and coordination descriptions and requirements.

K. Furnish and install all stands, racks, brackets, supports, and similar equipment required to properly serve the equipment which is furnished under this Contract, or equipment otherwise specified or indicated on the Drawings.

1.02 DRAWINGS

A. The Contractor shall furnish, install, and place in satisfactory condition ready for operation, all conduits, cables, and all other material needed for the complete lighting, power, control and other electrical systems shown or indicated in the Contract Drawings. Additional conduits and the required wiring shall be installed by the Contractor wherever needed to complete the installation of the specific equipment furnished.

1.03 EQUIPMENT LOCATION

A. The Drawings show the general location of feeders, transformers, outlets, conduits, and circuit arrangements. Because of the small scale of the Drawings, it is not possible to indicate all of the details involved. The Contractor shall carefully investigate the structural and finish conditions affecting all of his work and shall arrange such work accordingly; furnishing such fittings, junction boxes, and accessories as may be required to meet such conditions. The Contractor shall refer to the entire Drawing set to verify openings, special surfaces, and location of other equipment, or other special equipment prior to roughing-in for panels, switches, and other outlets. The Contractor shall verify all equipment dimensions to insure that proposed equipment will fit properly in spaces indicated.

B. Where outlets are shown near identified equipment furnished by this or other Contractors, it is the intent of the Specifications and Drawings that the outlet be located at the equipment to be served. The Contractor shall coordinate the location of these outlets to be near the final location of the equipment served whether placed correctly or incorrectly on the Drawings.

1.04 LOCAL CONDITIONS

A. The Contractor shall examine the site and become familiar with conditions affecting the work. The Contractor shall investigate, determine, and verify locations of any overhead

or buried utilities on or near the site, and shall determine such locations in conjunction with all public and/or private utility companies and with all authorities having jurisdiction. All costs, both temporary and permanent to connect all utilities, shall be included in the Bid. The Contractor shall be responsible for scheduling and coordinating with the local utility for temporary and permanent services.

B. In addition, the Contractor shall relocate all duct banks, lighting fixtures, receptacles, switches, boxes, and other electrical equipment as necessary to facilitate the Work included in this project. Costs for such work shall be included in the Bid.

C. The Contractor shall be responsible for coordinating all construction related issues and electric utility equipment with the electrical utility and the Owner.

1.05 SUBMITTALS

A. In accordance with the procedures and requirements set forth in the General Conditions, Section 01300 - Submittals and the requirements of the individual specification sections, the Contractor shall obtain from the equipment manufacturer and submit the following:

1. Shop Drawings.

2. Operation and Maintenance Manuals.

3. Spare Parts List.

4. Special Tools List.

5. Proposed Testing Methods and Reports of Certified Shop Tests.

6. Reports of Certified Field Tests.

7. Manufacturer’s Representative’s Certification.

B. Submittals shall be sufficiently complete in detail to enable the Engineer to determine compliance with Contract requirements.

C. Submittals will be approved only to the extent of the information shown. Approval of an item of equipment shall not be construed to mean approval for components of that item for which the Contractor has provided no information.

D. Some individual Division 16 specification sections may require a Compliance, Deviations, and Exceptions (CD&E) letter to be submitted. If the CD&E letter is required and shop drawings are submitted without the letter, the submittal will be rejected. The letter shall include all comments, deviations and exceptions taken to the Drawings and Specifications by the Contractor and Equipment Manufacturer/Supplier. This letter shall include a copy of this specification section. In the left margin beside each and every paragraph/item, a letter "C", "D", or "E" shall be typed or written in. The letter "C" shall be for full compliance with the requirement. The letter "D" shall be for a deviation from the requirement. The letter "E" shall be for taking exception to a requirement. Any requirements with the letter "D" or "E" beside them shall be provided with a full typewritten explanation of the deviation/exception. Handwritten explanation of the deviations/exceptions is not

acceptable. The CD&E letter shall also address deviations, and exceptions taken to each Drawing related to this Specification Section.

1.06 APPLICABLE CODES AND REQUIREMENTS

A. Conformance

1. All work, equipment and materials furnished shall conform with the existing rules, requirements and specifications of the following:

   a. Insurance Rating Organization having jurisdiction

   b. The serving electrical utility company

   c. The currently adopted edition of the National Electrical Code (NEC)

   d. The National Electric Manufacturers Association (NEMA)

   e. The Institute of Electrical and Electronic Engineers (IEEE)

   f. The Insulated Cable Engineers Association (ICEA)

   g. The American Society of Testing Materials (ASTM)

   h. The American National Standards Institute (ANSI)

   i. The requirements of the Occupational Safety Hazards Act (OSHA)

   j. The National Electrical Contractors Association (NECA) Standard of Installation

   k. National Fire Protection Association (NFPA)

   l. International Electrical Testing Association (NETA)

   m. Florida Building Code 2020 (7th Edition)

   n. All other applicable Federal, State and local laws and/or ordinances.

2. All material and equipment shall bear the inspection labels of Underwriters Laboratories, Inc., if the material and equipment is of the class inspected by said laboratories.

3. All work shall be in accordance with local codes.

B. Nonconformance

1. Any paragraph of requirements in these Specifications, or Drawings, deviating from the rules, requirements and Specifications of the above organizations shall be invalid and their (the above organizations) requirements shall hold precedent thereto. The Contractor shall be held responsible for adherence to all rules, requirements and specifications as set forth above. Any additional work or material necessary for adherence will not be allowed as an extra, but shall be included in the Bid. Ignorance of any rule, requirement, or Specification shall not be allowed as an excuse for nonconformity. Acceptance by the Engineer does not relieve the Contractor from

the expense involved for the correction of any errors which may exist in the drawings submitted or in the satisfactory operation of any equipment.

C. Certification

1. Upon completion of the work, the Contractor shall obtain certificate(s) of inspection and approval from the National Board of Fire Underwriters or similar inspection organization having jurisdiction and shall deliver same to the Engineer and Owner.

1.07 PERMITS AND INSPECTIONS

A. The Contractor shall refer to the individual specifications.

1.08 TEMPORARY LIGHTING AND POWER

A. The Contractor shall refer to the individual specifications.

1.09 TESTS

A. Upon completion of the installation, the Contractor shall perform tests for operation, load (Phase) balance overloads, and short circuits. Tests shall be made with and to the satisfaction of Owner and Engineer.

B. The Contractor shall perform all field tests and shall provide all labor, equipment, and incidentals required for testing and shall pay for electric power required for the tests. All defective material and workmanship disclosed shall be corrected by the Contractor at no cost to Owner. The Contractor shall show by demonstration in service that all circuits and devices are in good operating condition. Test shall be such that each item of control equipment will function not less than five (5) times.

C. The grounding system shall be tested to assure continuity and compliance with the requirement that ground resistances do not exceed five (5) ohms when measured by a megohmeter or equivalent device. Due to soil conditions and/or other unforeseen field conditions, ground resistances greater than five (5) ohms may be acceptable if approved by the Engineer. Ground resistance measurements of each grounding electrode shall be taken and certified by the Contractor. Upon completion of the Project, the Contractor shall submit to the Engineer the measured ground resistance of each ground rod and grounding system, indicating the location of the rod and grounding system as well as the resistance and soil conditions at the time the measurements were made. Ground resistance measurements shall be made in normally dry weather not less than 48 hours after rainfall and with the ground under test isolated from other grounds. Ground resistance shall also be measured from each piece of equipment to the grounding electrode. Reference Section 16170 - Grounding and Bonding, for additional requirements.

D. Each lighting and power distribution panelboard shall be tested with main circuit breaker disconnected from the feeder, branches connected, branch circuit breakers closed, all fixtures in place and permanently connected, lamps removed or omitted from the fixtures, and all wall switches closed.

E. Insulation resistance testing of all incoming and outgoing cables for switchgear, motor control centers, lighting and power distribution panelboards, and similar equipment shall

be done after the cables are in place and just prior to final terminations. All data shall be recorded, as per Exhibit "A", attached to the end of Part 1 of this Section.

F. Feeder circuits shall be tested with the feeder conductors disconnected from the supplied equipment. Each individual power circuit shall be tested at the panel or motor control center with the power equipment connected for proper operation.

G. Megohmmeter tests of the insulation resistance of rotating machines and power feeders shall be conducted. The results will be accepted when the megger shows the insulation resistance to be not less than one megohm per 100 volts at 10°C using a 1,000-volt megger.

H. All transformers shall be Megohmmeter tested in accordance with the manufacturer's recommendations.

I. The Contractor shall furnish all equipment and personnel as required for testing.

J. Refer to each individual specification section for detailed test requirements.

K. The Contractor shall complete the installation and field testing of the electrical installation at least two (2) weeks prior to the start-up and testing of all other equipment. During the period between the completion of electrical installation and the start-up and testing of all other equipment, the Contractor shall make all components of the Work available as it is completed for their use in performing Preliminary and Final Field Tests.

L. Before each test commences, the Contractor shall submit a detailed test procedure, and also provide test engineer resume, manpower and scheduling information for the approval by the Engineer. In addition, the Contractor shall furnish detailed test procedures for any of his equipment required as part of the field tests of other systems.

M. Just prior to the final acceptance of a piece of equipment, the Contractor shall perform an infrared inspection to locate and correct all heating problems associated with electrical equipment. The infrared inspection shall apply to all new equipment and existing equipment that is in any way modified under this Contract. All heating problems detected with new equipment furnished and installed under the Scope of this Contract shall be corrected by the Contractor. All problems detected with portions of existing equipment modified under this Contract shall also be corrected by the Contractor. Any issues detected with portions of existing equipment that were not modified under this Contract are not the responsibility of the Contractor. Despite the Contractor not being held responsible for these problems, the Contractor shall report them to Owner and Engineer immediately for resolution. The infrared inspection report shall include both digital and IR pictures positioned side by side. Both the digital and IR pictures shall be clear and high quality. Fuzzy, grainy, or poorly illuminated pictures are not acceptable. The IR picture shall be provided with a temperature scale beside it, and an indication of the hot spot temperature in each picture. Reports shall be furnished in a 3-ring binder, with all pages printed in full color, with equipment assemblies separated by tabs.

1.10 DOCUMENTATION

A. The work requirements of this Section are in addition to and do not supersede testing and adjusting specified in other portions of the Contract Documents. The Contractor shall submit to the Engineer test records and reports for all testing.

1.11 FIELD TEST OF EQUIPMENT

A. The equipment to be tested shall include, but not be limited to, the following:

1. Dry Type Distribution Transformers
2. Panelboards
3. Individual Motor Controllers
4. Lighting Systems
5. Variable Frequency Drives and Related Motor Control Equipment
6. Conduit System
7. Cable and Wire
8. Grounding System
9. Fire Alarm System

B. Refer to each specific specification section for detailed field tests.

1.12 FINAL FIELD TEST OF SYSTEM

A. The Contractor shall complete the installation and testing of the electrical installation at least two (2) months prior to the start-up and testing of all other equipment. During the period between the completion of electrical installation and the start-up and testing of all other equipment, the Contractor shall make all components of the Work available as it is completed for their use in performing Preliminary and Final Field Tests.

B. Before each test commences, the Contractor shall submit a detailed test procedure, and also provide test engineer resume, manpower and scheduling information for the approval by the Engineer. In addition, the Contractor shall furnish detailed test procedures for any of his equipment required as part of the field tests of other systems.

C. The Contractor shall perform an infrared inspection to locate and correct all heating problems associated with electrical equipment. The infrared inspection shall apply to all new equipment and existing equipment that is in any way modified under this Contract.

1.13 PROTECTIVE DEVICE SETTING AND TESTING

A. The Contractor shall provide the services of a qualified, independent, third party testing company using N.E.T.A. certified technicians to adjust, set, calibrate and test all protective devices in the electrical system. The company shall not be a subsidiary of the electrical equipment manufacturer. The qualifications of the testing company and resumes of the technicians as well as all data forms to be used for the field testing shall be submitted.

B. All protective devices in the electrical equipment shall be set, adjusted, calibrated and tested in accordance with the manufacturers' recommendations, the coordination study, and best industry practice.

C. Proper operation of all equipment associated with the device under test and its compartment shall be verified, as well as complete resistance, continuity and polarity tests of power, protective and metering circuits. Any minor adjustments, repairs and/or lubrication necessary to achieve proper operation shall be considered part of this Contract.

D. All solid state trip devices shall be checked and tested for setting and operation using manufacturers recommended test devices and procedures.

E. Circuit breakers and/or contactors associated with the above devices shall be tested for trip and close functions with their protective device.

F. When completed, the Contractor shall provide a comprehensive report for all equipment tested indicating condition, readings, faults and/or deficiencies in same. Inoperative or defective equipment shall be brought immediately to the attention of the Engineer.

G. Prior to placing any equipment in service, correct operation of all protective devices associated with this equipment shall be demonstrated by field testing under simulated load conditions.

1.14 POWER SYSTEM STUDIES

A. General

1. The Contractor shall provide Power System studies, performed by a professional Engineer registered with the state of Florida, to the firm providing the protective device setting and testing services.

2. The studies shall include protective devices from all affected areas of the power distribution system.

B. Data Collection for the Studies

1. The Contractor shall provide the required data for preparation of the studies.

2. The Contractor shall expedite collection of the data to assure completion of the studies as required for final approval of the distribution equipment shop drawings and/or prior to release of the equipment for manufacture.

C. Short Circuit Study and Protective Device Evaluation Study

1. A protective device evaluation study shall be performed to determine the adequacy of circuit breakers, molded case switches, automatic transfer switches, and fuses by tabulating and comparing the short circuit ratings of these devices with the calculated fault currents. Appropriate multiplying factors based on system X/R ratios and protective device rating standards shall be applied. Any problem areas or inadequacies in the equipment due to short circuit currents shall be promptly brought to the attention of the Engineer.

2. All equipment furnished shall meet the requirements of this study.

D. Protective Device Coordination Study

1. A protective device coordination study shall be performed to provide the necessary calculations and logic decisions required to select or to check the selection of power fuse ratings, protective relay characteristics and settings, ratios and characteristics of associated current transformers, and low voltage circuit breaker trip characteristics and settings.

2. The coordination study shall include circuit breakers of motor control center. The phase and ground overcurrent protection shall be included as well as settings of all other adjustable protective devices.

3. The time-current characteristics of the specified protective devices shall be drawn on log-log paper. The plots shall include complete titles, representative one-line diagram and legends, significant motor starting characteristics, complete parameters of transformers, complete operating bands of low voltage circuit breaker trip curves and fuses. The coordination plots shall indicate the types of protective devices selected, proposed relay taps, time dial and instantaneous trip settings, transformer magnetizing inrush and ANSI transformer withstand parameters, cable thermal overcurrent withstand limits and significant symmetrical and asymmetrical fault currents. All restrictions of the National Electrical Code shall be adhered to and proper coordination intervals and separation of characteristic curves shall be maintained. The coordination plots for phase and ground protective devices shall be provided on a system basis. A sufficient number of separate curves shall be used to clearly indicate the coordination achieved.

4. The selection and settings of the protective devices shall be provided separately in a tabulated form listing circuit identification, IEEE device number, current transformer ratios and connections, manufacturer and type, range of adjustment and recommended settings. A tabulation of the recommended power fuse selection shall be provided for the medium voltage fuses where applied in the system. Any discrepancies, problem areas, or inadequacies shall be promptly brought to the attention of the Engineer.

E. Arc Flash Hazard Analysis

1. An Arc Flash Hazard Analysis shall be performed with the aid of a digital computer program in accordance with IEEE Std. 1584, “IEEE Guide For Performing Arc Flash Hazard Calculations”, NFPA 70E, and OSHA 29-CFR, Part 1910 Subpart S.

2. Arc Flash Warning Labels and Bus Detail Sheets shall be produced for each bus. Labels shall be printed in color on adhesive backed labels. Labels shall be attached to the doors of the equipment. Each label and detail sheet shall list the following:

a. Bus name

b. System operating voltage

c. Date of issue

d. Flash hazard protection boundary

e. Limited approach boundary

f. Restricted boundary

g. Prohibited boundary

h. Incident energy level

i. Required personal protective equipment class

In addition, each Bus Detail Sheet shall list the following:

- Upstream Protective Devices Names, Type and Settings

3. Arc Flash Evaluation Summary Sheets shall be produced. Summary sheets shall list the following:

a. Bus name

b. Upstream protective device name, type and settings

c. Bus line-to-line voltage

d. Bus bolted fault

e. Protective device bolted fault current

f. Arcing fault current

g. Protective device trip / delay time

h. Breaker opening time

i. Solidly grounded column

j. Equipment type

k. Gap

l. Arc flash boundary

m. Working distance

n. Incident energy

o. Required personal protective equipment class

4. Analyze the short circuit, protective device coordination, and arc flash calculations and highlight any equipment that is determined to be underrated or causes an abnormally high incident energy calculation. Propose approaches to reduce the

energy levels. Proposed major corrective modifications will be taken under advisement by the Engineer and the Contractor will be given further instructions.

F. Study Report

1. The results of the power system studies shall be summarized in a report. The report shall be submitted to the Engineer. The report shall be submitted for review and acceptance prior to submittals motor control centers, variable frequency drives, panelboards, and similar electrical equipment.

2. The report shall include the following sections:

   a. Description, purpose, basis and scope of the study and a detailed single line diagram with "nodes" cross-referenced to the calculated values tabulated in the study report of that portion of the power system which is included within the scope of the study.

   b. Tabulations of circuit breaker, fuse and other protective device ratings versus calculated short circuit duties and commentary regarding same.

   c. Protective device time versus current coordination curves, tabulations of relay and circuit breaker trip settings, fuse selection, and commentary regarding same.

   d. Fault current calculations including a definition of terms and guide for interpretation of computer printout.

3. Prior to commencing the work, the preparer the studies shall meet with the testing firm that will do the relay field testing and Owner's representative at the site for a walk through of the facility to ensure that existing conditions are taken into account.

4. The study shall include a detailed explanation of all software programs and procedures used to arrive at the calculated values, settings, and drawings (e.g. single line diagrams) showing fault valves at all busses.

1.15 SCHEDULES AND FACILITY OPERATIONS

A. Since the testing required in Article 1.12 above shall require that certain pieces of equipment be taken out of service, all testing procedures and schedules must be submitted to the Engineer for review and approval one (1) month prior to any work beginning. When testing has been scheduled, the Engineer must be notified 48 hours prior to any work to allow time for load switching and/or alternation of equipment. In addition, all testing that requires temporary shutdown of equipment must be coordinated with Owner so as not to affect proper operations.

B. At the end of the workday, all equipment shall be back in place and ready for immediate use should an emergency arise. In addition, should an emergency condition occur during testing, at the request of Owner, the equipment shall be placed back in service immediately and turned over to Owner personnel.

C. In the event of accidental shutdown of equipment, the Contractor shall notify Owner personnel immediately to allow for an orderly restart of affected equipment.

1.16 MATERIALS HANDLING

A. Materials arriving on the job site shall be stored in such a manner as to keep material free of rust and dirt and so as to keep material properly aligned and true to shape. Rusty, dirty, or misaligned material shall be rejected. Electrical conduit shall be stored to provide protection from the weather and accidental damage. Rigid non-metallic conduit shall be stored on even supports and in locations not subject to direct sun rays or excessive heat. Cables shall be sealed, stored, and handled carefully to avoid damage to the outer covering or insulation and damage from moisture and weather. Adequate protection shall be required at all times for electrical equipment and accessories until installed and accepted. Materials damaged during shipment, storage, installation, or testing shall be replaced or repaired in a manner meeting with the approval of the Engineer. The Contractor shall store equipment and materials in accordance with Section 01660 - Product Storage and Protection Requirements.

(Continued on Next Page)

(EXHIBIT A) TEST DATA - MEGOHMS TEST NO. ____							
Date:			Company:				
Time:			Location:				
Circuit:	Circuit Length:	Aerial:	Duct:	Buried:	No. of Conduc-tors	Size:	AMG MCM Shld:
Insulation Material:			Insulation Thickness:		Voltage Rating:		Age:
Type: _____Pothead _____Terminal					Location: Indoors_____ Outdoors_____		
Number and Type of Joints:							
Recent Operating History:							
Manufacturer:							
State if Potheads or Terminals were grounded during test:							
List associated equipment included in test:							
Miscellaneous Information:							

(EXHIBIT A)
TEST DATA - MEGOHMS
TEST NO. ____

Part Tested: Test Made:_____
Hours/Days:_____
After Shutdown:_____

Grounding Time: Dry Bulb Temperature:_____
Wet Bulb Temperature:_____

Test Voltage:	Equipment Temperature: _____ How Obtained: _____ Relative Humidity: _____ Absolute Humidity: _____ Dew Point: _____

Megohmmeter: Serial Number: _____ Range: _____
Voltage: _____ Calibration Date_____

Test Connections	To Line To Earth To Ground	To Line To Earth To Ground	To Line To Earth To Ground	Test Connections	To Line To Earth To Ground	To Line To Earth To Ground	To Line To Earth To Ground
□ Minute				5 Minutes			
□ Minute				6 Minutes			
3/4 Minute				7 Minutes			
1 Minute				8 Minutes			
2 Minutes				9 Minutes			
3 Minutes				10 Minutes			
4 Minutes				10/1 Minutes			
				Ratio			

Remarks:

PART 2 - PRODUCTS

2.01 PRODUCT REQUIREMENTS

A. Unless otherwise indicated, the materials to be provided under this Specification shall be the products of manufacturers regularly engaged in the production of all such items and shall be the manufacturer's latest design. The products shall conform to the applicable standards of UL and NEMA, unless specified otherwise. International Electrotechnical Commission (IEC) standards are not recognized. Equipment designed, manufactured, and labeled in compliance with IEC standards is not acceptable.

B. All items of the same type or ratings shall be identical. This shall be further understood to include products with the accessories indicated.

C. All equipment and materials shall be new, unless indicated or specified otherwise.

D. The Contractor shall submit proof if requested by the Engineer that the materials, appliances, equipment, or devices that are provided under this Contract meet the requirements of Underwriters Laboratories, Inc., in regard to fire and casualty hazards. The label of or listing by the Underwriters Laboratories, Inc., will be accepted as conforming with this requirement.

2.02 SUBSTITUTIONS

A. Any reference in the Specifications or on the Drawings to any article, service, product, material, fixture, or item of equipment by name, make, or catalog number shall be interpreted as establishing the type, function, and standard of quality and shall not be construed as limiting competition.

2.03 CONCRETE

A. The Contractor shall furnish all concrete required for the installation of all electrical Work, Concrete shall be as specified. Concrete and reinforcing steel shall meet the appropriate requirements as indicated on the Contract Drawings.

B. The Contractor shall provide concrete equipment pads for all freestanding electrical apparatus and equipment located on floors or slabs that exist or provided by others. The Contractor shall provide all necessary anchor bolts, channel iron sills, and other materials as required. The exact location and dimensions shall be coordinated for each piece of equipment well in advance of the scheduled placing of these pads. Equipment pads shall be 4 inches high unless otherwise indicated on the Drawings and shall conform to standard detail for equipment pads shown on the Contract Drawings. Equipment pads shall not have more than 3” excess concrete beyond the edges of the equipment.

C. The Contractor shall provide concrete foundations for all free standing electrical apparatus and equipment located outdoors or where floors or slabs do not exist or provided by others. The Contractor shall provide all necessary anchor bolts, channel iron sills, and other materials as required. The location and dimensions shall be coordinated for each piece of equipment well in advance of the scheduled placing of the foundations. Equipment foundations shall be constructed as detailed on the Drawings or if not detailed on the Drawings shall be 6 inches thick minimum reinforced with #4 bars at 12-inch centers each

way placed mid-depth. Concrete shall extend 6 inches minimum beyond the extreme of the equipment base and be placed on a compacted stone bed (#57 stone) 6 inches thick minimum.

2.04 RUBBER MATS

A. A three-foot-wide rubber mat shall be furnished and installed on the floor and in front of each piece of electrical equipment that is installed indoors. Rubber mats shall not be installed outdoors. The mat shall be long enough to cover the full length of the equipment. The mat shall be 1/4 inch thick with beveled edges, canvas back, solid-type with corrugations running the entire length of the mat. The mat shall be guaranteed extra quality, free from cracks, blow holes, or other defects detrimental to their mechanical or electrical strength. The mat shall meet OSHA requirements and the requirements of ANSI/ASTM D-178 J6-7 for Type 2, Class 2 insulating matting.

B. Mats shall be provided for the following equipment:

1. PLC/RTU Enclosures
2. Main Circuit Breaker
3. Automatic Transfer Switch
4. Variable Frequency Drives
5. Panelboards
6. Transformers

PART 3 - EXECUTION

3.01 CUTTING AND PATCHING

A. Coordination

1. All cutting and patching shall be in completed in accordance with the applicable requirements of Section 01045 – Execution of Work.

2. The Work shall be coordinated between all trades to avoid delays and unnecessary cutting, channeling and drilling. Sleeves shall be placed in concrete for passage of conduit wherever possible.

B. Damage

1. The Contractor shall perform all chasing, channeling, drilling and patching necessary to the proper execution of his Contract. Any damage to the building, structure, or any equipment shall be repaired by qualified mechanics of the trades involved at the Contractor's expense. If, in the Engineer's judgment, the repair of damaged equipment would not be satisfactory, then the Contractor shall replace damaged equipment at his own expense.

3.02 EXCAVATION AND BACKFILLING

A. The Contractor shall perform all excavation and backfill required for the installation of all electrical work. All excavation and backfilling shall be in complete accordance with the applicable requirements of Division 02.

3.03 CORROSION PROTECTION

A. Wherever dissimilar metals, except conduit and conduit fittings, come into contact, the Contractor shall isolate these metals as required with neoprene washers, nine (9) mil polyethylene tape, or gaskets.

[END OF SECTION]

SECTION 16111

CONDUIT

PART 1 - GENERAL

1.01 THE REQUIREMENT

A. The Contractor shall furnish and install conduits and conduit fittings to complete the installation of all electrically operated equipment as specified herein, indicated on the Drawings, and as required.

B. Requirements for conduit clamps, support systems, and anchoring are not included in this Section. Reference Section 16190 - Supporting Devices, for these requirements.

C. Reference Section 16000 - Basic Electrical Requirements.

1.02 CODES AND STANDARDS

A. Conduits and conduit fittings shall be designed, manufactured, and/or listed to the following standards as applicable:

1. American National Standards Institute (ANSI)

    a. ANSI B1.20.1 – Pipe Threads, General Purpose

    b. ANSI C80.1 – Electrical Rigid Steel Conduit

    c. ANSI C80.3 – Steel Electrical Metallic Tubing

    d. ANSI C80.5 – Electrical Rigid Aluminum Conduit

    e. ANSI FB 1 – Fittings, Cast Metal Boxes, and Conduit Bodies for Conduit, Electrical Metallic Tubing, and Cable

2. Underwriters Laboratories (UL)

    a. UL 1 – Standard for Flexible Metal Conduit

    b. UL 6 - Electrical Rigid Metal Conduit-Steel

    c. UL 6A – Electrical Rigid Metal Conduit-Aluminum, Red Brass, and Stainless Steel

    d. UL 360 – Standard for Liquid-tight Flexible Metal Conduit

    e. UL 467 – Grounding and Bonding Equipment

    f. UL 514B – Conduit, Tubing, and Cable Fittings

g. UL 651 – Standard for Schedule 40 and 80 Conduit and Fittings

h. UL 797 – Electrical Metallic Tubing-Steel

i. UL 1203 - Standard for Explosion-proof and Dust-ignition-proof Electrical Equipment for use in Hazardous (Classified) Locations

j. UL 1479 – Standard for Fire Tests of Penetration Fire Stops

k. UL 1660 – Liquid-tight Flexible Nonmetallic Conduit

3. National Electrical Manufacturer's Association (NEMA)

a. NEMA RN 1 – PVC Externally Coated Galvanized Rigid Steel Conduit

b. NEMA TC-2 – Electrical PVC Conduit

c. NEMA TC-3 – PVC Fittings for Use with Rigid PVC Conduit and Tubing

B. Others

1. ACI-318 – Building Code Requirements for Structural Concrete

1.03 SUBMITTALS

A. In accordance with the procedures and requirements set forth in the General Conditions, the Contractor shall obtain from the equipment manufacturer and submit the following:

1. Shop Drawings

B. Each submittal shall be identified by the applicable specification section.

1.04 SHOP DRAWINGS

A. Each submittal shall be complete in all respects, incorporating all information and data listed herein and all additional information required for evaluation of the proposed equipment's compliance with the Contract Documents.

B. Partial, incomplete, or illegible submittals will be returned to the Contractor without review for resubmittal.

C. Shop drawings shall include but not be limited to:

1. Product data sheets for conduits and fittings.

2. Conduit identification methods and materials.

3. Evidence of training for all personnel that will install PVC coated rigid metal conduit.

1.05 DEFINITIONS

A. Conduits are categorized by the circuit type of the wiring to be installed inside. Conduits are defined as follows:

1. Power Conduits – Conduits that carry AC or DC power wiring from a source to a load. Conduits that carry lighting and receptacle wiring.

2. Control Conduits – Conduits that carry AC or DC discrete control wiring between devices and/or equipment. Conduits that carry fiber optic cables between devices and/or equipment.

3. Instrumentation Conduits – Conduits that carry AC or DC analog signal wiring between devices and/or equipment.

B. Conduit categories are indicated on the Drawings by the leading letter of the conduit tag. Conduit tag leading letters are defined as follows:

1. P – Power Conduit

2. C – Control Conduit

3. I – Instrumentation Conduit

PART 2 – PRODUCTS

2.01 GENERAL

A. Conduit and conduit fitting products are specified in the text that follows this article. Reference Part 3 herein for the application, uses and installation requirements of these conduits and conduit fittings.

B. All metallic conduit fittings shall be UL 514B and UL 467 Listed, and constructed in accordance with ANSI FB 1. All metallic conduit fittings for use in Class I Division I hazardous areas shall be UL 1203 Listed. All non-metallic fittings shall be UL 651 Listed and constructed in accordance with NEMA TC-3.

C. Flexible conduit couplings for use in Class I Division I hazardous areas shall have threaded stainless steel end fittings and a flexible braided core. Flexible braid shall be constructed of stainless steel where available in the conduit trade size required for the application. Where stainless steel braid is not available, the braid shall be provided with a PVC coating. No other braid types or materials are acceptable.

D. Where threading is specified herein for conduit fitting connections, the fittings shall be manufactured to accept conduit that is threaded to ANSI B1.20.1 requirements.

E. Conduit expansion fittings for all conduit materials of construction shall be capable of 4 inches of movement along the axis of the conduit for trade sizes 2 inches or less. Expansion fittings shall be capable of 8 inches of movement along the axis of the conduit for trade sizes greater than 2 inches.

F. Conduit deflection fittings for all conduit materials of construction shall be provided with a flexible neoprene outer jacket that permits up to ¾ inch of expansion/contraction along the axis of the conduit as well as up to ¾ inch of parallel misalignment between the conduit axes. Outer jacket shall be secured to the conduit hubs by stainless steel clamps.

G. Conduit seals shall either be Listed and labeled for 40% fill, or conduit reducing fittings and a trade size larger conduit seal shall be provided to achieve 25% or less fill within the seal. Percentage fill calculation shall be based on the conductors to be installed. Conduit seals shall be provided with breathers and/or drains where required by the NEC.

H. Conduit insulating bushings shall be constructed of plastic and shall have internal threading.

I. Additional conduit and conduit fitting requirements are specified in the articles that follow based on the specific conduit material of construction to be used.

2.02 PVC COATED RIGID ALUMINUM CONDUIT AND ASSOCIATED FITTINGS

A. General

1. Where an external coating of polyvinyl chloride (PVC) is specified for conduit and fittings, the coating shall be 40 mil (minimum) thickness. Where an internal coating of urethane is specified for conduit and fittings, the coating shall be 2 mil (minimum) thickness.

2. All conduit fittings shall have a sealing sleeve constructed of PVC which covers all connections to conduit. Sleeves shall be appropriately sized so that no conduit threads will be exposed after assembly.

B. Conduit

1. Conduit shall be hot dip galvanized on the inside and outside, and made of heavy wall high strength ductile steel. Conduit shall be manufactured in accordance with ANSI C80.1, and shall be UL 6 Listed.

2. Conduit shall be provided with factory-cut 3/4 inch per foot tapered threads at each end in accordance with ANSI B1.20.1. Threads shall be cut prior to galvanizing to ensure corrosion protection adequately protects the threads. Conduit shall be provided with a matching coupling on one end and a color-coded thread protector on the other.

3. Conduit shall be coated on the exterior with a PVC jacket and coated on the interior with a layer of urethane. Conduit shall be manufactured in accordance with NEMA RN-1.

C. Conduit Bodies for use with PVC Coated Rigid Galvanized Steel Conduit

1. Conduit bodies shall be constructed of an electro-galvanized malleable iron alloy which is coated on the exterior with a PVC jacket and coated on the interior with a layer of urethane. Conduit bodies shall have integral threaded conduit hubs.

2. Conduit bodies for Class I Division I hazardous areas shall be provided with integrally threaded covers constructed of an electro-galvanized malleable iron alloy which is coated on the exterior with a PVC jacket and coated on the interior with a layer of urethane.

3. Conduit bodies for all other areas shall be constructed of an electro-galvanized malleable iron alloy which is coated on the exterior with a PVC jacket and coated on the interior with a layer of urethane. Covers shall be affixed in place by stainless steel screws which thread directly into the conduit body and have a plastic encapsulated head. Covers that utilize wedge nuts or any other method of attachment to the conduit body are not acceptable. Covers shall be provided with matching gasket.

D. Conduit Couplings, Nipples, and Unions for use with PVC Coated Rigid Galvanized Steel Conduit

1. Couplings and nipples shall be threaded and shall be constructed of hot dipped galvanized steel which is coated on the exterior with a PVC jacket and coated on the interior with a layer of urethane. Split-type couplings that use compression to connect conduits are not acceptable.

2. Unions shall be threaded, rain-tight, and constructed of an electro-galvanized malleable iron alloy which is coated on the exterior with a PVC jacket and coated on the interior with a layer of urethane.

E. Conduit Expansion and Deflection Fittings for use with PVC Coated Rigid Galvanized Steel Conduit

1. Conduit expansion fittings and conduit deflection fittings shall be constructed of an electro-galvanized malleable iron alloy which is coated on the exterior with a PVC jacket and coated on the interior with a layer of urethane. Expansion and deflection fittings shall have threaded conduit connections.

2. Expansion fittings shall have an integral bonding jumper and deflection fittings shall have an external bonding jumper.

F. Conduit Seals for use with PVC Coated Rigid Galvanized Steel Conduit

1. Conduit seals shall be constructed of an electro-galvanized malleable iron alloy which is coated on the exterior with a PVC jacket and coated on the interior with a layer of urethane. Conduit seals shall have threaded conduit connections.

G. Conduit Termination Fittings for Use with PVC Coated Rigid Galvanized Steel Conduit

1. Conduit hubs shall be constructed of an electro-galvanized malleable iron alloy which is coated on the exterior with a PVC jacket and coated on the interior with a layer of urethane. Hubs shall have threaded connections to the conduit and enclosure. Hubs shall have a plastic insulated throat and shall be watertight when assembled to an enclosure.

2. Conduit bonding bushings shall be constructed of zinc plated malleable iron which is coated on the exterior with a PVC jacket and coated on the interior with a layer of urethane. Bonding bushings shall have a threaded conduit connection. Bonding bushing shall be provided with properly sized set screw for connecting bonding conductor and an integral plastic insulator rated for 150 degrees C located in the throat.

2.03 RIGID ALUMINUM CONDUIT AND ASSOCIATED FITTINGS

A. Conduit

1. Conduit shall be made of heavy wall high strength 6063 alloy aluminum with temper designation T1. Conduit shall be manufactured in accordance with ANSI C80.5, and shall be UL 6A Listed.

2. Conduit shall be provided with factory-cut 3/4 inch per foot tapered threads at each end in accordance with ANSI B1.20.1. Threads shall be cut prior to galvanizing to ensure corrosion protection adequately protects the threads. Conduit shall be provided with a matching coupling on one end and a color-coded thread protector on the other.

B. Conduit Bodies for use with Rigid Aluminum Conduit

1. Conduit bodies shall be constructed of copper-free aluminum which is coated with an aluminum enamel finish. Conduit bodies shall have integral threaded conduit hubs.

2. Conduit bodies for Class I Division I hazardous areas shall be provided with integrally threaded covers constructed of copper-free aluminum which is coated with an aluminum enamel finish.

3. Conduit bodies for all other areas shall be provided with stamped copper-free aluminum covers that are affixed in place by stainless steel screws which thread directly into the conduit body. Covers that utilize wedge nuts or any other method of attachment to the conduit body are not acceptable. Covers shall be provided with matching gasket.

C. Conduit Couplings, Nipples, and Unions for use with Rigid Aluminum Conduit

1. Couplings and nipples shall be threaded and shall be constructed of heavy wall high strength 6063 alloy aluminum with temper designation T1. Split-type couplings that use compression to connect conduits are not acceptable.

2. Unions shall be threaded, rain-tight, and constructed of copper-free aluminum which is coated with an aluminum enamel finish.

D. Conduit Expansion and Deflection Fittings for use with Rigid Aluminum Conduit

1. Conduit expansion fittings and conduit deflection fittings shall be constructed of copper-free aluminum which is coated with an aluminum enamel finish. Expansion and deflection fittings shall have threaded conduit connections.

2. Expansion fittings shall have an integral bonding jumper and deflection fittings shall have an external bonding jumper.

E. Conduit Seals for use with Rigid Aluminum Conduit

1. Conduit seals shall be constructed of copper-free aluminum which is coated with an aluminum enamel finish. Conduit seals shall have threaded conduit connections.

F. Conduit Termination Fittings for use with Rigid Aluminum Conduit

1. Conduit hubs shall be constructed of copper-free aluminum and shall have threaded connections to the conduit and enclosure. Hubs shall have a plastic insulated throat and shall be watertight when assembled to an enclosure.

2. Conduit locknuts shall be constructed of copper-free aluminum. Locknuts shall have internal threading. Locknuts with integral gasket or seal are not acceptable. Locknuts shall have integral bonding screw where required for proper bonding.

3. Conduit bonding bushings shall be constructed of copper-free aluminum. Bonding bushings shall have a threaded conduit connection. Bonding bushing shall be provided with properly sized set screw for connecting bonding conductor and an integral plastic insulator rated for 150 degrees C located in the throat.

2.04 LIQUID TIGHT FLEXIBLE METAL CONDUIT (LFMC) AND ASSOCIATED FITTINGS

A. Conduit

1. Conduit shall be manufactured using a single strip of hot dip galvanized high strength steel alloy, helically formed into a continuously interlocked flexible metal conduit. Trade size 1-1/4 inch and smaller conduits shall be provided with an integrally woven copper bonding strip.

2. Conduit shall be covered with an outside PVC jacket that is UV resistant, moisture-proof, and oil-proof. Conduit shall be UL 360 Listed.

B. Conduit Termination Fittings for use with LFMC

1. Conduit termination fittings shall be constructed of either 304 stainless steel or an electro-galvanized malleable iron alloy which is coated on the exterior with a 40 mil (minimum) PVC jacket and coated on the interior with a 2 mil (minimum) layer of urethane. PVC coated fittings shall have a sealing sleeve constructed of PVC which covers the connection to conduit.

2. Termination fittings shall have a threaded end with matching locknut and sealing ring for termination to equipment, and shall have an integral external bonding lug where required for proper bonding. Termination fittings shall have a plastic insulated throat and shall be watertight when assembled to the conduit and equipment.

2.05 LIQUID TIGHT FLEXIBLE NONMETALLIC CONDUIT (LFNC) AND ASSOCIATED FITTINGS

A. Conduit

1. Conduit shall be constructed of rigid polyvinyl chloride (PVC), fabricated to provide flexibility. Conduit shall be covered with an outside PVC jacket that is UV resistant, moisture-proof, and oil-proof. Conduit shall be UL 1660 Listed.

B. Conduit Termination Fittings for use with LFNC

1. Conduit termination fittings shall be constructed PVC and shall have a threaded end with matching locknut and sealing ring for termination to equipment. Termination fittings shall be watertight when assembled to the conduit and equipment.

2.06 FLEXIBLE METAL CONDUIT (FMC) AND ASSOCIATED FITTINGS

A. Conduit

1. Conduit shall be manufactured using a single strip of hot dip galvanized high strength steel alloy, helically formed into a continuously interlocked flexible metal conduit. Conduit shall be UL 1 Listed.

B. Conduit Termination Fittings for use with FMC

1. Conduit termination fittings shall be constructed of an electro-galvanized malleable iron alloy. Fittings shall have a threaded end with matching locknut for termination to equipment, and a compression-style connection to the associated conduit.

2.07 ELECTRICAL METALLIC TUBING (EMT) AND ASSOCIATED FITTINGS

A. Conduit

1. Conduit shall be hot dipped galvanized on the inside and outside, and made of cold-rolled steel tubing. Conduit shall be manufactured in accordance with C80.3 and shall be UL 797 listed.

B. Conduit Bodies for use with EMT

1. Conduit bodies shall be constructed of an electro-galvanized malleable iron alloy which is coated with an acrylic paint finish. Conduit bodies shall have integral threaded conduit hubs.

2. Conduit bodies shall be provided with galvanized sheet steel covers that are affixed in place by stainless steel screws which thread directly into the conduit body. Covers that utilize wedge nuts or any other method of attachment to the conduit body are not acceptable. Covers shall be provided with matching gasket.

C. Conduit Couplings and Nipples for use with EMT

1. Couplings and nipples shall have threaded compression connectors with associated gland and shall be constructed of electro-galvanized steel. Fittings utilizing a set screw or indenter tool to secure the associated conduit to the fitting are not acceptable. Couplings and nipples shall be rain-tight and have a plastic insulated throat.

D. Conduit Expansion and Deflection Fittings for use with EMT

1. Conduit expansion fittings and conduit deflection fittings shall be constructed of an electro-galvanized malleable iron alloy which is coated with an acrylic paint finish. Expansion and deflection fittings shall have threaded conduit connections.

2. Expansion fittings shall have an integral bonding jumper and deflection fittings shall have an external bonding jumper.

E. Conduit Termination Fittings for use with EMT

1. Conduit termination fittings shall be constructed of electro-galvanized steel and have a plastic insulated throat. Termination fittings shall have a threaded compression connector with associated gland on one end and external threads on the other end. Termination fittings utilizing a set screw or indenter tool to secure the associated conduit to the fitting are not acceptable.

2. Conduit locknuts shall be constructed of zinc plated steel. Locknuts shall have internal threading. Locknuts shall have integral bonding screw where required for proper bonding.

2.08 CONDUIT BENDS

A. Rigid conduit bends, both factory fabricated and field fabricated, shall meet the same requirements listed in the articles above for the respective conduit type and material of construction.

B. Conduit bend radii for standard radius bends shall be no less than as follows:

TRADE SIZE (inches)	3/4	1	1-1/4	1-1/2	2	2-1/2	3	3-1/2	4	5	6
MIN. RADIUS (inches)	4-1/2	5-3/4	7-1/4	8-1/4	9-1/2	10-1/2	13	15	16	24	30

C. Conduit bend radii for long radius bends shall be no less than as follows:

TRADE SIZE (inches)	3/4	1	1-1/4	1-1/2	2	2-1/2	3	3-1/2	4	5	6
MIN. RADIUS (inches)	N/A	12	18	24	30	30	36	36	48	48	60

2.09 MISCELLANEOUS

A. Conduit Periphery Sealing

1. The sealing of the exterior surface of conduits to prevent water and/or air from passing around the conduit periphery from one space to another (where required) shall be through the use of one of the following:

a. A conduit sleeve and pressure bushing sealing system. Acceptable products are FSK by OZ-GEDNEY, Link-Seal by Crouse-Hinds, or Engineer approved equal.

b. A conduit sleeve that is two trade sizes larger than the conduit being sealed, with 2-hour fire rated UL 1479 Listed caulk filling the entire void between the conduit and sleeve. This method is only suitable for penetrations in non-fire rated walls and floors between spaces within buildings. This method shall not be used for the sealing of conduits leaving a building and/or structure.

2. Conduit penetrations through fire-rated walls and floors shall be made with an approved UL 1479 Listed product specifically intended for the trade size of the conduit.

B. Primer and Cement

1. Nonmetallic conduit shall be cleaned with primer and connected to fittings with the manufacturer's recommended cement that is labeled Low VOC.

C. Galvanizing Compounds

1. Galvanizing compounds for field application shall be the cold-applied type, containing no less than 93% pure zinc.

D. Conduit Interior Sealing

1. The sealing of the inside of conduits against water ingress shall be achieved through the use of one of the following:

a. Two-part expanding polyurethane foam sealing compound, dispensed from a single tube which mixes the two parts as it is injected into the conduit. Expanding foam shall be compatible with the conduit material of construction as well as the outer jacket of the cables in the conduit. Acceptable products are Q-Pak 2000 by Chemque, FST by American Polywater Corporation, or Hydra-seal S-60 by Duraline.

b. Inflatable bag that provides seal around cables and around inside diameter of conduit. Provide appropriate quantity of additional fittings for applications with three or more cables in the conduit to be sealed. Acceptable products are Rayflate by Raychem, or Engineer approved

equal. This sealing method is only applicable to conduits trade size 2 inch and larger.

c. Neoprene sealing ring provided with the required quantity and diameter of holes to accommodate the cables in each conduit. Sealing ring shall be compressed by two stainless steel pressure plates. Acceptable products are type CSB by OZ-GEDNEY, or Engineer approved equal. This sealing method is only applicable to metallic conduits containing 4 or less cables.

2. The use of aerosol-based expanding foam sealants or any other method of sealing against water ingress not listed above is not acceptable.

E. Pull Rope

1. Pull ropes for empty and/or spare conduits shall be woven polyester, 1/2 inch wide, with a minimum tensile strength of 1250 lbs.

2. Pull ropes for the Contractor's use in installing conductors shall be the size and strength required for the pull, and shall be made of a non-metallic material.

PART 3 – EXECUTION

3.01 GENERAL

A. Minimum trade size for all rigid conduits shall be 3/4 inch in exposed applications and 1 inch in embedded applications. Conduits installed within ductbanks shall be allowed to be increased in size to trade size 2 inch, at the Contractor's option, to accommodate the saddle size of the ductbank spacers. However, no combining of circuits shall be allowed in the larger conduits.

B. Minimum trade size for flexible conduits (where specifically allowed herein) shall be 1/2 inch in all applications.

C. Conduit routing and/or homeruns within structures is not shown on the Drawings. Conduits shall be installed concealed wherever practical and within the limitations specified herein. All other conduits not capable of being installed concealed shall be installed exposed.

D. Empty and/or spare conduits shall be provided with pull ropes which have no less than 12 inches of slack at each end.

E. Nonmetallic conduits for installations requiring less than a factory length of conduit shall be field cut to the required length. The cut shall be made square, cleaned of debris, and primer shall be applied to ready each joint for fusing. Conduits shall then be fused together with the conduit manufacturer's approved cement compound.

F. Metallic conduits for installations requiring less than a factory length of conduit shall be field cut to the required length. The cut shall be made square, be cleaned of all debris

and be de-burred, then threaded. Conduit threading performed in the field shall be ¾ inch per foot tapered threads in accordance with ANSI B1.20.1.

G. Conduits shall be protected from moisture, corrosion, and physical damage during construction. Install dust-tight and water-tight conduit fittings on the ends of all conduits immediately after installation and do not remove until conductors are installed.

H. Conduits shall be installed to provide no less than 12 inches clearance from pipes that have the potential to impart heat upon the conduit. Such pipes include, but are not limited to, hot water pipes, steam pipes, exhaust pipes, and blower air pipes. Clearance shall be maintained whether conduit is installed in parallel or in crossing of pipes.

I. Where non-metallic instrumentation conduits are installed exposed, the following clearances to other conduit types shall be maintained:

1. Instrumentation conduits installed parallel to conduits with conductors energized at 480V or above shall be 18 inches.

2. Instrumentation conduits installed parallel to conduits with conductors energized at 240V and below shall be 12 inches.

3. Instrumentation conduits installed at right angles to conductors energized at 480V and below shall be 6 inches.

4. Instrumentation conduits installed at right angles to conductors energized at voltages above 480V shall be 12 inches.

J. Where conduit fittings do not include an integral insulated bushing, an insulated bushing shall be installed at all conduit termination points.

K. Conduits which serve multi-section equipment shall be terminated in the section where wiring terminations will be made.

L. Conduits shall not penetrate the floors or walls inside liquid containment areas without specific written authorization from the Engineer. Liquid containment areas are indicated on the Drawings.

M. In no case shall conduit be supported or fastened to another pipe or be installed in a manner that would prevent the removal of other pipes for repairs. Spring steel fasteners may only be used to affix conduits containing lighting branch circuits within EMT conduits to structural steel members.

N. All field fabricated threads for rigid galvanized steel conduit shall be thoroughly coated with two coats of galvanizing compound, allowing at least two minutes to elapse between coats for proper drying.

O. The appropriate specialized tools shall be used for the installation of PVC coated conduit and conduit fittings. No damage to the PVC coating shall occur during installation. Conduit and conduit fittings with damaged PVC coating shall be replaced at the Contractor's cost. The use of PVC coating touch-up compounds is not permitted.

P. Conduits which emerge from within or below concrete encasement shall be PVC coated rigid galvanized steel where the conduit is not protected by an equipment enclosure that surrounds the conduit on all sides at the point where it emerges from the encasement.

Q. Aluminum conduits shall not be installed in direct contact with concrete surfaces. Where aluminum conduits are routed along concrete surfaces, they shall be installed with one-hole electro-galvanized malleable iron alloy straps with matching clamp-backs to space the conduit ¼ inch away from concrete surface. Where aluminum conduit passes through concrete, CMU or brick walls, the penetration shall be made such that the aluminum conduit does not come in contact with concrete, CMU, brick or mortar.

3.02 CONCEALED AND EMBEDDED CONDUITS

A. Conduits are permitted to be installed concealed and/or embedded with the following requirements:

1. Conduits shall not be installed horizontally when concealed within CMU walls, only vertical installation is acceptable.

2. Conduits installed embedded within concrete floors or walls shall be located so as not to affect the designed structural strength of the floor or wall. Embedded conduits shall be installed in accordance with ACI-318.

3. Where conduit bends emerge from concrete embedment, none of the curved portion of the bend shall be visible. Only the straight portion of the bend shall be visible.

4. Where multiple conduits emerge from concrete embedment or from concealment below a concrete floor, ample clear space shall be provided between conduits to allow for the appropriate and required conduit termination fittings to be installed.

5. Conduits installed embedded within concrete encasement of any kind shall be installed such that conduit couplings for parallel conduits are staggered so that they are not side by side.

B. Conduits are not permitted to be installed concealed and/or embedded for the following situations:

1. Conduits shall not be installed embedded within any water-bearing floors or walls. Conduits shall not be installed embedded within any liquid containment area floors or walls.

2. Conduits shall not be installed concealed within CMU walls or gypsum walls that are adjacent to Class I and II hazardous areas (Division I and Division II).

3. Conduits shall not be installed concealed within CMU walls or gypsum walls that are adjacent to indoor Type 1 or Type 2 chemical storage/transfer areas.

3.03 CONDUIT USES AND APPLICATIONS

A. Rigid Conduit

1. Rigid conduit for non-hazardous areas shall be furnished and installed in the materials of construction as follows:

RIGID CONDUIT FOR NON-HAZARDOUS AREAS		
INSTALLATION AREA DESIGNATION/ SCENARIO	**CONDUIT CATEGORY BY WIRING/CIRCUIT TYPE**	
	Power and Control	**Instrumentation**
Exposed in indoor wet process areas	Rigid aluminum conduit	Same as Power and Control
Exposed in indoor dry process areas	Rigid aluminum conduit	Same as Power and Control
Exposed in indoor dry non-process areas	Rigid aluminum conduit	Same as Power and Control
Exposed in indoor Type 1 chemical storage/transfer areas	Schedule 80 rigid non-metallic PVC conduit	Same as Power and Control
Exposed in indoor Type 2 chemical storage/transfer areas	PVC coated rigid galvanized steel conduit	Same as Power and Control
Exposed in outdoor areas	Rigid aluminum conduit	Same as Power and Control
Exposed within pre-fabricated electrical equipment center buildings	Electrical Metallic Tubing	Same as Power and Control
Concealed within underground direct-bury or concrete-encased ductbanks	Schedule 40 rigid non-metallic PVC conduit	PVC coated rigid galvanized steel conduit
Concealed within non-elevated (i.e. "slab-on-grade" construction) concrete slabs	Schedule 40 rigid non-metallic PVC conduit	Rigid galvanized steel conduit
Concealed within elevated concrete slabs	Rigid galvanized steel conduit	Same as Power and Control
Concealed below concrete slabs (within earth or fill material)	Schedule 40 rigid non-metallic PVC conduit	Rigid galvanized steel conduit
Concealed within concrete walls	Schedule 40 rigid non-metallic PVC conduit	Rigid galvanized steel conduit
Concealed within CMU walls	Schedule 40 rigid non-metallic PVC conduit or Electrical Metallic Tubing	Rigid galvanized steel conduit or Electrical Metallic Tubing
Concealed above suspended ceilings	Electrical Metallic Tubing	Same as Power and Control
Concealed within interior walls constructed of metal studs and gypsum wall board	Electrical Metallic Tubing	Same as Power and Control
Emerging from concealment within or below a concrete floor and transitioning to exposed conduit	PVC coated rigid aluminum conduit	Same as Power and Control

2. Rigid conduit for hazardous areas shall be furnished and installed in the materials of construction as follows:

RIGID CONDUIT FOR HAZARDOUS AREAS		
	CONDUIT CATEGORY BY WIRING/CIRCUIT TYPE	
INSTALLATION AREA HAZARD/SCENARIO	Power and Control	Instrumentation
Exposed in Class I and II areas (Division I and Division II)	Rigid aluminum conduit	Same as Power and Control
Concealed within concrete slabs in Class I and II areas (Division I and Division II)	Rigid galvanized steel conduit	Same as Power and Control
Concealed below concrete slabs (within earth or fill material) in Class I and II areas (Division I and Division II)	Rigid galvanized steel conduit	Same as Power and Control
Concealed within concrete walls in Class I and II areas (Division I and Division II)	Rigid galvanized steel conduit	Same as Power and Control
Concealed below concrete slabs encased in at least two inches of concrete and buried 24 inches below top of slab in Class I Division I areas	Schedule 40 rigid non-metallic PVC conduit	Rigid galvanized steel conduit
Concealed above suspended ceilings in Class I and II areas (Division I and Division II)	Rigid aluminum conduit	Same as Power and Control

3. The tables for the materials of construction for rigid conduits are intended to exhaustively cover all possible scenarios and installation areas under this Contract. However, if a scenario or installation area is found that is not explicitly governed by these tables, it shall be assumed for bid purposes that the conduit material of construction is to be rigid galvanized steel. This discrepancy shall be brought to the attention of the Engineer (in writing) immediately for resolution.

B. Conduit Bends

1. All conduit bends shall be the same material of construction as the rigid conduit listed in the tables above, with the following exceptions:

   a. All 90 degree bends or combinations of adjacent bends that form a 90 degree bend where concealed within concrete or below a concrete slab shall be rigid galvanized steel.

2. Field fabricated bends of metallic conduit shall be made with a bending machine and shall have no kinks. Field fabricated standard radius and long radius bends shall have minimum bending radii in accordance with the associated tables in Part 2 herein.

3. Field bending of non-metallic conduits is not acceptable, factory fabricated bends shall be used.

4. Long radius bends shall be furnished and installed for the following specific applications, all other bends shall be standard radius:

    a. All conduits containing medium voltage cable.

    b. All conduits containing fiber optic cable.

    c. All conduits containing shielded VFD cable.

    d. Where specifically indicated on the Drawings.

C. Flexible Conduit

1. Flexible conduit shall only be installed for the limited applications specified herein. Flexible conduit shall not be installed in any other application without written authorization from the Engineer. Acceptable applications are as follows:

    a. Connections to motors and engine-generator sets (and similar vibrating equipment)

    b. Connections to solenoid valves and limit switches

    c. Connections to lighting fixtures installed in suspended ceilings

    d. Connections to lighting transformers

    e. Connections to pre-fabricated equipment skids

    f. Connections to HVAC equipment

    g. Connections to instrument transmitters and elements

    h. Where specifically indicated in the Standard Details

2. Flexible conduit length shall be limited to three (3) feet, maximum. Flexible conduit shall not be installed buried or embedded within any material.

3. Flexible conduit for non-hazardous areas shall be furnished and installed in the materials of construction as follows:

FLEXIBLE CONDUIT FOR NON-HAZARDOUS AREAS		
INSTALLATION AREA DESIGNATION/SCENARIO	**CONDUIT CATEGORY BY WIRING/CIRCUIT TYPE**	
	Power and Control	**Instrumentation**
Exposed in indoor wet process areas	Liquid-tight flexible metal conduit	Same as Power and Control
Exposed in indoor dry process areas	Flexible metal conduit	Same as Power and Control
Exposed in indoor dry non-process areas	Flexible metal conduit	Same as Power and Control
Exposed in indoor Type 1 chemical storage/transfer areas	Liquid-tight flexible non-metallic conduit	Same as Power and Control
Exposed in indoor Type 2 chemical storage/transfer areas	Liquid-tight flexible metal conduit	Same as Power and Control
Exposed in outdoor areas	Liquid-tight flexible metal conduit	Same as Power and Control
Concealed above suspended ceilings (all indoor areas)	Same material as exposed conduit in same area	Same as Power and Control

4. For Class I Division I hazardous areas, the NEC does not permit the installation of flexible conduit. In lieu of flexible conduit in these areas, flexible conduit couplings shall be installed as specified in Part 2 herein. Flexible conduit for all other hazardous areas shall be furnished and installed in the materials of construction as follows:

FLEXIBLE CONDUIT FOR HAZARDOUS AREAS		
INSTALLATION AREA HAZARD/SCENARIO	**CONDUIT CATEGORY BY WIRING/CIRCUIT TYPE**	
	Power and Control	**Instrumentation**
Exposed in Class I Division II areas	Liquid-tight flexible metal conduit	Same as Power and Control
Exposed in Class II (Division I and Division II) areas	Liquid-tight flexible metal conduit	Same as Power and Control
Concealed above suspended ceilings in Class I and II (Division I and Division II) areas	Same material as exposed conduit in same area	Same as Power and Control

3.04 CONDUIT FITTING USES AND APPLICATIONS

A. General

1. Conduit fittings shall be furnished and installed in the materials of construction as indicated in Part 2, herein. Conduit fitting materials of construction are dependent on the material of construction used for the associated conduit.

2. Conduit fittings shall be provided in the trade size and configuration required to suit the application.

B. Conduit Bodies

1. Conduit bodies shall be installed where wire pulling points are desired or required, or where changes in conduit direction or breaking around beams is required.

2. Where conduit bodies larger than trade size 2 inches are intended to be used as a pull-through fitting during wire installation, oversized or elongated conduit bodies shall be used. Oversized or elongated conduit bodies shall not be required if the conduit body is intended to be used as a pull-out point during wire installation.

C. Conduit Nipples and Unions

1. Conduits with running threads shall not be used in place of 3-piece couplings (unions) or close nipples. After installation of a conduit fitting of any kind, there shall be no more than ¼ inch of exposed threads visible. Factory fabricated all-thread nipples may be used between adjacent enclosures, however, the same restriction applies regarding the length of exposed threads that are visible.

D. Conduit Expansion and Deflection Fittings

1. Conduit expansion fittings shall be installed where required by the NEC and where indicated on the Drawings. Expansion fittings shall also be installed for exposed straight metallic conduit runs of more than 75 feet, in both indoor and outdoor locations. Expansion fittings for runs of non-metallic conduit shall be installed in accordance with the NEC.

2. Conduit deflection fittings shall be installed where required by the NEC and where conduits are installed (exposed and concealed) across structural expansion joints.

E. Conduit Seals

1. Conduit seals shall be installed for conduits installed within or associated with hazardous areas and other areas as required by the NEC. In addition, conduit seals shall also be furnished and installed as follows:

a. All conduits entering or leaving enclosed areas which store or distribute chlorine gas.

b. All conduits entering or leaving enclosed areas which store or distribute sulfur dioxide gas.

F. Conduit Termination Fittings

1. Where conduits terminate at enclosures with a NEMA 4, 4X, or 3R rating and the enclosure does not have integral conduit hubs, an appropriately sized watertight conduit hub shall be installed to maintain the integrity of the enclosure. The use of locknuts with integral gasket in lieu of watertight conduit hubs is not acceptable.

2. Where conduits terminate at enclosures that do not require conduit hubs, a two-locknut system shall be used to secure the conduit to the enclosure. One locknut shall be installed on the outside of the enclosure, and the other inside, drawn tight against the enclosure wall. The locknut on the interior of the enclosure shall be the type with integral bonding lug, or a conduit bonding bushing may be used in place of the locknut.

3. Conduits shall not be installed such that conduit fittings penetrate the top of any enclosure located outdoors, except in cases where specifically required by the serving electric utility. Conduits which serve outdoor equipment or an enclosure from above shall instead be routed into the side of the enclosure at the bottom. The conduit termination fitting shall be provided with a conduit drain to divert moisture from the raceway away from the enclosure.

3.05 MISCELLANEOUS

A. Conduit Periphery Sealing

1. All conduit penetrations through exterior walls shall be sealed around the periphery using the appropriate products specified in Part 2 herein to prevent air and/or water entry into the structure.

2. All conduit penetrations through interior walls and floors shall be sealed through the use of with conduit sleeves and caulk as specified in Part 2 herein. Alternatively, mortar may be used to seal around the conduit periphery.

3. Conduit penetrations through fire-rated walls as floors shall be made with the appropriate fire rated penetration product.

B. Conduit Interior Sealing

1. All conduits (including spares) entering a structure below grade shall be sealed on the interior of the conduit against water ingress. Sealing shall be at an accessible location in the conduit system located within the building structure and shall be via one of the methods specified in Part 2 herein. If conduit sealing cannot be achieved at an accessible location within the building structure, sealing shall be placed in the conduits in the nearest manhole or handhole outside the structure.

3.06 CONDUIT IDENTIFICATION

A. The identification system for the conduits furnished and installed under this Contract shall match the existing identification system used at the project location.

B. Exposed conduits shall be identified at the source, load, and all intermediate components of the raceway system. Examples of intermediate components include but are not limited to junction boxes, pull boxes, and disconnect switches. Identification shall be by means of an adhesive label with the following requirements:

1. Labels shall consist of an orange background with black text. Text for the label shall be the conduit number as indicated in the conduit and wire schedules.

2. In addition, at the source end of the conduit, a second line of text shall be included to indicate the load equipment name. This second line shall consist of the word "TO:" and the text in the 'TO' column of the conduit and wire schedule (e.g. TO: Pump No. 1). At the load end of the conduit, a second line of text shall be included to indicate the source equipment name. This second line shall consist of the word "FROM:" and the text in the 'FROM' column of the conduit and wire schedule (e.g. FROM: MCC-SPS). This requirement applies only to the source and load ends of the conduit, and not anywhere in between.

3. For conduits trade sizes 3/4 inch through 1-1/2 inch, the text shall be a minimum 18 point font. For conduits trade size 2 inch and larger, the text shall be a minimum 24 point font.

4. Label height shall be 3/4 inch minimum, and length shall be as required to fit required text. The label shall be installed such that the text is parallel with the axis of the conduit. The label shall be oriented such that the text can be read without the use of any special tools or removal of equipment.

5. Labels shall be installed after each conduit is installed and, if applicable, after painting. Labels shall be printed in the field via the use of a portable label printing system. Handwritten labels are not acceptable.

6. Labels shall be made of permanent vinyl with adhesive backing. Labels made of any other material are not acceptable.

C. Conduits that are not exposed but installed beneath free standing equipment enclosures shall be identified by means of a plastic tag with the following requirements:

1. The tag shall be made of white Tyvek material, and have an orange label with black text, as described above, adhered to it. Text for the label shall be the conduit number as indicated in the conduit and wire schedules.

2. The tag shall be affixed to the conduit by means of a nylon cable tie. The tag shall be of suitable dimensions to achieve a minimum text size of 18 points.

D. Conduits for lighting and receptacle circuits shall not require identification.

E. Any problems or conflicts with meeting the requirements above shall immediately be brought to the attention of the Engineer for a decision.

3.07 TESTING

A. All tests shall be performed in accordance with the requirements of the General Conditions and Division 1. The following tests are required:

1. All conduit installed below grade or concrete encased shall be tested to ensure continuity and the absence of obstructions by pulling through each conduit a swab followed by a mandrel 85% of the conduit inside diameter. After testing, all conduits shall be capped after installation of a suitable pulling rope.

3.08 TRAINING OF INSTALLATION PERSONNEL

A. All Contractor personnel that install PVC coated RGS conduit shall be trained by the PVC coated RGS conduit manufacturer. Training shall include proper conduit system assembly techniques, use of tools appropriate for coated conduit systems, and field bending/cutting/threading of coated conduit. Training shall have been completed within the past 24 months prior to the Notice to Proceed on this Contract to be considered valid. Contractor personnel not trained within this timeframe shall not be allowed to install coated conduit, or shall be trained/re-trained as required prior to commencement of conduit installation.

[END OF SECTION]

SECTION 16123

WIRE AND CABLE

PART 1 - GENERAL

1.01 THE REQUIREMENT

A. The Contractor shall furnish, install, connect, test, and place in satisfactory operating condition, ready for service, all cables and wires indicated on the Drawings and as specified herein or required for proper operation of the installation, with the exception of internal wiring provided by electrical equipment manufacturers. The work of connecting cables to equipment, machinery, and devices shall be considered a part of this Section. All hardware, junction boxes, bolts, clamps, insulators, and fittings required for the installation of cable and wire systems shall be furnished and installed by the Contractor.

B. The wire and cable to be furnished and installed for this project shall be the product of manufacturers who have been in the business of manufacturing wire and cable for a minimum of ten (10) years.

C. Reference Section 16000 - Basic Electrical Requirements.

1.02 TESTING

A. All testing shall be performed in accordance with the requirements of the General Conditions, Division 01, and Section 16000 – Basic Electrical Requirements. The following tests are required:

1. Witness Shop Tests

    a. Not required.

2. Shop Test

    a. Cable and wiring shall be tested in accordance with the applicable ICEA Standards. Wire and cable shall be physically and electrically tested in accordance with the manufacturer's standards.

3. Field Tests

    a. Field testing shall be done in accordance with the requirements specified in the General Conditions, Division 01, and NETA acceptance testing specifications referenced in Section 16000 - Basic Electrical Requirements.

    b. After installation, all wires and cables shall be tested for continuity. Testing for continuity shall be "test light" or "buzzer" style.

    c. After installation, all wires and cables shall be tested for insulation levels. Insulation resistance between conductors of the same circuit and between

conductor and ground shall be tested. Testing for insulation levels shall be as follows:

i. For 600V power and control cable, apply 1,000 VDC from a Megaohmeter for one (1) minute for all 600V wires and cables installed in lighting, control, power, indication, alarm and motor feeder circuits. Resistance shall be no less than 100 Megaohms.

ii. 600V instrumentation signal cable shall be tested from conductor to conductor, conductor to shield, and conductor to ground using a Simpson No. 260 volt-ohmmeter, or approved equal. The resistance value shall be 200 Megaohms or greater.

B. Low voltage wires and cables shall be tested before being connected to motors, devices or terminal blocks.

C. Voltage tests shall be made successively between each conductor of a circuit and all other conductors of the circuit grounded.

D. If tests reveal defects or deficiencies, the Contractor shall make the necessary repairs or shall replace the cable as directed by the Engineer, without additional cost to Owner.

E. All tests shall be made by and at the expense of the Contractor who shall supply all testing equipment. Test reports shall be submitted to the Engineer.

1.03 SUBMITTALS

A. In accordance with the procedures and requirements set forth in the General Conditions, the Contractor shall obtain from the wire and cable manufacturer and submit the following:

1. Shop Drawings

2. Reports of Field Tests

3. Wiring Identification Methods

B. Each submittal shall be identified by the applicable specification section.

1.04 SHOP DRAWINGS

A. Each submittal shall be complete in all respects, incorporating all information and data listed herein and all additional information required for evaluation of the proposed material's compliance with the Contract Documents.

B. Partial, incomplete, or illegible Submittals will be returned to the Contractor without review for resubmittal.

C. Shop drawings shall include but not be limited to:

1. Product data sheets.

2. Cable pulling calculations (if required).

3. Wiring identification methods and materials.

1.05 IDENTIFICATION

A. Each cable shall be identified as specified in Part 3, Execution, of this Specification.

1.06 CABLE PULLING CALCULATIONS

A. The Contractor shall submit cable pulling calculations. These calculations, to be performed by a currently registered professional engineer in the State of Florida, shall define pulling tension and sidewall loading (sidewall bearing pressure values) for all installations of 600VAC, #1/0 conductors and larger greater than 200 feet in length. Calculations for straight horizontal installations of 600VAC, #1/0 conductors and larger greater than 200 feet are not required.

PART 2 - PRODUCTS

2.01 MANUFACTURERS

A. The wire and cable covered by this Specification is intended to be standard equipment of proven performance. Wire and cable shall be designed, constructed and installed in accordance with the best practices of the trade, and shall operate satisfactorily when installed as specified herein and indicated on the Drawings. Only one (1) manufacturer for each wire and cable type shall be permitted.

B. The wire and cable manufacturer shall be ISO 9000 registered.

2.02 600 VOLT POWER WIRE AND CABLE

A. 600 volt cable and wire shall consist of stranded, copper conductor with insulation rated THHN, 90°C for dry locations and THWN, 75°C for wet locations.

B. Conductors shall be stranded copper per ASTM-B8 and B-33, and Class B or C stranding contingent on the size unless otherwise specified. Minimum size wire shall be No. 12 AWG.

C. 600 volt individual power wire and cable shall be Okoseal-N as manufactured by the Okonite Company, Cerro Wire and Cable equivalent, Southwire Company equivalent with SIMPull jacket, or equal. Multi-conductor power cables shall be Okoseal-N Type TC Cable as manufactured by the Okonite Company, Cerro Wire and Cable equivalent, Southwire Company equivalent, or equal.

D. For a motor controlled by a Variable Frequency Drives (VFD) provide VFD power cables. The cable shall be shielded, flexible motor supplied cable for variable speed drives, subject to non-linear power distortion. The VFD cable shall be used to interconnect the AC VFD to the AC motor. The VFD cable shall be 1000V rated UL flexible motor supply cable, with 3 stranded tinned copper conductors with XLPE insulation, 1 stranded tinned copper ground wire with PVC insulation, overall combination tinned copper braid shield

and foil shield, and black PVC jacket. The cable shall be Belden VFD cable, or approved equal.

2.03 600 VOLT CONTROL CABLE

A. 600 volt control cable shall consist of stranded, copper conductor with insulation rated THHN, 90°C for dry locations and XHHW, 75°C for below grade and wet locations. The individual conductors of the multiple conductor cable shall be color coded for proper identification. Color coding shall be equal to ICEA S-68-514, Method 1, E2. Cables shall meet requirements of IEEE-383.

B. Conductors shall be stranded copper per ASTM B-8 and B-33, and Class B or C stranding contingent on the size unless otherwise specified. Minimum wire size shall be No. 14 AWG.

C. 600 volt individual conductor control wire shall be Okoseal-N as manufactured by the Okonite Company, Cerro Wire and Cable equivalent, Southwire Company equivalent with SIMPull jacket, or equal. Multi-conductor control cable shall be Okoseal-N Type TC Cable as manufactured by the Okonite Company, Cerro Wire and Cable equivalent, Southwire Company equivalent, or equal.

2.04 LIGHTING AND RECEPTACLE WIRE AND CABLE

A. The lighting and receptacle branch circuit wire shall consist of solid, copper conductors with insulation rated THHN, 90°C for dry locations and THWN, 75°C for wet locations.

B. Conductors shall be solid copper per ASTM- B-33. Minimum size wire shall be No. 12 AWG.

C. Lighting and receptacle cables and wire shall be Okoseal-N as manufactured by the Okonite Company, Cerro Wire and Cable equivalent, Southwire Company equivalent with SIMPull jacket, or equal.

2.05 INSTRUMENTATION CABLE

A. Single Twisted Pair Instrument Cable

1. The cable shall be single, shielded, twisted pairs or triads with 600 volt insulation and shall have a 90°C insulation rating.

2. Conductors shall be tin or alloy coated (if available), soft, annealed copper, stranded per ASTM-B8, Class B stranding unless otherwise specified. Minimum size wire shall be No. 16 AWG.

3. Conductors shall be with foil and braided shield.

B. Multi-conductor Twisted Pair Instrument Cable

1. The cable shall be insulated stranded conductors, twisted pairs or triads with foil shield over each pair, a common overall foil and braided shield, 600 volt insulation, and 90°C insulation rating.

2. Conductors shall be tin or alloy coated (if available), soft, annealed copper, stranded per ASTM-B8, Class B stranding unless otherwise specified. Minimum size wire shall be No. 20 AWG.

C. The instrumentation cable for analog signals shall be Okoseal-N Type P-OS for single pair or triad applications and Okoseal-N Type SP-OS for multiple pair or triad applications as manufactured by the Okonite Company, Cerro Wire and Cable equivalent, Southwire Company equivalent, or equal.

2.06 CABLE PULLING LUBRICANTS

A. Cable pulling lubricants shall be non-hardening type and approved for use on the type of cable installed. Lubricant shall be Yellow #77 by Ideal, Cable Gel by Greenlee, Poly-Gel by Gardner Bender, or equal.

PART 3 - EXECUTION

3.01 600V CABLE INSTALLATION

A. The cable and wires shall be installed as specified herein and indicated on the Drawings.

B. The cables shall be terminated in accordance with the cable and/or termination product manufacturer's instructions for the particular type of cable.

C. To minimize oxidation and corrosion, wire and cable shall be terminated using an oxide-inhibiting joint compound recommended for "copper-to-copper" connections. The compound shall be Penetrox E as manufactured by Burndy Electrical, or equal.

D. Splices shall not be allowed in the underground manhole and handhole systems. If splices are required, the Contractor shall obtain approval in writing from the Engineer prior to splicing. Splicing materials shall be barrel type butt splice connectors and heat shrink tubing as manufactured by 3M, Ideal, or equal. No splicing of instrumentation cable is allowed. The use of screw-on wire connectors (wire nuts) shall only be permitted for lighting and receptacle circuits. Reference Section 16130 - Boxes for additional requirements regarding control wiring.

E. Wire and Cable Sizes

1. The sizes of wire and cable shall be as indicated on the Drawings, or if not shown, as approved by the Engineer. If required due to field routing, the size of conductors and respective conduit shall be increased so that the voltage drop measured at the load does not exceed 2-1/2%.

2. Minimum wire size within control panels, motor control centers, switchboards and similar equipment shall be No. 12 AWG for power and No. 14 AWG for control.

F. Number of Wires

1. The number of wires indicated on the Drawings for the various control, indication, and metering circuits were determined for general schemes of control and for particular indication and metering systems.

2. The actual number of wires installed for each circuit shall, in no case, be less than the number required; however, the Contractor shall add as many wires as may be required for control and indication of the actual equipment selected for installation at no additional cost to Owner. The addition of conductors shall be coordinated with and approved by the Engineer to avoid violations of the NEC regarding conduit fill.

3. All spare conductors shall be terminated on the terminal blocks mounted within the equipment.

G. Wiring Identification

1. In addition to color coding, all wiring shall be identified at each point of termination. This includes but is not limited to identification at the source, load, and in any intermediate junction boxes where a termination is made. The Contractor shall meet with Owner and Engineer to come to an agreement regarding a wire identification system prior to installation of any wiring. Wire numbers shall not be duplicated.

2. Wire identification shall be by means of a heat shrinkable sleeve. Sleeves shall have a white background with black text. Wire sizes #14 AWG through #10 AWG shall have a minimum text size of 7 points. Wire sizes #8 AWG and larger shall have a minimum text size of 10 points. Sleeves shall be of appropriate length to fit the required text. The use of handwritten text for wire identification shall not be permitted.

3. Sleeves shall be suitable for the size of wire on which they are installed. When installation is complete, sleeves shall be tightly affixed to the wire and shall not move. Sleeves shall be heat shrunk onto wiring with a heat gun approved for the application. Sleeves shall not be heated by any means which employs the use of an open flame. The Contractor shall take special care to ensure that the wiring insulation is not damaged during the heating process.

4. Sleeves shall be installed prior to the completion of the wiring terminations and shall be oriented so that they can be easily read.

5. Sleeves shall be white polyolefin as manufactured by Brady, Seton equivalent, Panduit equivalent, or equal.

6. Where sleeves are not available in the size required for the wire, the Contractor shall use an adhesive label with a white background and black text. Text size shall be in accordance with the requirements listed above.

7. Adhesive labels, for the case when sleeves are not suitable for the wire size, shall be white permanent vinyl as manufactured by Brady, Seton equivalent, Panduit equivalent, or equal.

8. Wire identification in manholes, handholes, pull boxes, and other accessible components in the raceway system where the wiring is continuous shall be accomplished by means of a tag installed around the bundled group of conductors.

Identification shall utilize a FROM-TO system. Each group of conductors shall consist of all of the individual conductors in a single conduit or duct. The tag shall have text that identifies the bundle in accordance with the 'FROM' and 'TO' column for that particular conduit number in the conduit and wire schedule. Minimum text size shall be 10 point. The tag shall be affixed to the wire bundle by the use of nylon wire ties, and shall be made of polyethylene as manufactured by Brady, Seton equivalent, Panduit equivalent, or equal.

H. Cable Installation

1. All interior cable not protected by a compartment enclosure shall be installed in conduit.

I. Wiring Supplies

1. Only electrical wiring supplies manufactured under high standards of production and meeting the approval of the Engineer shall be used.

2. Rubber insulating tape shall be in accordance with ASTM Des. D119. Friction tape shall be in accordance with ASTM Des. D69.

J. Training of Cable

1. The Contractor shall furnish all labor and material required to train cables around cable vaults within buildings and in manholes and handholes in the outdoor underground duct system. Sufficient length of cable shall be provided in each handhole, manhole, and vault so that the cable can be trained and racked in an approved manner. Instrumentation cable shall be racked separate from all other AC and DC wiring to maintain the required separation specified herein. In training or racking, the radius of bend of any cable shall be not less than the manufacturer's recommendation. The training shall be done in such a manner as to minimize chaffing.

K. Connections at Control Panels, Limit Switches, and Similar Devices

1. Where stranded wires are terminated at panels, and/or devices, connections shall be made by solderless lug, crimp type ferrule, or solder dipped.

2. Where enclosure sizes and sizes of terminals at limit switches, solenoid valves, float switches, pressure switches, temperature switches, and other devices make 7-strand, No. 12 AWG, wire terminations impractical, the Contractor shall terminate external circuits in an adjacent junction box of proper size complete with terminal strips and shall install No. 14 AWG stranded wires from the device to the junction box in a conduit. The #12 AWG field wiring shall also be terminated in the same junction box to complete the circuit.

L. Pulling Temperature

1. Cable shall not be flexed or pulled when the temperature of the jacket is such that damage will occur due to low temperature embrittlement. When cable will be pulled with an ambient temperature of 40°F or less within a three (3) day period prior to

pulling the cable reels shall be stored three (3) days prior to pulling in a protected storage area with an ambient temperature of 55°F or more. Cable pulling shall be completed during the work day for which the cable is removed from the protected storage. Any remaining cable reels shall be returned to storage at the completion of the workday.

M. Color Coding

1. Conductor insulation shall be color coded as follows:

a. 480/277V AC Power

Phase A - BROWN
Phase B - ORANGE
Phase C - YELLOW
Neutral WHITE

b. 120/208V or 120/240V AC Power

Phase A - BLACK
Phase B - RED
Phase C ORANGE
Neutral - WHITE

c. DC Power

Positive Lead - RED
Negative Lead - BLACK

d. DC Control

All wiring - BLUE

e. 120VAC Control

Single conductor 120 VAC control wire shall be RED except for a wire entering a motor control center compartment or control panel which is an interlock. This conductor shall be color coded YELLOW.

f. 24VAC Control

All wiring – ORANGE

g. Equipment Grounding Conductor

All wiring - GREEN

2. Conductors No. 2 AWG and smaller shall be factory color coded with a separate color for each phase and neutral, which shall be used consistently throughout the

system. Larger cables shall be coded by the use of colored tape in accordance with the requirements listed above.

3. Low voltage feeder and branch circuit conductors shall be identified in accordance with the NEC. The method utilized for conductor identification for each nominal voltage system shall be permanently posted at each feeder or branch circuit distribution equipment assembly. Reference Articles 200, 210, and 215 of the NEC.

3.02 INSTRUMENTATION CABLE INSTALLATION

A. The Contractor shall install all cable or conductors used for instrumentation wiring (4-20 mA DC, etc.) in rigid galvanized steel or PVC coated rigid galvanized steel conduit. The use of asbestos cement or PVC conduit shall not be permitted. Analog signal wires shall exclusively occupy these conduits. No other wiring for AC or discrete DC circuits shall be installed in these conduits.

B. All shielding shall be continuous and shall be grounded at one point only, or in accordance with the instrumentation equipment manufacturer's recommendations.

C. Where instrumentation cables are installed in panels, manholes, handholes, and other locations, the Contractor shall arrange wiring to provide maximum clearance between these cables and other conductors. Instrumentation cables shall not be installed in same bundle with conductors of other circuits.

D. Additional pullboxes shall be furnished and installed for ease of cable pulling and the cable manufacturer's recommended conduit fill factor shall be followed. Where required or specifically directed by the Engineer, the Contractor shall moisture seal the cables at all connections with OZ Gedney Type "CSB", or equal, sealing bushings.

E. Special instrument cable shall be as specified or recommended by the manufacturer of the equipment or instruments requiring such wiring. Installation, storage, terminations, etc., shall be per manufacturer's recommendations.

F. All cable insulation and jackets shall have adequate strength for it to be pulled through the conduit systems. All conductors shall be color coded and all wires shall be suitably tagged with permanent markers as specified herein.

[END OF SECTION]

SECTION 16130

BOXES

PART 1 - GENERAL

1.01 THE REQUIREMENT

A. The scope of work under this Section includes furnishing and installing all pull boxes, junction boxes, and outlet boxes.

B. Requirements for other boxes and enclosures are not included in this Section. Reference each specific Division 16 equipment Section for requirements related to that equipment's respective enclosure.

C. Reference Section 16000 - Basic Electrical Requirements, and Section 161111 - Conduit.

1.02 CODES AND STANDARDS

A. Boxes shall be designed, manufactured, and/or listed to the following standards as applicable:

1. UL 514A - Metallic Outlet Boxes

2. UL 514C - Standard for Non-metallic Outlet Boxes, Flush Device Boxes, and Covers

3. UL 50 – Enclosures for Electrical Equipment, Non-environmental Considerations

4. UL 50E - Enclosures for Electrical Equipment, Environmental Considerations

5. UL 1203 - Standard for Explosion-proof and Dust-ignition-proof Electrical Equipment for use in Hazardous (Classified) Locations.

6. NEMA 250 – Enclosures for Electrical Equipment

1.03 SUBMITTALS

A. In accordance with the procedures and requirements set forth in the General Conditions, the Contractor shall obtain from the equipment manufacturer(s) and submit the following:

1. Shop Drawings

B. Each submittal shall be identified by the applicable specification section.

1.04 SHOP DRAWINGS

A. Each submittal shall be complete in all respects, incorporating all information and data listed herein and all additional information required for evaluation of the proposed equipment's compliance with the Contract Documents.

B. Partial, incomplete or illegible Submittals will be returned to the Contractor without review for resubmittal.

C. Shop drawings shall include but not be limited to:

1. Product data sheets for boxes, terminal strips, and all accessories

1.05 OPERATION AND MAINTENANCE MANUALS

A. The Contractor shall submit operation and maintenance manuals in accordance with the procedures and requirements set forth in the General Conditions and Division 01.

B. As-built drawings showing dimensions, internal box layout, terminal strip information, and terminal strip identification information shall be provided for all junction boxes. As-built drawings are not required for pull boxes or outlet boxes.

1.06 IDENTIFICATION

A. Each pull and junction box shall be identified with the box name as indicated on the Contract Drawings (e.g. PPB-XXX, CJB-YYY) or as directed by the Engineer. A nameplate shall be securely affixed in a conspicuous place on each box. Nameplates shall be as specified in Section 16195 - Electrical Identification.

PART 2 - PRODUCTS

2.01 MANUFACTURERS

A. The equipment covered by this Specification is intended to be standard equipment of proven performance as manufactured by reputable concerns. Equipment shall be designed, constructed, and installed in accordance with the best practices of the trade, and shall operate satisfactorily when installed as shown on the Drawings.

2.02 PULL AND JUNCTION BOXES

A. General

1. All pull and junction boxes shall be UL listed and labeled.

2. Pull and junction boxes shall not be provided with eccentric or concentric knockouts.

3. Pull and junction boxes mounted embedded in concrete shall be UL listed for embedment.

4. Where metallic boxes are used they shall be of cast type or all welded construction as specified herein. Tack welded boxes are not acceptable.

B. Pull Boxes

1. All pull boxes shall be provided with a matching gasketed cover. For covers with dimensions of 24 inches by 24 inches or less, the cover shall be held in place by

machine screws. Other screw types are not acceptable. For covers with dimensions greater than 24 inches by 24 inches, the cover shall be hinged and held in place by screw-operated clamp mechanisms. Hinge pins shall be removable. Clamp mechanism material of construction shall match that of the associated box.

2. Pull boxes shall not have any wire terminations inside, other than those for grounding/bonding. A ground bar shall be provided with the necessary number of screw type terminals. Twenty (20) percent of the total amount of terminals otherwise required for the pull box (minimum of two) shall be provided as spare terminations. Boxes requiring any other wire terminations shall be furnished and installed in accordance with the requirements for junction boxes herein.

3. Pull boxes shall be 6 inches wide by 6 inches tall by 4 inches deep, minimum. For applications requiring larger boxes, the box shall be sized in accordance with the fill requirements and dimensional requirements of the NEC.

4. Barriers shall be provided in pull boxes to isolate conductors of different voltages, types, and functions. Barrier material of construction shall match that of the box. Isolation shall be provided between the following groups:

    a. Power wiring

    b. AC control wiring

    c. DC control wiring

    d. Instrumentation wiring

C. Junction Boxes

1. Junction boxes used for lighting and receptacle circuits only shall be provided with a matching gasketed cover held in place by machine screws. Other screw types are not acceptable.

2. Junction boxes for all uses other than lighting and receptacle circuits shall be provided with a hinged, gasketed cover. Hinge pins shall be removable. Cover shall be held in place by screw-operated clamp mechanisms. Clamp mechanism material of construction shall match that of the associated box.

3. Barriers shall be provided in junction boxes to isolate conductors and terminal blocks of different voltages, types, and functions. Barrier material of construction shall match that of the box. Isolation shall be provided between the following groups:

    a. Power wiring

    b. AC control wiring

    c. DC control wiring

    d. Instrumentation wiring

4. Junction boxes used for lighting and receptacle circuits only shall be allowed to have screw-on (wire nut) type connectors for wire terminations/junctions.

5. Junction boxes for all uses other than lighting and receptacle circuits shall be provided with terminal strips, consisting the necessary number of screw type terminals. Current carrying parts of the terminal blocks shall be of ample capacity to carry the full load current of the circuits connected, with a 10A minimum capacity. Terminal strips shall be rated for the voltage of the circuits connected. A separate ground bar shall be provided with the necessary number of screw type terminals. Twenty (20) percent of the total amount of terminals otherwise required for the junction box (minimum of two) shall be provided as spare terminations. When barriers are provided within the box, separate terminal strips shall be provided in each barrier area. Terminals shall be lettered and/or numbered to conform to the wiring labeling scheme in place on the project.

6. Junction boxes shall be 6 inches wide by 6 inches tall by 4 inches deep, minimum. For applications requiring larger boxes, the box shall be sized in accordance with the fill requirements and dimensional requirements of the NEC. Terminal blocks (including spare terminals) shall be considered when sizing the junction box.

D. Enclosure Types and Materials

1. In non-hazardous locations, pull and junction boxes shall be furnished with the following enclosure type and material of construction, dependent upon the designation of the area in which they are to be installed. Area designations are indicated on the Drawings.

AREA DESIGNATION	**ENCLOSURE TYPE AND MATERIAL**
Indoor Wet Process Area	NEMA 4X, Aluminum Construction
Indoor Dry Process Area	NEMA 12, Galvanized Steel
Indoor Dry Non-process Area	NEMA 1, Galvanized Steel
Indoor Type 1 Chemical Storage/Transfer Area	NEMA 4X, Fiberglass or PVC
Indoor Type 2 Chemical Storage/Transfer Area	NEMA 4X, Type 316 Stainless Steel
All Outdoor Areas	NEMA 4X, UV-resistant, Sch.80 PVC

2. In hazardous locations, pull and junction boxes shall be furnished with the following enclosure type and material of construction, dependent upon the classification of the area in which they are to be installed. Area classifications are indicated on the Drawings.

AREA CLASSIFICATION	**ENCLOSURE TYPE AND MATERIAL**
Class 1, Division 1, Group D	NEMA 7, Die Cast Aluminum
Class 1, Division 2, Group D	NEMA 4X, Cast Aluminum
Class 2, Division 1, Group F	NEMA 9, Die Cast Aluminum
Class 2, Division 2, Group F	NEMA 4X, Cast Aluminum

3. Non-metallic enclosures, NEMA 7 enclosures, and NEMA 9 enclosures shall be provided with threaded integral conduit hubs.

2.03 OUTLET BOXES

A. General

1. Outlet boxes shall be provided with a trim appropriate for the wiring device installed inside. Reference Section 16141, Wiring Devices, for outlet box trim requirements. An appropriate outlet box trim is required to achieve the NEMA rating of the outlet boxes as specified herein.

B. Surface Mount Outlet Boxes

1. Outlet boxes shall be the deep type, no less than 2.5 inches deep.

2. Outlet boxes shall be provided in single or multi-gang configuration as required, sized in accordance with the requirements of the NEC.

3. In non-hazardous locations, outlet boxes shall be furnished with the following enclosure type and material of construction, dependent upon the designation of the area in which they are to be installed. Area designations are indicated on the Drawings.

AREA DESIGNATION	ENCLOSURE TYPE AND MATERIAL
Indoor Wet Process Area	NEMA 4X, Cast Aluminum
Indoor Dry Process Area	NEMA 1, Cast Aluminum
Indoor Dry Non-process Area	NEMA 1, Cast Aluminum
Indoor Type 1 Chemical Storage/Transfer Area	NEMA 4X, PVC
Indoor Type 2 Chemical Storage/Transfer Area	NEMA 4X, Cast Aluminum
All Outdoor Areas	NEMA 4X, Cast Aluminum

4. In hazardous locations, outlet boxes shall be furnished with the following enclosure type and material of construction, dependent upon the classification of the area in which they are to be installed. Area classifications are indicated on the Drawings.

AREA CLASSIFICATION	ENCLOSURE TYPE AND MATERIAL
Class 1, Division 1, Group D	NEMA 7, Die Cast Aluminum
Class 1, Division 2, Group D	NEMA 4X, Cast Aluminum
Class 2, Division 1, Group F	NEMA 9, Die Cast Aluminum
Class 2, Division 2, Group F	NEMA 4X, Cast Aluminum

5. Outlet boxes shall be provided with integral threaded conduit hubs mounted external to the box. Boxes with threaded conduit hubs mounted internal to the box or as a part of the box wall are not acceptable.

C. Flush Mount Outlet Boxes

1. Outlet boxes shall be no less than 2-1/8 inches deep, and 4-11/16 inches square. Boxes shall be UL listed and labeled. Pre-punched single diameter conduit knockouts are acceptable, however, concentric and eccentric knockouts are not acceptable.

2. Outlet boxes mounted flush in CMU walls shall be made of galvanized, tack welded steel, and suitable for installation in masonry walls. Sectional type boxes are not acceptable for this application.

3. Outlet boxes mounted flush in gypsum walls shall be made of galvanized pressed steel. Tack welded boxes are not acceptable for this application. Sectional type boxes are not acceptable for this application.

4. Outlet boxes mounted cast into concrete shall be concrete tight, and shall be made of galvanized steel or PVC.

PART 3 - EXECUTION

3.01 INSTALLATION

A. Pull and Junction Boxes

1. Pull boxes and junction boxes shall be solidly attached to structural members prior to installation of conduit and set true and plumb. Boxes shall not be supported by their associated conduits.

2. Wooden plugs are not permitted for securing boxes to concrete. Appropriately rated anchors specifically suited for use in concrete shall be used.

3. Box penetrations for conduits shall be made with a punch tool, and penetrations shall be of the size required for the conduit entry and/or hub. Oversized penetrations in boxes are not acceptable.

4. Watertight conduit hubs shall be provided for boxes where a NEMA 4X enclosure rating is specified. Reference Section 16111 - Conduit, for conduit hub requirements.

5. Pull and junction boxes may be installed flush mounted in gypsum, concrete or CMU walls where appropriate provided that covers are easily removed or opened.

6. Pull and junction boxes shall be provided in the enclosure type and material of construction required for the area in which it is installed. Reference the requirements in Part 2 herein, and the area designations indicated on the Drawings.

B. Outlet Boxes

1. Outlet boxes shall be solidly attached to structural members prior to installation of conduit and set true and plumb. Boxes shall not be supported by their associated conduits.

2. Wooden plugs are not permitted for securing boxes to concrete. Appropriately rated anchors specifically suited for use in concrete shall be used.

3. Flush mounted outlet boxes shall be arranged and located so that tile and grout lines fit closely around the boxes, and so placed that the cover or device plate shall fit flush to the finished wall surface.

4. Outlet boxes shall be flush mounted in finished areas and other areas where practical. Flush mounted outlet boxes shall not be installed in hazardous areas and type 1 or 2 chemical storage/transfer areas.

5. For the below-named items, mounting heights from finished floor, or finished grade to top is applicable, depending on the type of wiring device to be installed in the outlet box. Mounting heights for outlet boxes shall be as follows, unless otherwise specified herein, indicated on the Drawings, or required by the Americans with Disability Act (ADA):

    a. Light switches and wall mounted occupancy sensors, 48 inches

    b. Receptacles in indoor dry process/non-process areas, 16 inches

    c. Receptacles in indoor wet process areas and all indoor chemical storage/ transfer areas, 48 inches

    d. Receptacles in outdoor locations, 24 inches

6. Outlet boxes shall be provided in the material of construction required for the area in which it is installed. Reference the requirements in Part 2 herein, and the area designations indicated on the Drawings.

[END OF SECTION]

SECTION 16141

WIRING DEVICES

PART 1 - GENERAL

1.01 THE REQUIREMENT

A. The Contractor shall furnish and install all switches and receptacles for lighting and miscellaneous power applications of the type and at the locations as specified herein and as shown on the Drawings.

B. All switches and receptacles shall be furnished and installed in outlet boxes as specified in Section 16130 - Boxes.

C. Reference Section 16000 - Basic Electrical Requirements.

1.02 SUBMITTALS

A. In accordance with the procedures and requirements set forth in the General Conditions, the Contractor shall obtain from the equipment manufacturer and submit shop drawings. Each submittal shall be identified by the applicable specification section.

1.03 SHOP DRAWINGS

A. Each submittal shall be complete in all respects, incorporating all information and data listed herein and all additional information required for evaluation of the proposed equipment's compliance with the Contract Documents.

B. Partial, incomplete, or illegible submittals will be returned to the Contractor without review for resubmittal.

C. Shop drawings shall include, but not be limited to:

1. Product data sheets.

1.04 SUPPLIES AND SPARE PARTS

A. The Contractor shall furnish 10% (minimum of 1) spare of each receptacle, switch, and plug furnished and installed for this project.

B. Spare parts lists, included with the shop drawing submittal, shall indicate specific sizes, quantities, and part numbers of the items to be furnished. Terms such as "1 lot of packing material" are not acceptable.

C. Parts shall be completely identified with a numerical system to facilitate parts inventory control and stocking. Each part shall be properly identified by a separate number. Those parts which are identical for more than one size shall have the same parts number.

1.05 IDENTIFICATION

A. Each switch and receptacle shall be identified with the equipment item number, manufacturer's name or trademark, and such other information as the manufacturer may consider necessary, or as specified, for complete identification.

PART 2 - PRODUCTS

2.01 MANUFACTURERS

A. The equipment covered by these Specifications is intended to be standard equipment of proven performance as manufactured by reputable concerns. Equipment shall be designed, constructed and installed in accordance with the best practices of the trade, and shall operate satisfactorily when installed as shown on the Drawings.

B. The Contractor shall use the products of a single manufacturer for each type of wiring device.

C. The Contractor shall use the products of a single manufacturer for all device plates. Plate variations are allowed for the following devices:

1. Where the selected plate manufacturer does not manufacture a suitable finish plate.

2. For heavy-duty receptacles rated at more than 30A.

3. Where non-standard plates are required, specified, or shown.

D. The Contractor shall furnish and install all wiring devices and device plates. Wiring devices as listed herein are intended to indicate type, function, and quality of the products.

E. The receptacles, switches, device plates, and other appurtenances shall comply with the requirements of these Specifications. Receptacles installed in toilet, locker, and bathrooms shall be of ground fault interrupter type to meet the minimum NEC requirements. Ground fault circuit interrupter receptacles shall also be furnished and installed as specified herein, indicated on the Drawings, and required by the NEC.

F. Wiring devices shall be approved for use with stranded conductors, if stranded conductors are to be used with the device. Reference Section 16123 - Wire and Cable.

G. The Contractor shall provide specification grade devices which shall be as manufactured by Appleton, Crouse-Hinds, Leviton, Harvey Hubbell Co., Bryant Electric Company, Pass & Seymour, or equal.

2.02 WIRING DEVICES

A. Wiring devices shall be in accordance with the following for nonhazardous areas:

1. Wall Switches, Single Pole, 20 A, 120-277V equivalent to Hubbell No. 1221, Pass & Seymour No. 20AC1, Leviton equivalent, or equal. Switches rated 30 A, 120-277V shall be Leviton 3031, Hubbell equivalent, Pass & Seymour equivalent, or equal.

2. Wall Switches, Double Pole, 20 A, 120-277V equivalent to Hubbell No. 1222, Pass & Seymour No. 20AC2, Leviton equivalent, or equal. Switches rated 30 A, 120-277V shall be Leviton 3032, Hubbell equivalent, Pass & Seymour equivalent, or equal.

3. Wall Switches, Three-Way, 20 A, 120-277V equivalent to Hubbell No. 1223, Pass & Seymour No. 20AC3, Leviton equivalent, or equal. Switches rated 30 A, 120-277V shall be Leviton 3033, Hubbell equivalent, Pass & Seymour equivalent, or equal.

4. Wall Switches, Four-Way, 20 A, 120-277V equivalent to Hubbell No. 1224, Pass & Seymour No. 20AC4, Leviton equivalent, or equal.

5. Convenience Receptacles 20 A, 125V, duplex polarized with grounding connection equivalent to Hubbell No. 5362, Pass & Seymour equivalent, Leviton equivalent, or equal.

6. Hubbell Cat. No. GF-5362, Pass & Seymour equivalent, Leviton equivalent, or equal, for 20A, 120V, duplex, ground fault circuit interrupting type.

B. Special Purpose Receptacles shall be rated to carry, at least where required the full load amperes and voltage of the unit connected thereto. These receptacles shall be provided with grounding poles and shall be equivalent to the following:

1. Hubbell Cat. No. HBL-5661, Pass & Seymour No. 5871, Leviton equivalent, or equal, for 20A, 250VAC, 1-phase service.

2. Hubbell Cat. No. HBL-9330, Pass & Seymour No.3801, Leviton equivalent, or equal, for 30A, 250VAC, 1-phase service.

3. Hubbell Cat. No. 9430, Pass & Seymour No. 5740, Leviton equivalent, or equal, for 30A, 208/120V, 3-phase service.

4. Hubbell Cat. No. 9450, Pass & Seymour No. 5750, Leviton equivalent, or equal, for 50A, 208/120V, 3-phase service.

5. Hubbell Cat. No. 9460, Pass & Seymour No. 5760, Leviton equivalent, or equal, for 60A, 208/120V, 3-phase service.

6. Hubbell Cat. No. 9330, Pass & Seymour No. 5930, Leviton equivalent, or equal, for 30A, 208V, single-phase service.

7. Hubbell Cat. No. 9315, Pass & Seymour equivalent, Leviton equivalent, or equal, for 30A, 277V, single-phase service.

8. Hubbell Cat. No. 23CM10, Pass & Seymour equivalent, Leviton equivalent, or equal, for 20A, single, 125V, polarized with grounding connection, twist lock type. Matching plug shall be Hubbell Cat. No. 23CM11, Pass & Seymour equivalent, Leviton equivalent, or equal.

9. Crouse-Hinds "Arktite" Series, Appleton equivalent, Killark equivalent, or equal, 30A, 3P, 600 Volt, twist lock, weatherproof, power receptacle and box with matching plug.

C. For hazardous areas the following shall be provided:

1. Wall Switches, single pole, 20 A, 120 V equivalent to Crouse Hinds Cat. No. EFD3591 or EFDC3591 (as required); Appleton No. EDS175F1 or EDSC175F1, Killark equivalent, or equal.

2. Convenience Receptacles 20 A, 120-250 VAC, 2 wire, 3 pole equivalent to Crouse Hinds Cat. No. CPS152-201, Appleton No. CPE1-2375, Killark equivalent, or equal.

D. Plugs for hazardous and non-hazardous receptacles shall be provided:

1. Plugs and respective cable shall be provided for equipment furnished under other Divisions (steam cleaners, welders, etc.) as necessary.

2.03 DEVICE PLATES

A. Wall plates with gaskets for flush-mounted receptacles and switches shall be made of Type 304 stainless steel, not less than 0.032 of an inch thick, with beveled edges and milled on the rear so as to lie flat against the wall. Wall plates shall be equivalent to Hubbell Series 9600, Pass & Seymour series 93000, Leviton equivalent, or equal.

B. Device plates for outdoor installations and indoor wet process area installations shall be Appleton Type FSK, Crouse-Hinds #DS185, or equal for wall switches. Device plates for receptacles shall be “in-use” style. “In-use” weatherproof covers shall be rugged, minimum 3 ¼” depth, die-cast aluminum as manufactured by Thomas & Betts "Red Dot," Intermatic International, Inc., or equal.

C. Device plates for indoor dry process areas with surface mounted boxes shall be Crouse-Hinds DS32, or equal for switches, and Crouse-Hinds DS23 or equal for receptacles.

2.04 PLUGS

A. The Contractor shall furnish suitable plugs with equipment furnished under the respective Contract. Plugs shall be black rubber or plastic. For waterproof receptacles, the plugs shall be similar in construction to the receptacles and shall be encased in corrosion resistant yellow housing provided with clamping nuts and stuffing gland cable outlets.

2.05 PROCESS INSTRUMENTS

A. The Contractor shall furnish and install a local disconnect switch at each process instrument (e.g., level transmitter, flow transmitter, analytical instrument etc.,) to disconnect the 120VAC power supply to the instrument. The device shall be a NSSC series manual motor starting switch without overload protection as manufactured by Crouse-Hinds, Appleton equivalent, or equal. For hazardous locations, the device shall be a front operated general use snap switch mounted in an EFS enclosure as manufactured by Crouse-Hinds, Appleton equivalent, or equal.

PART 3 - EXECUTION

3.01 INSTALLATION

A. Switch boxes shall be of unit construction and of sizes as required to adequately house the number of switches required. No sectional type switch boxes shall be permitted.

B. Where more than one (1) switch occurs at one (1) point, gang plates shall be used.

C. All device plates shall be set true and plumb, and shall fit tightly against the finished wall surfaces and outlet boxes.

D. All devices shall be flush-mounted in finished areas, unless otherwise noted. The Contractor shall determine the proper position of every outlet, and relocate any outlet without additional cost to Owner if same is incorrectly or improperly located. The Engineer reserves the right to change the location of any outlet or connecting equipment up to the time of roughing in without additional cost to Owner, provided conduit runs are not increased by more than ten (10) feet.

E. In all areas where thermal or acoustic insulation is applied to the ceiling or walls, outlet boxes shall be set to finish flush with the finished surface of the insulation.

F. When indicated height would place any of the equipment at an unsuitable location such as at a molding or break in wall finish, the contractor shall bring it to the attention of the Engineer for a decision.

G. For the below-named items, mounting heights from finish floor, or finish grade to top is applicable. Mounting heights shall be as follows, unless otherwise specified herein, indicated on the Drawings, or required by the Americans with Disability Act (ADA):

1. Single-pole light switches, 48 inches.

2. Duplex receptacles in dry areas, 16 inches

3. Duplex receptacles in pump rooms, 48 inches

H. The Contractor shall furnish and install switches as indicated on the Drawings. Switches shall be single pole, double pole, 3-way, or 4-way as indicated on the Drawings and as required. Switches located outdoors or in wet indoor locations shall be installed in cast boxes complete with yellow, fiberglass weatherproof covers. Reference Section 16141 - Wiring Devices.

I. All receptacles shall have a self-adhesive label installed on the top at the respective device plate that indicates which panel and which circuit number the receptacle is supplied from. Labels shall have a white background and black lettering in 14 point font.

3.02 CIRCUITING

A. Convenience receptacles shall be grouped on circuits separate from the lighting circuits. A maximum of eight (8) convenience receptacles are permitted per 20A, 120V circuit.

[END OF SECTION]

SECTION 16170

GROUNDING AND BONDING

PART 1 - GENERAL

1.01 THE REQUIREMENT

A. The Contractor shall furnish and install grounding systems complete in accordance with the minimum requirements established by Article 250 of the NEC. Article 250 of the NEC shall be considered a minimum requirement for compliance with this Specification.

B. Grounding of all instrumentation and control systems shall be furnished and installed in accordance with the manufacturer/system requirements and IEEE 1100-92, Powering and Grounding of Sensitive Electronic Equipment. Conflicts shall be promptly brought to the attention of the Engineer.

C. In addition to the NEC requirements, building structural steel columns shall be permanently and effectively grounded:

D. Reference Section 16000 - Basic Electrical Requirements.

1.02 SUBMITTALS

A. In accordance with the procedures and requirements set forth in the General Conditions, the Contractor shall obtain from the equipment manufacturer and submit the following:

1. Shop Drawings

2. Reports of certified field tests.

B. Each submittal shall be identified by the applicable specification section.

1.03 SHOP DRAWINGS

A. Each submittal shall be complete in all respects, incorporating all information and data listed herein and all additional information required for evaluation of the proposed equipment's compliance with the Contract Documents.

B. Partial, incomplete, or illegible submittals will be returned to the Contractor without review for resubmittal.

C. Shop drawings shall include but not be limited to:

1. Product data sheets.

2. Drawings and written description of how the Contractor intends to furnish and install the grounding system.

PART 2 - PRODUCTS

2.01 MANUFACTURERS

A. The equipment covered by these specifications shall be standard equipment of proven performance as manufactured by reputable concerns. Equipment shall be designed, constructed, and installed in accordance with the best practices of the trade, and shall operate satisfactorily when installed as shown on the Drawings.

2.02 GROUND RODS AND GRID

A. Ground rods shall be rolled to a commercially round shape from a welded copper-clad steel manufactured by the molten-welding process or by the electro-formed process (molecularly bonded). They shall have an ultimate tensile strength of 75,000 pounds per square inch (psi) and an elastic limit of 49,000 psi. The rods shall be not less than 3/4 inch in diameter by 10 feet in length; and the proportion of copper shall be uniform throughout the length of the rod. The copper shall have a minimum wall thickness of 0.010 inch at any point on the rod. Ground rods shall be UL 467 listed. The ground rods shall be manufactured by Erico Products, Blackburn, or equal.

B. Except where specifically indicated otherwise, all exposed non current-carrying metallic parts of electrical equipment, metallic raceway systems, grounding conductors in nonmetallic raceways and neutral conductors of wiring systems shall be grounded.

C. The ground connection shall be made at the main service equipment and shall be extended to the ground grid surrounding the structure. The ground grid shall also be connected to the point of entrance of the metallic water service. Connection to the water pipe shall be made by a suitable ground clamp or lug connection to a plugged tee. If flanged pipes are encountered, connection shall be made with the lug bolted to the street side of the flanged connection.

D. Where ground fault protection is employed, care shall be taken so that the connection of the ground and neutral does not interfere with the correct operation of the ground fault protection system.

2.03 FITTINGS

A. Grounding connections to equipment shall be bolted. Cable end connections shall be made by hydraulic crimp or exothermically welded. Split bolt type connectors are not acceptable. Fittings shall be UL 467 listed.

2.04 BARE GROUND CABLE

A. Bare ground cable shall be soft-drawn, bare copper stranded cable complying with ASTM B8. No. 4/0 AWG minimum size unless otherwise shown or indicated on the Drawings.

2.05 EQUIPMENT GROUNDING CONDUCTORS

A. An insulated equipment grounding conductor, which shall be separate from the electrical system neutral conductor, shall be furnished and installed for all circuits. Insulation shall be of the same type as the underground conductors in the raceway and shall be green in color.

Equipment grounding conductors shall be furnished and installed in all conduits. Use of conduits as the NEC required equipment grounding conductor is not acceptable.

2.06 EQUIPMENT GROUNDS

A. Equipment grounds shall be solid and continuous from a connection at earth to all distribution panel boards. Ground connections at panelboards, outlets, equipment, and apparatus shall be made in an approved and permanent manner.

2.07 EXOTHERMIC WELDS

A. All exothermic welding shall be completed per welding kit manufacturer's instructions. Exothermic welds shall be CadWeld by Erico or ThermoWeld.

PART 3 - EXECUTION

3.01 INSTALLATION

A. Metal surfaces where grounding connections are to be made shall be clean and dry. Steel surfaces shall be ground or filed to remove all scale, rust, grease, and dirt. Copper and galvanized steel shall be cleaned with emery cloth to remove oxide before making connections.

B. Ground Grid

1. A main ground grid shall be provided for each structure and interconnecting structure grids consisting of driven ground rods as shown on the Drawings. The ground rods shall be interconnected by the use of copper cable exothermically welded to the rods. The grounding cables shall be installed after the excavations for the building have been completed and prior to the pouring of concrete for the footings, mats, etc. Copper "pigtails" shall be exothermically welded to the ground grid and shall enter the buildings and structure from the outside and shall be connected to steel structures, and equipment as described in this Section and as required to provide a complete grounding system.

2. Grounding conductors shall be continuous between points of connection; splices shall not be permitted.

3. Where conductors are exposed and subject to damage from personnel, traffic, etc., conductors shall be installed in metal raceway. The raceway shall be bonded to the grounding system.

4. Where subsurface conditions do not permit use of driven ground rods to obtain proper ground resistance, rods shall be installed in a trench or plate electrodes shall be provided, as applicable and necessary to obtain proper values of resistance.

5. Buried exothermic welds and ground ring shall not be backfilled until inspected by Engineer.

C. Raceways

1. Conduit which enters equipment such as switchgear, motor control centers, transformers, panelboards, variable frequency drives, instrument and control panels, and similar equipment shall be bonded to the ground bus or ground lug, where provided, and as otherwise required by the NEC.

3.02 TESTING

A. All tests shall be performed in accordance with the requirements of the General Conditions and Division 01. The following tests are required:

1. Witnessed Shop Tests

a. None required.

2. Field Tests

a. Field testing shall be done in accordance with the requirements specified in the General Conditions, Division 01, and NETA acceptance testing specifications referenced in Section 16000 - Basic Electrical Requirements.

b. Fall of potential tests shall be performed on the ground grid per IEEE81 recommendations by a third party, independent testing firm. A fall of potential plot shall be submitted at the conclusion of testing for Engineer review. Documentation indicating the location of the rod and grounding system as well as the resistance and soil conditions at the time the measurements were made shall be submitted. Testing shall show that the ground grid has 5 ohms resistance or less. Due to soil conditions and/or unforeseen field conditions, ground resistances greater than 5 ohms may be acceptable if specifically approved in writing by the Engineer. Ground resistance measurements shall be made in normally dry weather not less than 48 hours after rainfall and with the ground grid under test isolated from other grounds.

c. Continuity tests for the grounding electrode conductor shall also be performed. Test will be accepted when a resistance of less than 1 ohm is shown for this conductor.

[END OF SECTION]

SECTION 16190

SUPPORTING DEVICES

PART 1 - GENERAL

1.01 THE REQUIREMENT

A. The Contractor shall furnish and install structural supports for mounting and installing all conduit, electrical equipment, lighting, alarm systems, instrumentation, and communications equipment furnished under this Contract.

B. Equipment shall be installed strictly in accordance with recommendations of the manufacturer and best practices of the trade resulting in a complete, operable, and safe installation. The Contractor shall obtain written installation manuals from the equipment manufacturer prior to installation.

C. Reference Section 16000 - Basic Electrical Requirements.

1.02 CODES AND STANDARDS

A. Equipment and materials covered under this Section shall be designed, manufactured, and/or listed to the following standards as applicable:

1. ASTM A123 – Standard Specification for Zinc (Hot Dip Galvanized) Coatings on Iron and Steel Products.

2. ASTM A153 – Standard Specification for Zinc Coating (Hot Dip) on Iron and Steel Hardware.

3. ASTM A240 – Standard Specification for Chromium and Chromium-Nickel Stainless Steel Plate, Sheet, and Strip for Pressure Vessels and for General Applications.

4. ASTM A276 – Standard Specification for Steel Bars and Shapes

5. ASTM B783 – Standard Specification for Materials for Ferrous Powder Metallurgy Structural Parts

1.03 SUBMITTALS

A. In accordance with the procedures and requirements set forth in the General Conditions, the Contractor shall obtain from the equipment manufacturer and submit the following:

1. Shop drawings

2. Structural support calculations (if required)

B. Each submittal shall be identified by the applicable Specification section.

1.04 SHOP DRAWINGS

A. Each submittal shall be complete in all respects, incorporating all information and data listed herein and all additional information required for evaluation of the proposed equipment's compliance with the Contract Documents.

B. Partial, incomplete, or illegible submittals will be returned to the Contractor without review for resubmittal.

C. Shop drawings shall include but not be limited to:

1. Product data sheets.

2. Complete assembly, layout, installation, and foundation drawings with clearly marked dimensions.

PART 2 - PRODUCTS

2.01 MANUFACTURERS

A. The equipment covered by this Specification is intended to be standard equipment of proven performance as manufactured by reputable concerns. Equipment shall be designed, constructed, and installed in accordance with the best practices of the trade, and shall operate satisfactorily when installed as shown on the Drawings.

2.02 MATERIALS

A. Support channel shall be 1-5/8” by 1-5/8” minimum, with 12 gage material thickness.

B. Support channel, support channel fittings, and threaded rod shall be furnished with the following material of construction, dependent upon the designation of the area in which they are to be installed. Area designations are indicated on the Drawings.

AREA DESIGNATION	MATERIAL OF CONSTRUCTION
Indoor Wet Process Area	Type 316 Stainless Steel
Indoor Dry Process Area	Aluminum
Indoor Dry Non-process Area	Aluminum
All Outdoor Areas	Type 316 Stainless Steel
All Hazardous Areas	Type 316 Stainless Steel

C. Fastening hardware (bolts, nuts, washers, and screws) shall be furnished with the following material of construction, dependent upon the designation of the area in which they are to be installed. Area designations are indicated on the Drawings.

AREA DESIGNATION	MATERIAL OF CONSTRUCTION
Indoor Wet Process Area	Type 316 Stainless Steel
Indoor Dry Process Area	Type 316 Stainless Steel
Indoor Dry Non-process Area	Type 316 Stainless Steel
All Outdoor Areas	Type 316 Stainless Steel
All Hazardous Areas	Type 316 Stainless Steel

PART 3 - EXECUTION

3.01 INSTALLATION

A. Concrete or Masonry Inserts

1. The Contractor shall be responsible for the furnishing and installation of all anchor bolts, masonry inserts, and similar devices required for installation of equipment furnished under this Contract.

2. If a time delay for the arrival of any special inserts or equipment drawings, etc. occurs, the Contractor may, if permitted by the Engineer, make arrangements for providing approved recesses and openings in the concrete or masonry and, upon subsequent installation, the Contractor shall be responsible for filling in such recesses and openings. Any additional costs that may be incurred by this procedure shall be borne by the Contractor.

3. The Contractor shall furnish leveling channels for all switchgear, switchboards, motor control centers, and similar floor mounted equipment. The leveling channels shall be provided for embedment in the equipment housekeeping pads. Coordination of the installation of these channels with the concrete pad is essential and required. Pad height shall be as required to maintain concrete coverage of the reinforcement bars while not causing associated equipment to exceed the maximum mounting height requirements of the NEC.

B. Support Fastening and Locations

1. All equipment fastenings to columns, steel beams, and trusses shall be by beam clamps or welded. No holes shall be drilled in the steel.

2. Unless otherwise indicated on the Drawings or in the Specifications, handrails/guardrails shall not be utilized as supports for electrical equipment, devices, or appurtenances. Handrails/guardrails shall not be cut, drilled, or otherwise modified in order to accommodate electrical supports without written approval from the Engineer.

3. All holes made in reflected ceilings for support rods, conduits, and other equipment shall be made adjacent to ceiling grid bars where possible, to facilitate removal of ceiling panels.

4. Support channel shall be provided wherever required for the support of starters, switches, panels, and miscellaneous equipment.

5. All equipment, devices, and raceways that are installed on the dry side of a water bearing wall shall not be installed directly onto the wall. Support channel shall be used to allow ventilation air to pass behind the equipment, devices, or raceway.

6. All supports shall be rigidly bolted together and braced to make a substantial supporting framework. Where possible, control equipment shall be grouped together and mounted on a single framework.

7. Aluminum support members shall not be installed in direct contact with concrete. Stainless steel or non-metallic "spacers" shall be used to prevent contact of aluminum with concrete.

8. Actual designs for supporting framework should take the nature of a picture frame of support channels and bracket with a plate for mounting the components. The Contractor is responsible for the design of supporting structure; Contractor shall submit design details to the Engineer for acceptance before proceeding with the fabrication.

9. Wherever dissimilar metals come into contact, the Contractor shall isolate these metals as required with neoprene washers, nine (9) mil polyethylene tape, or gaskets.

10. For all installations where fiberglass supporting materials are required, the Contractor shall submit structural calculations and the details of the proposed system of support. Structural calculations shall be signed and sealed by a registered professional engineer in the state in which the project is located.

11. For the following installations where conduits are provided with a support system suspended from the above or attached to a vertical structure, the Contractor shall submit structural calculations and details of the proposed system of support. Structural calculations shall be signed and sealed by a registered professional engineer in the state in which the project is located.

    a. A quantity of twelve (12) or more conduits trade size 1” and smaller are proposed for a conduit support rack.

    b. A quantity of eight (8) or more conduits trade sizes 1 ½” to 2 1/2” are proposed for a conduit support rack.

    c. A quantity of four (4) or more conduits trade sizes 3” and larger are proposed for a conduit support rack.

12. Single conduits installed exposed along walls and ceilings shall be secured to the wall or ceiling with a one-hole conduit clamp and clamp-back. Where multiple conduits are installed exposed together, support channel and conduit clamps shall be used.

C. Equipment, boxes, and enclosures which are factory-constructed with integral mounting provisions (such as brackets, mounting feet, bolt holes, etc.) shall be installed/supported utilizing those mounting provisions. Equipment, boxes and enclosures shall not be field

modified to enable mounting by any other means. Equipment, boxes, and enclosures that are field-modified by any means which compromises the UL Listing or NEMA rating of the enclosure/assembly shall be removed and replaced by the Contractor at no additional cost to Owner.

[END OF SECTION]

SECTION 16195

ELECTRICAL IDENTIFICATION

PART 1 - GENERAL

1.01 THE REQUIREMENT

A. All electrical equipment shall be properly identified in accordance with these Specifications and the Contract Drawings. All switchgear, switchboards, motor control centers, variable frequency drives, lighting and distribution panelboards, combination starters, control panels, pull and junction boxes, enclosures, disconnect switches, control stations, and similar equipment shall be identified in the manner described, or in an equally approved manner.

B. The types of electrical identification specified in this section include, but are not limited to, the following:

1. Operational instructions and warnings.

2. Danger signs.

3. Equipment/system identification signs.

4. Nameplates.

1.02 SIGNS

A. "DANGER-HIGH-VOLTAGE" signs shall be securely mounted on the entry doors of all electrical rooms.

1.03 LETTERING AND GRAPHICS

A. The Contractor shall coordinate names, abbreviations, and other designations used in the electrical identification work with the corresponding designations shown, specified or scheduled. Provide numbers, lettering, and wording as indicated or, if not otherwise indicated, as recommended by manufacturers or as required for proper identification and operation/maintenance of the electrical systems and equipment.

1.04 SUBMITTALS

A. In accordance with the procedures and requirements set forth in the General Conditions, the Contractor shall obtain from the equipment manufacturer and submit shop drawings. Each submittal shall be identified by the applicable specification section.

1.05 SHOP DRAWINGS

A. Each submittal shall be complete in all respects, incorporating all information and data listed herein and all additional information required for evaluation of the proposed equipment's compliance with the Contract Documents.

B. Partial, incomplete, or illegible submittals will be returned to the Contractor without review for resubmittal.

C. Shop drawings shall include but not be limited to:

1. Product data sheets.

PART 2 - PRODUCTS

2.01 MANUFACTURERS

A. The material covered by these Specifications is intended to be standard material of proven performance as manufactured by reputable concerns. Material shall be fabricated, constructed, and installed in accordance with the best practices of the trade, and shall operate satisfactorily when installed as specified herein and shown on the Drawings.

2.02 NAMEPLATES

A. Nameplates shall be engraved, high pressure plastic laminate, white with black lettering.

B. Nameplates shall be attached to NEMA 4X enclosures utilizing UL-recognized mounting kits designed to maintain the overall UL Type rating of the enclosure. Mounting kit fasteners shall be stainless steel Type AHK10324X as manufactured by Hoffman, or equal.

2.03 HIGH VOLTAGE SIGNS

A. Standard "DANGER" signs shall be of baked enamel finish on 20 gage steel; of standard red, black and white graphics; 14 inches by 10 inches size except where 10 inches by 7 inches is the largest size which can be applied where needed, and except where a larger size is needed for adequate identification.

2.04 CONDUIT IDENTIFICATION

A. Conduit identification shall be as specified in Section 16111 - Conduit.

2.05 WIRE AND CABLE IDENTIFICATION

A. Field installed wire and cable identification shall be as specified in Section 16123 - Wire and Cable.

B. A plastic laminate nameplate shall be provided at each panelboard, motor control center, switchgear assembly, and switchboard assembly. This nameplate shall be used to clearly convey the conductor identification means used at that piece of equipment (i.e., Phase A=Brown, Phase B=Orange, C = Yellow).

C. Wiring identification for factory installed wiring in equipment enclosures shall be as specified in the respective section.

2.06 BOX IDENTIFICATION

A. Pull, junction and device box identification shall be as specified in Section 16130 – Boxes.

PART 3 - EXECUTION

3.01 NAMEPLATES

A. Nameplates shall be attached to the equipment enclosures with (2) two stainless steel sheet metal screws for nameplates up to 2-inches wide. For nameplates over 2-inches wide, four (4) stainless steel sheet metal screws shall be used, one (1) in each corner of the nameplate. The utilization of adhesives is not permitted.

3.02 OPERATIONAL IDENTIFICATION AND WARNINGS

A. Wherever reasonably required to ensure safe and efficient operation and maintenance of the electrical systems and electrically connected mechanical systems and general systems and equipment, including prevention of misuse of electrical facilities by unauthorized personnel, install plastic signs or similar equivalent identification, instruction, or warnings on switches, outlets, and other controls, devices, and covers or electrical enclosures. Where detailed instructions or explanations are needed, provide plasticized tags with clearly written messages adequate for the intended purposes. Signs shall be attached as specified above for nameplates.

3.03 POWER SOURCE IDENTIFICATION

A. After installation of all field equipment (i.e. valves, motors, fans, unit heaters, instruments, etc) install nameplates at each power termination for the field equipment. Nameplate data shall include equipment designation (tag number), power source (MCC number, panelboard, etc), circuit number, conduit number from schedule and voltage/phase.

B. Contractor to coordinate with the Engineer and Owner regarding exact nameplate placement during construction.

C. Nameplates shall be as specified herein.

[END OF SECTION]

SECTION 16440

DISCONNECT SWITCHES

PART 1 - GENERAL

1.01 THE REQUIREMENT

A. The Contractor shall furnish and install separately mounted, individual disconnect switches as specified herein and indicated on the Drawings.

B. Disconnect switches for process instruments are not included in the scope of this Section and shall be as specified in Section 16141 – Wiring Devices.

1.02 CODES AND STANDARDS

A. Disconnect switches shall be designed, manufactured, and/or listed to the following standards as applicable:

1. UL 98 – Enclosed and Dead-Front Switches

2. UL 1203 – Standard for Explosion-proof and Dust-ignition-proof Electrical Equipment for use in Hazardous (Classified) Locations.

3. NEMA 250 – Enclosures for Electrical Equipment

4. NEMA KS 1 – Heavy Duty Enclosed and Dead-Front Switches

1.03 SUBMITTALS

A. In accordance with the procedures and requirements set forth in the General Conditions, the Contractor shall obtain from the equipment manufacturer and submit the following:

1. Shop Drawings

2. Spare Parts List

B. Each submittal shall be identified by the applicable specification section.

1.04 SHOP DRAWINGS

A. Each submittal shall be complete in all respects, incorporating all information and data listed herein and all additional information required for evaluation of the proposed equipment's compliance with the Contract Documents.

B. Partial, incomplete or illegible submittals will be returned to the Contractor without review for resubmittal.

C. Shop drawings shall include but not be limited to:

1. Product data sheets.

2. Complete layout and installation drawings with clearly marked dimensions for each type/size/rating of disconnect switch.

3. Assembled weight of each unit.

D. The shop drawing information shall be complete and organized in such a way that the Engineer can determine if the requirements of these Specifications are being met. Copies of technical bulletins, technical data sheets from "soft-cover" catalogs, and similar information which is "highlighted" or somehow identifies the specific equipment items that the Contractor intends to provide are acceptable and shall be submitted.

1.05 SPARE PARTS

A. The equipment shall be furnished with all spare parts as recommended by the equipment manufacturer.

B. One (1) complete set of spare fuses for each ampere rating installed shall be furnished and delivered to Owner at the time of final inspection.

C. Spare parts lists, included with the shop drawing submittal, shall indicate specific sizes, quantities, and part numbers of the items to be furnished. Terms such as "1 lot of packing material" are not acceptable.

D. Parts shall be completely identified with a numerical system to facilitate parts inventory control and stocking. Each part shall be properly identified by a separate number. Those parts which are identical for more than one size, shall have the same parts number.

1.05 IDENTIFICATION

A. Each equipment item shall be identified with a nameplate. The nameplate shall be engraved indicating the circuit number and equipment name with which it is associated. Equipment identification shall be in accordance with Section 16195 - Electrical Identification.

PART 2 - PRODUCTS

2.01 MANUFACTURERS

A. The equipment covered by this Specification is intended to be standard equipment of proven performance as manufactured by reputable concerns. Equipment shall be designed, constructed and installed in accordance with the best practices of the trade, and shall operate satisfactorily when installed as shown on the Drawings.

B. Switches shall be manufactured by the Square D Company, Eaton, the General Electric Company,Siemens Energy and Automation, Inc or approved equal.

2.02 DISCONNECT SWITCHES

A. Disconnect switches shall be heavy-duty type and/or as specified in these Specifications. Switches shall be furnished and installed as shown on the Drawings and as required by the NEC. Handles shall be lockable.

B. Disconnect switches for non-hazardous areas shall be UL 98 Listed. Disconnect switches for hazardous areas shall be UL 1203 Listed.

C. Switches shall meet NEMA Standard KS 1 type HD requirements, be, single-throw, be externally operated, and be fused or non-fused as indicated on the Drawings. Switches shall have the number of the poles, voltage, and ampere ratings as shown on the Drawings.

D. In non-hazardous locations, disconnect switches shall be furnished with the following enclosure type and material of construction, dependent upon the designation of the area in which they are to be installed. Area designations are indicated on the Drawings.

AREA DESIGNATION	ENCLOSURE TYPE AND MATERIAL
Indoor Wet Process Area	NEMA 4X, Type 316 Stainless Steel
Indoor Dry Process Area	NEMA 12, Painted Steel
Indoor Dry Non-process Area	NEMA 1, Painted Steel
Indoor Type 1 Chemical Storage/Transfer Area	NEMA 4X, Fiberglass
Indoor Type 2 Chemical Storage/Transfer Area	NEMA 4X, Type 316 Stainless Steel
All Outdoor Areas	NEMA 4X, Type 316Stainless Steel

E. In hazardous locations, disconnect switches shall be furnished with the following enclosure type and material of construction, dependent upon the classification of the area in which they are to be installed. Area classifications are indicated on the Drawings.

AREA CLASSIFICATION	ENCLOSURE TYPE AND MATERIAL
Class 1, Division 1, Group D	NEMA 7, Die Cast Aluminum
Class 1, Division 2, Group D	NEMA 7, Die Cast Aluminum
Class 2, Division 1, Group F	NEMA 9, Die Cast Aluminum
Class 2, Division 2, Group F	NEMA 9, Die Cast Aluminum

F. Disconnect switches shall be quick-make, quick-break and with an interlocked cover which cannot be opened when switch is in the "ON" position and capable of being locked in the "OPEN" position.

G. A complete set of fuses for all switches shall be furnished and installed as required. Time-current characteristic curves of fuses serving motors or connected in series with circuit breakers shall be coordinated for proper operation. Fuses shall have voltage rating not less than the circuit voltage.

H. Disconnect switches shall be furnished with a factory installed internal barrier kit that helps prevent accidental contact with live parts and provides “finger-safe” protection when the door of the enclosed switch is open.

I. Disconnect switches shall be furnished with a manufacturer-supplied ground lug kit for termination of equipment grounding conductors. Where a grounded (neutral) conductor is shown on the Drawings in the conduits connected to the disconnect switch, a manufacturer-supplied neutral bar shall be furnished for termination of the grounded conductors. Third party ground lug and neutral lug kits not supplied by the disconnect switch manufacturer are not acceptable.

J. Fused disconnect switches shall be furnished for motor operated valve and gate actuators where shown on the Drawings. The Contractor shall coordinate the supply of these fused switches with the specific requirements of the actuator. Fuses with fast fault clearing times may be required for modulating valve actuators.

K. Disconnect switches for all motors connected to variable frequency drives (VFDs) and other pump starters, where indicated on drawings, shall be furnished with a factory installed electrical interlock kit that includes one (1) early-break auxiliary contact rated for 5A (minimum) at 120 VAC to be used to open the control circuit before the main switch blades break.

PART 3 - EXECUTION

3.01 INSTALLATION

A. All disconnect switches shall be mounted five (5) feet above the floor or finished grade, at the equipment height where appropriate, or where shown otherwise.

B. Disconnect switches shall be provided in the enclosure type and material of construction required for the area in which it is installed. Reference the requirements in Part 2 herein, and the area designations indicated on the Drawings.

3.02 TESTING

A. All tests shall be performed in accordance with the requirements of the General Conditions and Division 01. The following tests are required:

1. Field Tests

a. Field testing shall be done in accordance with the requirements specified in the General Conditions, Division 01, and NETA Acceptance Testing Specifications, latest edition.

[END OF SECTION]

SECTION 16500

LIGHTING

PART 1 - GENERAL

1.01 THE REQUIREMENT

A. The Contractor shall furnish and install all lighting fixtures, labor, and material, in accordance with the preceding Specifications, the requirements of this Section, and as shown on the Drawings.

B. Lighting shall be in accordance with the latest requirements of the Illuminating Engineering Society, and all lighting fixtures shall have the Underwriters Laboratories, Inc. label of approval.

C. All wiring shall be placed in conduit and shall comply with the Specifications for conduit, outlet boxes, pull and junction boxes, wires and cables, grounding, and other Sections as set forth in these Specifications and as noted herein.

D. Reference Section 16000 - Basic Electrical Requirements, and Section 16170 - Grounding and Bonding.

1.02 CODES AND STANDARDS

A. The equipment specified herein shall comply with the following codes and standards, where applicable.

1. Underwriter's Laboratories, Inc. (UL):
    a. UL 924 – Emergency Lighting and Power Equipment
    b. UL 935 – Fluorescent Lamp Ballasts
    c. UL 844 – Luminaires for Use in Hazardous (Classified) Locations
    d. UL 1029 – High Intensity Discharge Lamp Ballasts
    e. UL 1598 – Luminaires
2. American National Standards Institute (ANSI):
    a. ANSI C82.11 – High Frequency Fluorescent Lamp Ballasts
    b. ANSI C62.41 – Guide for Surge Voltages in Low-Voltage AC Power Circuits
3. National Electrical Code (NEC), latest edition.

1.03 SUBMITTALS

A. In accordance with the procedures and requirements set forth in the General Conditions, the Contractor shall obtain from the equipment manufacturer and submit the following:

1. Shop Drawings

2. Operation and Maintenance Manuals

3. Spare Parts Lists

B. Each submittal shall be identified by the applicable specification section.

1.04 SHOP DRAWINGS

A. Each submittal shall be complete in all respects, incorporating all information and data listed herein and all additional information required for evaluation of the proposed equipment's compliance with the Contract Documents.

B. Partial, incomplete or illegible submittals will be returned to the Contractor for resubmittal without review.

C. Shop drawings shall include but not be limited to:

1. Product data sheets.

2. Catalog cuts for each fixture type showing performance and construction details of standard fixtures, and complete working drawings showing all proposed construction details of special or modified standard fixtures.

3. Photometric curves.

4. Lamp and LED data including efficiency (Efficacy lumens/watt) information.

5. LED Driver information.

6. Catalog data including applicable coefficients of utilization tables, isolux chart of illumination on a horizontal plane, beam efficiency, horizontal and vertical beam spread, and beam lumens.

7. System (entire fixture assembly) efficiency data.

8. Pole calculations.

D. Shop drawings shall be submitted to the Engineer for review and acceptance for all fixtures before fixtures and poles are manufactured. Substitutions will be permitted only if acceptable to the Engineer.

E. Manufacturer's catalog number and description in the fixture schedule on the Contract Documents establishes a level of quality, style, finish, etc. The use of a catalog number describing the various types of fixtures shall be used as a guide only, and does not exclude all the required accessories or hardware that may be required for a complete installation.

1.05 OPERATION AND MAINTENANCE MANUALS

A. The Contractor shall submit Operation and Maintenance Manuals in accordance with the procedures and requirements set forth in the General Conditions and Division 01.

1.06 SPARE PARTS

A. All spare parts as recommended by the equipment manufacturer shall be furnished to Owner by the Contractor. The following minimum spare parts shall be furnished:

1. One (1) spare bulb.

2. One (1) spare LED driver.

B. The spare parts shall be packed in labeled containers suitable for long term storage, bearing labels clearly designating the contents and the pieces of equipment for which they are intended.

C. Spare parts shall be delivered at the same time as the equipment to which they pertain. The Contractor shall properly store and safeguard such spare parts until completion of the work, at which time they shall be delivered to Owner.

1.07 LIGHTING CONTROLS

A. The lighting systems shall be controlled as specified under control panels in Division 17 interfacing with integral photocells.

PART 2 - PRODUCTS

2.01 MANUFACTURERS

A. The equipment covered by this Specification is intended to be standard equipment of proven performance as manufactured by reputable concerns. Equipment shall be designed, constructed, and installed in accordance with the best practices of the trade, and shall operate satisfactorily when installed as shown on the Drawings.

2.02 FIXTURES

A. Each fixture shall bear the Underwriters Laboratories, Inc. label. All lighting fixtures shall be furnished complete with lamps of the size and type as indicated on the Drawings and all fittings and hardware necessary for a complete installation. Lighting fixtures shall have all parts and fittings necessary to completely and properly install the fixtures.

B. Fixture leads shall be as required by NEC and shall be grounded by the equipment grounding conductor in the conduit.

C. All glassware shall be high quality, homogeneous in texture, uniform in quality, free from defects, of uniform thickness throughout, and properly annealed. Edges shall be well rounded and free from chips or rough edges.

D. Fixtures shall be 115W, Pole-mounted, 120-277 VAC, LED light fixture, color temperature of 4000K, 20LEDs, IESNA roadway Type 4 distribution, gray die cast aluminum housing,

1050mA driver 6250 lumen minimum, full-cutoff optics, integral photocell, wet location listed. Pole shall be round gray, base mounted, tapered, 12ft. anodized aluminum pole. Fixture shall be AEL Autobahn ATB0 Series, GE Evolve LED EASC, or Gardco Radiant RL Series.

2.03 LED DRIVERS

A. Drivers shall have a voltage range of (120-277) +/- 10% at a frequency 60Hz.

B. All drivers shall be designed to a power factor >90% with a total harmonic distortion THD <20% at full load.

C. Case temperature shall be rated for -40°C through +80°C.

D. Drivers shall have overheat protection, self-limited short circuit protection and overload protected.

E. Drivers shall be furnished with a fused primary.

F. Drivers shall have an output current ripple <30%

G. Drivers shall have a five year (100,000 hour) warranty.

H. Drivers shall be manufactured by Advance, Universal or equal.

I. Drivers shall be UL Listed for damp location, UL1012, UL935, ROHS.

J. Drivers shall meet FCC 47 Sub Part 15.

K. All drivers shall be provided with ANSI/IEEE C62.41 Category C (10kV/5kA) surge protection.

2.04 LEDs

A. Luminaires provided with LED technology shall utilize high brightness LEDs with a group binning code of P and/or Q.

B. Color Temperature: as specified in fixture schedule.

C. Junction point shall be designed and manufactured to allow adequate heat dissipation.

D. LEDs shall be rated for 100,000 hours of life, minimum (based on IESNA L70).

2.05 POLES

A. Poles shall be designed to withstand calculated wind force based on wind velocity in accordance with the provisions of the Florida Building Code.

B. Pole mounted fixtures shall be mounted on poles as designated in the fixture schedule or as indicated on the Drawings. Poles shall have adequate handholes and weatherproof receptacles where indicated. All anchor bolts and nuts shall be stainless steel.

C. The Contractor shall furnish and install a concrete foundation for the pole mounted fixtures located in the yard (i.e. site lighting) as indicated on the Drawings and as required, and shall provide anchorage to new and existing structures for pole mounted fixtures located on structures.

D. Foundation shall be designed and approved by a professional structural engineer currently registered in the State of Florida. The wind design shall be in accordance with the Florida Building Code and local requirements. Pole structure/foundation shall be designed for the most critical load combinations as defined by the Building Code.

E. Signed and sealed calculations and drawings of lighting foundations and structural anchorage shall be submitted to the Engineer for the purpose of verifying the design criteria and to verify compatibility of anchorage forces with supporting structures not designed by the Contractor's Engineer.

PART 3 - EXECUTION

3.01 INSTALLATION

A. The Contractor shall protect all fixtures at all times from damage, dirt, dust, and the like. Before final acceptance, all fixtures and devices shall be cleaned of all dust, dirt or other material to the satisfaction of the Engineer.

B. Relamping access of fixtures shall require no special tools. All optical control surfaces such as lenses and reflectors shall be safely and securely attached to fixtures and shall be easily and quickly removed and replaced for cleaning without the use of special tools. No fixture part that may be removed, for maintenance, shall be held in place by metal tabs that must be bent to remove said part.

C. The Contractor shall furnish and install a concrete foundation for the pole mounted fixtures as indicated on the Drawings and as required. Foundation shall be designed and approved by a professional structural engineer currently registered in the State of Florida. The wind design shall be in accordance with ASCE 7 and the Florida Building Code. Pole structure/foundation shall be able to handle fixture/pole weight and withstand design wind velocity and gust factor. Provide calculations signed and sealed by a Professional Structural Engineer for review.

D. One (1), 3/4" diameter, 10'-0" long ground rod, furnish in accordance with Section 16170 – Grounding and Bonding, shall be driven adjacent to each pole. The pole, anchor bolts, steel reinforcement bar in the base, and equipment grounding conductor shall all be bonded to the ground rod as indicated in the standard details. Top of pole shall be fitted with a lightning dissipating aerial.

[END OF SECTION]

SECTION 17000

INSTRUMENTATION AND CONTROL - GENERAL

PART 1 – GENERAL

1.01 SCOPE

A. The Contractor shall provide, through the services of the Instrumentation and Control System Subcontractor, all components, system installation services, as well as all required and specified ancillary services in connection with the Instrumentation, Control and Information System. The System includes all materials, labor, tools, fees, charges and documentation required to furnish, install, test and place in operation a complete and operable instrumentation, control and information system as shown and/or specified. The system shall include all measuring elements, signal converters, transmitters, control panels, cabinets, digital hardware, signal and data transmission systems, interconnecting wiring, brackets, supports, piping, tubing, valves, mounting hardware, and such accessories as shown, specified, and/or required to provide the functions indicated.

B. The Contractor shall take note of any specific construction sequencing restrictions that may impact the performance of the Work. The Contractor shall coordinate sequence requirements between its various Project subcontractors as necessary to meet all requirements as specified in the contract documents.

C. The general scope of work to be performed under this Division includes, but is not limited to, the following:

1. The Contractor shall retain overall responsibility for the instrumentation and control system as specified herein.

2. Furnish and install control equipment, operator interfaces, field panels, and associated cabinets and control panels as shown on the Drawings and specified in this Division.

3. Provide basic software configuration, network equipment configuration, factory testing, and field testing for all control panels furnished by instrumentation and controls subcontractor under this Contract. Basic configuration of the PLCs shall consist of assigning PLC tags to the physical IOs, setting up communications protocol links where required, and assigning IP addresses in accordance the Owner’s standards.

4. Coordinate with Owners operations, Environmental Services, and IT departments.

5. Furnish and install process instrumentation, and associated taps, nipples, valves, tubing, pipe stands, sunshields, and supports as scheduled or shown on the Drawings, unless otherwise noted or supplied by equipment vendors.

6. Perform termination and testing of all Instrumentation and Control System signal wiring and power supply wiring at equipment furnished under this Division.

7. Final termination and testing of all Instrumentation and Control System signal wiring and power supply wiring at equipment furnished under this Division.

8. Furnish and install transient voltage surge suppression systems for all digital equipment, data communications equipment, local control panels, and field instruments provided under this Division, including connections to grounding system(s) provided under Division 16.

9. Coordinate grounding requirements with the electrical subcontractor for all digital equipment, local control panels, and field instrumentation provided under this Division. Terminate grounding system cables at all equipment provided under this Division.

10. Provide system factory acceptance testing, field testing, calibration, operator/maintenance personnel training, and startup services as specified herein and as required to make all systems fully operational.

11. The Contractor shall furnish and install embedded supports, instrument stands, brackets, mounting hardware, piping, tubing, isolation valves and related items required for instrumentation and equipment furnished under Division 17.

D. The Contractor shall coordinate all work specified herein with related work specified in other Divisions, and shall schedule the work to minimize downtime of equipment and controls. The Contractor shall provide temporary equipment and interconnecting cables as described herein and as shown on the Drawings.

E. It is the intent of the Contract Documents to construct a complete and working installation. Items of equipment or materials that may reasonably be assumed as necessary to accomplish this end shall be supplied whether or not they are specifically stated herein.

1.02 RELATED ITEMS

A. Field mounted switches, limit switches, valve and gate operator position transmitters, sump pump controls, and other instrumentation and controls furnished with mechanical or electrical equipment not listed in the instrument schedule shall be furnished, installed, tested, and calibrated as specified under other Divisions and contract drawings.

B. Additional and related work performed under Division 16 includes the following:

1. Conduit and raceways for all instrumentation and control system signal wiring, grounding systems, copper and fiber optic communication cables, and special cables.

2. Instrumentation and control system signal wiring.

3. Installation of (pull in conduit system) copper and fiber optic data communications cables.

4. Grounding systems for all digital equipment, local control panels, and field instrumentation provided under Division 17. Grounding systems shall be complete to the equipment provided under Division 17, ready for termination by the instrumentation and controls subcontractor.

5. Termination of all instrumentation and control system grounding, signal and data communications cables, wiring and surge suppression devices at the equipment end of all equipment furnished under other Divisions of the Specifications. Wiring systems shall be installed complete to the equipment provided under Division 17, ready for termination by the instrumentation and controls subcontractor.

1.03 GENERAL INFORMATION AND DESCRIPTION

A. Where manufacturers are named for a particular item of equipment, it is intended as a guide to acceptable quality and performance and does not exempt such equipment from the requirements of these Specifications or Drawings.

B. In order to centralize responsibility, it is required that all equipment (including field instrumentation and control system hardware) offered under this Division shall be furnished and installed by the instrumentation and controls subcontractor, or under the supervision of the instrumentation and controls subcontractor, who shall assume complete responsibility for proper operation of the instrumentation and control system equipment, including that of coordinating all signals, and furnishing all appurtenant equipment.

C. The Contractor shall retain total responsibility for the proper detailed design, fabrication, inspection, test, delivery, assembly, installation, activation, checkout, adjustment, and operation of the entire instrumentation and control system as well as equipment and controls furnished under other Divisions of the Specifications. The Contractor shall be responsible for the delivery of all detailed drawings, manuals, and other documentation required for the complete coordination, installation, activation, and operation of mechanical equipment, equipment control panels, local control panels, field instrumentation, control systems, and related equipment and/or systems and shall provide for the services of a qualified installation engineer to supervise all activities required to place the completed facility in stable operation under full digital control.

D. The instrumentation and control system shall be capable of simultaneously implementing all real-time control and information system functions, and servicing all operator service requests as specified, without degrading the data handling and processing capability of any system component.

E. The Drawings indicate the approximate locations of field instruments, control panels, systems, and equipment as well as field-mounted equipment provided by others. The instrumentation subcontractor shall examine the Drawings to determine actual size and locations of process connections and wiring requirements for instrumentation and controls furnished under this Contract. The instrumentation and controls subcontractor shall inspect all equipment, panels, instrumentation, controls, and appurtenances either existing or furnished under other Divisions of the Specifications to determine all requirements to interface with the control and information system. The Contractor shall coordinate the completion of any required modifications with the associated supplier of the item furnished.

F. The instrumentation and controls subcontractor shall review and approve the size and routing of all instrumentation and control cable and conduit systems furnished by the electrical subcontractor for suitability for use with the associated cable system.

G. The Contractor shall coordinate the efforts of each supplier to aid in interfacing all systems. This effort shall include, but shall not be limited to, the distribution of approved shop drawings to the electrical subcontractor and to the instrumentation and controls subcontractor furnishing the equipment under this Division.

H. The Contractor shall be responsible for providing a signal transmission system free from electrical interference that would be detrimental to the proper functioning of the instrumentation and control system equipment.

I. The Owner shall have the right of access to the instrumentation and controls subcontractor's facility and the facilities of its equipment suppliers to inspect materials and parts; witness inspections, tests, and work in progress; and examine applicable design documents, records, and certifications during any stage of design, fabrication, and tests. The instrumentation subcontractor and its equipment suppliers shall furnish office space, supplies, and services required for these surveillance activities.

J. The terms "Instrumentation", "Instrumentation and Control System", and "Instrumentation, Control, and Information System" shall hereinafter be defined as all equipment, labor, services and documents necessary to meet the intent of the Specifications.

1.04 INSTRUMENTATION AND CONTROL SYSTEM SUBCONTRACTOR QUALIFICATIONS

A. Instrumentation and control system subcontractor shall be regularly engaged in the detailed design, fabrication, installation, and startup of instrumentation and control systems for municipal facilities. Instrumentation and control system subcontractor shall have a minimum of five years of such experience, and shall have completed a minimum of three projects of similar type and size as that specified herein. As used herein, the term “completed” shall mean that a project has been brought to final completion and final payment has been made.

B. The instrumentation and controls subcontractor’s staff shall meet the following requirements:

1. Programmers:

    a. As a minimum, all programmers shall have a minimum of 5 years of experience in industrial PLC and HMI programming.

2. Field Service Technicians:

    a. All service technicians shall have a minimum of five years of experience in PLC systems and HMIs.

    b. All service technicians shall be capable of programming minor edits in the project PLC’s and uploading or downloading PLC applications.

    c. All service technicians shall have experience troubleshooting: motor starters, PLC’s, computers, HMI systems, and basic electrical controls.

    d. Service technicians shall show proficiency in using the following equipment: volt meters, PLC programming software, HMI configuration tools.

1.05 DEFINITIONS

A. Solid State: Wherever the term solid state is used to describe circuitry or components in the Specifications, it is intended that the circuitry or components shall be of the type that convey electrons by means of solid materials such as crystals or that work on magnetic principles such as ferrite cores. Vacuum tubes, gas tubes, slide wires, mechanical relays, stepping motors or other devices will not be considered as satisfying the requirements for solid state components of circuitry.

B. Bit or Data Bit: Whenever the terms bit or data bit are used in the Specification, it is intended that one bit shall be equivalent to one binary digit of information. In specifying data transmission rate, the bit rate or data bit rate shall be the number of binary digits transmitted per second and shall not necessarily be equal to either the maximum pulse rate or average pulse rate.

C. Integrated Circuit: Integrated circuit shall mean the physical realization of a number of circuit elements inseparably associated on or within a continuous body to perform the function of a circuit.

D. Mean Time Between Failures (MTBF): The MTBF shall be calculated by taking the number of system operating hours logged during an arbitrary period of not less than six months and dividing by the number of failures experienced during this period plus one.

E. Mean Time to Repair (MTTR): The MTTR shall be calculated by taking the total system down time for repair over an arbitrary period of not less than six months coinciding with that used for calculation of MTBF and dividing by the number of failures causing down time during the period.

F. Availability: The availability of a non-redundant device or system shall be related to its MTBF and MTTR by the following formula:

A=100 x (MTBF/(MTBF + MTTR)) Percent

The availability of a device or system provided with an automatically switched backup device or system shall be determined by the following formula:

A=A2 + 1 ((1 A1) x (1 A1))

where:

A1=availability of non-redundant device or system

A2=availability of device or system provided with an automatically switched backup device or system

G. Abbreviations: Specification abbreviations include the following:

A	Availability
ADC	Analog to Digital Converter
AVAIL	Available
ATA	Advanced Technology Attachment
BCD	Binary Coded Decimal
CSMA/CD	Carrier Sense Multiple Access/Collision Detect
CPU	Central Processing Unit
CRC	Cyclic Redundancy Check
CRT	Cathode Ray Tube
CS	Control Strategy
DAC	Digital to Analog Converter
DBMS	Data Base Management System
DDR	Double Data Rate
DIMM	Dual In-line Memory Module
DMA	Direct Memory Access
DPDT	Double Pole, Double Throw
DVD	Digital Video Disc
DVE	Digital to Video Electronics
ECC	Error Correction Coding
EPROM	Erasable Programmable Read Only Memory
FDM	Frequency Division Multiplexing
FSK	Frequency Shift Keyed
GB	Gigabyte
Gbps	Gigabits per second
HMI	Human Machine Interface
I/O	Input/Output
LAN	Local Area Network

LCD	Liquid Crystal Display
LED	Light Emitting Diode
MB	Megabyte
Mbps	Megabits per second
MCC	Motor Control Center
MTBF	Mean Time Between Failures
MTTR	Mean Time To Repair
OS	Operating System
OIT	Operator Interface Terminal
PCB	Printed Circuit Board
PLC	Programmable Logic Controller
RAID	Redundant Array of Inexpensive Discs
PROM	Programmable Read Only Memory
RAM	Random Access Memory
RMSS	Root Mean Square Summation
ROM	Read Only Memory
RTU	Remote Telemetry Unit
SATA	Serial ATA
SCADA	Supervisory Control and Data Acquisition
SDRAM	Synchronous Dynamic Random-Access Memory
SIMM	Single In-line Memory Module
SPDT	Single Pole, Double Throw
TB	Terabyte
TDM	Time Division Multiplexing
TFT	Thin Film Transistor
USB	Universal Serial Bus
UPS	Uninterruptible Power Supply
WAN	Wide Area Network

H. To minimize the number of characters in words used in textual descriptions on displays, printouts, and nameplates, abbreviations may be used subject to Engineer approval. If a specified abbreviation does not exist for a particular word, an abbreviation may be generated using the principles of masking and or vowel deletion. Masking involves retaining the first and last letters in a word and deleting one or more characters (usually vowels) from the interior of the word.

1.06 ENVIRONMENTAL CONDITIONS

A. Instrumentation equipment and enclosures shall be suitable for ambient conditions specified. All system elements shall operate properly in the presence of telephone lines, power lines, and electrical equipment.

B. Inside control rooms and climate-controlled electrical rooms, the temperature will normally be 20 to 25 degrees Celsius; relative humidity 40 to 80 percent without condensation and the air will be essentially free of corrosive contaminants and moisture. Appropriate air filtering shall be provided to meet environmental conditions (i.e., dust).

C. Other indoor areas may not be air conditioned/heated; temperatures may range between 0 and 40 degrees Celsius with relative humidity between 40 and 95 percent.

D. Outdoor equipment including instrumentation and panels may be subjected to wind, rain, lightning, and corrosives in the environment, with ambient temperatures from 0 to 48 degrees Celsius and relative humidity from 10 to 100 percent. All supports, brackets and interconnecting hardware shall be aluminum or Type 316 stainless steel as shown on the Drawings or indicated by the individual specifications.

1.07 INSTRUMENT AND HARDWARE SUBMITTALS

A. Submit in accordance with submittal requirements of the Contract Documents.

B. Submit information for all new hardware including, but not limited to, the following:
   1. Product (item) name and tag number.
   2. Catalog cut sheets.
   3. Manufacturer's complete model number.
   4. Location of the device.
   5. Input - output characteristics.
   6. Range, size, and graduations.
   7. Physical size with dimensions, NEMA enclosure classification and mounting details.
   8. Materials of construction of all enclosures, wetted parts, and major components.
   9. Instrument or control device sizing calculations where applicable.
   10. Certified calibration data on all flow metering devices.
   11. Environmental requirements during storage and operation.
   12. Associated surge protection devices.
   13. Mounting requirements.
   14. Environmental requirements during storage and operation.
   15. Complete panel fabrication shop drawings including panel layouts and wiring diagrams.
   16. Complete network diagram showing all network communications to PLCs, UPSs, network switches, and communication cables and protocols used between all connected devices.

1.08 SOFTWARE SUBMITTALS

A. Submit in accordance with submittal requirements of the Contract Documents.

B. Software submittals shall include the following as a minimum:
   1. PLC input/output schedules for interface with values being sent to and received from the existing and new field I/O and internal data registers. List complete addresses and tagnames for each data register.

2. Written control strategy documentation to describe the proposed control logic interface with the I/O.

4. Upon approval of PLC input/output schedules and written control strategy documentation, submit a complete hard copy of fully commented PLC ladder logic programming and a complete hard copy of proposed display screen modifications.

1.09 OPERATION AND MAINTENANCE MANUALS

A. Submit in accordance with submittal requirements of the Contract Documents.

B. Provide equipment operation and maintenance manuals for new instruments. The manuals shall contain all illustrations, detailed drawings, wiring diagrams, and instructions necessary for installing, operating, and maintaining the equipment. The illustrated parts shall be numbered for identification. All modifications to manufacturer standard equipment and/or components shall be clearly identified and shown on the drawings and schematics. All information contained therein shall apply specifically to the equipment furnished and shall only include instructions that are applicable. All such illustrations shall be incorporated within the printing of the page to form a durable and permanent reference book.

C. The manuals shall be prepared specifically for this installation and shall include all required cuts, drawings, equipment lists, descriptions, etc. that are required to instruct operation and maintenance personnel unfamiliar with such equipment. The maintenance instructions shall include trouble shooting data and full preventive maintenance schedules. The instructions shall be bound in locking 3-D-ring binders with bindings no larger than 3.5 inches and external hard drives with PDF files shall be provided. The manuals shall include 15% spare space for the addition of future material. The instructions shall include Drawings reduced or folded and shall provide at least the following as a minimum.

1.10 FINAL SYSTEM DOCUMENTATION

A. Provide two copies on external hard drive/flash drive for all software (actual program files and pdf copies). PLC files shall include all comments. Provide complete control panel as-installed panel fabrication and wiring diagrams for new panels in .dwg and .pdf format on flash drive.

1.11 SHIPPING, HANDLING, AND STORAGE

A. In addition to shipping, handling, and storage requirements specified under Division 01, air conditioning/heating shall be provided for storage of all new field instrumentation and ancillary devices to maintain temperatures between 20 and 25 degrees C and relative humidity between 40 to 60 percent without condensation. The air shall be filtered and free of corrosive contaminants and moisture.

1.12 GUARANTEE

A. The instrumentation and control system subcontractor through the Contractor shall install, maintain, and guarantee the Instrumentation, Control and Information System as specified under the General Conditions and Division 01 of the Specifications.

B. Maintenance personnel provided by the instrumentation and control system subcontractor shall instruct the Owner's personnel in the operation, adjustment, calibration, and repair of the equipment being serviced. All preventive and corrective activities shall be documented with

service reports, which shall identify the equipment being serviced, state the condition of the equipment, describe all work performed, and list materials used. A copy of all service reports shall be delivered to the Owner on the day the work is performed.

C. The instrumentation and control system subcontractor shall provide the services of factory-trained service technician(s) at least twice during the guarantee period, for the purpose of performing preventive hardware maintenance.

D. Corrective hardware and software maintenance during the guarantee period shall be performed in accordance with the requirements of Division 01 and, in addition, shall meet the following requirements:

1. Corrective hardware maintenance shall be performed by factory-trained service technician(s) specifically trained to service the digital equipment provided. Technicians possessing suitable training and experience shall be provided to perform corrective maintenance on all other equipment. The hardware service technician(s) shall be available on-site within 24 working hours after notification by the Owner.

2. Corrective software maintenance shall be performed for software provided by the instrumentation subcontractor and incorporated into the system prior to the completion of system commissioning. Software service programmer(s) shall be available for consultation within four business hours and, if required, on-site within 16 business hours after notification by the Owner. Corrective software maintenance shall include the supply, installation and startup of all application software upgrades released during the guarantee period.

3. Corrective hardware and software maintenance performed during the guarantee period shall be performed at no cost to the Owner.

4. As used herein, the term "working hours" shall be defined as those of the treatment facility (seven days per week, 24 hours per day). The term "business hours" shall be defined as the hours between 8:00 a.m. and 5:00 p.m., local time, Monday through Friday; excluding holidays.

5. The guarantee period shall commence upon final acceptance of the completed treatment facility in accordance with the provisions of the Contract Documents.

PART 2 – PRODUCTS

2.01 NAMEPLATES

A. All instruments, control panels, and all items of digital hardware shall be identified with nameplates. Each nameplate shall be located so that it is legible from the normal observation position and is clearly associated with the device or devices it identifies. Nameplates shall be positioned so that removal of the device for maintenance and repair shall not disturb the nameplate. Nameplates shall include the equipment identification number and description. Abbreviations of the description shall be subject to Engineer approval.

B. Nameplates shall be made of 1/16-inch thick machine engraved laminated phenolic plastic having white numbers and letters not less than 3/16-inch high on a black background.

C. Nameplates shall be attached to metal equipment by stainless steel screws and to other surfaces by an epoxy-based adhesive that is resistant to oil and moisture. In cases where the label cannot be attached by the above methods, it shall be drilled and attached to the associated device by means of stainless steel wire.

PART 3 – EXECUTION

3.01 CLEANING

A. The Contractor shall thoroughly clean all soiled surfaces of installed equipment and materials.

B. Upon completion of the instrumentation and control work, the Contractor shall remove all surplus materials, rubbish, and debris that has accumulated during the construction work. The entire area shall be left neat, clean, and acceptable to the Owner.

3.02 TESTING REQUIREMENTS

A. The Contractor shall provide the services of experienced factory trained technicians, tools, and equipment to field calibrate, test, inspect, and adjust all equipment in accordance with manufacturer's specifications and instructions.

B. The proper control of all final control elements shall be verified by tests conducted in accordance with the requirements specified herein.

C. All modulating final control elements shall be tested for appropriate speed or position response by applying power and input demand signals, and observing the equipment for proper direction and level of reaction. Each final control element shall be tested at 0, 25, 50, 75, and 100 percent of signal input level and the results checked against specified accuracy tolerances. Final control elements which require turndown limits such as VFD's shall be initially set during this test.

D. Prior to control system startup and testing, each monitoring and control loop shall be tested on an individual basis from the primary element to the final element, including the operator work station or loop controller level, for continuity and for proper operation and calibration.

E. Signals from transducers, sensors, and transmitters shall be utilized to verify control responses. Simulated input data signals may be used subject to prior written approval by the Engineer. All modes of control shall be exercised and checked for proper operation.

F. Control system startup and testing shall be performed to demonstrate complete compliance with all specified functional and operational requirements. Testing activities shall include the simulation of both normal and abnormal operating conditions.

G. Each loop and control strategy test shall be witnessed and signed off by both the Contractor (or designee) and the Engineer upon satisfactory completion.

H. Upon completion of the startup tests and prior to final system acceptance, the new controls shall be tested under normal operating conditions, initiated either automatically or manually, over a 30-day test period to demonstrate continuous reliable operation as intended.

I. If the system fails the 30-day availability test, unless the failure is related to programming, the 30-day test period shall be restarted after the failed component is repaired / replaced and full operation is restored.

3.03 FINAL ACCEPTANCE

A. Final acceptance of the Instrumentation, Control and Information System will be determined as complete by the Engineer, and shall be based upon the following:

1. Receipt and acceptance of all control panel completion reports, control panel test reports, and other documentation as required by the Contract Documents.

2. Completion of the Final Acceptance Test (FAT). Final sign off of the FAT shall include endorsement of test results from Owner.

3. Completion of all punch-list items that are significant in the opinion of the Engineer.

4. Completion of all specified control system training requirements.

B. Final acceptance of the Control and Information System in its entirety shall be required to achieve Substantial Completion. Substantial Completion establishes the commencement date of the warranty period and all warranty period services.

C. All equipment in service, operational, and in use by the Owner prior to the commencement of the one (1) year warranty period shall be warranted and maintained by the Contractor at no additional cost to the Owner.

D. Refer to the General Conditions for additional project closeout requirements.

[END OF SECTION]

SECTION 17500

CONTROL PANEL

PART 1 - GENERAL

1.01 THE REQUIREMENT

A. The Contractor shall furnish, test, install, and place into satisfactory operation the control panel(s), with all spare parts, accessories, and appurtenances as specified herein and as shown on the Drawings.

B. Control panel shall be assembled, wired, and tested in the instrumentation and control system subcontractor's own facilities, unless specified otherwise. All components and all necessary accessories such as power supplies, conditioning equipment, mounting hardware, signal input and output terminal blocks, and plug strips that may be required to complete the system shall be provided.

1.02 RELATED WORK SPECIFIED ELSEWHERE

A. Section 17000 – Instrumentation and Control, General

B. Section 17650 – Pressure Gauges

C. Section 17701 – Electromagnetic Flow Meters

D. Section 17749 – Submersible Level (Pressure) Sensors

E. Division 16 sections.

1.03 GENERAL INFORMATION AND DESCRIPTION

A. The panel itself and all interior and exterior equipment shall be identified with nameplates. The equipment shall be mounted such that service can occur without removal of other equipment. Face mounted equipment shall be flush or semi-flush mounted with flat black escutcheons. All equipment shall be accessible such that adjustments can be made while the equipment is in service and operating. All enclosures shall fit within the allocated space as shown on the Drawings.

1.04 TOOLS, SUPPLIES AND SPARE PARTS

A. Tools, supplies and spare parts shall be provided as specified in Section 17000 – Instrumentation and Control, General.

B. Provide 10 percent spare fuses of each type furnished, but not less than two of each type.

C. Provide 10 percent spare terminal blocks (pre-installed).

D. Provide 10 percent spare bulbs for indicators furnished, but not less than four.

PART 2 - PRODUCTS

2.01 CONTROL PANEL

A. General: The control panel electrical service shall be as indicated on the Drawings. The specifically panel shall be designed for the equipment supplied. The panel shall perform the following functions:

1. Power to and control of the pumping equipment.

2. Interface with emergency generator through a panel mounted receptacle.

3. Interface with a local audible and visual alarm for critical alarms.

4. Provide level indication and historical digital recording.

5. Provide phase fail and surge protection for incoming power and input/outputs.

6. Provide power distribution to pumping equipment, station lighting, and instruments, as shown on the Drawings.

B. Control Panel Construction

1. Panel enclosure shall be rack-mounted, constructed in accordance with UL 508 requirements for enclosed industrial control panels and shall bear the serialized UL label.

2. Enclosures shall be NEMA 4X Type 316 stainless steel enclosures, minimum 14 gauge, suitable for enclosures mounted outdoors in corrosive environments, including hinges, pins, latches, and fasteners.

3. Exterior of the outdoor panels shall be coated with a UV-resistant, white laminate baked enamel powder coating to reduce temperature inside the panel.

4. The enclosures shall have a continuous hinged outer door with suitable, single handle locakable, 3-point latching mechanism that maintains the NEMA rating and continuous gaskets to keep ambient corrosive gasses from entering the panel when closed.

5. The enclosures shall have a 12-ga steel, formed, removable subpanel and an aluminum dead-front panel door behind the main panel door.

6. The subpanel shall be degreased, cleaned, treated with a phosphatizing process, then primed and painted with white industrial grade baked enamel.

7. The enclosures and mounting systems shall be designed to withstand wind loads as required by applicable building codes.

8. Enclosures shall be of formed or welded construction, reinforced with slotted channels, or equal, to facilitate mounting of internal components or equipment.

9. Panels shall be prefabricated enclosures as manufactured by Hoffman, Saginaw Control and Engineering (SCE), or approved equal.

C. Control Panel Mounting

1. The Contractor shall fabricate and install a suitable mounting rack for the control panel as indicated on the Drawings. Support shall be adequate to provide a rigid support for the supplied panel and be designed to withstand structure wind loadings.

D. Panel Fabrication:

1. Enclosures shall provide mounting for power supplies, control equipment, input/output subsystems, panel mounted equipment, and appurtenances. Ample space shall be provided between equipment to facilitate servicing and cooling.

2. Enclosures shall be constructed so that no screws or bolt heads are visible when viewed from the front. Penetrations for instruments and other devices shall be clean and smoothly finished with rounded edges.

3. The temperature inside the enclosure shall be continuously monitored and shall generate an alarm to the PLC if the temperature rises to an adjustable, preset high temperature.

4. Ventilation of Heat: Panels shall be equipped with internal ventilation and heat sink components to adequately dissipate heat generated by equipment mounted inside the panel while maintaining the NEMA 4X rating.

5. Intrusion alarm switches, wired fail-safe, shall be provided on all enclosures containing digital hardware and shall generate an alarm to the panel PLC when enclosure door is opened.

6. All wiring shall be bundled with nylon cable ties when exposed (leaving in conduits, at bends, etc.) but otherwise shall be routed and enclosed in vented plastic wireway as required. Wireways shall be oversized by a minimum of 10%; overfilled wireways shall not be acceptable. DC power, analog signal and discrete signals shall be run in separate wireways from AC signal and power wiring.

7. Spare field wiring shall be bundled, tied, and labeled as specified above, and shall be neatly coiled in the bottom of the cabinet.

8. All installed spare I/O hardware shall be wired along with live I/O wiring to the field wiring terminal blocks within the cabinet. Where space for spare I/O modules has been provided with the PLC backplane or DIN-rail mounting system, corresponding space for wiring, surge protection, and terminations shall be furnished within the cabinet.

9. A copper ground bus shall be installed in each cabinet and shall be connected to the station's power ground.

10. Interior panel wiring shall be tagged at all terminations with machine-printed self-laminating labels. Labeling system shall be Brady TLS 2200 Printer with TLS

2200®/TLS PC Link™ labels, or equivalent system by Seton or Panduit. The wire numbering system and identification tags shall be coordinated with field wire numbering system used by the electrician under Division 16.

11. Main breaker and branch breaker sizes shall be coordinated such that an overload in a branch circuit will trip only the branch breaker but not the main breaker.

12. Enclosure shall be provided with a 120-volt, 20A duplex receptacle and LED service lights. Power to these devices shall be independent from the PLC power supply and its associated uninterruptible power system. Panel light shall be manually activated by an ON/OFF switch on the light as well as automatically come on when the panel is opened if left in the ON position.

E. Control Panel Components:

1. Manual main breaker handle mounted on the panel dead-front door to disconnect power to the panel and prevent the door from being opened when in the ON position unless manually bypassed. Main breaker shall be Allen Bradley 1489-M1C200, or approved equal.

2. NEMA Rated Motor Starters: The panel shall include motor starters for each pump motor for constant speed pump stations, if noted on the contract drawings. The motor starters shall be FVNR (full voltage non-reversing), with overload relays and reset buttons. The contactors shall feature double break silver cadmium oxide contacts, pressure type terminals, arc barriers, free floating armature magnet frame, molded continuous duty coil and stainless steel springs. Starter overload heater coils shall be sized to protect installed motor at full load AMP rating. The motor starters shall be Square D, or approved equal.

3. Branch Circuit Breakers: Circuit breakers shall be quick-make, quick-brake and trip free. The thermal and magnetic elements shall operate independently and be designed with a common trip bar breaking all poles when a fault is received on any pole. The circuit breakers shall be as manufactured by Allen Bradley for 120V and 460V (if required per the contract drawings) service, or approved equals. Provide breakers for the following:

   a. Breakers for each motor power circuit.

   b. 2-Pole breaker for the panel control power step-down transformer.

   c. 120V breaker for the panel lighting and receptacle.

   d. 120V breaker for the panel control circuit to the panel UPS.

   e. Branch circuit breakers off of the UPS output power for the panel's 24Vdc power supply and for each PLC input/output module.

13. Programmable Controller (PLC): The panel shall include a PLC for all control logic. The PLC shall be Allen-Bradley MicroLogix 1400, or as noted on the contract drawings.

a. PLC hardware and software shall be provided to allow operators to make changes to setpoints and control settings within the PLC. Software ladder programming shall be set up to allow modifications to the programming through direct laptop connection at the PLC.

b. Provide input/output modules in sufficient quantities specified herein and as required to meet functional requirements of the Specification. PLC hardware and power supplies shall be provided with all necessary cabling, mounting hardware, racks, and connectors for a fully functional system. I/O terminal strips shall be removable without disturbing field wiring.

c. Provide a minimum of 20% spare slot capacity in the card rack for future expansion and 15% spare I/O capacity for each type of input (rounded up to the next whole number of required points or channels). Provide 25% spare memory on the PLC CPU after the PLC has been programmed for full operation.

d. Input/Output Circuit Arrangement: Signal and control circuitry to individual input/output modules shall be arranged such that board failure shall not disable both pumps.

14. Operator Interface: An operator interface shall be provided that gives operators full control parameter and monitoring capabilities for the station. The interface shall be a minimum 7-inch display screen. Graphics are to be color display, primarily in tabular format. Operator input is to be available through touch screen interface. Operator Interface shall be 24Vdc powered, mounted on the panel front door, and shall be Panelview 800 series, or approved equal.

15. Uninterrupted Power Supply (UPS): The PLC shall operate on 24 VDC input power from a UPS securely mounted on a din rail inside the panel (loose installation at bottom of panel not acceptable). The UPS shall be as manufactured by Phoenix Contact or approved equal, with outputs to the PLC to indicate battery life low, running on battery status, UPS fault. UPS shall be sized, and panel shall be wired, to power all PLC components, telemetry communications equipment, and station control functions within the panel. Panel shall be sized to dissipate the heat generated by the UPS when running on battery, full load.

16. Telemetry Interface: The panel PLC shall communicate with the City's SCADA network via telemetry communications using a cellular modem. Model shall be Prosoft, or approved equal.

17. Surge Suppression: Provide a surge arrestor installed on the line side of the main breaker in accordance with manufacturer's instructions. Provide surge suppression devices on all signal and power leads on all circuits that have any part of the control or power circuit that extends past the limits of the control panel. Surge devices shall be as manufactured by Phoenix Contact, or approved equal:

a. for 120VAC Power use Phoenix Contact 2859479

b. for 2-channel 2 wire 24 VDC Signal use Phoenix Contact 2800980

c. for 4-channel 24 VDC signals use Phoenix Contact 2800983

d. for Ethernet use Phoenix Contact 2881007

e. for Coaxial Antenna use Phoenix Contact 2800021

18. As-built Drawings: A laminated “As Built” copy of the panel wiring diagrams shall be provided and placed in the panel print pocket for all panels that include PLCs. All panel drawings shall be developed using AutoCad®. The drawings shall have a complete Bill of Materials, panel exterior and interior layouts, and show all electrical wiring. As-built drawings shall be submitted with the O&M materials on a CD in both AutoCad® (.dwg) and Adobe Acrobat® (.pdf).

19. Panel shall be provided with a drawing pocket for as-built panel drawings. One laminated copy of the appropriate panel as-built drawings shall be furnished and left in the pocket.

20. Panel shall be provided with a folding laptop programmer shelf on the inside of the door. When deployed, the laptop shelf shall not be greater than 48 inches above finished floor. Laptop shelf shall be fitted to door with factory applied weld-studs. Weld discoloration and enclosure penetrations will not be accepted.

21. Terminals: Terminal blocks shall be as follows:

    a. Terminal blocks shall be assembled on non-current carrying galvanized steel DIN mounting rails securely bolted to the cabinet subpanel. Terminals shall be of the screw down pressure plate type as manufactured by Phoenix Contact, or approved equal.

    b. Power terminal blocks for both 120 VAC and 24 VDC power shall be single tier with a minimum rating of 600 volts, 30 amps.

    c. Discrete signal terminal blocks shall be 2-tier with a minimum rating of 600 volts, 20 amps. One terminal block shall be used for each signal. The positive wire shall be installed on the top or left-most terminal.

    d. Analog signal terminal blocks shall be 3-tier with a minimum rating of 600 volts, 20 amps. One terminal block shall be used for each signal. The positive wire shall be installed on the top or left-most terminal and the shield/drain wire shall be installed on the bottom or right-most terminal.

    e. Only one wire shall be terminated under a single wire clamp or screw.

    f. Terminal blocks for field wire connections shall be added as needed in 10-pole increments. Terminal blocks shall be mounted with a minimum of 2” from both enclosure sides and from the bottom of the enclosure for easy access to terminal screws.

    g. Terminals shall be marked with a permanent, continuous marking strip. One side of each terminal shall be reserved exclusively for field incoming conductors. Common connections and jumpers required for internal wiring shall not be made on the field side of the terminal.

h. Separate terminal strips shall be provided for each type of power and signal used within each cabinet. Where applicable, terminal strips for different voltages of discrete signal wiring shall also be separated. Terminal strips shall be labeled as to voltage and function.

22. Wiring: All wiring shall be color-coded using tinned copper MTW #14 AWG minimum for power and control wiring and #16 twisted pair for analog signal wiring. Wiring and cables shall be numbered at each end. Wire numbers shall be printed on non-removable heat-shrink tags. Wires shall be color coded as follows:

    Equipment Ground - GREEN

    480V Power - BLACK

    120 VAC Power - BLACK

    120 VAC Power Neutral - WHITE

    120 VAC Control (Internally Powered) - RED

    120 VAC Control (Externally Powered) - YELLOW

    24 VAC Control - ORANGE

    DC Power/analog – BLUE for (+) and BLUE/WHITE for (-)

23. Component Labels: All interior panel components shall be individually labeled on the back plate with a custom engraved plastic tag with adhesive back (see Section 17000 for nameplates). The tags shall be white with black letters and match the nomenclature indicated on the as-built wiring diagrams.

24. Mounting Hardware: All mounting hardware such as screws or bolts used in the manufacturing of the control panel shall be Type 316 stainless steel. All holes in the back plate and dead front shall be drilled and tapped. No self-tapping screws, adhesive tapes, or Velcro will be accepted for the mounting of any hardware.

25. Interposing relays shall be provided on all discrete outputs on the PLC and shall be DIN rail mounting type, DPDT, minimum 10 amp, 120 VAC contact rating. Relay coils shall be 120 VAC or 24 VDC as required. Relays shall have a flag indicator to show relay status, a pushbutton to allow manual operation of the relay, and an internal pilot light to indicate power to the coil. Relays shall be as manufactured by Phoenix Contact.

26. Corrosion Protection: Panel interior components shall be treated with a corrosion inhibiting spray on all exposed metallic surfaces, particularly terminations, contacts, and wire ends. After installation, furnish corrosion inhibiting capsules that emit molecular level coating on metallic surfaces throughout the panel that provide specific corrosion barrier toward hydrogen sulfide and/or subsequent formation of sulfuric acid when combined with ambient moisture.

27. Panel Conduit Seals: All conduits entering the panel shall be sealed at the conduit entry point with a removable, expandable conduit seal material to prohibit outside air from entering the panel. Provide seal-off fittings below the panel with permanent epoxy seal material for all conduits from the wet well. Provide a NEMA 4X Type 316

stainless steel terminal junction box between the seal offs and the wet well to terminate all cables and wires with conduits to the wet wells sealed using the removable, expandable conduit seal material.

F. System Operation Controls – The station equipment shall be controlled by the panel PLC. The PLC shall control all components of the system through a combination of direct wires to field devices, remote I/O interface to field devices, and through control and setpoint registers adjustable at the panel operator interface. Controls shall be as follows:

1. Lift Station Control:

a. Provide HAND/OFF/AUTO switches, one for each pump. In HAND, power is applied directly to the pump motor with no interlocks. In OFF, power is removed from the pump motor. In AUTO, the pump is controlled by the PLC and pump protection circuits.

b. For constant speed lift stations, in AUTO, the pumps shall be controlled by adjustable level control LEAD ON, LAG ON, and PUMPS OFF setpoints based on the level signal input from the level transmitter. The LEAD pump shall start when the level rises above the LEAD ON setpoint and stops when the level falls below the PUMPS OFF setpoint. If the level continues to rise above the LAG ON setpoint, the LAG pump shall start and both pumps shall remain on until the level falls below the PUMPS OFF setpoint.

c. For variable speed pump stations, provide similar lead/lag level setpoints but once running, the pump VFD(s) shall vary the speed of the pump to maintain an adjustable level setpoint. Outputs to pumps running at the same time shall match.

d. Provide a 1-ALT-2, PUMP SELECT selector switch for duty selection of the pumps. In position "1", pump 1 shall be LEAD each time the system calls for a pump and pump 2 shall be the LAG. In position "2", pump 2 shall be LEAD each time the system calls for a pump and pump 1 shall be the LAG. In ALT, the pumps shall alternate LEAD/LAG duty when the LEAD pump is called to run.

e. Provide an auxiliary switch on each pump motor starter to activate a RUNNING indicator light and advance an Elapsed Time Meter for each pump whenever the pump is running (AUTO or HAND). PLC internal register counters shall also keep a record of each pump’s runtime on a continuous basis and on a daily basis that resets at midnight.

f. In AUTO, the pumps shall be disabled if an adjustable Low Level Lockout Alarm conditions exists in the wet well.

g. In AUTO, provide an adjustable Delay Power On Timer (initially set at 30 seconds) to assure that only one pump starts at any point, particularly while the system first starts powering up.

2. Panel Power: Provide a CONTROL POWER ON/OFF selector switch on the 120V control power input to the UPS. Provide a POWER ON indicator light to indicate that control power has been applied to the UPS input.

3. Pump Protection Relay: The enclosure shall provide space for mounting the temperature/moisture monitoring relay provided by the pump manufacturer (referred to by Flygt as the “MiniCAS” relay). Mounting, wiring, and interface with the pump manufacturer’s relay shall be furnished by the panel manufacturer and be in accordance with the pump manufacturer’s recommendations. Relay shall interface with local control devices as noted herein for motor high temperature and moisture seal leak. Power and signal wiring to and from the relay shall be verified and approved by the pump manufacturer as to the correct voltage, wire size and type, and circuit design. If the pump manufacturer recommends a relay other than the specified MiniCAS relay, all required cabling and connections shall be provided at no additional cost to the Owner.

4. Motor Protection Circuits – Each pump motor shall have motor temperature switches. In HAND or AUTO, if a motor temperature rises above setpoint, the motor shall stop and require manual reset before restarting in any mode. The motor temperature circuit shall be a hard-wired circuit to the starter. Manual reset shall be through the reset pushbutton on the panel front door and through a reset output from the PLC that can be sent remotely. Provide an indicator light on the front panel door and a SCADA alarm for this condition.

5. Moisture Seal Alarm – Each pump motor shall have motor moisture leak sensors. If either sensor in a motor detects moisture, a latched alarm shall be generated to alert operators to this condition (requires manual reset). Provide an indicator light on the front panel door for this condition.

6. Motor Fault – A motor fault shall register if the any starter overload is tripped, a load monitor detects a high load, or the motor starter run contact is not received within a preset time after the motor is called to run. For any of these conditions, the fault shall latch until manually reset, an alarm shall be sent to alert operators, and the pump shall stop. Upon reset, all settings shall be re-initiated so that the pump can resume normal operation. Manual reset shall be through the reset pushbutton on the panel front door. Provide an indicator light on the front panel door and a SCADA alarm for this condition.

7. System Alarms – Provide adjustable setpoints and an indicator light on the dead-front panel door as well as a SCADA alarm for each of the following conditions:

    a. LOW LOW LEVEL ALARM - Indicates that wet well level has dropped below setpoint and pumps have been shut off.

    b. HIGH WARNING LEVEL ALARM - Indicates that the wet well level has reached an adjustable high warning level condition.

    c. HIGH LEVEL ALARM - Indicates that the wet well level has reached a maximum high level condition as determined by the level transducer starting both pumps. Condition shall latch as alarm requiring manual reset (locally or from SCADA) and automatically reset after an adjustable time delay once the high level alarm input goes away.

8. Exterior Alarm/Beacon

a. Provide an exterior mounted alarm horn and beacon assembly on the panel exterior to be activated (horn sounds and beacon lights) upon High Level Alarm.

b. If required and shown on the contract drawings, Provide SILENCE, TEST, and RESET pushbuttons on the panel front door. The SILENCE pushbutton acknowledges the alarm (input to PLC) and stops the horn but the beacon remains lit if the condition remains. The TEST button activates both the horn and the beacon (no input to PLC). The RESET button stops the horn and turns off the latched beacon if the condition has cleared.

c. Provide a remote silence output from the PLC.

d. Alarm horn shall rated NEMA4X, with a pitch at 2900HZ and 80-95dB at a fast pulse, 24VAC powered. Horn shall be a Federal Signal 450E-24-31 W/WB or approved equal.

e. Alarm beacon shall be a red LED signal device, strobe type and shall be 24VAC powered and be a Federal Signal 1412T-24R or approved equal.

9. Alarm Reset: If required and shown on the contract drawings, provide an alarm reset pushbutton on the panel dead-front door to reset any latched alarm.

10. Station Intrusion: Provide a Square D 9007 or approved equal, proximity type door switch mounted on the station's entrance door (active leaf) to indicate the door has been opened. Switch shall be rated NEMA4X.

G. SCADA Control Interface – SCADA control interface shall be via communications between the panel PLC and the City's SCADA network over the telemetry link. Provide interface signals as follows:

1. Run status signal for each motor

2. Alarm condition signals for each individual alarm condition
   - Starter overload for each constant speed motor
   - High current load for each motor
   - Failed to start for each pump
   - High motor temperature for each pump
   - Moisture seal leak for each pump
   - Low Level shutoff
   - High warning level
   - High level alarm
   - UPS fault
   - Power Loss, UPS running on battery
   - Station intrusion
   - Phase monitor alarm

3. Alarm RESET output from SCADA

4. In AUTO status for each motor

5. Continuous and Daily Runtime calculation value (in hours and tenths of hours) for each motor

6. Daily Runtime calculation value for the duration of time both pumps are running at the same time.

7. Daily Starts value for each motor

8. Delay Power On Timer setpoint from SCADA

9. Pump LEAD ON, LAG ON, and PUMPS OFF setpoints from SCADA

10. Low level, High warning level, and High level alarm setpoints from SCADA

11. Station flow signal

12. Wet well level signal

13. Station communication loss signal

H. Panel Control and Power Interface: Provide terminals to interface with local control devices, instruments, motors, and other devices located outside the control panel. Separate 480V power terminals from 120V terminals and separate 24Vdc signal terminals from other power terminals.

PART 3 - EXECUTION

3.01 CONTROL PANEL PROGRAMMING

A. Programing shall be furnished to perform all functions described, making use of the various IEC languages as appropriate to the specific task and shall be performed in a modular style making extensive use of program blocks (subroutines) and program variables to be passed to the program blocks for specific equipment. It is the intent of this requirement to allow for enhanced readability and ease of modification of the program code through the elimination of multiple instances of repeated code for the same function in a “hard-coded” style.

B. Extensive, clear and concise program documentation comments shall be placed in the program code to describe the functions of all elements of the program code. PLC code that does not contain comments shall be rejected.

C. Programming shall adhere to minimum PLC standards, including:

1. Discrete data corresponding to a single digital I/O point as either a hardwired I/O point or an internal bit in the PLC data memory file.

2. Analog values registered in PLC memory in a binary data format either as a floating-point register or an integer register

3. PLC programs shall be configured to provide bump less output control when transitioning from PLC auto to PLC manual control. Process control of equipment shall be performed in the PLC not from SCADA or field devices

4. All PLC registers shall be identified with an appropriate address symbol that corresponds to the adopted tagging and naming conventions. All PLC logic and subroutines shall include ladder-rung descriptions/comments that explains the control logic and identifies its purpose in an English descriptive format. Rung comments will be provided for each set of controls. At the beginning of each process routine a process description explaining the entire process will be provided. At each rung that performs a crucial code a rung description will be provided to explain the PLC code.

5. IO Faults for Local Modules and Ethernet connected devices shall not cause a major fault on the PLC processor. A processor fault shall provide an alarm to SCADA.

6. PLC communications shall be monitored in the PLC code and mapped to SCADA I/O database to indicate communications status. Status indication in SCADA shall report OK for a valid communications path or FAULTED for an invalid path.

[END OF SECTION]

SECTION 17650

PRESSURE GAUGES

PART 1 - GENERAL

1.01 THE REQUIREMENT

A. The Contractor shall furnish, test, install, and place in satisfactory operation the pressure gauges, with all spare parts, accessories, and appurtenances as herein specified, and as shown on the Drawings.

1.02 RELATED WORK SPECIFIED ELSEWHERE

A. Section 17000 – Instrumentation and Control, General

PART 2 - PRODUCTS

2.01 PRESSURE GAUGES

A. All gauges shall be designed in accordance with the ASME B40.1 entitled, "Gauges, Pressure, Indicating Dial Type - Elastic Element".

B. All gauges shall be direct reading type. Snubbers shall be provided on all gauges. Gauge full-scale pressure range shall be selected such that the maximum operating pressure shall not exceed the approximately 75% of the full-scale range.

C. Gauge increments shall not exceed 2 psi, unless approved by Engineer.

D. Features

1. Mounting: ½" NPT, lower stem mount type.
2. Accuracy: 0.5% full scale.
3. Case: Solid front, black phenolic material.
4. Dial: White background and black letters.
5. Glass: Shatterproof.
6. Blow-out protection: Back.
7. Pressure element: stainless steel bourdon tube.
8. Movement: Stainless steel, Teflon coated pinion gear and segment.
9. Gaskets: Buna-N.

E. Liquid-filled or equivalent mechanically-damped gauges shall be used if the gauges are installed with pumps, or where gauges are subjected to vibrations or pulsation. Filling fluid shall be silicone unless oxidizing agents such as sodium hypochlorite are present, where halocarbon shall be used.

F. Gauge size shall be 2" for line sizes up to 3" and 4½" for line sizes of 4" or greater.

G. Diaphragm seals and isolating ring seals shall be furnished for each pressure gauge.

H. The complete gauge assembly and appurtenances shall be fully assembled and tested prior to field mounting. A ½" isolation stainless steel ball valve shall be provided for each gauge assembly.

I. Pressure and vacuum gauges shall be Ashcroft Duragauge Model 1279, Ametek-U.S. Gauge Division, H.O. Trerice Co., WIKA Instrument Corporation, Rosemount or equal.

PART 3 - EXECUTION

3.01 INSTALLATION

A. Install in accordance with manufacturer's recommendations.

[END OF SECTION]

SECTION 17701

ELECTROMAGNETIC FLOW METERS

PART 1 - GENERAL

1.01 THE REQUIREMENT

A. The Contractor shall furnish, test, install and place in satisfactory operation the magnetic flow meters, with all spare parts, accessories, and appurtenances as herein specified and as shown on the Drawings.

1.02 RELATED WORK SPECIFIED ELSEWHERE

A. Section 17000 – Instrumentation and Control, General.

PART 2 - PRODUCTS

2.01 ELECTROMAGNETIC FLOW METER

A. Electromagnetic flow meter systems shall include a electromagnetic flow tube and a microprocessor-based "smart" transmitter that is capable of converting and transmitting a signal from the flow tube for wastewater-liftstation applications and environment. Electromagnetic flow meters shall utilize the characterized field principle of electromagnetic induction and shall produce DC signals directly proportional to the liquid flow rate.

B. Each meter shall be furnished with a stainless steel metering tube and carbon steel flanges with a hard rubber (NBR or ebonite) liner as required by the application and/or as specified herein. Liner shall have a minimum thickness of 0.125 inches. The inside diameter of the liner shall be within 0.125 inches of the inside diameter of the adjoining pipe. Liner protectors shall be provided on all flow tubes.

C. The flow tube shall be provided with bullet nose electrodes.

D. The sensor shall house two measuring electrodes, a grounding electrode, and one for physical empty pipe detection. The electrodes shall be made of 316L stainless steel.

E. Grounding rings shall be minimum 316 stainless steel, and shall be compatible with the process fluid.

F. All materials of construction for metallic wetted parts (electrodes, grounding rings, etc.) shall be minimum 316 stainless steel, but shall be compatible with the process fluid for each meter in accordance with the recommendations of the manufacturer. Verify with the manufacturer that the selected electrode material for the electromagnetic flow meters is the least likely material to be affected by either corrosion or erosion.

G. Flow tube shall be rated for pressures up to 2.0 times the flange rating of adjacent piping. System shall be rated for ambient temperatures of -30 to +65°C.

H. Unless otherwise required by the Contract Documents, transmitter shall be remote, not integral to, the flow meter body.

I. Meter and transmitter housings shall meet NEMA 4X requirements as a minimum. Non-metallic transmitter housings shall not be acceptable.

J. The transmitter shall provide pulsed DC coil drive current to the flow tube and shall convert the returning signal to a linear, isolated 4-20 mA DC signal. The transmitter shall utilize "smart" electronics and shall contain automatic, continuous zero correction, signal processing routines for noise rejection, and an integral LCD readout capable of displaying flow rate and totalized flow. The transmitter shall continuously run self-diagnostic routines and report errors via English language messages.

K. Transmitter shall be capable of generating an electronic flow meter calibration verification (E+H Heartbeat Verification or equal) document.

L. The transmitter shall be equipped with an RJ45 port capable of communicating with the PLC via Profinet. A password-based security lockout feature shall be provided to prevent unauthorized modification of configuration parameters.

M. The transmitter's preamplifier input impedance shall be a minimum of 10^{9}-10^{11} ohms which shall make the system suited for the amplification of low-level input signals and capable of operation with a material build up on the electrodes.

N. The transmitter shall provide an automatic low flow cutoff below a user configurable low flow condition (0-10%). The transmitter's outputs shall also be capable of being forced to zero by an external contact operation.

O. Each flow tube shall be factory calibrated and assigned a calibration constant or factor to be entered into the associated transmitter as part of the meter configuration parameters. Manual calibration of the flow meter shall not be required. Meter configuration parameters shall be stored in non-volatile memory in the transmitter. An output hold feature shall be provided to maintain a constant output during configuration changes.

P. Accuracy shall be a minimum of 0.20% of rate over the flow velocity range of 1.0 to 33.0 fps. Repeatability shall be 0.1% of rate; minimum turndown shall be 100:1. Maximum response time shall be adjustable between 5 and 200 milliseconds as a minimum. Transmitter ambient temperature operating limits shall be -40 to +60°C.

Q. Power supply shall be 24 V DC OR 120 VAC if required by manufacturer

R. Flow tubes shall be 150-lb flange mounted unless otherwise noted. The cables for interconnecting the meter and transmitter shall be furnished by the manufacturer. Transmitter shall be a remote wall mounted display/transmitter.

S. The display/transmitter shall be protected from the sun by a pipe stand mounted 316 stainless steel or aluminum sunshield.

T. Magnetic flow meter systems shall be Endress + Hauser Proline Promag W 500 or approved equal.

PART 3 - EXECUTION

3.01 REQUIREMENTS

A. Install instruments in accordance with Section 17000, Instrumentation – General.

B. Ground electromagnetic flow meter flow tubes and grounding rings in strict accordance with the manufacturer's recommendations.

[END OF SECTION]

SECTION 17749

SUBMERSIBLE LEVEL (PRESSURE) SENSORS

PART 1 - GENERAL

1.01 THE REQUIREMENT

A. The Contractor shall furnish, test, install, and place in satisfactory operation the submersible level (pressure) sensors, with all spare parts, accessories, and appurtenances as herein specified and as shown on the Drawings.

1.02 RELATED WORK SPECIFIED ELSEWHERE

A. Section 17000 – Instrumentation - General.

PART 2 - PRODUCTS

2.01 SUBMERSIBLE LEVEL (PRESSURE) SENSORS

A. Submersible level (pressure) sensors shall consist of a pressure-sensing probe assembly with a depth cable molded directly to the probe body. Sensing probe housing shall be fabricated of type 316 stainless steel. The depth support cable shall be polyethylene (PE), polyurethane (PUR), or fluorinated ethylene propylene (FEP) and shall contain a strength relief member constructed of high-strength PE fibers, a vent tube, and conductors for electrical power and signal.

B. The sensor shall contain an encapsulated pressure sensing element which is electrically and physically isolated from the media via a ceramic isolation diaphragm. The pressure sensing connection shall be protected from damage by a removable acetal nose cone or equivalent guard.

C. Each submersible level transducer shall be provided with a NEMA 4X termination/junction box and PTFE filter to prevent moisture from entering the vent tube.

D. Sensor specifications shall be as follows:

1.	Sensor Rating:	NEMA 7, loop-powered
2.	Output Signal:	4-20 mA HART, 2-wire design
3.	Accuracy:	± 0.20%, F.S. (full scale)
4.	Long Term Stability:	± 0.1% F.S./year
5.	Zero Offset and Span Setting:	± 0.25% F.S., max.
6.	Operating Temperature:	-10 to +70 degrees C
7.	Compensated Temperature:	0 to +70 degrees C
8.	Overpressure Limits:	At least 2x full scale range
9.	Cable Length:	As required
10.	Electrical Area Classification:	Class 1, Division 1

E. Submersible level (pressure) sensors shall be WaterPilot Model FMX 21 by Endress & Hauser, equivalent by Druck, KPSI, or approved equal.

PART 3 - EXECUTION

3.01 REQUIREMENTS

A. Install in accordance with manufacturer's recommendations and Section 17000, Instrumentation – General.

[END OF SECTION]

SECTION 17760

PRESSURE INDICATING TRANSMITTERS

PART 1 - GENERAL

1.01 THE REQUIREMENT

A. The Contractor shall furnish, test, install, and place in satisfactory operation the pressure indicating transmitters, with all spare parts, accessories, and appurtenances as herein specified and as shown on the Drawings.

1.02 RELATED WORK SPECIFIED ELSEWHERE

A. Section 17000, Instrumentation - General.

PART 2 - PRODUCTS

2.01 PRESSURE INDICATING TRANSMITTERS, GENERAL

A. Pressure indicating transmitters shall consist of a piezoresistive silicon pressure transducer with a process-isolated diaphragm, silicone oil fill, and microprocessor-based electronics. The pressure transducer shall be mechanically, electrically, and thermally isolated from the process and the environment, and shall have an integral temperature compensation sensor. Factory set correction coefficients and diagnostic data shall be stored in the transmitter's non-volatile memory, for correction and linearization of the output. Span and zero shall be continuously adjustable, externally, over the entire range. Span and zero adjustments shall be capable of being disabled internally. The maximum zero elevation and maximum zero suppression shall be adjustable to anywhere within sensor limits.

B. Provide a wall, pipe, or strut mounted 316 stainless steel (or aluminum) sunshield to protect the pressure indicating transmitter from direct sunlight.

C. Each transmitter shall be furnished with an integral LCD indicator capable of displaying engineering units and/or milliamps, and mounting hardware as required. Each transmitter shall have a stainless steel tag with calibration data attached to body. Transmitters shall satisfy the performance criteria in Table 1, below.

Table 1. Pressure Indicating Transmitter Performance Criteria	
Accuracy(1)	± 0.06% of calibrated span, zero-based

Table 1. Pressure Indicating Transmitter Performance Criteria	
Calibration Stability	± 0.15% of upper range limit (URL) over fifteen years
Field-Adjustable Rangeability	200:1 input range
Enclosure Type	NEMA 4X, Weather and Corrosion-Resistant
Enclosure Materials	Low-Copper Aluminum, with epoxy or powder coating
Process Wetted Materials	316 Stainless Steel, or better as scheduled or required for process compatibility
Ambient Environment Limits	-40 to 85 degrees Celsius at 0-100% relative humidity
Hazardous Environment Approval	Factory Mutual (FM) Approved for Class I, Division 1, Groups C and D
Overload Capacity	25 MPa (3,600 psi), or higher
Power Supply	24 VDC, two-wire design
Output	Linear isolated 4-20 mA 24 VDC with HART
Output Damping	Adjustable, 0-36 seconds

Notes:
(1) Including nonlinearity, hysteresis, and repeatability errors

2.02 GAUGE PRESSURE INDICATING TRANSMITTERS

A. Gauge pressure indicating transmitters shall satisfy all requirements of Article 2.01.

B. Where scheduled, gauge pressure indicating transmitters shall be calibrated in feet of liquid for liquid level service.

C. Where scheduled, gauge pressure indicating transmitters with ranges in inches water column (in. w.c.) shall achieve the scheduled range with a turndown ratio not to exceed 1:5. As an example, a gauge pressure indicating transmitter scheduled for 0-20” w.c. shall have an uncalibrated range of -50 to +50” w.c. or 0 to 100” w.c., or less.

D. Gauge pressure indicating transmitters shall be Emerson Process Management (Rosemount) Model 3051S1TG, or approved equal.

2.03 VALVE MANIFOLDS

A. Gauge and differential pressure indicating transmitters shall be furnished and installed with a valve manifold. Valve manifolds shall satisfy the criteria in Table 2, below.

Table 2. Valve Manifold Criteria	
Materials	316L Stainless Steel, or better to match transmitter wetted parts
Construction Type	Milled
Valve Type	Needle Valve with non-rotating plug, T-bar handle
Packing Material	Polytetrafluoroethylene (PTFE) (1)
Rated Pressure	4,000 psi at 200 degrees Celsius

Notes:
(1) Alternative packing materials shall be furnished as scheduled herein, shown on the drawings, and for applications where temperature may exceed 200 degrees Celsius

B. Dust caps shall be installed on all manifold connections during shipping, and remain installed until connection of the transmitter and process piping. Dust caps on vent and purge connections shall be 316 stainless steel, minimum.

C. All manifolds shall be configured to allow isolation, venting, removal, and calibration of the transmitter without disassembly of process piping.

D. Gauge pressure indicating transmitters shall be furnished with a two-valve manifold. Valve functions shall be isolate and vent. Two-valve manifolds shall be Ashcroft V02 Series, Hoke GP Series, or approved equal.

2.04 FLANGE MOUNTED LEVEL INDICATING TRANSMITTERS

A. Flange-mounted tank liquid level indicating transmitters shall satisfy all requirements of Article 2.01.

B. The flange-mounted sensor shall consist of a special non-corrosive isolating diaphragm with fill fluid in a sealed capillary system to transmit liquid pressure to the sensing element. A second isolating diaphragm shall transmit pressure through the fill fluid to the sensing diaphragm in the center of the capacitance cell. An isolating diaphragm and fluid fill shall also be provided on the opposite side of the sensing diaphragm to convey atmospheric or reference pressure.

C. All mounting flanges, diaphragms, O-rings and materials used in construction shall be non-corroding, compatible with each other, and compatible with the liquid being measured.

D. Flange-mounted liquid level transmitters shall be Emerson Process Management (Rosemount) Model 3051L, or approved equal.

2.05 REMOTE DISPLAYS

A. Where specified or indicated on the Drawings remote display units shall be furnished to display the pressure or level signal received from the pressure indicating transmitter 4-20mA output. Remote displays shall be powered from the same loop at the pressure transmitter.

B. Remote display units shall be wall mounted or mounted on a pipe stand fastened to a concrete base provided by the Contractor. Remote display units located outdoors in direct shall be protected with a sunshield.

C. Remote displays shall be Emerson Process Management (Rosemount) Model 751 Field Signal Indicator, or approved equal.

2.06 REMOTE SEALS

A. Remote seals shall be furnished with pressure indicating transmitters as shown on the Drawings. Remote seals shall be furnished and installed complete with capillary tubes, link kits, and fill fluid as required for a complete and functional installation.

B. Remote seals, link kits, and other appurtenances shall be manufactured by the pressure indicating transmitter manufacturer, and installed pursuant to all manufacturer's recommendations.

2.07 SURGE SUPRESSION

A. A dedicated 4-20mA signal surge suppression device shall be provided for and each pressure transmitter or remote display.

PART 3 - EXECUTION

3.01 REQUIREMENTS

A. Gauge pressure indicating transmitters shall be factory calibrated and a copy of the calibration report shall be in the O&M manual.

B. Install instruments in accordance with Section 17000, Instrumentation and Control – General.

C. Install instruments in strict accordance with the manufacturer's recommendations.

[END OF SECTION]

EJCDC
ENGINEERS JOINT CONTRACT DOCUMENTS COMMITTEE

NOTICE OF AWARD

Date of Issuance: **October 23, 2024**

Owner:	**City of Largo**	Owner's Contract No.:	**24-B-806**
Engineer:	**N/A**	Engineer's Project No.:	
Project:	**Trenchless Sanitary and Storm Sewer Rehabilitation Services**	Contract Name:	

Bidder: BLD Services, LLC

Bidder's Address: 2424 Tyler Street

Kenner, LA 70062

TO BIDDER:

You are notified that Owner has accepted your Bid dated July 31, 2024 for the above Contract, and that you are the Successful Bidder and are awarded a **Contract for: Trenchless Sanitary and Storm Sewer Rehabilitation Services,** which includes: **the rehabilitation of pipelines and conduit (8 inch through 84 inch and laterals) by various trenchless methods on an "as needed" basis; trenchless pipe rehabilitation work includes wastewater and stormwater pipe cleaning, inspection, grouting, and lining services. These rehabilitation methods may be used in a variety of gravity and pressure applications such as sanitary sewers, storm sewers, and force mains.**

The Contract Price of the awarded Contract is: $**1** (subject to unit prices). Work for this contract will be assigned on an as-needed basis in the form of a Task Order.

Owner**:** **City of Largo**

Norm Shaw

Authorized Signature

By: **Norm Shaw**

Title: **Construction manager**

Copy: Engineer

AGREEMENT
BETWEEN OWNER AND CONTRACTOR
FOR CONSTRUCTION CONTRACT (STIPULATED PRICE)

THIS AGREEMENT is by and between **City of Largo** ("Owner") and **BLD Services, LLC** ("Contractor").

Owner and Contractor hereby agree as follows:

ARTICLE 1 – WORK

1.01 Contractor shall complete all Work as specified or indicated in the Contract Documents. The Work is generally described as follows: **the rehabilitation of pipelines and conduits (8 inch through 84 inch, and laterals) by various trenchless methods on an "as needed" basis. The trenchless pipe rehabilitation work includes wastewater and stormwater pipe cleaning, inspection, grouting, and lining services. These rehabilitation methods may be used in a variety of gravity and pressure applications such as sanitary sewers, storm sewers, and force mains.**

This Work shall be assigned on a Task Order basis.

ARTICLE 2 – THE PROJECT

2.01 The Project, of which the Work under the Contract Documents is a part, is generally described as follows: **Trenchless Sanitary and Storm Sewer Rehabilitation Services Contract No. 24-B-806.**

ARTICLE 3 – ENGINEER

3.01 The part of the Project that pertains to the Work has been designed by the **City of Largo.**

3.02 Reference to ENGINEER in the Contract Documents shall be the OWNER, City of Largo Engineering Services Department. The OWNER will assume all duties and responsibilities, and will have the rights and authority assigned to Engineer in the Contract Documents in connection with the completion of the Work in accordance with the Contract Documents.

ARTICLE 4 – CONTRACT TIMES

4.01 *Time of the Essence*

A. All time limits for Milestones, if any, Substantial Completion, and completion and readiness for final payment as stated in the Contract Documents are of the essence of the Contract.

4.02 *Contract Times: Days*

A. The Work for each Task Order will be substantially completed within the amount of time set forth in each respective Task Order for substantial completion, after the Contract Times commence to run as provided in the respective Task Order. The Work will be completed and ready for final payment in accordance with Paragraph 15.06 of the General Conditions within the amount of time set forth in each respective Task Order for final completion, after the Contract Times commence to run as provided in the respective Task Order.

Copyright © 2013 National Society of Professional Engineers, American Council of Engineering Companies, and American Society of Civil Engineers. All rights reserved.

4.03 *Liquidated Damages*

A. Contractor and Owner recognize that time is of the essence as stated in Paragraph 4.01 above and that Owner will suffer financial and other losses if the Work is not completed and Milestones not achieved within the times specified in Paragraph 4.02 above, plus any extensions thereof allowed in accordance with the Contract. The parties also recognize the delays, expense, and difficulties involved in proving in a legal or arbitration proceeding the actual loss suffered by Owner if the Work is not completed on time. Accordingly, instead of requiring any such proof, Owner and Contractor agree that as liquidated damages for delay (but not as a penalty):

1. Substantial Completion: Contractor shall pay Owner $500 for each day that expires after the time (as duly adjusted pursuant to the Contract) specified in Paragraph 4.02.A above for Substantial Completion until the Work is substantially complete.

2. Completion of Remaining Work: After Substantial Completion, if Contractor shall neglect, refuse, or fail to complete the remaining Work within the Contract Times (as duly adjusted pursuant to the Contract) for completion and readiness for final payment, Contractor shall pay Owner $500 for each day that expires after such time until the Work is completed and ready for final payment.

3. Liquidated damages for failing to timely attain Substantial Completion and final completion are not additive and will not be imposed concurrently.

ARTICLE 5 – CONTRACT PRICE

5.01 Owner shall pay Contractor for completion of the Work in accordance with the Contract Documents the amounts that follow, subject to adjustment under the Contract:

A. For all Unit Price Work, an amount equal to the sum of the extended prices (established for each separately identified item of Unit Price Work by multiplying the unit price times the actual quantity of that item):

REMAINDER OF PAGE INTENTIONALLY LEFT BLANK

Copyright © 2013 National Society of Professional Engineers, American Council of Engineering Companies, and American Society of Civil Engineers. All rights reserved.

The extended prices for Unit Price Work set forth as of the Effective Date of the Contract are based on estimated quantities. As provided in Paragraph 13.03 of the General Conditions, estimated quantities are not guaranteed, and determinations of actual quantities and classifications are to be made by Owner.

ARTICLE 6 – PAYMENT PROCEDURES

6.01 *Submittal and Processing of Payments*

A. Contractor shall submit Applications for Payment in accordance with Article 15 of the General Conditions. Applications for Payment Shall be submitted to Norm Shaw, City of Largo Construction Manager, by the last calendar day of the month. Applications for Payment will be processed by Qwner as provided in the General Conditions. All payments shall be applied for and paid in accordance with the Florida Prompt Payment Act, as set forth in chapter 218, Florida Statutes.

6.02 *Progress Payments; Retainage*

A. Owner shall make progress payments on account of the Task Order Price on the basis of Contractor's Applications for Payment in accordance with section 218.735, Florida Statutes (2018), during performance of the Work as provided in Paragraph 6.02.A.1 below, provided that such Applications for Payment have been submitted in a timely manner and otherwise meet the requirements of the Contract. All such payments will be measured by the Schedule of Values established as provided in the General Conditions (and in the case of Unit Price Work based on the number of units completed) or, in the event there is no Schedule of Values, as provided elsewhere in the Contract.

1. Prior to Substantial Completion, progress payments will be made in an amount equal to the percentage indicated below but, in each case, less the aggregate of payments previously made and less such amounts as Owner may withhold, including but not limited to liquidated damages, in accordance with the Contract

a. **95** percent of Work completed (with the balance being retainage) for the duration of the Project.

b. Upon Substantial Completion, Contractor may request release of retainage, which will not be unreasonably withheld by the Owner.

6.03 *Final Payment*

A. Upon final completion and acceptance of the Work in accordance with Paragraph 15.06 of the General Conditions, Owner shall pay the remainder of the Task Order Price as recommended by OSR as provided in said Paragraph 15.06.

ARTICLE 7 – INTEREST

7.01 All amounts not paid when due shall bear interest at the rate of one percent per annum.

ARTICLE 8 – CONTRACTOR'S REPRESENTATIONS

8.01 In order to induce Owner to enter into this Contract, Contractor makes the following representations:

A. Contractor has examined and carefully studied the Contract Documents, and any data and reference items identified in the Contract Documents.

Copyright © 2013 National Society of Professional Engineers, American Council of Engineering Companies, and American Society of Civil Engineers. All rights reserved.

B. For each Task Order, Contractor shall visit the Site, conduct a thorough, alert visual examination of the Site and adjacent areas, and become familiar with and satisfied as to the general, local, and Site conditions that may affect cost, progress, and performance of the Work.

C. Contractor is familiar with and is satisfied as to all Laws and Regulations that may affect cost, progress, and performance of the Work.

D. For each Task Order, Contractor shall carefully study all: (1) reports of explorations and tests of subsurface conditions at or adjacent to the Site and all drawings of physical conditions relating to existing surface or subsurface structures at the Site that have been identified in the Supplementary Conditions, especially with respect to Technical Data in such reports and drawings, and (2) reports and drawings relating to Hazardous Environmental Conditions, if any, at or adjacent to the Site that have been identified in the Supplementary Conditions, especially with respect to Technical Data in such reports and drawings.

E. For each Task Order, Contractor shall consider the information known to Contractor itself; information commonly known to contractors doing business in the locality of the Site; information and observations obtained from visits to the Site; the Contract Documents; and the Site-related reports and drawings identified in the Contract Documents, with respect to the effect of such information, observations, and documents on (1) the cost, progress, and performance of the Work; (2) the means, methods, techniques, sequences, and procedures of construction to be employed by Contractor; and (3) Contractor's safety precautions and programs.

F. Based on the information and observations referred to in the preceding paragraph, Contractor shall satisfy itself that no further examinations, investigations, explorations, tests, studies, or data are necessary for the performance of the Work at the Contract Price, within the Contract Times, and in accordance with the other terms and conditions of the Contract.

G. For each Task Order, Contractor shall be aware of the general nature of work to be performed by Owner and others at the Site that relates to the Work as indicated in the Contract Documents.

H. Contractor has given Owner written notice of all conflicts, errors, ambiguities, or discrepancies that Contractor has discovered in the Contract Documents, and the written resolution thereof by Owner is acceptable to Contractor.

I. The Contract Documents are generally sufficient to indicate and convey understanding of all terms and conditions for performance and furnishing of the Work.

J. Contractor's entry into this Contract constitutes an incontrovertible representation by Contractor that without exception all prices in the Agreement are premised upon performing and furnishing the Work required by the Contract Documents.

ARTICLE 9 – CONTRACT DOCUMENTS

9.01 *Contents*

A. The Contract Documents consist of the following:

1. This Agreement.

2. General Conditions.

Copyright © 2013 National Society of Professional Engineers, American Council of Engineering Companies, and American Society of Civil Engineers. All rights reserved.

3. Supplementary Conditions.

4. Specifications as listed in the table of contents of the Project Manual.

5. Addenda.

6. Exhibits to this Agreement (enumerated as follows):

    a. Contractor's Bid.

    b. Insurance Certificates.

7. The following which may be delivered or issued on or after the Effective Date of the Contract and are not attached hereto:

    a. Task Orders.

    b. Work Change Directives.

    c. Change Orders.

    d. Field Orders.

B. There are no Contract Documents other than those listed above in this Article 9.

C. The Contract Documents may only be amended, modified, or supplemented as provided in the General Conditions. In interpreting this Agreement and resolving any ambiguities or conflicts amongst the Contract Documents, this Agreement takes precedence over the other Contract Documents and any inconsistency between remaining Contract Documents will be resolved in the following order:

1. Specifications

2. Addenda

3. Supplementary Conditions

4. General Conditions

ARTICLE 10 – MISCELLANEOUS

10.01 *Terms*

A. Terms used in this Agreement will have the meanings stated in the General Conditions and the Supplementary Conditions.

10.02 *Assignment of Contract*

A. Unless expressly agreed to elsewhere in the Contract, no assignment by a party hereto of any rights under or interests in the Contract will be binding on another party hereto without the written consent of the party sought to be bound; and, specifically but without limitation, money that may become due and money that is due may not be assigned without such consent (except to the extent that the effect of this restriction may be limited by law), and unless specifically stated to the contrary in any written consent to an assignment, no assignment will release or discharge the assignor from any duty or responsibility under the Contract Documents.

10.03 *Successors and Assigns*

A. Owner and Contractor each binds itself, its successors, assigns, and legal representatives to the other party hereto, its successors, assigns, and legal representatives in respect to all covenants, agreements, and obligations contained in the Contract Documents.

Copyright © 2013 National Society of Professional Engineers, American Council of Engineering Companies, and American Society of Civil Engineers. All rights reserved.

10.04 *Severability*

A. Any provision or part of the Contract Documents held to be void or unenforceable under any Law or Regulation shall be deemed stricken, and all remaining provisions shall continue to be valid and binding upon Owner and Contractor, who agree that the Contract Documents shall be reformed to replace such stricken provision or part thereof with a valid and enforceable provision that comes as close as possible to expressing the intention of the stricken provision.

10.05 *Contractor's Certifications*

A. Contractor certifies that it has not engaged in corrupt, fraudulent, collusive, or coercive practices in competing for or in executing the Contract. For the purposes of this Paragraph 10.05:

1. "corrupt practice" means the offering, giving, receiving, or soliciting of any thing of value likely to influence the action of a public official in the bidding process or in the Contract execution;

2. "fraudulent practice" means an intentional misrepresentation of facts made (a) to influence the bidding process or the execution of the Contract to the detriment of Owner, (b) to establish Bid or Contract prices at artificial non-competitive levels, or (c) to deprive Owner of the benefits of free and open competition;

3. "collusive practice" means a scheme or arrangement between two or more Bidders, with or without the knowledge of Owner, a purpose of which is to establish Bid prices at artificial, non-competitive levels; and

4. "coercive practice" means harming or threatening to harm, directly or indirectly, persons or their property to influence their participation in the bidding process or affect the execution of the Contract.

10.06 *Other Provisions*

A. Owner stipulates that if the General Conditions that are made a part of this Contract are based on EJCDC® C-700, Standard General Conditions for the Construction Contract, published by the Engineers Joint Contract Documents Committee®, and if Owner is the party that has furnished said General Conditions, then Owner has plainly shown all modifications to the standard wording of such published document to the Contractor, through a process such as highlighting or "track changes" (redline/strikeout), or in the Supplementary Conditions.

Copyright © 2013 National Society of Professional Engineers, American Council of Engineering Companies, and American Society of Civil Engineers. All rights reserved.

IN WITNESS WHEREOF, Owner and Contractor have signed this Agreement.

This Agreement will be effective on _____ (which is the Effective Date of the Contract).

OWNER:	CONTRACTOR:
City of Largo	BLD Services, LLC
By:	By:
Title: John P. Curp, City Manager	Title:
	(If Contractor is a corporation, a partnership, or a joint venture, attach evidence of authority to sign.)
Attest:	Attest:
Title: Diane L. Bruner, City Clerk	Title:

Reviewed and Approved:

City Attorney

Address for giving notices:	Address for giving notices:
John Curp, City Manager	BLD Services, LLC
201 Highland Avenue NE	2424 Tyler Street
Largo, FL 33770	Kenner, LA 70062

With required copy to:
Alan S. Zimmet, Esq.
Bryant Miller Olive, P.A.
One Tampa City Center, Suite 2700
Tampa, Florida 33602

License No: CUC057224

Copyright © 2013 National Society of Professional Engineers, American Council of Engineering Companies, and American Society of Civil Engineers. All rights reserved.

Detail by Entity Name

Foreign Limited Liability Company
BLD SERVICES LLC

Filing Information

Document Number	M08000005285
FEI/EIN Number	72-1512625
Date Filed	12/04/2008
State	LA
Status	ACTIVE
Last Event	LC STMNT OF RA/RO CHG
Event Date Filed	11/05/2015
Event Effective Date	NONE

Principal Address

2424 TYLER STREET
KENNER, LA 70062

Changed: 11/16/2009

Mailing Address

2424 TYLER STREET
KENNER, LA 70062

Changed: 11/16/2009

Registered Agent Name & Address

CORPORATION SERVICE COMPANY
1201 HAYS STREET
TALLAHASSEE, FL 32301

Name Changed: 11/05/2015

Address Changed: 02/13/2024

Authorized Person(s) Detail

Name & Address

Title Managing Member

WAGNER, DANIEL P, III
2424 TYLER STREET
KENNER, LA 70062

Title Managing Member

TRAPANI, JACOB
2424 TYLER STREET
KENNER, LA 70062

Title Managing Member

WAGNER, SHIRLEY JARRELL
2424 TYLER STREET
KENNER, LA 70062

Annual Reports

Report Year	Filed Date
2022	04/21/2022
2023	02/23/2023
2024	02/13/2024

Document Images

02/13/2024 -- ANNUAL REPORT	View image in PDF format
02/23/2023 -- ANNUAL REPORT	View image in PDF format
04/21/2022 -- ANNUAL REPORT	View image in PDF format
04/20/2021 -- ANNUAL REPORT	View image in PDF format
02/05/2020 -- ANNUAL REPORT	View image in PDF format
01/25/2019 -- ANNUAL REPORT	View image in PDF format
03/29/2018 -- ANNUAL REPORT	View image in PDF format
01/24/2017 -- ANNUAL REPORT	View image in PDF format
02/11/2016 -- ANNUAL REPORT	View image in PDF format
11/05/2015 -- CORLCRACHG	View image in PDF format
02/09/2015 -- ANNUAL REPORT	View image in PDF format
02/07/2014 -- ANNUAL REPORT	View image in PDF format
01/25/2013 -- ANNUAL REPORT	View image in PDF format
01/19/2012 -- ANNUAL REPORT	View image in PDF format
02/16/2011 -- ANNUAL REPORT	View image in PDF format
08/18/2010 -- ANNUAL REPORT	View image in PDF format
01/05/2010 -- ANNUAL REPORT	View image in PDF format
11/16/2009 -- ANNUAL REPORT	View image in PDF format
06/23/2009 -- ANNUAL REPORT	View image in PDF format
12/04/2008 -- Foreign Limited	View image in PDF format

EXHIBIT A

Bidder will complete the Work for the following prices:

SCHEDULE OF BID PRICES

Bid Number	Bid Item	Quantity	Unit	Unit Cost	Total Cost
Group 1	**Cured-In-Place Pipe (CIPP) Main Line Lining**				
1	8 in. x 6 mm CIPP	17,500	LF	N/A	N/A
2	Cost for each 1.5 mm Increase in Thickness of 8 in. Liner	7,500	LF	N/A	N/A
3	10 in. x 6 mm CIPP	3,750	LF	N/A	N/A
4	Cost for each 1.5 mm Increase in Thickness of 10 in. Liner	2,500	LF	N/A	N/A
5	12 in. x 6 mm CIPP	1,250	LF	N/A	N/A
6	Cost for each 1.5 mm Increase in Thickness of 12 in. Liner	750	LF	N/A	N/A
7	15 in. x 6 mm CIPP	500	LF	N/A	N/A
8	Cost for each 1.5 mm Increase in Thickness of 15 in. Liner	250	LF	N/A	N/A
9	18 in. x 6 mm CIPP	500	LF	N/A	N/A
10	Cost for each 1.5 mm Increase in Thickness of 18 in. Liner	250	LF	N/A	N/A
11	21 in. x 7.5 mm CIPP	125	LF	N/A	N/A
12	Cost for each 1.5 mm Increase in Thickness of 21 in. Liner	75	LF	N/A	N/A
13	24 in. x 7.5 mm CIPP	250	LF	N/A	N/A
14	Cost for each 1.5 mm Increase in Thickness of 24 in. Liner	125	LF	N/A	N/A
15	30 in. x 9 mm CIPP	250	LF	N/A	N/A
16	Cost for each 1.5 mm Increase in Thickness of 30 in. Liner	125	LF	N/A	N/A
17	36 in. x 10.5 mm CIPP	250	LF	N/A	N/A
18	Cost for each 1.5 mm Increase in Thickness of 36 in. Liner	125	LF	N/A	N/A
19	42 in. x 10.5 mm CIPP	200	LF	N/A	N/A
20	Cost for each 1.5 mm Increase in Thickness of 42 in. Liner	100	LF	N/A	N/A
21	48 in. x 12 mm CIPP	200	LF	N/A	N/A
22	Cost for each 1.5 mm Increase in Thickness of 48 in. Liner	100	LF	N/A	N/A
23	54 in. x 12 mm CIPP	150	LF	N/A	N/A
24	Cost for each 1.5 mm Increase in Thickness of 54 in. Liner	100	LF	N/A	N/A
25	60 in. x 12 mm CIPP	150	LF	N/A	N/A
26	Cost for each 1.5 mm Increase in Thickness of 60 in. Liner	100	LF	N/A	N/A
27	72 in. x 12 mm CIPP	150	LF	N/A	N/A
28	Cost for each 1.5 mm Increase in Thickness of 72 in. Liner	100	LF	N/A	N/A
29	84 in. x 12 mm CIPP	100	LF	N/A	N/A
30	Cost for each 1.5 mm Increase in Thickness of 84 in. Liner	75	LF	N/A	N/A
	Group 1 Total Bid:			N/A	

SCHEDULE OF BID PRICES

Bid Number	Bid Item	Quantity	Unit	Unit Cost	Total Cost
Group 2	**Cured-In-Place Pipe (CIPP) Service Lateral Lining**				
31	Initial Service Lateral CCTV Inspection (4″-6″) From Main, Up To 30 LF	250	EA	475.00	118,750.00
32	Initial Service Lateral CCTV Inspection (4″-6″), From Main, Per LF, Beyond Initial 30 Ft.	2,500	LF	1.00	2,500.00
33	Initial Service Lateral CCTV Inspection (4″-6″) From Clean Out, Up To 30 LF	100	EA	100.00	10,000.00
34	Initial Service Lateral CCTV Inspection (4″-6″) From Clean Out, Per LF, Beyond Initial 30 Ft.	1,250	LF	0.50	625.00
35	CIPP Lateral Liner, 4″ - 6″ Dia. Up To 30 LF, with Main/Lateral Connection System	125	EA	3,950.00	493,750.00
36	CIPP Lateral Liner, 4″ -6″ Dia. Per LF Beyond Initial 30 Ft.	1,875	LF	5.00	9,375.00
37	Clean-Out Installation in Grass Area (Up to 5 ft. in depth)	50	EA	1,830.00	91,500.00
38	Clean-Out Installation in Asphalt Area (Up to 5 ft. in depth)	5	EA	2,190.00	10,950.00
39	Clean-Out Installation in Concrete Area (Up to 5 ft. in depth)	50	EA	2,190.00	109,500.00
40	Clean-Out Installation (Beyond 5 ft. in depth)	75	VF	25.00	1,875.00
	Group 2 Total Bid:				$848,825.00
Group 3	**Joint Sealing with Chemical Grout**				
41	Test Joint - 8″ Dia.	1,500	EA	N/A	N/A
42	Test Joint - 10″ Dia.	500	EA	N/A	N/A
43	Test Joint – 12″ Dia.	500	EA	N/A	N/A
44	Grout Seal Failed Joints – 8″ Dia	1,000	EA	N/A	N/A
45	Grout Seal Failed Joints – 10″ Dia	375	EA	N/A	N/A
46	Grout Seal Failed Joints – 12″ Dia	375	EA	N/A	N/A
47	Seal Service Lateral Connections	125	EA	N/A	N/A
	Group 3 Total Bid:				N/A
Group 4	**Common Work Tasks**				
48	Mobilization, </= 1,200 LF or </= 10 Lateral Liners per Task Order	5	EA	5,000.00	25,000.00
49	Mobilization, > 1,200 LF or > 10 Lateral Liners per Task Order	10	EA	2,500.00	25,000.00
50	Maintenance of Traffic, FDOT	5	DAY	1,800.00	9,000.00
51	Maintenance of Traffic, City/County Arterial/Collector	15	DAY	1,800.00	27,000.00
52	Maintenance of Traffic, City/County Minor/Residential	25	DAY	1,800.00	45,000.00
53	Work in Rear Easements and/or Away From Travelways	15	EA	1,500.00	22,500.00
54	Specialty Cleaning, 8″ Dia. (Groups 1, and 2)	250	LF	18.00	4,500.00
55	Specialty Cleaning, 10″- 18″ Dia. (Groups 1, and 2)	250	LF	25.00	6,250.00
56	Specialty Cleaning, 24″-36″ Dia. (Group 1 Only)	150	LF	N/A	N/A
57	Specialty Cleaning, 42″-54″ Dia. (Group 1 Only)	150	LF	N/A	N/A

SCHEDULE OF BID PRICES

Bid Number	Bid Item	Quantity	Unit	Unit Cost	Total Cost
58	Specialty Cleaning, 60″-84″ Dia. (Group 1 Only)	100	LF	N/A	N/A
59	Hammer Tap Removal	5	EA	N/A	N/A
60	Lateral Reinstatement and Grouting (Groups 1, and 2)	250	EA	250.00	62,500.00
61	Warranty Cleaning and CCTV Inspection	7,500	LF	N/A	N/A
	Group 4 Total Bid:				$226,750.00

Grand Total: **$1,075,575.00**

Sponsored by: Interim City Manager

RESOLUTION NO. _____

A RESOLUTION OF THE CITY COMMISSION OF THE CITY OF OPA-LOCKA, FLORIDA, AUTHORIZING THE INTERIM CITY MANAGER TO ENTER INTO AN AGREEMENT WITH SSN ENGINEERING, LLC FOR SANITARY SEWER COLLECTION SYSTEM HYDRAULIC MODELING SERVICES, PURSUANT TO RFQ NO. 24-1011200, ATTACHED HERETO, IN AN AMOUNT NOT TO EXCEED ONE HUNDRED TWENTY-FOUR THOUSAND DOLLARS ($124,000.00); PROVIDING FOR INCORPORATION OF RECITALS; PROVIDING FOR AN EFFECTIVE DATE.

WHEREAS, pursuant to Resolution No. 24-106, the City Commission of the City of Opa-Locka authorized the Interim City Manager to accept the proposal of SSN Engineering, LLC ("SSN Engineering"), in relation to RFQ No. 24-1011200 for Sanitary Sewer Collection System Hydraulic Modeling and negotiate pricing for services; and

WHEREAS, accordingly, City Administration entered into negotiations with SSN Engineering and was presented a formal proposal for the services; and

WHEREAS, after careful consideration, City Administration recommends the acceptance of SSN Engineering's proposal and entering into an agreement with SSN Engineering, LLC. for Sanitary Sewer Collection System Hydraulic Modeling; and

WHEREAS, the City Commission finds that it is in the best interest of the City and its residents to enter into an agreement with SSN Engineering, LLC. for Sanitary Sewer Collection System Hydraulic Modeling Services, attached hereto as Exhibit "A", in an amount not to exceed One Hundred Twenty-Four Thousand Dollars ($124,000.00).

NOW THEREFORE, BE IT RESOLVED BY THE CITY COMMISSION OF THE CITY OF OPA LOCKA, FLORIDA:

SECTION 1. RECITALS ADOPTED.
The recitals to the preamble herein are incorporated by reference.

SECTION 2. AUTHORIZATION
The City Commission of the City of Opa-Locka hereby authorizes the Interim City Manager to enter into an agreement with SSN Engineering, LLC. for Sanitary Sewer Collection System Hydraulic Modeling Services, attached hereto as Exhibit "A", in an amount not to exceed One Hundred Twenty-Four Thousand Dollars ($124,000.00).

SECTION 3. SCRIVENER'S ERRORS.
Sections of this Resolution may be renumbered or re-lettered and corrections of typographical errors which do not affect the intent may be authorized by the Interim City Manager, following review by the City Attorney and without need of public hearing, by filing a corrected copy of same with the City Clerk.

SECTION 4. EFFECTIVE DATE.
This Resolution shall be effective immediately upon adoption hereof and approval by the Governor of the State of Florida or Governor's designee.

PASSED and **ADOPTED** this _____ day of _____, 2024.

_____
John Taylor, Mayor

ATTEST:

_____
Joanna Flores, City Clerk

APPROVED AS TO FORM
AND LEGAL SUFFICIENCY:

_____
Burnadette Norris-Weeks, P.A.
City Attorney

Moved by: _____

Seconded by: _____

VOTE:
Commissioner Bass _____
Commissioner Santiago _____
Commissioner Ervin _____
Vice Mayor Kelley _____
Mayor Taylor _____

City of Opa-locka
Agenda Cover Memo

Interim City Manager:	Sha'mecca Lawson			**ICM Signature:**			
Commission Meeting Date:	12.11.2024		**Item Type:** *(Enter X in box)*	**Resolution**	**Ordinance**		**Other**
				X			
Fiscal Impact: *(Enter X in box)*	**Yes**	**No**	**Ordinance Reading:** *(Enter X in box)*		**1st Reading**		**2nd Reading**
	X		**Public Hearing:** *(Enter X in box)*		**Yes**	**No**	**Yes**	**No**
						X		**X**
Funding Source: *Account#* **:**	*(Enter Fund & Dept)* Ex: See Financial Impact Section		**Advertising Requirement:** *(Enter X in box)*		**Yes**		**No**
							X
Contract/P.O. Required: *(Enter X in box)*	**Yes**	**No**	**RFP/RFQ/Bid#:**				
		X	**No. 24-1011200**				
Strategic Plan Related *(Enter X in box)*	**Yes**	**No**	**Strategic Plan Priority Area:**		**Strategic Plan Obj./Strategy:** *(list the specific objective/strategy this item will address)*		
	X		**Enhance Organizational** ■ **Bus. & Economic Dev** ☐ **Public Safety** ☐ **Quality of Education** ☐ **Qual. of Life & City Image** ☐ **Communication** ☐				
Sponsor Name	Interim City Manager		**Department:**		City Manager		

Short Title:

A RESOLUTION AUTHORIZING THE INTERIM CITY MANAGER TO ACCEPT THE PROPOSAL OF SSN ENGINEERING LLC FOR SANITARY SEWER COLLECTION SYSTEM HYDRAULIC MODELING PURSUANT TO RFQ NO. 24-1011200 AND FURTHER AUTHORIZING THE INTERIM CITY MANAGER TO ENTER INTO AN AGREEMENT WITH SSN ENGINEERING, LLC FOR SAID SERVICES.

Staff Summary:

The City Commission approved Resolution No. 24-163, authorizing the Interim City Manager to accept SSN Engineering's bid proposal and negotiate pricing in relation to RFQ No. 24-1011200 for Sanitary Sewer Collection System Hydraulic Modeling. City Administration entered into negotiations with SSN Engineering and was presented a formal proposal for these services.

After careful consideration, City Administration desires to accept the proposal and enter into an agreement with SSN Engineering, LLC. for Sanitary Sewer Collection System Hydraulic Modeling.

SSN Engineering, LLC, offers a proven track record of recent and specialized experience that aligns closely with our current needs. The SSN Engineering team is familiar with the local codes and design guidelines for city, county, drainage districts, water, and wastewater districts, FDOT, FDEP, and any other applicable agencies, to provide design and engineering services that will meet the City's requirements. SSN Engineering, LLC (SSN), founded in Florida in 2011, is a CBE/DBE/SBE certified firm and is proud to be a company focused on public services throughout the past 13 years with 20+ years of experience of the SSN professionals. SSN has an office within a few miles of the City of Opa-locka, which makes them a unique firm for faster communication with City staff. The firm has also completed projects for the Cities of Margate, Tamarac and Sunrise. The budgeted allocation is $150,000.

Financial Impact: Sewer modeling is included in the FY 25 adopted budget with an allocation of $150,000 under account 86-5356420 (Water-Sewer CIP), funded through ARPA. The proposed contract with SSN Engineering, LLC, is set at a maximum of $124,000, remaining within the City's budgeted amount. This project is not anticipated to have any ongoing or long-term impact on the Fund Balance.

Proposed Action:

Staff recommend the City Commission approve the recommendation for SSN Engineering, LLC and authorize the Interim City Manager to enter into an agreement.

Attachment:

Proposal-SSN Engineering, LLC

AGREEMENT

THIS IS AN AGREEMENT, dated the __ day of _____, 2024, between:

CITY OF OPA-LOCKA,
a Florida municipal corporation, hereinafter "CITY,"

and

SSN ENGINEERING, LLC.

a for Profit Company, authorized to do business in the State of Florida, hereinafter "CONTRACTOR."

WITNESSETH:

In consideration of the mutual terms and condition, promises, covenants, and payments hereinafter set forth, CITY and CONTRACTOR agree as follows:

ARTICLE 1
PREAMBLE

The City of Opa-locka and Contractor desire to enter into a professional services agreement for CONTRACTOR to prepare a comprehensive Sanitary Sewer Collection System Hydraulic Modeling update for the entire sewer system network within the City limit.

In order to establish the background, context and for of reference for this Agreement and to generally express the objectives, and intentions, of the respective parties herein, the following statements, representations and explanations shall be accepted as predicates for the undertakings and commitments included within the provisions which follow and may be relied upon by the parties as essential elements of the mutual considerations upon which this Agreement is based.

1.1 CITY requested qualifications for services consistent with the CITY's desire to hire a Contractor to perform Sanitary Sewer Collection System Hydraulic Modeling Services through Request for Qualifications #24-1011200.

1.2 On _____ at a Regular Meeting of the City Commission, the CITY awarded the CONTRACT and authorized the proper CITY officials to enter into an agreement with CONTRACTOR to render the services more particularly described herein below.

ARTICLE 2
SCOPE OF WORK

2.1 The CONTRACTOR shall furnish all of the materials, tools, supplies, and labor necessary to perform all of the work described in Contractor's proposal for services, a copy of which is attached hereto and specifically made a part of this Agreement as Exhibit "A".

Further, the Scope of Work for Contractor shall be consistent with Section 2-1 of the Request for Qualifications #24-1011200, entitled "*Purpose and Scope of Work*" as outlined and unless specifically omitted below:

Scope of Work

The selected individual or CONTRACTOR shall be expected to perform the services required under the Request for Qualifications in the most expeditious manner possible. The scope should include the following, but is not limited to:

- Visit all properties in the City of Opa-locka's sewer service area potentially connected to the City's sewer service as identified from the Miami-Dade County Property Appraisal or information and other sources. Establish a new sewer estimated flow from the occupant of each property.
- Collect sewer flow data from Miami-Dade County. Collect concurrent water bill data from the City of Opa-locka. Collect concurrent rainfall data from South Florida Water Management District (SFWMD) and the City of Opa-locka.
- Insert the data from task-1 and task-2 into the Calibration Model and validate the Calibration Model by adjusting the variables.
- Establish two (2) dry flow models and three (3) wet flow models.
- Perform the relative analysis from the dry and wet flow models from task 4.
- Update the report with new data, models, analysis, and recommend

2.2 SEWER HYDRAULIC MODELING: The Firm shall use XP-SWMM to update the existing Model. Miami-Dade County except for the model platform in XP- SWMM or Info Works. Using flow data collected from the City data and field investigations, the CONTRACTOR shall also update the existing calibration hydraulic flow model of the City's sewer collection system. CONTRACTOR shall identify the seasonal or daily variation of the flow as well.

2.3 The CONTRACTOR shall manage the assigned projects and tasks, carefully control costs and resources, and complete the project work on schedule. The Professional Engineer of Record shall be the project manager who shall act as the City's primary contact and shall be responsible for the work (including sub-consultant work if

applicable). To ensure the project remains on schedule, the following project management activities shall be performed:

> The CONTRACTOR shall review the scope of services with City staff and review relevant studies including, but not limited to, the existing/proposed sanitary sewer master plan and the City's Comprehensive Plan. Contractor shall meet with City staff to collect information that is vital for this project and evaluate the existing sewer collection system to determine areas of deficiency.

2.4 Deliverables: The CONTRACTOR will prepare an updated comprehensive written report describing the work performed, findings, and recommendations to the City of Opa-locka and Miami-Dade County.

2.5 CONTRACTOR hereby represents to CITY, with full knowledge that CITY is relying upon these representations when entering into this Agreement with CONTRACTOR, that CONTRACTOR has the professional expertise, experience and manpower to perform the services to be provided by CONTRACTOR pursuant to the terms of this Agreement.

ARTICLE 3
TIME FOR COMPLETION

3.1 The CONTRACTOR shall commence work to be performed under this Agreement beginning at the time this Agreement is executed by the Interim City Manager. CONTRACTOR shall complete all work in a timely manner and work together with CITY on a reasonable timetable and priority for work to be performed.

3.2 CITY agrees to reasonably work together with CONTRACTOR to facilitate the completion of timetables and promptly provide information to CONTRACTOR as necessary.

ARTICLE 4
CONTRACT SUM

4.1 The CITY hereby agrees to pay CONTRACTOR for the faithful performance of this Agreement, for work related to this Agreement the amount of One Hundred Twenty-Four Thousand Dollars ($124,000.00).

4.2 The making and acceptance of the final payment shall constitute a waiver of all claims by CONTRACTOR except those previously made and still unsettled.

ARTICLE 5
CONTRACTOR'S LIABILITY INSURANCE

5.1 The CONTRACTOR shall not commence work under this contract until it has obtained all insurance required under this Article.

5.2 CONTRACTOR shall maintain insurance coverage reflecting at least the minimum amounts and conditions specified herein. Evidence of General Liability coverage shall be maintained with limits not less than $1,000,000 per Occurrence/ $2,000,000 Aggregate (Including Policy Number and Policy Period).

5.3 Evidence of Auto Liability coverage with limits not less than $1,000,000 per Occurrence /$1,000,000 Aggregate (Including Policy Number and Policy Period).

5.4 Evidence of Workers' Compensation coverage with statutory limits and Employer's Liability coverage with limits not less than $100,000 (Including Policy Number and Policy Period), if applicable.

5.5 The City shall be listed as an additional insured (this may be specifically limited to the specific job(s) the contractor will be performing).

5.6 Minimum 30-day written notice of cancellation.

ARTICLE 6
PROTECTION OF PROPERTY

6.1 At all times during the performance of this Contract, the CONTRACTOR shall protect the CITY's property from all damage whatsoever.

ARTICLE 7
CONTRACTOR'S INDEMNIFICATION

7.1 The CONTRACTOR agrees to release the CITY from and against any and all liability and responsibility in connection with the above-mentioned matters. The CONTRACTOR further agrees not to sue or seek any money or damages from CITY in connection with the above mentioned matters.

7.2 The CONTRACTOR agrees to indemnify and hold harmless the CITY, its trustees, elected and appointed officers, agents, servants and employees, from and against any and all claims, demands, or causes of action of whatsoever kind or nature and the resulting losses, costs, expenses, reasonable attorneys' fees, liabilities, damages, orders, judgments, or decrees, sustained by the CITY or any third party arising out of, or by reason of, or resulting

from the CONTRACTOR's negligent acts, errors, or omissions.

7.3 If a court of competent jurisdiction holds the City liable for certain tortuous acts of its agents, officers, or employees, such liability shall be limited to the extent and limit provided in 768.28, Florida Statutes. This provision shall not be construed as a waiver of any right or defense that the City may possess. The City specifically reserves all rights as against any and all claims that may be brought.

ARTICLE 8
INDEPENDENT CONTRACTOR

8.1 This Agreement does not create an employee/employer relationship between the parties. It is the intent of the parties that the CONTRACTOR is an independent contractor under this Agreement and not the CITY's employee for any purposes, including but not limited to, the application of the Fair Labor Standards Act minimum wage and overtime payments, Federal Insurance Contribution Act, the Social Security Act, the Federal Unemployment Tax Act, the provisions of the Internal Revenue Code, the State Workers Compensation Act and the State unemployment insurance law and similar laws. The CONTRACTOR shall retain sole and absolute discretion in the judgment of the manner and means of carrying out the CONTRACTOR's activities and responsibilities hereunder provided. This Agreement shall not be construed as creating any joint employment relationship between the CONTRACTOR and the CITY and the CITY will not be liable for any obligation incurred by CONTRACTOR, including but not limited to unpaid minimum wages and/or overtime premiums.

ARTICLE 9
CHANGES TO SCOPE OF WORK AND ADDITIONAL WORK

9.1 CITY or CONTRACTOR may request changes that would increase decrease or otherwise modify the Scope of Services/Basic Services to be provided under this Agreement as described in Article 2 of this Agreement. Such changes or additional services must be in accordance with the provisions of the Code of Ordinances of the CITY and must be contained in a written amendment, executed by the parties hereto, with the same formality and with equality and dignity prior to any deviation from the terms of this Agreement, including the initiation of any additional or extra work. Each amendment shall at a minimum include the following information on each project:

PROJECT NAME
PROJECT DESCRIPTION
ESTIMATED PROJECT COST
ESTIMATED COST FOR ADDITION OR CHANGE TO PROJECT CONTRACT

ESTIMATED PROJECT COMPLETION DATE

9.2 In no event will the CONTRACTOR be compensated for any work which has not been described in a separate written agreement executed by the parties hereto.

ARTICLE 10
TERM AND TERMINATION

10.1 The term of this Agreement shall be for a one (1) year fiscal year period with one (1) one (1) year options for renewal. Agreement may be terminated by City with cause in the event that the CONTRACTOR abandons or is in material breach of this Agreement.

All finished or unfinished documents, data, studies, plans, surveys, and reports prepared by CONTRACTOR shall become the property of CITY and shall be delivered by CONTRACTOR to CITY.

10.2 This Agreement shall take effect as of the date of execution is to take place and as is contemplated by the Agreement.

ARTICLE 11
CONTRACT DOCUMENTS

11.1 CONTRACTOR and CITY hereby agree that the following Specification and Contract Documents, which are attached hereto and made a part thereof, are fully incorporated herein and made a part of this Agreement, as if written herein word for word. Unless otherwise provided, this Agreement shall take precedence over any other document. Attachments to this Agreement are CONTRACTOR's Response to Request for Qualifications as set forth in Exhibit "A" and CITY's Request for Qualifications as Exhibit "B".

ARTICLE 12
MISCELLANEOUS

12.1 Legal Representation. It is acknowledged that each party to this Agreement had the opportunity to be represented by counsel in the preparation of this Agreement and, accordingly, the rule that a contract shall be interpreted strictly against the party preparing same shall not apply due to the joint contribution of both parties.

12.2 Assignments. This Agreement, or any interest herein, shall not be assigned, transferred or otherwise encumbered, under any circumstances, by CONTRACTOR without the prior written consent of CITY. For purposes of this Agreement, any change of

ownership of CONTRACTOR shall constitute an assignment which requires CITY approval. However, this Agreement shall run to the CITY and its successors and assigns.

12.3 Records. CONTRACTOR shall keep books and records and require any and all subcontractors to keep books and records as may be necessary in order to record complete and correct entries as to personnel hours charged to this engagement, and any expenses for which CONTRACTOR expects to be reimbursed, if applicable. Such books and records will be available at all reasonable times for examination and audit by CITY and shall be kept for a period of three (3) years after the completion of all work to be performed pursuant to this Agreement. Incomplete or incorrect entries in such books and records will be grounds for disallowance by CITY of any fees or expenses based upon such entries.

CITY is a public agency subject to Chapter 119, Florida Statutes. To the extent CONTRACTOR is acting on behalf of CITY pursuant to Section 119.0701, Florida Statutes, CONTRACTOR shall:

a. Keep and maintain public records that ordinarily and necessarily would be required to be kept and maintained by CITY were CITY performing the services under this agreement;

b. Provide the public with access to such public records on the same terms and conditions that the County would provide the records and at a cost that does not exceed that provided in Chapter 119, Florida Statutes, or as otherwise provided by law;

c. Ensure that public records that are exempt or that are confidential and exempt from public record requirements are not disclosed except as authorized by law; and

d. Meet all requirements for retaining public records and transfer to CITY, at no cost, all public records in possession of the CONTRACTOR upon termination of this Agreement and destroy any duplicate public records that are exempt or confidential and exempt. All records stored electronically must be provided to the CITY.

e. IF THE CONTRACTOR HAS QUESTIONS REGARDING THE APPLICATION OF CHAPTER 119, FLORIDA STATUTES, TO THE CONTRACTOR'S DUTY TO PROVIDE PUBLIC RECORDS RELATING TO THIS CONTRACT, CONTACT THE CUSTODIAN OF PUBLIC RECORDS AT: (305) 953-2800; jflores@Opalockafl.gov; 780 Fisherman Street, Fourth Floor, Opa-locka, FL 33054.

12.4 Ownership of Documents. Reports, surveys, plans, studies and other data provided in connection with this Agreement are and shall remain the property of City.

12.5 No Contingent Fees. CONTRACTOR warrants that it has not employed or retained any company or person, other than a bona fide employee working solely for the CONTRACTOR, to solicit or secure this Agreement, and that it has not paid or agreed to pay any person, company, corporation, individual or CONTRACTOR, other than a bona fide employee working solely for CONTRACTOR, any fee, commission, percentage, gift, or other consideration contingent upon or resulting from the award or making of this Agreement. For the breach or violation of this provision, the CITY shall have the right to terminate the Agreement without liability at its discretion, to deduct from the contract price, or otherwise recover the full amount of such fee, commission, percentage, gift or consideration.

12.6 Notice. Whenever any party desires to give notice unto any other party, it must be given by written notice, sent by registered United States mail, with return receipt requested, addressed to the party for whom it is intended and the remaining party, at the places last specified, and the places for giving of notice shall remain such until they shall have been changed by written notice in compliance with the provisions of this section. For the present, the CONTRACTOR and the CITY designate the following as the respective places for giving of notice:

CITY: Darvin Williams, Interim City Manager
780 Fisherman Street, Fourth Floor
Opa-Locka, FL 33054

Copy To: Burnadette Norris-Weeks, City Attorney
Burnadette Norris-Weeks, P.A.
401 North Avenue of the Arts
Fort Lauderdale, Florida 33311

CONTRACTOR: MD Shahinur Rahman
SSN Engineering, LLC
11186 SW 17th Mnr
Davie, FL 33324

12.7 Binding Authority. Each person signing this Agreement on behalf of either party individually warrants that he or she has full legal power to execute this Agreement on behalf of the party for whom he or she is signing, and to bind and obligate such party with respect to all provisions contained in this Agreement.

12.8 Exhibits. Each Exhibit referred to in this Agreement forms an essential part of this Agreement. The exhibits if not physically attached should be treated as part of this

Agreement and are incorporated herein by reference.

12.9 Headings. Headings herein are for convenience of reference only and shall not be considered on any interpretation of this Agreement.

12.10 Severability. If any provision of this Agreement or application thereof to any person or situation shall, to any extent, be held invalid or unenforceable, the remainder of this Agreement, and the application of such provisions to persons or situations other than those as to which it shall have been held invalid or unenforceable shall not be affected thereby, and shall continue in full force and effect and be enforced to the fullest extent permitted by law.

12.11 Governing Law. This Agreement shall be governed by the laws of the State of Florida with venue lying in Miami-Dade County, Florida.

12.12 Disputes. Any claim, objection, or dispute arising out of the terms of this Agreement shall be litigated in the Eleventh Judicial Circuit Court in and for Miami-Dade County.

12.13 Attorney's Fees. To the extent authorized by law, in the event that either party brings suit for enforcement of this Agreement, the prevailing party shall be entitled to attorney's fees and court costs in addition to any other remedy afforded by law.

12.14 Extent of Agreement. This Agreement together with Contract Documents, attached as an Exhibits hereto, as amended herein above represents the entire and integrated agreement between the CITY and the CONTRACTOR and supersedes all prior negotiations, representations or agreements, either written or oral. To the extent of any conflict in the documents, this Agreement shall control.

12.15 Waiver. Failure of the CITY to insist upon strict performance of any provision or condition of this Agreement, or to execute any right therein contained, shall not be construed as a waiver or relinquishment for the future of any such provision, condition, or right, but the same shall remain in full force and effect.

13.16 Scrutinized Companies. Contractor hereby certifies that it: a) has not been placed on the Scrutinized Companies that Boycott Israel List, nor is engaged in a boycott of Israel; b) has not been placed on the Scrutinized Companies with Activities in Sudan List nor the Scrutinized Companies with Activities in the Iran Petroleum Energy Sector List; and c) has not been engaged in business operations in Cuba or Syria. If City determined that Contractor has falsely certified facts under this paragraph or if Contractor is found to have been placed on the Scrutinized Companies Lists or is engaged in a boycott of Israel after the execution of this Agreement, City will have all rights and remedies to terminate this Agreement consistent with Section 287.135, Florida Statutes, as amended.

The City reserves all rights to waive the certifications required by this paragraph on a case-by-case exception basis pursuant to Section 287.135, Florida Statutes, as amended. City reserves all rights to waive the certifications required by this paragraph on a case-by-case exception basis pursuant to Section 287.135, Florida Statutes, as amended.

Contractor shall not enter into a contract with an entity which would give access to an individual's personal identifying information if: (1) the entity is owned by the government of a foreign country of concern; (2) the government of a foreign country of concern has a controlling interest in the entity; or (3) the entity is organized under the laws or has its principal place of business in a foreign country of concern Section 287.138(2) (a)-(c), Fla. Stat. (2023), under Chapter 2023-33, Laws of Florida.

[REMAINDER OF PAGE LEFT INTENTIONALLY BLANK]

IN WITNESS OF THE FOREGOING, the parties have set their hands and seals the day and year first written above.

CITY OF OPA-LOCKA

ATTEST:

_____ BY: _____

City Clerk Interim City Manager

APPROVED AS TO FORM

_____

City Attorney

CONTRACTOR:
SSN Engineering, LLC

WITNESSES:

_____ _____
MD Shahinur Rahman

_____
ATTEST:

_____
SECRETARY

STATE OF FLORIDA)
) SS:
COUNTY OF MIAMI-DADE)

BEFORE ME, an officer duly authorized by law to administer oaths and take acknowledgments, personally appeared _____ as _____, of , a Florida corporation, and acknowledged executed the foregoing Agreement as the proper official of _____, for the use and purposes mentioned in it and affixed the official seal of the corporation, and that the instrument is the act and deed of that corporation.

IN WITNESS OF THE FOREGOING, I have set my hand and official seal at in the State and County aforesaid on this __ day of _____, 2024.

_____
NOTARY PUBLIC

My Commission Expires:

See attached document for Exhibit "A"

(Response to Request for Qualifications)

See attached document for Exhibit "B"

(CITY'S to Request for Qualifications)

(954) 944-3272
(954) 326-8295
www.ssnengineering.com
mrahman@ssnengineering.com

December 4, 2024

Airia Austin
Public Works Director, City of Opa-locka
Public Works & Utilities Office
12950 Lejeune Road, 2nd Floor
Opa-locka, FL 33054

RE: CITY OF OPA-LOCKA SANITARY SEWER SYSTEM HYDRAULIC MODELING UPDATE

Mr. Austin:

SSN Engineering, Inc ("SSN") is pleased to submit this letter of agreement (the "Agreement") to the City of Opa-Locka ("Client") for professional Civil Engineering Consulting services for the above-referenced project. The proposed engineering services will be provided by the terms and conditions set forth herein.

PROJECT UNDERSTANDING

We understand that the City of Opa-locka needs professional services to prepare a comprehensive Sanitary Sewer Collection System Hydraulic Modeling update for the entire sewer system network within the City Limit. The object of the update:

i) Assist in the development and implementation of operation and maintenance procedures to optimize transmission capacity within the collection system,
ii) Evaluate the impact of infiltration and inflow rehabilitation programs, proposed system modifications, upgrades and expansions to the transmission capacity and performance of the collection system.

SCOPE OF SERVICES

The following task will be performed to update the model:

1) Revisit all the properties (5,353 altogether) in the City of Opa-Locka's boundary, from the Miami-Dade County property appraisal information. Establish new sewer estimated flow from the occupant of the property.
2) Collect the sewer flow data from Miami-Dade County. Collect the concurrent water bill data from the City of Opa-Locka. Collect the concurrent Rainfall data from SFWMD and the City of Opal-Locka.
3) Re-insert the data from task-1 and task-2 in the Calibration Model and validate the Calibration model by adjusting the variables.
4) Establish two (2) dry flow models and three (3) wet flow models.
5) Perform the relative analysis from the dry and wet flow model from task 4.
6) Update the report with new data, models, analysis, and recommendations.

PROJECT APPROACH

SSN Engineering will manage the assigned projects and tasks, carefully control costs and resources, and complete the project work on schedule. MD Shahinur Rahman, PE will be the project manager who will act as the City's primary contact and will be responsible for the SSN's work (including sub-consultant work if applicable).

To ensure the project remains on schedule, the following project management activities will be performed:

MEETING WITH CITY STAFF

- Review the scope of services with City staff and review relevant studies including, but not limited to, the existing/proposed sanitary sewer master plan and the City's Comprehensive Plan.
- Meet with City staff to collect information that is vital for this project.
- Evaluate the existing sewer collection system to determine areas of deficiency.

SEWER HYDRAULIC MODELING

- SSN will use XP-SWMM to update the existing Model. Miami-Dade County except for the model platform in XP-SWMM or InfoWorks.

- Using flow data collected from the City data and field investigations, SSN will update the existing calibration hydraulic flow model of the City's sewer collection system.

- Will identify the seasonal or daily variation of the flow.

DELIVERABLES

- SSN will prepare an updated comprehensive written report describing the work performed, findings and recommendations to the City of Opa-Locka and Miami-Dade County.

SCHEDULE

We will provide our services in an expeditious and orderly manner to meet the schedule mutually developed by the Client and Consultant for the various elements of the project. Based on the "Scope of Services" the estimated time frame for the deliverable is from Nine (9) to twelve (12) months from the date of NTP.

FEE AND BILLING

TOTAL LUMP SUM FEE FOR SSN ENGINEERING……..... $124,000.00

If you concur with the foregoing and wish to direct us to proceed with the services, please execute the enclosed copy of this letter agreement in the space provided and return the same to the undersigned. We appreciate this opportunity to submit this letter of agreement. Please contact me at (954) 326-8295, if you have any questions.

Sincerely,

Rubel Siddique

SSN ENGINEERING, LLC
RUBEL SIDDIQUE, P.E.

CITY OF OPA-LOCKA
SHA'MECCA LAWSON

Agreed to this _____ day of _____ , 2024.

Sponsored by: Interim City Manager

RESOLUTION NO. _____

A RESOLUTION OF THE CITY COMMISSION OF THE CITY OF OPA-LOCKA, FLORIDA, APPROVING THE RECOMMENDATION OF THE HISTORIC ENVIRONMENTAL PRESERVATION BOARD TO ISSUE A SPECIAL CERTIFICATE OF APPROPRIATENESS FOR THE STRUCTURE AT 806 JANN AVENUE TO ALLOW FOR THE INSTALLATION OF A PHOTOVOLTAIC SOLAR SYSTEM ON THE ROOF OF THIS REGISTERED HISTORIC PROPERTY; PROVIDING FOR AN EFFECTIVE DATE.

WHEREAS, the City of Opa-Locka, Florida, ("City") has established a Historic Preservation Ordinance, and established the Historic Environmental Tree Preservation Board by Ordinance 16-13 in order to preserve and protect the City's historic and cultural heritage and to foster civic pride; and

WHEREAS, the Historic Environmental Preservation Board also established to protect the green environment especially, the preservation of trees in the City in order to support Arbor Day principles; and

WHEREAS, the City is required to have a fully functional process, as required by Miami-Dade County, in order to maintain a separate, independent Historic Preservation Ordinance and Board; and

WHEREAS, the Historic Environmental Preservation Board has received an application for the issuance of a certificate of appropriateness; and

WHEREAS, pursuant to City Ordinance 2022-02, Section 2-570.84 (2) (B) *Special certificate of appropriateness*: "For all applications for a special certificate of appropriateness involving the demolition, removal, reconstruction or new construction at an individual site or in a district, a special certificate of appropriateness is required that is issued by recommendation of the Historic Environmental Preservation Board" and review and approval by the City Commission; and

WHEREAS, pursuant to Chapter 2, Article XI, Division 13, Sec. 2-570.82(3) of the City of Opa-Locka Code of Ordinances, the duties and responsibilities of the Historic

Environmental Preservation Board shall include responsibilities to "issue or deny certificates of appropriateness and certificates to dig"; and

WHEREAS, further, the City has adopted Ordinance 2022-02 to establish minimum standards for municipal historic preservation programs, as set forth in the Miami-Dade County Historic Preservation Ordinance Section 16A-3.1; and

WHEREAS, the Historic Preservation Ordinance permits issuance of a Special Certificate of Appropriateness to allow for the installation of a photovoltaic solar system on the roof of this historic property located at 806 Jann Avenue, within the City, after an approval recommendation from the Historic Environmental Preservation Board, and review and approval by the City Commission in accordance with Ordinance 2022-02; and

WHEREAS, on July 30, 2024, the Historic Environmental Preservation Board held a meeting to, among other business matters, consider a request for a certificate of appropriateness approval for the structure at 806 Jann Avenue, within the City, to allow for the installation of a photovoltaic solar system on the roof of this historic property. After presentation and discussion, the Historic Environmental Preservation Board recommended approval of the Certificate of Appropriateness by 4-0 vote; and

WHEREAS, the City desires to approve the application for and the issuance of a certificate of appropriateness for the subject registered historic property.

NOW THEREFORE, BE IT RESOLVED BY THE CITY COMMISSION OF THE CITY OF OPA-LOCKA, FLORIDA:

Section 1. **ADOPTION OF RECITALS:** The recitals to the preamble herein are incorporated by reference.

Section 2. **AUTHORIZATION:** The City Commission of the City of Opa-Locka, Florida hereby approves the recommendation of the Historic Environmental Preservation Board to issue a certificate of appropriateness to allow for the installation of a photovoltaic solar system on the roof of this registered historic property located at 806 Jann Avenue, within the City.

Section 3. SCRIVENER'S ERRORS.

Sections of this Resolution may be renumbered or re-lettered and corrections of typographical errors which do not affect the intent may be authorized by the City Manager, following review by the City Attorney, without the need for public hearing, by filing a corrected copy of same with the City Clerk.

Section 4. EFFECTIVE DATE.

This Resolution shall take effect upon the adoption and is subject to the approval of the Governor or Governor's Designee.

PASSED AND ADOPTED this _____ day of _____, 2024.

_____
John Taylor, Mayor

ATTEST:

_____
Joanna Flores, City Clerk

APPROVED AS TO FORM AND LEGAL SUFFICIENCY:

_____
Burnadette Norris-Weeks, P.A.
City Attorney

Moved by: _____

Seconded by: _____

VOTE:

Commissioner Bass	_____
Commissioner Santiago	_____
Commissioner Ervin	_____
Vice Mayor Kelley	_____
Mayor Taylor	_____

City of Opa-locka
Agenda Cover Memo

Department Director:	Gregory D. Gay			**Department Director Signature:**		
Interim City Manager:	Shamecca Lawson			**ICM Signature**		
Commission Meeting Date:	12.11.2024		**Item Type:** *(Enter X in box)*	**Resolution**	**Ordinance**	**Other**
				X		
Fiscal Impact: *(Enter X in box)*	**Yes**	**No**	**Resolution Reading:** *(Enter X in box)*		**1st Reading**	**2nd Reading**
					X	
		X	**Public Hearing:** *(Enter X in box)*		**Yes** / **No**	**Yes** / **No**
					X	X
Funding Source: *Account#* **:**	*(Enter Fund & Dept)* Ex: N/A See Financial Impact section below		**Advertising Requirement:** *(Enter X in box)*		**Yes**	**No**
					X	
ILA Required: *(Enter X in box)*	**Yes**	**No**	**RFP/RFQ/Bid#:**			
	X					
Strategic Plan Related *(Enter X in box)*	**Yes**	**No**	**Strategic Plan Priority Area:** **Enhance Organizational** ☐ **Bus. & Economic Dev** ■ **Public Safety** ☐ **Quality of Education** ☐ **Qual. of Life & City Image** ■ **Communication** ☐		**Strategic Plan Obj./Strategy:** *(list the specific objective/strategy this item will address)*	
	X					
Sponsor Name	Interim City Manager		**Department:** Planning & Community Development		City Manager	

Short Title:

A RESOLUTION OF THE CITY COMMISSION OF THE CITY OF OPA-LOCKA, FLORIDA, APPROVING THE RECOMMENDATION OF THE HISTORIC ENVIRONMENTAL PRESERVATION BOARD TO ISSUE A SPECIAL CERTIFICATE OF APPROPRIATENESS FOR THE STRUCTURE AT 806 JANN AVENUE TO ALLOW FOR THE INSTALLATION OF A PHOTOVOLTAIC SOLAR SYSTEM ON THE ROOF OF THIS REGISTERED HISTORIC PROPERTY; PROVIDING FOR AN EFFECTIVE DATE.

Staff Summary:

The City has adopted Ordinance 22-02 to establish minimum standards for Municipal Historic Preservation Programs and to align with Miami-Dade County's Historic Preservation Ordinance Section 16A-3.1. This ordinance ensures that all applications requesting a special certificate of appropriateness involving the demolition, removal, reconstruction or new construction at an individual site or in a district are presented to the Historic Environmental Preservation Board for recommendation prior to the review and approval of the City Commission. The Historic Environmental Preservation Board held a meeting on July 30, 2024 to discuss current projects and to consider a request for a certificate of appropriateness approval for the registered historic property

located at 806 Jann Avenue. The property owner is seeking approval to allow for the installation of a photovoltaic solar system on the roof. After presentation and discussion, the Historic Environmental Preservation Board recommended approval of the Certificate of Appropriateness by 4-0 vote.

BACKGROUND:

The City of Opa-locka established the Opa-locka Historic Preservation Board by Ordinance 81-13 for the purpose of protecting and perpetuating properties worthy of historic preservation. The City adopted Resolution 91-01 and Ordinance 91-02 to identify the properties in the City that were deemed outstanding examples of Moorish architecture, that were built based on the original plans as designed by its founder, Glenn Curtiss and to establish a list of properties that meet the requirements for being of historical, cultural, architectural and archeological significance. The City Commission has determined that it is in the best interests and welfare of the City of Opa-locka and its residents to enact an ordinance that establishes a board that performs the functions of both the Historic Preservation Board and the Environmental Tree Board. The City established the Historic Environmental Preservation Board pursuant to Ordinance 16-13 on October 12, 2016 in order to preserve and protect the City's historic and cultural heritage and foster civic pride. The Historic Environmental Preservation Board was also established to protect the green environment within the City, especially, the preservation of its trees in order to support Arbor Day principles. The Historic Environmental Preservation Board held a meeting on January 28, 2021 to introduce new board members, establish Board Chair and Vice-Chair, and to make improvements to the HEPB. Pursuant to Planning & community Development Department Director & Staff meeting with Miami Dade County Historic Preservation Chief, we received notice that independent municipal historic preservation programs were required to adopt the minimum standards as provided by Miami-Dade County regulations, Chapter 16A-3.1. The City Historic Environmental Preservation Legislation, Chapter 2 Article XI, Division 13, Sec 2-570.81 and Sec. 2-570.82 of the City Code of Ordinances concerning the composition, term of office, qualifications, organization, meeting, records standards and established duties and responsibilities of the HEPB.

Financial Impact:

The City will receive permit fees associated with ensuring the preservation of this building.

Proposed Action:

Planning and Community Development staff recommends approval of this resolution.

Attachment:

Draft Resolution
Ordinance 22-02 HEPB Minimum Standards
HEPB Application for Certificate of Appropriateness – 806 Jann Avenue
Building Plans for the installation of Photovoltaic Solar System.

VANMEC, ALEX
NEW GRID-INTERACTIVE PHOTOVOLTAIC SYSTEM
DC SYSTEM SIZE (15.36 KW)

GENERAL NOTES

SCOPE OF WORK
1. THE PROJECT IS NEW PHOTOVOLTAIC SYSTEM CONSISTING OF SOLAR ARRAY(S) AND ASSOCIATED POWER CONDITIONING EQUIPMENT.
2. ALL CONSTRUCTION SHALL COMPLY WITH THE ADOPTED EDITION OF THE FLORIDA BUILDING CODE AND NATIONAL ELECTRICAL CODE AS SPECIFIED IN THE PROJECT-SPECIFIC NOTES. ALL CONSTRUCTION SHALL ALSO COMPLY WITH ALL APPLICABLE CITY, COUNTY, STATE AND LOCAL ELECTRICAL UTILITY CODES, RULES AND REGULATIONS.
3. THE SYSTEM WILL BE INTERCONNECTED TO THE ELECTRICAL UTILITY GRID IN ACCORDANCE WITH THE REQUIREMENTS OF THE ADOPTED ELECTRIC AND THE ELECTRICAL UTILITY COMPANY.
4. THE CONTRACTOR SHALL PROVIDE LABOR FOR CONSTRUCTION OF THE ARRAY AND INSTALLATION OF ALL ELECTRICAL EQUIPMENT. THE CONTRACTOR WILL PROVIDE COMPETENT SUPERVISION FOR THE WORK TO BE ACCOMPLISHED. CONTRACTOR SHALL SUBMIT SHOP DRAWINGS FOR APPROVAL BY OWNER AS REQUESTED.
5. THERE WILL BE NO SUBMISSION FOR ANY EQUIPMENT WITH THE VENDOR PART NUMBER ON THE DRAWING WITHOUT WRITTEN APPROVAL OF THE PROFESSIONAL ENGINEER. COMMON ITEMS SUCH AS CONDUITS, WIRE, FITTINGS, ETC. ARE NOT SPECIFIED BY VENDOR BUT THE SIZES CANNOT BE REDUCED.
6. THE CONSTRUCTION CONTRACTOR AND HIS SUBCONTRACTORS AGREE THAT IN ACCORDANCE WITH THE GENERALLY ACCEPTED CONSTRUCTION PRACTICES CONSTRUCTION CONTRACTOR AND HIS SUBCONTRACTORS WILL BE REQUIRED TO ASSUME SOLE AND COMPLETE RESPONSIBILITY FOR THE SAFETY OF ALL PERSON AND PROPERTY, AND THAT THIS REQUIREMENT SHALL BE MADE TO APPLY CONTINUOUSLY AND IS NOT LIMITED TO NORMAL WORKING HOURS.
7. CONSTRUCTION CONTRACTOR AND HIS SUBCONTRACTORS FURTHER AGREE TO DEFEND, INDEMNIFY AND HOLD HARMLESS THE DESIGN PROFESSIONAL FROM ANY AND ALL LIABILITY, REAL OR ALLEGED, IN CONNECTION WITH THE PERFORMANCE OF WORK ON THIS PROJECT, EXCEPT LIABILITY ARISING FROM THE SOLE NEGLIGENCE OF THE DESIGN PERSONNEL.
8. CONSTRUCTION CONTRACTOR AND HIS SUBCONTRACTORS WILL BE REQUIRE TO REPAIR ANY DAMAGE DONE TO BUILDINGS, GROUNDS OR UTILITIES AT NO ADDITIONAL COST TO THE CUSTOMER. DEFECTIVE MATERIAL OR WORKMANSHIP WILL NOT BE ALLOWED ON THIS PROJECT.RESONABLE HOUSEKEEPING AND CLEAN UP SHALL BE CONDUCTED BOTH DURING THE EXECUTION OF AND AT THE CONCLUSION OF THE PROJECT.
9. CONTRACTOR SHALL LOCATE ALL POST TENSION CABLES ON CONCRETE ROOFS AND SHALL VERIFY THAT SUCH CABLES DO NOT INTERFERE WITH THE LOCATIONS OF FASTENERS AS SHOWN IN THE ATTACHMENT DETAILS.

GENERAL
1. THE ACTUAL SYSTEM EQUIPMENT SPECIFICATIONS FOR THE PHOTOVOLTAIC SYSTEM ARE INCLUDED IN THE PV SYSTEM SPECIFICATION ON THE TITLE PAGE AND THROUGHOUT THE DRAWING AS NECESSARY FOR CLARITY.IN ADDITION THE ACTUAL VENDOR SPECIFICATION DATA SHEETS WILL BE INCLUDED AS PART OF THE PERMIT SUBMITTAL.
2. ONLY NEW MATERIAL WILL BE INSTALLED AS PART OF THE PROJECT. ALL NEW INSTALLED EQUIPMENT WILL BE APPROPRIATELY LISTED AND NEMA RATED. ALL NEW EQUIPMENT SHALL HAVE PERMANENT PLASTIC ENGRAVED IDENTIFICATION TAGS INSTALLED.
3. ALL CUTTING AND PATCHING REQUIRED FOR INSTALLATION OF NEW RACEWAYS AND EQUIPMENT SHALL BE RESPONSIBILITY OF THE ELECTRICAL CONTRACTOR. ALL WORK SHALL BE PERFORMED BY TRADESMAN EXPERIENCED IN WORK REQUIRED. ALL FINISHES SHALL MATCH THE EXISTING ADJACENT FINISHES. OPENING IN FIRE RATED WALLS WILL BE PATCHED IN A MANNER MAINTAINING THE ORIGINAL FIRE AND SMOKE RATING.
4. DRAWINGS ARE DIAGRAMMATIC IN NATURE AND CANNOT SHOW EVERY CONNECTION, JUNCTION BOX, WIRE,CONDUIT, ETC THE CONTRACTOR SHALL BE RESPONSIBLE FOR PROVIDING A COMPLETE AND FUNCTIONAL ELECTRICAL SYSTEM.
5. CONTRACTOR SHALL COORDINATE ALL POWER OUTAGES WITH THE OWNER'S REPRESENTATIVE IN ADVANCE.
6. PANEL DESIGNATIONS SHOWN ON THESE DRAWINGS ARE GIVEN FOR CLARIFICATION OF THE CIRCUITING ONLY AND MAY NOT CORRESPOND TO THE DESIGNATIONS FOUND IN THE FIELD.
7. ELECTRICAL TESTING SHALL BE IN COMPLIANCE WITH NFPA 70E
8. SMOKE ALARMS SHALL BE INSTALLED INSIDE ALL SLEEPING ROOMS AND OUTSIDE EACH SEPARATE SLEEPING AREA IN THE IMMEDIATE VICINITY OF BEDROOMS. ADDITIONALLY, EACH STORY WITHIN THE DWELLING, INCLUDING BASEMENTS AND HABITABLE ATTICS, SHALL CONTAIN A SMOKE ALARM. SMOKE ALARMS SHALL BE INTERCONNECTED IN SUCH A MANNER THAT THE ACTIVATION OF ONE ALARM WILL ACTIVATE ALL OF THE ALARMS IN THE INDIVIDUAL UNIT. PHYSICAL INTERCONNECTION OF SMOKE ALARMS SHALL NOT BE REQUIRED WHERE LISTED WIRELESS ALARMS ARE INSTALLED AND ALL ALARMS SOUND UPON ACTIVATION OF ONE ALARM. INSTALL CARBON MONOXIDE ALARMS WITHIN 10 FEET OF EACH ROOM USED FOR SLEEPING PURPOSES WHEN THE HOME CONTAINS AN ATTACHED GARAGE OR FUEL-BURNING APPLIANCES. SMOKE ALARMS AND CARBON MONOXIDE ALARMS THAT ARE NOT HARDWIRED SHALL BE POWERED BY 10-YEAR, NON- REMOVABLE BATTERIES. FBCR 314.3, FBCR 314.6 [EXCEPTION 2], FBCR 315.1.

CONDUIT AND WIRE
1. ALL EXISTING CONDUIT RUNS ARE NOT SHOWN. CONTRACTOR SHALL VERIFY EXISTING CONDUIT LOCATIONS IN FIELD.
2. ALL CONDUCTORS SHALL BE INSTALLED IN A RACEWAY AS SPECIFIED IN THE DRAWINGS. THE EXCEPTION IS PV SOURCE CIRCUIT CONDUCTORS MADE OF PV WIRE CABLE. THESE CONDUCTORS MAY BE EXPOSED WITHIN THE PV ARRAY.
3. INDOOR EMT FITTINGS MAY BE COMPRESSION TYPE OR STEEL SET SCREW TYPE. OUTDOOR EMT FITTINGS MUST BE COMPRESSION RAINTIGHT TYPE.
4. A PULL ROPE SHALL BE INSTALLED IN ALL EMPTY CONDUITS.
5. CONDUCTORS MATERIAL, EITHER COPPER OR ALUMINUM IN SPECIFIED IN THE DRAWINGS. CONDUCTOR INSULATION TYPE SHALL BE THWN - 2 UNLESS OTHERWISE NOTED.

EQUIPMENT
1. ALL ELECTRICAL COMPONENTS INSTALLED OUTDOORS, EXPOSED TO WEATHER OR IN DAMP LOCATIONS SHALL BE RATED FOR NEMA 3R OR GREATER. INSTALLATION OF THESE COMPONENTS MUST COMPLY WITH THE MANUFACTURER'S INSTALLATION INSTRUCTIONS.
2. ALL RACEWAYS, CABINETS, BOXES, FIXTURES SHALL BE SUPPORTED FROM THE BUILDING STRUCTURE IN AN APPROVED MANNER.
3. AT THE COMPLETION OF THE PROJECT NEATLY TYPED ACCURATE PANEL BOARD DIRECTORIES INDICATING ALL BRANCH CIRCUITS AND SPARES WILL BE PROVIDED. ALL SPARES SHALL BE LEFT IN THE OFF POSITION.
4. ALL SAFETY SWITCHES SHALL BE HEAVY DUTY TYPE WITH COVER INTERLOCK AND HANDLE LOCK OFF PROVISIONS. SWITCHES SHALL BE MANUFACTURED BY A COMPANY CONSISTENT WITH OTHER INSTALLED EQUIPMENT WHENEVER POSSIBLE. PART NUMBERS, RATING AND FUSING SHALL BE AS SHOWN ON THE DRAWINGS.
5. CONTRACTOR SHALL ENSURE ALL NEC AND MAINTENANCE CLEARANCE REQUIREMENTS ARE MET FOR NEW EQUIPMENT AND MAINTAINED FOR EXISTING EQUIPMENT.
6. CONTRACTOR SHALL FIELD VERIFY EQUIPMENT CLEARANCE AND PLACEMENTS WHILE COORDINATING LOCATORS WITH OTHER TRADES, CONSTRUCTION MANAGERS, AND SITE SUPERVISORS PRIOR TO PURCHASING AND INSTALLING EQUIPMENT.
EVERY STRUCTURE AND PORTION THEREOF, INCLUDING NONSTRUCTURAL COMPONENTS THAT ARE PERMANENTLY ATTACHED TO STRUCTURES AND THEIR SUPPORTS AND ATTACHMENTS, SHALL BE DESIGNED AND CONSTRUCTED TO RESIST THE EFFECTS OF EARTHQUAKE MOTIONS IN ACCORDANCE WITH ASCE 7, EXCLUDING CHAPTER 14 AND APPENDIX 11A. THE SEISMIC DESIGN CATEGORY FOR A STRUCTURE IS PERMITTED TO BE DETERMINED IN ACCORDANCE WITH SECTION 1613 OR ASCE 7.
7. ALL CONTROLS AND SWITCHES INTENDED TO BE USED BY THE OCCUPANT OF THE ROOM OR AREA TO CONTROL LIGHTING AND RECEPTACLE OUTLETS, APPLIANCE AND COOLING, HEATING AN D VENTILATING EQUIPMENT, SHALL BE LOCATED
NO MORE THAN 48 INCHES MEASURED FROM THE TOP OF THE JUNCTION OR DEVICE BOX NOR LESS THAN 15 INCHES MEASURED TO THE BOTTOM OF THE JUNCTION OR DEVICE BOX ABOVE THE FINISHED FLOOR.
8. ALL RECEPTACLE OUTLETS ON BRANCH CIRCUITS OF 30 - AMPERES OR LESS AND COMMUNICATION SYSTEM RECEPTACLES SHALL BE LOCATED NO MORE THAN 48 INCHES MEASURED FROM THE TOP OF THE RECEPTACLE OUTLET BOX OR RECEPTACLE HOUSING NOR LESS THAN 15 INCHES MEASURED TO THE BOTTOM OF THE RECEPTACLE OUTLET BOX OR RECEPTACLE HOUSING ABOVE FINISHED FLOOR.

GROUNDING
1. THE GROUNDING SYSTEM SHALL MEET THE REQUIREMENTS OF THE NEC AND THE LOCAL ADOPTED CODE. ALL ELECTRICAL EQUIPMENT AND RACEWAYS SHALL BE PROPERLY GROUNDED.
2. AN INSULATED EQUIPMENT GROUNDING CONDUCTOR, IN ACCORDANCE WITH NEC CODE , SHALL BE PROVIDED IN ALL CONDUITS WITH CURRENT CARRYING CONDUCTORS. ALL LUGS AND CONNECTORS SHALL BE RATED FOR THE CONDUCTOR MATERIAL AND THE CONDITIONS OF USE.
3. THE GROUNDING RESISTIVITY WILL BE TESTED AFTER INSTALLATION TO CONFIRM 5 OHM OR LESS RESISTANCE FROM RACKING TO GROUND. IF GROUND RESISTANCE IS GREATER THAN 5 OHMS ADDITIONAL GROUNDING WILL BE INSTALLED UNTIL RESISTANCE IS LESS THAN 5 OHMS.

WIRING DEVICES
1. RECEPTACLES SHALL BE AS DESIGNED ON THE DRAWINGS AND SHOULD BE A BRAND CONSISTENT WITH OTHERS IN THE VICINITY WHENEVER POSSIBLE.
2. ALL WIRING DEVICES SHALL BE PROVIDED WITH APPROPRIATE COVER-PLATES. ANY EMPTY BOXES SHALL HAVE BLANK COVER PLATES. COVER-PLATES SHALL BE LEXAN, PLASTIC OR STAINLESS STEEL IN FINISHED AREA. GALVANIZED COVER-PLATES MAY BE USED IN EQUIPMENT ROOMS.

LABELING AND PHASING
1. FOR LABELING USE NUMBERED UV RATED LABELS TO INDICATE STRING NUMBER.
2. AS A SUBSTITUTE FOR LABELS YELLOW TAPE MAY BE USED FOR PHASING.
EACH METHOD DESCRIBED ABOVE WILL NEED TO BE PERFORMED ON BOTH POSITIVE AND NEGATIVE AT POINTS WHERE CONDUCTORS ARE TERMINATED.

SYSTEM DETAILS

DESCRIPTION	NEW GRID-INTERACTIVE PHOTOVOLTAIC SYSTEM
DC RATING OF SYSTEM	SYSTEM SIZE : 15.36 KW DC STC
AC RATING OF SYSTEM	15.2KW
MAX. AC OUT. CURRENT	64 A
NO. OF MODULES	(37) BSM415M10-54HPH(415W) BLUESUN SOLAR MODULES
NO. OF INVERTERS	(2) TESLA- 1538000-XX-Y 7.6 INVERTER
NO. OF RSDS	(13) TESLA MCI-2
POINT OF CONNECTION	LINE SIDE TAP IN THE MSP
ARRAY STRINGING	(1) BRANCH OF 10 MODULES , (3) BRANCHES OF 9 MODULES
UTILITY COMPANY	FPL (FLORIDA POWER & LIGHT)
AC GROSS POWER RATING (GPR)	13.056 KW
PV SYSTEM TIER	II (10 KW AC < GPR ≤ 100 KW AC)

SITE DETAILS

ASHRAE EXTREME LOW	5°C
ASHRAE 2% HIGH	33°C
GROUND SNOW LOAD	3 PSF
WIND SPEED	175 MPH (ASCE 7-22)
RISK CATEGORY	II
WIND EXPOSURE CATEGORY	C

GOVERNING CODES

FLORIDA RESIDENTIAL CODE, 8TH EDITION 2023 (FRC)
FLORIDA BUILDING CODE, 8TH EDITION 2023 (FBC)
FLORIDA FIRE PREVENTION CODE, 8TH EDITION 2023 (FFPC)
NATIONAL ELECTRICAL CODE, NEC 2020 CODE BOOK

SHEET INDEX

SHEET NO.	SHEET NAME
PV-1	COVER PAGE
PV-2	FIRE SAFETY PLAN
PV-3 & PV-3.1	ELECTRICAL LINE DIAGRAM
PV-4	ELECTRICAL CALCULATIONS
PV-5	LABELS
PV-6	RACKING LAYOUT
PV-7	STRUCTURAL DETAILS
PV-8	WIND LOAD CALCULATIONS
PV-9	MODULE DATASHEET
PV-10&10.1	INVERTER DATASHEET
PV-11	RACKING DATASHEET
PV-12	ATTACHMENT DATASHEET
PV-13	SEALANT DATASHEET
PV-14	GROUNDING & BONDING DATASHEET
PV-15	INSULATION PIERCING DATASHEET

SITE MAP (N.T.S)

VICINITY MAP

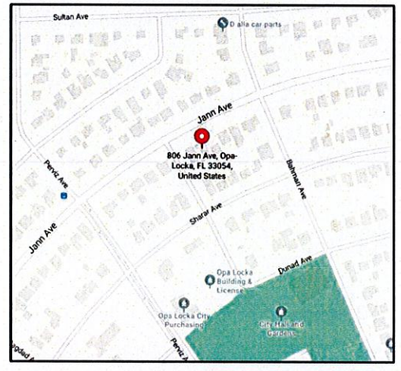

WIND FLOW MAP

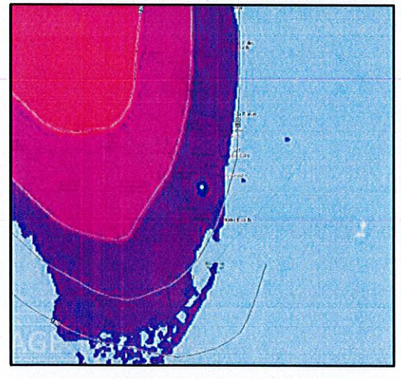

BUILDING DEPARTMENT SEAL STAMP

LORD & LAWRENCE CONSULTING ENGINEERS
CONTACT: (561) 660-5200
6801 LAKE WORTH ROAD SUITE 302
LAKE WORTH, FL 33467
FLORIDA REGISTRY# 33809

prosolar SYSTEMS
CONTACT: 888-462-5005
1100 W OAKLAND PARK BLVD,#8
WILTON MANORS, FL 33311
SOLAR CONTRACTOR LICENSE: CVC57028

VANMEC, ALEX

806 JANN AVE,
OPA-LOCKA, FL 33054
25.907862, -80.254127

SIGNATURE WITH SEAL

KIMANDY LAWRENCE
LICENSE
No. 83317
STATE OF FLORIDA
PROFESSIONAL ENGINEER

COVER PAGE
PV-1

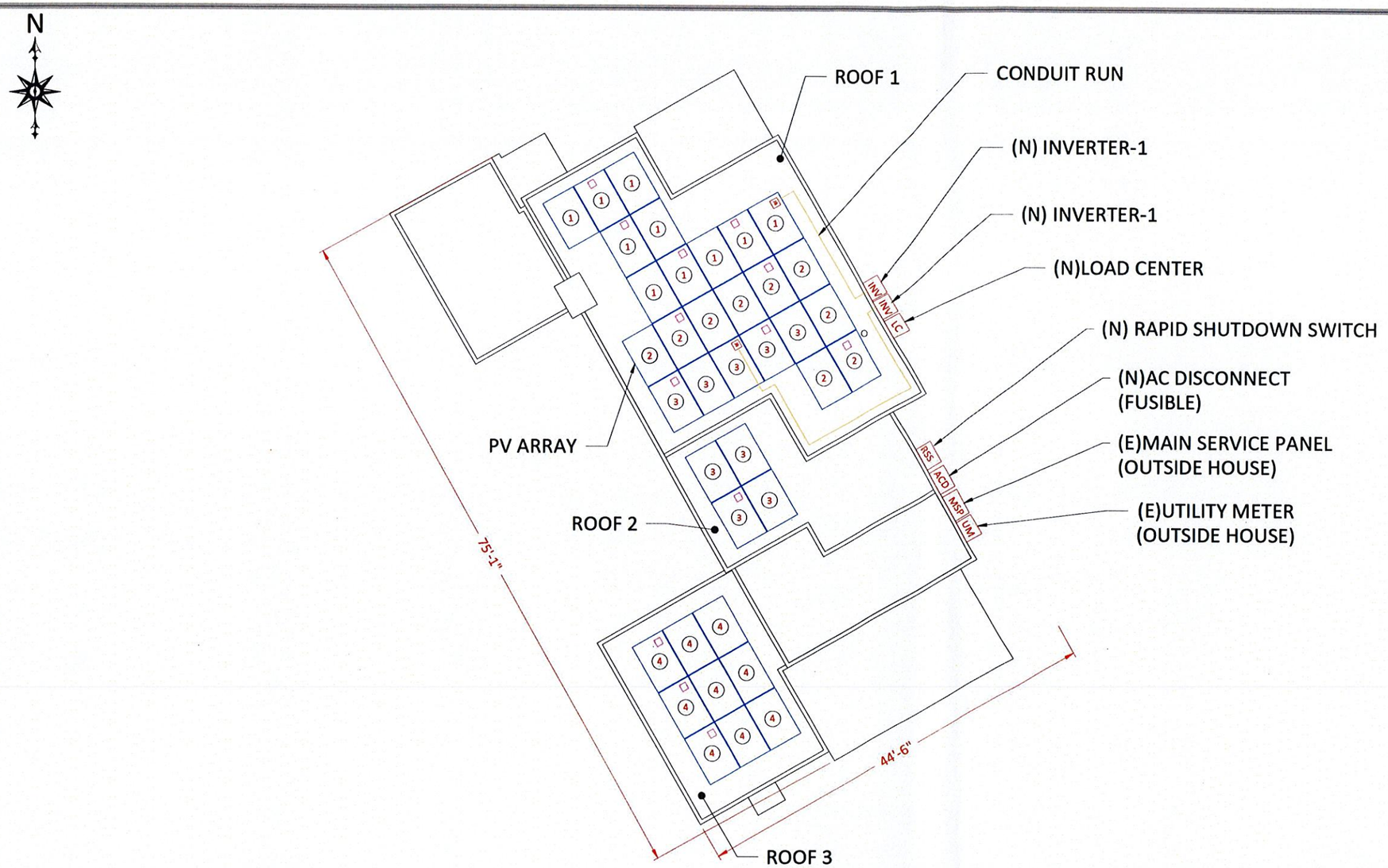

EQUIPMENT SPECIFICATIONS		
EQUIPMENT	DESCRIPTION	QUANTITY
MODULE	BSM415M10-54HPH(415W) BLUESUN SOLAR MODULES	37
INVERTER	TESLA- 1538000-XX-Y 7.6 INVERTER	2
RSD	TESLA MCI-2	13
JUNCTION BOX	GENERIC, NEMA 3R	2
LOAD CENTER	125A LOAD CENTER 120/240V NEMA 3R	1
AC DISCONNECT	AC DISCONNECT 240V, 100 AMP FUSED WITH 80 AMP FUSES, NEMA 3R, UL LISTED	1
ATTACHMENT FOR LOW SLOPE ROOF	QUICKMOUNT (QMLSH)	104
RACKING SYSTEM	IRONRIDGE (XR100) RAILS	-

ROOF INFORMATION			
ROOF	QUANTITY	SLOPE	AZIMUTH
ROOF 1	24	4.6°(1/12)	150°
ROOF 2	04	4.6°(1/12)	150°
ROOF 3	09	4.6°(1/12)	150°

ROOF SPECIFICATIONS	
ROOF MATERIAL	FLAT MODIFIED BITUMEN
ROOF CONDITION	GOOD
TRUSSES	2"x4"@24" O.C.

SYSTEM INFORMATION	
DC SYSTEM SIZE	15.36KW
AC SYSTEM SIZE	15.2KW

NOTES:

1. LOCATION OF JUNCTION BOX(ES), AC DISCONNECTS(S), AC COMBINER PANEL(S), AND OTHER ELECTRICAL EQUIPMENT(S) RELEVANT TO PV INSTALLATION SUBJECT TO CHANGE BASED ON SITE CONDITIONS.
2. ROOF ACCESS (POINTS), PATHWAYS, AND FIRE ACCESS PATHWAY SETBACKS NOT REQUIRED IN ACCORDANCE WITH 2023 FBC R 8TH EDITION SECTION 324.6 EXCEPTION 3 AS ROOF SLOPE IS 2/12 (9.46 DEGREES) OR LESS.

LEGENDS

- UM - UTILITY METER
- MSP - MAIN SERVICE PANEL
- - MID CIRCUIT INTERRUPTER
- LC - LOAD CENTER
- JB - JUNCTION BOX
- INV - INVERTER
- ACD - AC DISCONNECT
- (1) - STRING TAG
- - CONDUIT RUN
- - FIRE SETBACK
- - ROOF OBSTRUCTION

BUILDING DEPARTMENT SEAL STAMP

LORD & LAWRENCE CONSULTING ENGINEERS
CONTACT: (561) 660-5200
6801 LAKE WORTH ROAD SUITE 302
LAKE WORTH, FL 33467
FLORIDA REGISTRY# 33809

prosolar SYSTEMS
CONTACT: 888-462-5005
1100 W OAKLAND PARK BLVD,#8
WILTON MANORS, FL 33311
SOLAR CONTRACTOR LICENSE: CVC57028

VANMEC, ALEX

806 JANN AVE,
OPA-LOCKA, FL 33054
25.907862, -80.254127

SIGNATURE WITH SEAL

KIMANDY LAWRENCE LICENSE No. 83317 STATE OF FLORIDA PROFESSIONAL ENGINEER

6/4/24

FIRE SAFETY PLAN

PV-2

CONDUCTOR AND CONDUIT SCHEDULE

SR. NO.	DESCRIPTION	CONDUIT SIZE
A	PV WIRES, (1) #10 AWG THWN-2 (G)	
1	(2) #10 AWG THWN-2 (DC+) ,(2) #10 AWG THWN-2 (DC-) , (1) #10 AWG THWN-2 (G)	IN 3/4" CONDUIT RUN
2	(3) #8 AWG THWN-2 (L1,L2,N) , (1) #10 AWG THWN-2 (G)	IN 3/4" CONDUIT RUN
3	(3) #4 AWG THWN-2 (L1,L2,N) , (1) #8 AWG THWN-2 (G)	IN 1" CONDUIT RUN
4	(3) #4 AWG THWN-2 (L1,L2,N)	IN 1" CONDUIT RUN
5	(E) (3) 2/0 AWG THWN-2 (L1,L2,N) CU	EXISTING CONDUIT RUN
6	(2) #12 AWG THWN-2 (L1,L2)	IN 3/4" CONDUIT RUN

MODULE SPECIFICATION	
MANUFACTURER	BLUESUN SOLAR
MODEL NO.	BSM415M10-54HPH(415W)
PEAK POWER (Pmpp)	415 W
PEAK VOLTAGE (Vmpp)	31.63 V
PEAK CURRENT (Impp)	13.13 A
OPEN CIRCUIT VOLTAGE (Voc)	37.75 V
SHORT CIRCUIT CURRENT (Isc)	14.02 A
TOTAL QUANTITY	37

INVERTER SPECIFICATION	
MANUFACTURER	TESLA
MODEL NO.	TESLA- 1538000-XX-Y 7.6
MAX. DC INPUT VOLTAGE RANGE	60-550 VDC
MAX. CONT. OUTPUT POWER	7.68 KVA
NOMINAL AC OUTPUT VOLTAGE	240V
MAX. CONT. OUTPUT CURRENT	32 A
TOTAL QUANTITY	2

ARRAY DETAILS	
DC SYSTEM SIZE	15.36 KW
AC SYSTEM SIZE	15.2 KW
TOTAL NO. OF MODULES	37
NO. OF MODULE PER STRING	01@10, 03@09
NO. OF STRING	04

NOTE:
1.CONDUIT RUN - EMT, PVC, IMC, RMC, FMC, LFMC OR EQUIVALENT AS PER NEC.
2.ALL EQUIPMENT GROUNDING CONDUCTORS SMALLER THAN #6 AWG SHALL RUN BENEATH THE ARRAY(S) OR IN A CONDUIT RUN TO PROTECT FROM PHYSICAL DAMAGE PER NEC 690.46 AND NEC 250.120(C).
3.LEGEND: (E) = EXISTING, (N) = NEW; APPLICABLE TO CONDUCTORS, CONDUITS, ELECTRICAL ENCLOSURES, ETC.
4.VOLTAGE DROP CALCULAIONS SHALL BE PROVIDED FOR TRENCHED CONDUIT RUNS OF 75 FEET OR GREATER.
5.SOLAR CONTRACTOR SHALL ENSURE TRENCHED CONDUIT(S) MEET NEC TABLE 300.5 MINIMUM COVER REQUIREMENTS RESPECTIVE TO TYPE OF CONDUIT TRENCHED AND LOCATION OF TRENCHED CONDUIT.
6. SERVICE SUPPLYING DWELLING UNIT SHALL BE PROVIDED WITH SURGE-PROTECTIVE DEVICE (SPD) PER NEC 230.67.

NOTE:- TESLA MCI-2 SHOULD BE EITHER START OR END OF STRING

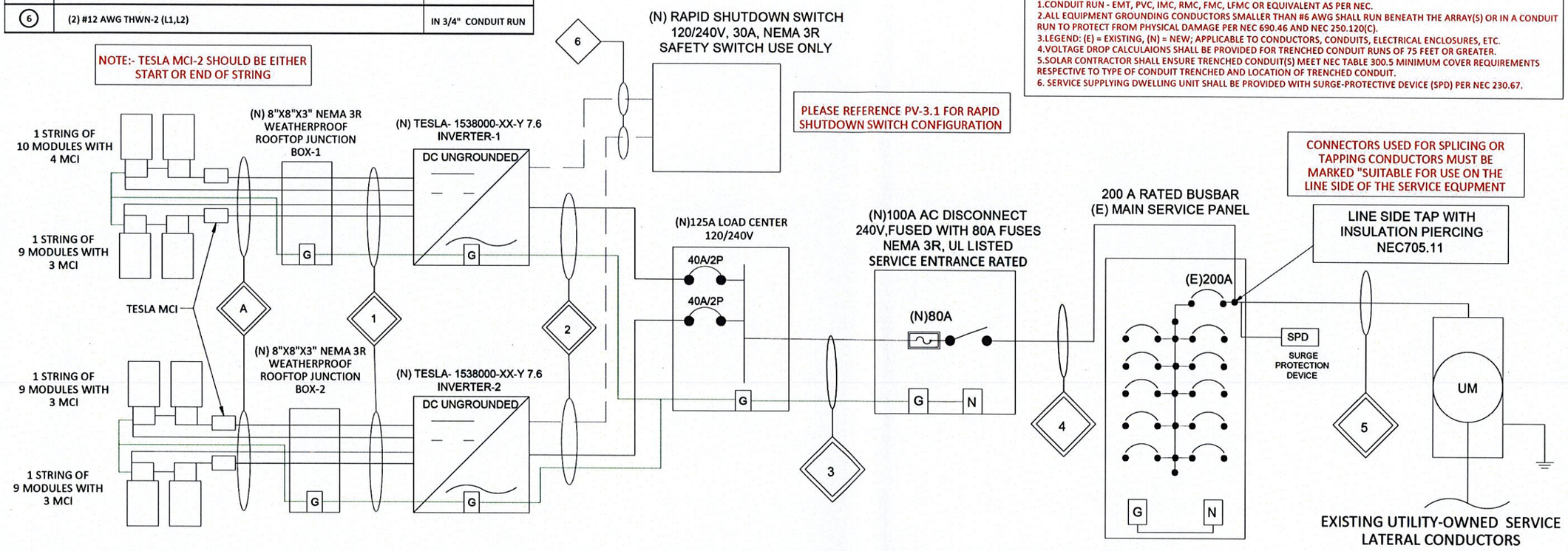

ENCLOSURE FILL CALCULATIONS PER NEC 312.7 & NEC 312.8(A)

CROSS SECTIONAL AREA AVAILABLE IN ENCLOSURE	8.00	in	x	4.00	in	x	0.75	=	**24.00 sq in.**
CROSS SECTIONAL AREA OF EXISTING CONDUCTORS	(2/0 THWN-2)		=	0.222	sq in.	x	3	=	0.67 sq in.
CROSS SECTIONAL AREA OF NEW CONDUCTORS	(4 THWN-2)		=	0.082	sq in.	x	3	=	0.25 sq in.
IPC-250-4/0 INSULATION PIERCING	1.87	in	x	2.56	in	x	3	=	14.36 sq in.
TOTAL AREA OF CONDUCTORS AND CONNECTORS			0.67	+	0.25	+	14.36	=	**15.28 sq in.**

PERCENTAGE OF AVAILABLE AREA FILLED: 15.28 < 24.00 **PASS - TAPS DO NOT EXCEED ALLOWABLE AREA**

NOTE:
MINIMUM #6 AWG COPPER GEC FROM UTILITY METER RUN TO TWO 5/8" X 8' GROUND RODS ARE AT A MINIMUM SEPARATION OF 6' . BOND TO COLD WATER PIPE AND INTER-SYSTEM BONDING JUMPER PER NEC 250.66(A) AND 250.52 (A)(5).

PER FL. STATUE 377.705 (REVISED 7/1/2017) I, KIMANDY LAWRENCE PE#83317, AN ENGINEER LICENSED PURSUANT TO CHAPTER 471, CERTIFY THAT THE PV ELECTRICAL SYSTEM AND ELECTRICAL COMPONENTS ARE DESIGNED AND APPROVED USING THE STANDARDS CONTAINED IN THE MOST RECENT VERSION OF THE FLORIDA BUILDING CODE.

BUILDING DEPARTMENT SEAL STAMP

LORD & LAWRENCE CONSULTING ENGINEERS
CONTACT: (561) 660-5200
6801 LAKE WORTH ROAD SUITE 302
LAKE WORTH, FL 33467
FLORIDA REGISTRY# 33809

prosolar SYSTEMS
CONTACT: 888-462-5005
1100 W OAKLAND PARK BLVD,#8
WILTON MANORS, FL 33311
SOLAR CONTRACTOR LICENSE: CVC57028

VANMEC, ALEX

806 JANN AVE,
OPA-LOCKA, FL 33054
25.907862, -80.254127

SIGNATURE WITH SEAL

KIMANDY LAWRENCE LICENSE No. 83317 STATE OF FLORIDA PROFESSIONAL ENGINEER

ELECTRICAL LINE DIAGRAM

PV-3

RAPID SHUTDOWN SWITCH CONFIGURATION

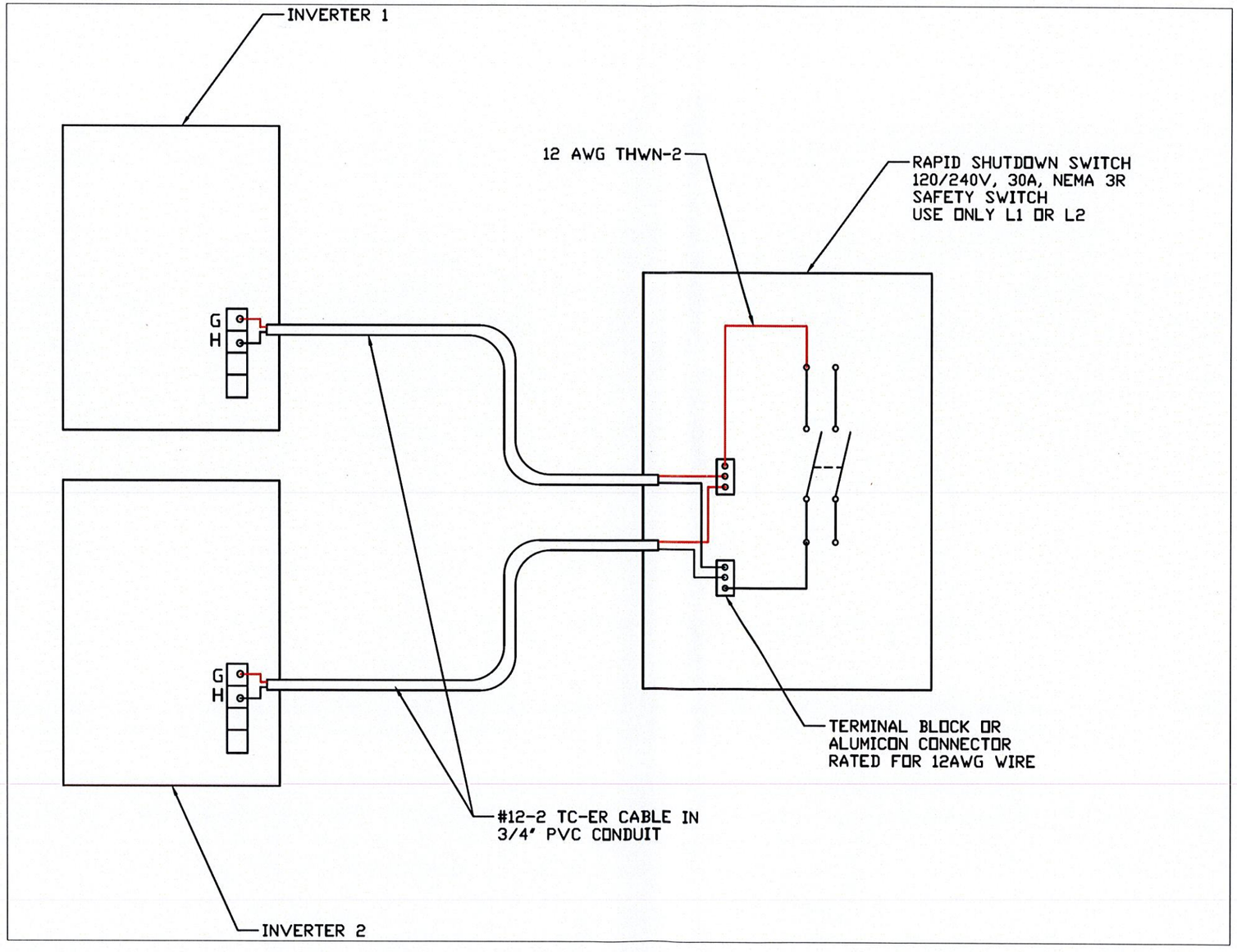

BUILDING DEPARTMENT SEAL STAMP

LORD & LAWRENCE
CONSULTING ENGINEERS
CONTACT: (561) 660-5200
6801 LAKE WORTH ROAD SUITE 302
LAKE WORTH, FL 33467
FLORIDA REGISTRY# 33809

prosolar SYSTEMS
CONTACT: 888-462-5005
1100 W OAKLAND PARK BLVD,#8
WILTON MANORS, FL 33311
SOLAR CONTRACTOR LICENSE: CVC57028

VANMEC, ALEX

806 JANN AVE,
OPA-LOCKA, FL 33054
25.907862, -80.254127

SIGNATURE WITH SEAL

KIMANDY LAWRENCE
LICENSE
No. 83317
STATE OF FLORIDA
PROFESSIONAL ENGINEER

6/4/25

ELECTRICAL LINE DIAGRAM

PV-3.1

ELECTRICAL CALCULATIONS:

1) CURRENT-CARRYING CONDUCTORS

1) BEFORE INVERTER :

AMBIENT TEMPERATURE = 33°C
CONDUIT INSTALLED AT MINIMUM DISTANCE OF 7/8 INCHES ABOVE ROOF .....NEC 310.15(B)(2)
TEMPERATURE DERATE FACTOR - (0.96) .....NEC 310.15(B)(1)
GROUPING FACTOR - (0.8) .....NEC 310.15(C)(1)

CONDUCTOR AMPACITY
= (MODULE ISC CURRENT) / A.T.F / G.F ...NEC 690.8(A)(1)(E) AND NEC 690.8(B)(2)
= 14.02/ 0.96 / 0.8
= 18.26A .....SELECTED CONDUCTOR - #10 THWN-2 ...NEC 310.16

2A) BEFORE LOAD CENTER

TEMPERATURE DERATE FACTOR - 0.96
GROUPING FACTOR - 1

CONDUCTOR AMPACITY
= (TOTAL INV O/P CURRENT) x 1.25 ...NEC 690.8(A)(1)(E) AND NEC 690.8(B)(1)
= 32 x 1.25
= 40.00 A .....SELECTED CONDUCTOR - #8 THWN-2 ....NEC 310.16 AND 240.4(D)(7)

2B) AFTER LOAD CENTER

TEMPERATURE DERATE FACTOR - 0.96
GROUPING FACTOR - 1

CONDUCTOR AMPACITY
= (TOTAL INV O/P CURRENT) x 1.25 ...NEC 690.8(A)(1)(E) AND NEC 690.8(B)(1)
= 2X32 x 1.25
= 80.00 A .....SELECTED CONDUCTOR - #4 THWN-2 ....NEC 310.16 AND 240.4(D)(7)

2) PV OVERCURRENT PROTECTION .....NEC 690.9(B)

= (TOTAL INV O/P CURRENT) x 1.25
= 2X32 x 1.25
= 80.00 A
SELECTED OCPD IS 80A

SELECTED EQUIPMENT GROUNDING CONDUCTOR (EGC) = #8THWN-2 ...NEC 250.122

GENERAL ELECTRICAL NOTES:

1. THE DC AND AC CONNECTORS OF TESLA- 1538000-XX-Y 7.6 INVERTER ARE LISTED TO MEET REQUIREMENTS AN EQUIPMENT DISCONNECTING MEANS SHALL BE PERMITTED TO BE REMOTE FROM THE EQUIPMENT WHERE THE EQUIPMENT DISCONNECTING MEANS CAN BE REMOTELY OPERATED FROM WITHIN 3 M (10 FT) OF THE EQUIPMENT BY NEC 690.15(A).
2. MCI-2 BRANCH CIRCUIT CONDUCTORS ARE MANUFACTURED PV WIRE LISTED . THEY ARE ROHS, OIL RESISTANT, AND UV RESISTANT. THEY CONTAIN 10 AWG CONDUCTORS OF TYPE THHN/THWN-2 DRY/WET AND CERTIFIED TO UL3003 AND UL 9703. THE CABLE'S DOUBLE INSULATED RATING REQUIRES NO NEUTRAL OR GROUNDED CONDUCTOR.
3. ALL METAL ENCLOSURES, RACEWAYS, CABLES AND EXPOSED NONCURRENT-CARRYING METAL PARTS OF EQUIPMENT SHALL BE GROUNDED TO EARTH AS REQUIRED BY NEC 250.4(B) AND PART III OF NEC ARTICLE 250 AND EQUIPMENT GROUNDING CONDUCTORS SHALL BE SIZED ACCORDING TO NEC 690.45. THE GROUNDING ELECTRODE SYSTEM SHALL ADHERE TO 690.47(A).
4. PV SYSTEM DISCONNECT SHALL BE READILY ACCESSIBLE.
5. POINT-OF-CONNECTION SHALL BE MADE IN COMPLIANCE WITH NEC 705.11 or 705.12
6. UTILITY HAS 24-HR UNRESTRICTED ACCESS TO ALL PHOTOVOLTAIC SYSTEM COMPONENTS LOCATED AT THE SERVICE ENTRANCE.
7. MODULES CONFORM TO AND ARE LISTED UNDER UL 1703, UL 61730 , 61730-1 AND 61730-2. OPTIMIZERS CONFORM TO AND ARE LISTED UNDER UL 1741 AND IEEE 1547 - 2018.
8. CONDUCTORS EXPOSED TO SUNLIGHT SHALL BE LISTED AS SUNLIGHT RESISTANT PER NEC ARTICLE 300.6(C)(1) AND ARTICLE 310.10 (D).
9. CONDUCTORS EXPOSED TO WET LOCATIONS SHALL BE SUITABLE FOR USE IN WET LOCATIONS PER NEC ARTICLE 310.10 (C).
10. LINE SIDE TAP DISCONNECTS MUST BE LOCATED NO MORE THAN 10 FEET FROM THE TAP POINT PER NEC 690.15(A)
11. ALL PHOTOVOLTAIC SYSTEM DC CIRCUITS RAN INSIDE OR ON ALL BUILDINGS AND STRUCTURES SHALL BE ENCLOSED IN METALLIC CONDUIT IN COMPLIANCE WITH NEC 690.31(D). THIS REQUIREMENT SHALL APPLY TO OPTIMIZER-BASED SYSTEMS, BUT SHALL NOT APPLY TO OPTIMIZER-BASED SYSTEMS.
12. A 10 AWG COPPER EQUIPMENT GROUNDING CONDUCTOR SIZED IN ACCORDANCE WITH NEC 690.45 SHALL BE USED TO BOND RAILS AND OTHER ROOFTOP EQUIPMENT. THE CONDUCTOR SHALL BE PROTECTED FROM PHYSICAL DAMAGE IN ACCORDANCE WITH NEC 250.120(C) BY RUNNING WITHIN THE HOLLOW SPACE BENEATH THE SOLAR STRUCTURE OR BY RUNNING WITHIN AN IDENTIFIED RACEWAY OR CABLE ARMOR. IF THE EQUIPMENT GROUNDING CONDUCTOR IS UNPROTECTED FROM PHYSICAL DAMAGE AT ANY POINT IN ITS CONDUCTOR RUN THE CONDUCTOR SHALL BE INCREASED TO A MINIMUM OF 6 AWG COPPER IN ACCORDANCE WITH NEC 250.120(C).

GROUNDING NOTES:

PV MODULE AND RACKING GROUNDING AS PER APPROVED INSTALLATION PRACTICE AND IN LINE WITH MANUFACTURE'S GUIDELINES.

BUILDING DEPARTMENT SEAL STAMP

LORD & LAWRENCE CONSULTING ENGINEERS
CONTACT: (561) 660-5200
6801 LAKE WORTH ROAD SUITE 302
LAKE WORTH, FL 33467
FLORIDA REGISTRY# 33809

prosolar SYSTEMS
CONTACT: 888-462-5005
1100 W OAKLAND PARK BLVD,#8
WILTON MANORS, FL 33311
SOLAR CONTRACTOR LICENSE: CVC57028

VANMEC, ALEX

806 JANN AVE,
OPA-LOCKA, FL 33054
25.907862, -80.254127

SIGNATURE WITH SEAL

KIMANDY LAWRENCE
LICENSE
No. 83317
STATE OF FLORIDA
PROFESSIONAL ENGINEER

6/4/24

ELECTRICAL CALCULATIONS

PV-4

CAUTION:MULTIPLE SOURCES OF POWER

POWER TO THIS SERVICE IS ALSO SUPPLIED FROM THE FOLLOWING SOURCES WITH THE DISCONNECTS LOCATED AS SHOWN

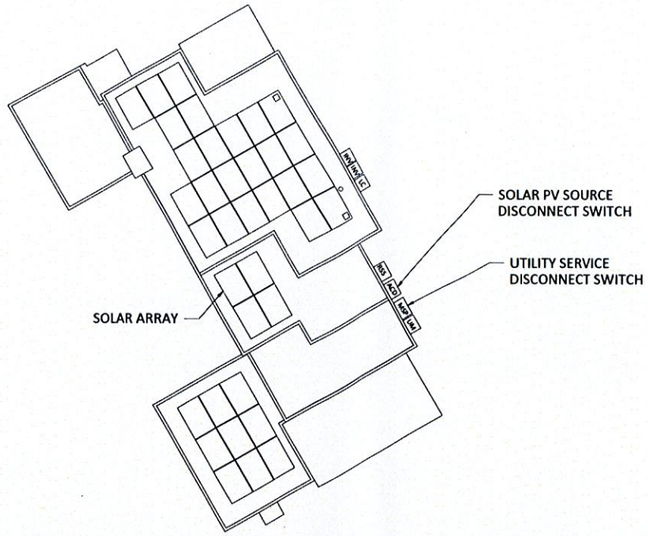

SITE-SPECIFIC DIRECTORY PLACARD(S) SHALL BE INSTALLED AT THE FOLLOWING LOCATION(S):
UTILITY SERVICE DISCONECT SWITCH (MSP) AND SOLAR PV SOURCE DISCONNECT SWITCH (ACD)
NEC 2020 EDITION 705.10

SOLAR AC DISCONNECT

NOTICE

RAPID SHUTDOWN SWITCH
FOR SOLAR PV SYSTEM

NEC 2020 EDITION 690.56(C)(2)

SOLAR PV SYSTEM IS EQUIPPED WITH RAPID SHUTDOWN

TURN RAPID SHUTDOWN SWITCH TO THE "OFF" POSITION TO SHUTDOWN PV SYSTEM AND REDUCE SHOCK HAZARD IN THE ARRAY

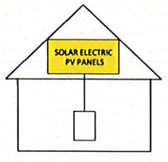

NEC 2020 EDITION 690.56(C)

EMERGENCY RESPONDER: THIS SOLAR PV SYSTEM IS EQUIPPED WITH RAPID SHUTDOWN

TURN RAPID SHUTDOWN SWITCH TO THE "OFF" POSTION TO SHUTDOWN ENTIRE PV SYSTEM.

FLORIDA FIRE PREVENTION CODE EIGHTH EDITION 11.12.2.1.1.1.1
NFPA 1 2021 EDITION 11.12.2.1.1.1.1 AND FIGURE A.11.12.2.1.1.1.1(a)

LOAD CENTER

NOTICE

LOAD CENTER AND DATA ACQUISITION FOR SOLAR PV SYSTEM ONLY.
DO NOT ADD LOADS.

STRING INVERTER (FOR BOTH)

WARNING

AC VOLTAGE : 240V

MAX. CURRENT: 32 A

EMERGENCY CONTACT

PROSOLAR SYSTEMS
(888) 462-5005

FLORIDA FIRE PREVENTION CODE EIGHTH EDITION 11.12.2.1.5

DC CONDUIT

WARNING

PHOTOVOLTAIC POWER SOURCE

DISPLAYED EVERY 10 FEET, NEC 2020 EDITION 690.31(G)(3)

NOTES:
1.THE MATERIAL USED FOR THE PHOTOVOLTAIC SYSTEM LABELS SHALL BE REFLECTIVE, WEATHER RESISTANT, AND CONSTRUCTED OF DURABLE ADHESIVE MATERIAL OR ANOTHER APPROVED MATERIAL SUITABLE FOR THE ENVIRONMENT IN COMPLIANCE WITH NFPA 1-11.12.
2. FONT, TEXT HEIGHT , CAPITALIZATION , FONT COLOR(S), BACKGROUND COLOR(S), DIAGRAM COLOR(S)AND CONTEXT OF PHOTOVOLTAIC SYSTEMS LABELS SHALL COMPLY WITH NFPA 1-11.12 AND NEC 2020 690.56 AS APPLICABLE FOR THE PHOTOVOLTAIC SYSTEM TO BE INSTALLED.

BUILDING DEPARTMENT SEAL STAMP

LORD & LAWRENCE
CONSULTING ENGINEERS
CONTACT: (561) 660-5200
6801 LAKE WORTH ROAD SUITE 302
LAKE WORTH, FL 33467
FLORIDA REGISTRY# 33809

prosolar SYSTEMS
CONTACT: 888-462-5005
1100 W OAKLAND PARK BLVD,#8
WILTON MANORS, FL 33311
SOLAR CONTRACTOR LICENSE: CVC57028

VANMEC, ALEX

806 JANN AVE,
OPA-LOCKA, FL 33054
25.907862, -80.254127

SIGNATURE WITH SEAL

KIMANDY LAWRENCE
LICENSE
No. 83317
STATE OF FLORIDA
PROFESSIONAL ENGINEER

6/4/24

LABELS
PV-5

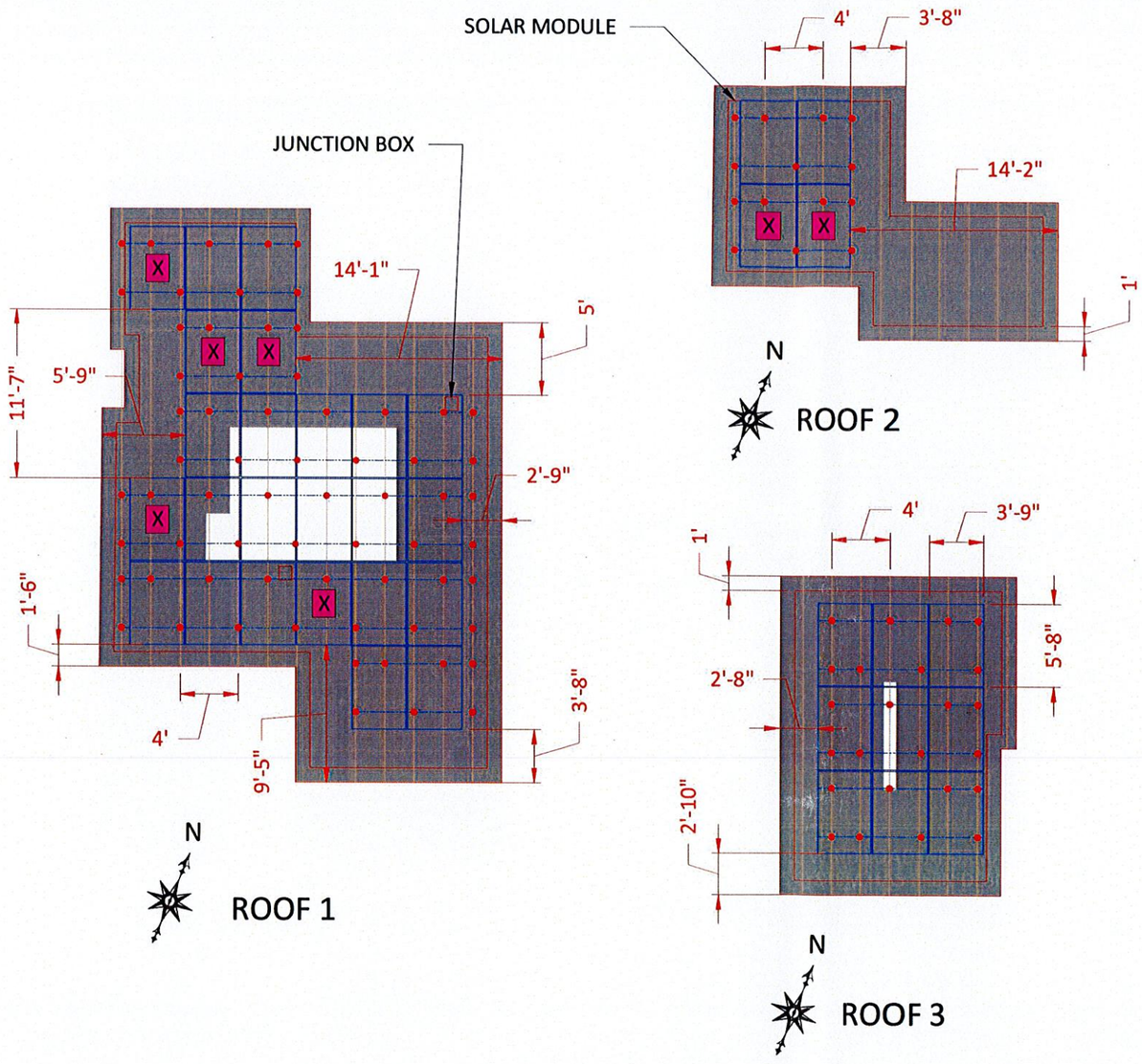

EQUIPMENT SPECIFICATIONS		
EQUIPMENT	DESCRIPTION	QUANTITY
MODULE	BSM415M10-54HPH(415W) BLUESUN SOLAR MODULES	37
INVERTER	TESLA- 1538000-XX-Y 7.6 INVERTER	2
RSD	TESLA MCI-2	13
JUNCTION BOX	GENERIC, NEMA 3R	2
LOAD CENTER	125A LOAD CENTER 120/240V NEMA 3R	1
AC DISCONNECT	AC DISCONNECT 240V, 100 AMP FUSED WITH 80 AMP FUSES, NEMA 3R, UL LISTED	1
ATTACHMENT FOR LOW SLOPE ROOF	QUICKMOUNT (QMLSH)	104
RACKING SYSTEM	IRONRIDGE (XR100) RAILS	-

ROOF INFORMATION			
ROOF	QUANTITY	SLOPE	AZIMUTH
ROOF 1	24	4.6°(1/12)	150°
ROOF 2	04	4.6°(1/12)	150°
ROOF 3	09	4.6°(1/12)	150°

ROOF SPECIFICATIONS	
ROOF MATERIAL	FLAT MODIFIED BITUMEN
ROOF CONDITION	GOOD
TRUSSES	2"x4"@24" O.C.

SYSTEM INFORMATION	
DC SYSTEM SIZE	15.36KW
AC SYSTEM SIZE	15.2KW

NOTES:
1. LOCATION OF JUNCTION BOX(ES), AC DISCONNECTS(S), AC COMBINER PANEL(S), AND OTHER ELECTRICAL EQUIPMENT(S) RELEVANT TO PV INSTALLATION SUBJECT TO CHANGE BASED ON SITE CONDITIONS.
2. TRUSS LOCATIONS ARE APPROXIMATE. ACTUAL LOCATIONS MAY DIFFER AND CONTRACTOR MAY NEED TO ADJUST MOUNT LOCATIONS. IN NO CASE SHALL THE MOUNT SPACING EXCEED "MAX. MOUNT SPACING"

LEGENDS
- PV ROOF ATTACHMENT
- RAILS
- RAFTERS/TRUSSES
- ROOF OBSTRUCTION
- JUNCTION BOX
- FIRE SETBACK
- EXPOSED MODULE

LEGENDS
- WIND ZONE 1
- WIND ZONE 1'

WIND ZONE 2
- WIND ZONE (2)

WIND ZONE 3
- WIND ZONE (3)

WIND LOAD INFORMATION:
THIS SYSTEM HAS BEEN DESIGN TO MEET THE REQUIREMENTS OF THE 8TH EDITION OF THE FLORIDA BUILDING CODE AND USED THE FOLLOWING DESIGN PARAMETERS:
ULTIMATE WIND SPEED: 175 MPH
EXPOSURE CATEGORY: C
RISK CATEGORY: II
MEAN ROOF HEIGHT: 12 FT
ROOF SLOPE: 0°-7°

BUILDING DEPARTMENT SEAL STAMP

LORD & LAWRENCE CONSULTING ENGINEERS
CONTACT: (561) 660-5200
6801 LAKE WORTH ROAD SUITE 302
LAKE WORTH, FL 33467
FLORIDA REGISTRY# 33809

prosolar SYSTEMS
CONTACT: 888-462-5005
1100 W OAKLAND PARK BLVD,#8
WILTON MANORS, FL 33311
SOLAR CONTRACTOR LICENSE: CVC57028

VANMEC, ALEX

806 JANN AVE,
OPA-LOCKA, FL 33054
25.907862, -80.254127

SIGNATURE WITH SEAL

KIMANDY LAWRENCE
LICENSE
No. 83317
STATE OF FLORIDA
PROFESSIONAL ENGINEER

6/6/24

RACKING LAYOUT
PV-6

NOTE:
MAX. RAIL CANTILIVER SHALL BE 16 INCHES (L/3) PER APPROVAL DETAILS ON SHEET 1/9 of XR-QB FROM FL PRODUCT APPROVAL FL41858.4

I CERTIFY THAT THE EXISTING ROOF AND BUILDING STRUCTURE CAN WITHSTAND ALL DEAD LOADS IMPOSED BY THE PHOTOVOLTAIC SYSTEM AND ALL WIND LOADS OF SPECIFIED INTENSITY IN ACCORDANCE WITH THE FLORIDA BUILDING CODE.

NOTE:
1.QUICK MOUNT QMLSH IS SEALED USING A 3-COURSE METHOD CONSISTING OG GAF FLEX SEAL AND HYDROSTOP FABRIC.
2. H2 IS EQUAL OR LESS THAN 6 INCHES

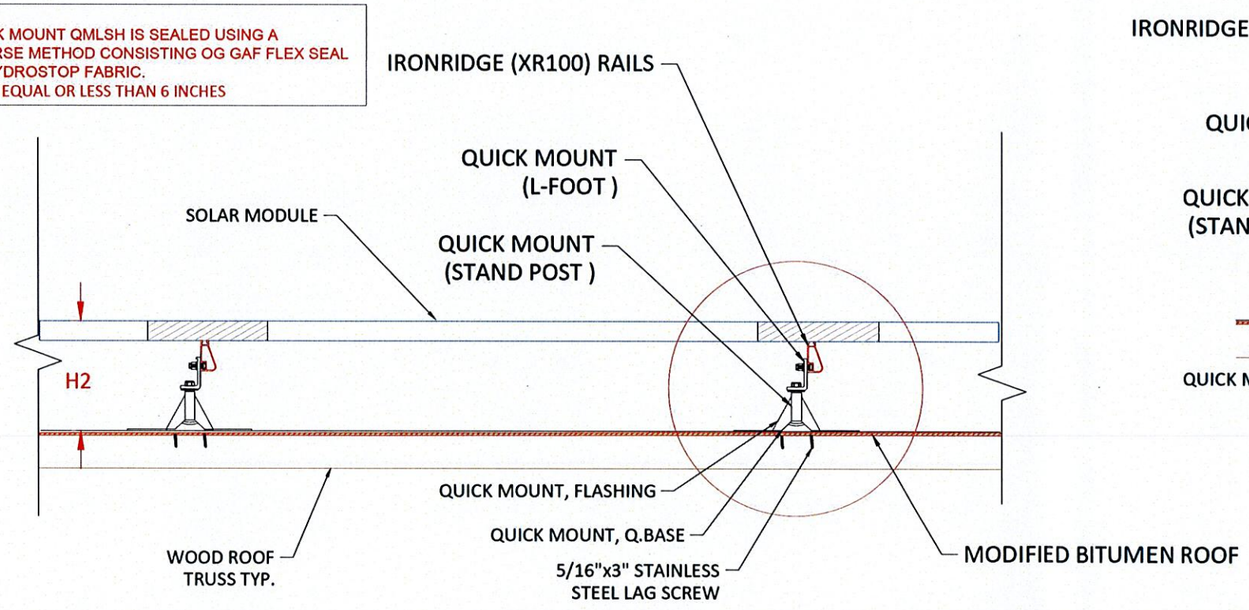

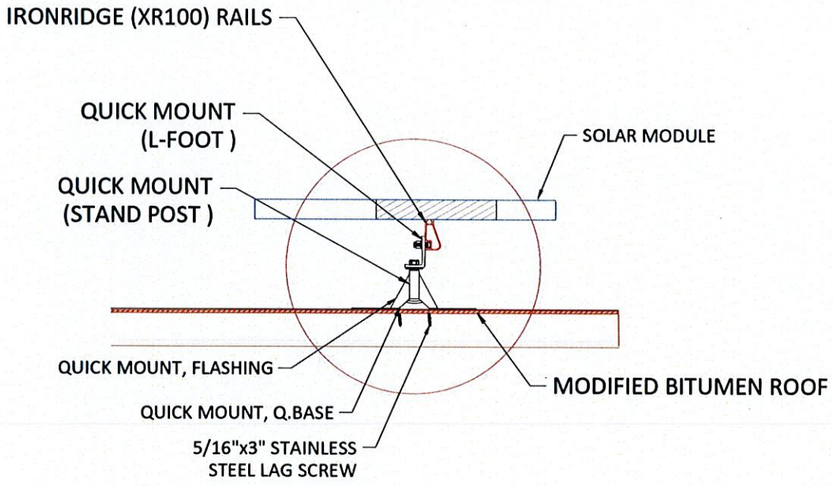

BUILDING DEPARTMENT SEAL STAMP

LORD & LAWRENCE
CONSULTING ENGINEERS
CONTACT: (561) 660-5200
6801 LAKE WORTH ROAD SUITE 302
LAKE WORTH, FL 33467
FLORIDA REGISTRY# 33809

prosolar SYSTEMS
CONTACT: 888-462-5005
1100 W OAKLAND PARK BLVD,#8
WILTON MANORS, FL 33311
SOLAR CONTRACTOR LICENSE: CVC57028

VANMEC, ALEX

806 JANN AVE,
OPA-LOCKA, FL 33054
25.907862, -80.254127

SIGNATURE WITH SEAL

KIMANDY LAWRENCE LICENSE No. 83317 STATE OF FLORIDA PROFESSIONAL ENGINEER

6/20/24

STRUCTURAL DETAILS

PV-7

WIND LOAD CALCULATIONS FOR MODULES INSTALLED ON ROOFS WITH A HEIGHT LESS THAN 60'
BASED ON ASCE 7-22 AND FBC 2023, 8TH EDITION, CHAPTER 16, HVHZ

SITE INFORMATION

BUILDING CODE VERSION	2023 FLORIDA BUILDING CODE	RISK CATEGORY	II	
MEAN ROOF HEIGHT (ft)	12	EXPOSURE CATEGORY	C	PITCH
LEAST HORIZONTAL DIMENSION (ft)	45	ROOF SLOPE (°)	4.8	1 / 12
PARAPET HEIGHT (ft)	0	ROOF TYPE	LOW SLOPE	
MODULE	BlueSun BSMxxxM10-54HPH	ULTIMATE WIND SPEED	175 mph	
MODULE LENGTH (in)	67.80	NOMINAL WIND SPEED	136 mph	
MODULE WIDTH (in)	44.65	K_D	0.85	
MODULE DEPTH (mm)	30	K_{ZT}	1.00	
MODULE DEPTH (in)	1.18	K_z	0.85	
MODULE VERTICAL AREA = A_E (ft^2)	21.02	K_e	1.00	
MODULE HORIZONTAL AREA = A_h (ft^2)	0.56	γ_E	1.0 OR 1.5	
HIGH VELOCITY HURRICANE ZONE?	YES	γ_a	0.67	
RACKING SYSTEM	IRONRIDGE: XR100			
MIN. MODULE SPACING (in)	0.37			

DESIGN CALCULATIONS PER ASCE 7-22 SECTION 29.4.4

VELOCITY PRESSURE (q_h) = $.00256*K_zK_{ZT}K_DV^2$ — VELOCITY PRESSURE (ASD) = 33.9 psf

WIDTH OF PRESSURE COEFFICIENT	45' * 10%	=	4.5'	ZONE WIDTH 'a'	4.5FT
	12' * 40%	=	4.8'		
EXTERNAL PRESSURE COEFFICIENT					
	Zone 1'	0.57	-0.9		
	Zone 1	0.57	-1.57		
	Zone 2	0.57	-2.13		
	Zone 3	0.57	-2.86		

DESIGN PRESSURES

	EDGE OR EXPOSED MODULES?	DOWN	UP NORMAL	UP EDGE/EXPOSED	
Zone 1'	YES	19.4	-20.4	-30.5	(psf)
Zone 1	YES	19.4	-35.4	-53.2	(psf)
Zone 2	YES	19.4	-48.2	-72.2	(psf)
Zone 3	NO	19.4	-64.6	-64.6	(psf)

MODULE ALLOWABLE PRESSURE **75.0** psf

RAILS

RAILS PER MODULE	2-RAIL SYSTEM		
RAIL ORIENTATION	PORTRAIT		
PV SYSTEM TOTAL WEIGHT		1968.51	(lb)
PV SYSTEM DISTRIBUTED WEIGHT		2.5	(psf)

ATTACHMENTS

ATTACHMENT TYPE	QUICKMOUNT QBASE LOW SLOPE POST			
NOMINAL RAFTER SPACING	24" O.C.			
	NORMAL MODULES		EDGE/EXPOSED MODULES	
MAX DISTANCE BETWEEN ATTACHMENTS ZONE 1'	48.0		48.0	(in)
MAX UPLIFT FORCE PER ATTACHMENT IN ZONE 1'	230.0		345.0	(lb)
MAX DISTANCE BETWEEN ATTACHMENTS ZONE 1	48.0		48.0	(in)
MAX UPLIFT FORCE PER ATTACHMENT IN ZONE 1	400.5		600.7	(lb)
MAX DISTANCE BETWEEN ATTACHMENTS ZONE 2	48.0		48.0	(in)
MAX UPLIFT FORCE PER ATTACHMENT IN ZONE 2	544.1		816.2	(lb)
MAX DISTANCE BETWEEN ATTACHMENTS ZONE 3	48.0		48.0	(in)
MAX UPLIFT FORCE PER ATTACHMENT IN ZONE 3	730.4		730.4	(lb)
ALLOWABLE UPLIFT FORCE PER ATTACHMENT	1010.0	(lb)		
MIN. LAG PENETRATION INTO TRUSS	2.50	(in)	*WITHDRAWAL = 8100*G^(3/2)*D^(3/4)*L*	
SCREW WITHDRAWAL RESISTANCE	2302	(lb)	*G = Specific gravity of wood (0.55 for Southern Pine)*	
MAX LATERAL FORCE PER ATTACHMENT	36	(lb)	*L = Depth of penetration*	
ALLOWABLE LATERAL FORCE PER ATTACHMENT	657	(lb)	*D = Diameter of lag screw*	
ALLOWABLE UPLIFT PER MID/END CLAMP	945.5	(lb)		

NOTES

1. MODULE ALLOWABLE WIND PRESSURE OBTAINED FROM MANUFACTURER DATASHEET.
2. SEE ATTACHMENT PLAN FOR ACTUAL ATTACHMENT SPACING IN EACH ZONE
3. HVHZ DEFINED AS MIAMI-DADE AND BROWARD COUNTIES
4. LAG SCREW WITHDRAWAL RESISTANCE OBTAINED FROM THE USDA WOOD HANDBOOK, WOOD AS AN ENGINEERING MATERIAL.
5. ROOF TRUSSES ARE #2 SOUTHERN YELLOW PINE
6. USE INCLUDED 5/16" x 3" LAG SCREWS TO SECURE MOUNT TO CENTER OF EACH TRUSS. MINIMUM SCREW PENETRATION ITO TRUSS IS 2.5" USE TWO SCREWS PER ATTACHMENT.
7. RAIL SPANS OBTAINED FROM MANUFACTURER'S PUBLISHED DATA.
8. ANY EDGE AND/OR EXPOSED MODULES PRESENT IN PROPOSED INSTALLATION WHERE ANY WIND ZONE'S DESIGN PRESSURE EXCEEDS THE MODULE ALLOWABLE PRESSURE SHALL BE VERIFIED WITH WEIGHTED AVERAGE PRESSURE CALCULATIONS RESPECTIVE TO EACH MODULE CASE, AS APPLICABLE.

BUILDING DEPARTMENT SEAL STAMP

LORD & LAWRENCE CONSULTING ENGINEERS
CONTACT: (561) 660-5200
6801 LAKE WORTH ROAD SUITE 302
LAKE WORTH, FL 33467
FLORIDA REGISTRY# 33809

prosolar SYSTEMS
CONTACT: 888-462-5005
1100 W OAKLAND PARK BLVD,#8
WILTON MANORS, FL 33311
SOLAR CONTRACTOR LICENSE: CVC57028

VANMEC, ALEX

806 JANN AVE,
OPA-LOCKA, FL 33054
25.907862, -80.254127

SIGNATURE WITH SEAL

AMANDY LAWRENCE LICENSE No. 83317 STATE OF FLORIDA PROFESSIONAL ENGINEER

6/4/26

WIND LOAD CALCULATIONS

PV-8

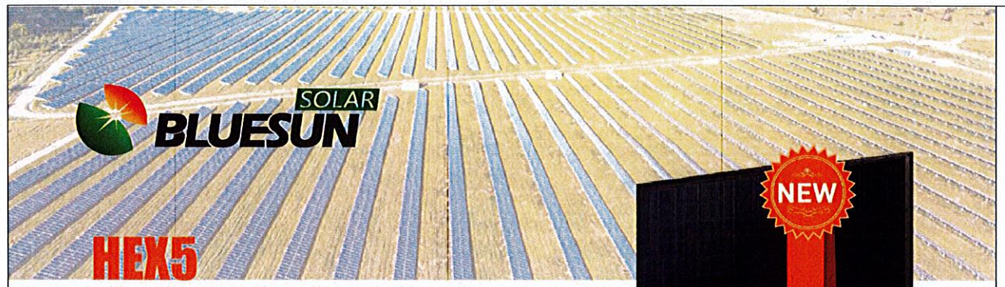

BSM415M10-54HPH

182 Bifacial Module With Transparent Backsheet
10BB Half-cut Mono Perc

Made In Thailand

- Long Beach Stock
- US Local Service
- Same Day Shipping

- Dimensions:1722*1134*30mm
- Weight:21.5kg
- Max. System Voltage: 1000V/1500 V (IEC/UL)

PERFORMANCE WARRANTY

25 Years — Enhanced Product Warranty on Materials and Workmanship*

30 Years — Linear Power Performance Warranty*
*According to the applicable Bluesun Solar Limited Warranty Statement.

GREAT PERFORMANCE AND RELIABILITY

★ **10BB Half-cut Cell Technology**
New circuit design, lower internal current, lower Rs loss
Ga dopped wafer, attenuation < 2% (1st year) / ≤0.55% (Linear)

★ **Industry Leading High Yield**
Bifacial PERC cell technology,
5%-25% more yield depends on different conditions

★ **Excellent Anti-PID Performance**
2 times of industry standard Anti-PID test by TUV SUD

★ **Lower LCOE**
2% more power generation, lower LCOE

★ **IP68 Junction Box**
High waterproof level

MANAGEMENT SYSTEM CERTIFICATES

- ISO 9001: 2015 Quality Management System
- ISO 14001: 2015 Environment Management System
- ISO 45001: 2018 Occupational Health and Safety Management Systems

PRODUCT CERTIFICATES

- IEC 61215 / IEC 61730 / UL 61730

BLUESUN SOLAR CO.,LTD
Add:1499 Zhenxing Road, Shushan District,230031 Hefei,China
Tel:+86 (158) 5821 3997 Fax:+86 (551) 6565 2651
E-mail:info@bluesunpv.com Http://www.bluesunpv.com
US Warehouse Location: Long Beach, Chicago, New Jersey Etc

ELECTRICAL CHARACTERISTICS

Testing Condition	STC	NMOT	STC	NMOT	STC	NMOT	STC	NMOT	STC	NMOT
Maximum Power (Pmax/W)	400	298	405	302	410	306	415	309	420	313
Operating Voltage (Vmpp/V)	31.05	29.0	31.24	29.2	31.43	29.3	31.63	29.5	31.82	29.7
Operating Current (Impp/A)	12.89	10.30	12.97	10.36	13.05	10.42	13.13	10.49	13.21	10.55
Open-Circuit Voltage (Voc/V)	37.00	34.8	37.25	35.1	37.50	35.3	37.75	35.6	38.00	35.8
Short-Circuit Current (Isc/A)	13.78	11.11	13.86	11.17	13.94	11.24	14.02	11.31	14.10	11.38
Module Efficiency (%)	20.50		20.70		21.00		21.25		21.51	

STC: Irradiance 1000W/m², Spectra at AM1.5, Module Temperature 25℃.Power output tolerance: 0~+5W, Test uncertainty for Pmax : ±3%
NMOT: Irradiance 800W/m², Spectra at AM1.5, Ambient Temperature 20 ℃, Wind speed 1m/s

MECHANICAL CHARACTERISTICS

Solar Cell	Monocrystalline182*182mm
No. of Cells	108 (6*18)
Module Dimensions	1722*1134*30mm (67.80*44.65*1.18inches)
Weight	21.5kg (47.4lbs.)
Front Glass	3.2mm AR Coating Tempered Glass
Frame	Anodized Aluminium Alloy
Junction Box	IP68, 3 Bypass Diodes
Output Cables	4mm² (IEC), 12AWG(UL) 300mm in Length or Customized Length
Connectors	T01/LJQ-3-CSY/MC4/MC4-EVO2

I-V CURVE

TP7G54M/410W

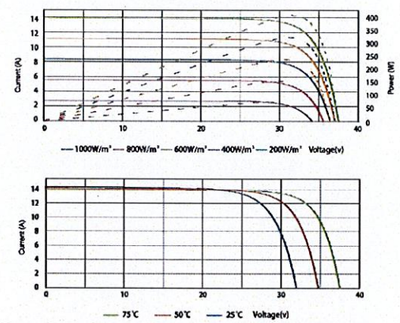

APPLICATION CONDITIONS

Maximun System Voltage	1000V/1500VDC/(IEC)
Operating Temperature	-40°C~+85°C
Maximun Series Fuse	25A
Safety Protection Class	Class II
Mechanical Load	Front side 5400Pa, Back side 4000Pa
Refer. Bifaciality Factor	70%(+5%~-10%)

TECHNICAL DRAWINGS

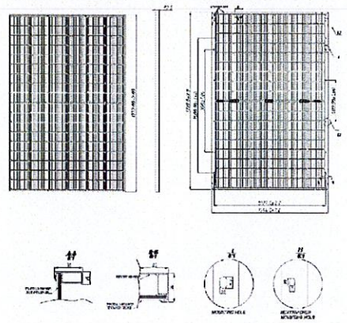

TEMPERATURE CHARACTERISTICS

Temperature Coefficient of Pmax	-0.35%/°C
Temperature Coefficient of Voc	-0.26%/°C
Temperature Coefficient of Isc	+0.048%/°C
Nominal Module Operating Temperature(NMOT)	43±2°C

PACKING CONFIGURATION

Pieces Per Pallet	31
Pieces Per Container(40'HQ)	806

BLUESUN SOLAR CO.,LTD
Add:1499 Zhenxing Road, Shushan District,230031 Hefei,China
Tel:+86 (158) 5821 3997 Fax:+86 (551) 6520 3660
E-mail:info@bluesunpv.com Http://www.bluesunpv.com
US Warehouse Location: Long Beach, Chicago, New Jersey Etc

BUILDING DEPARTMENT SEAL STAMP

LORD & LAWRENCE CONSULTING ENGINEERS
CONTACT: (561) 660-5200
6801 LAKE WORTH ROAD SUITE 302
LAKE WORTH, FL 33467
FLORIDA REGISTRY# 33809

prosolar SYSTEMS
CONTACT: 888-462-5005
1100 W OAKLAND PARK BLVD,#8
WILTON MANORS, FL 33311
SOLAR CONTRACTOR LICENSE: CVC57028

VANMEC, ALEX

806 JANN AVE,
OPA-LOCKA, FL 33054
25.907862, -80.254127

SIGNATURE WITH SEAL

MODULE DATASHEET
PV-9

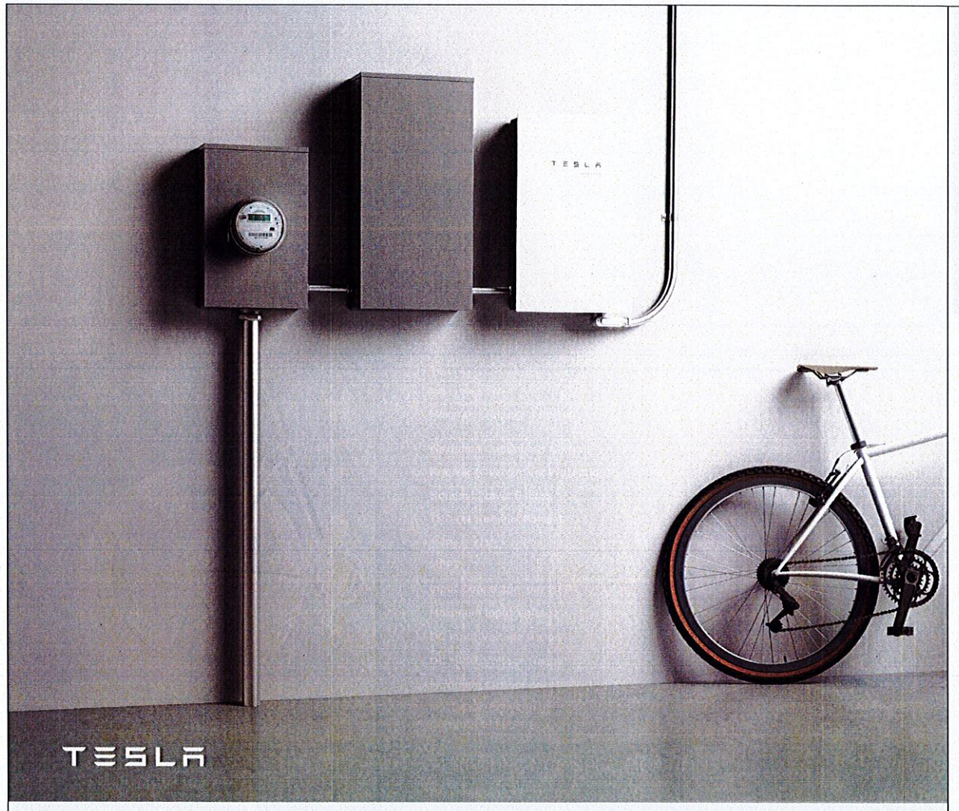

SOLAR INVERTER

3.8 kW | 7.6 kW

Tesla Solar Inverter completes the Tesla home solar system, converting DC power from solar to AC power for home consumption. Tesla's renowned expertise in power electronics has been combined with robust safety features and a simple installation process to produce an outstanding solar inverter that is compatible with both Solar Roof and traditional solar panels. Once installed, homeowners use the Tesla mobile app to manage their solar system and monitor energy consumption, resulting in a truly unique ecosystem experience.

KEY FEATURES

- Built on Powerwall 2 technology for exceptional efficiency and reliability
- Wi-Fi, Ethernet, and cellular connectivity with easy over-the-air updates
- Designed to integrate with Tesla Powerwall and Tesla App
- 3.8 kW and 7.6 kW models available

SOLAR INVERTER

Tesla Solar Inverter provides DC to AC conversion and integrates with the Tesla ecosystem, including Solar Panels, Solar Roof, Powerwall, and vehicle charging, to provide a seamless sustainable energy experience.

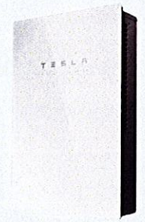

KEY FEATURES

- Integrated rapid shutdown, arc fault, and ground fault protection
- No neutral wire simplifies installation
- 2x the standard number of MPPTs for high production on complex roofs

ELECTRICAL SPECIFICATIONS

OUTPUT (AC)	3.8 kW	7.6 kW
Nominal Power	3,800 W	7,600 W
Maximum Apparent Power	3,328 VA at 208 V 3,840 VA at 240 V	6,656 VA at 208 V 7,680 VA at 240 V
Maximum Continuous Current	16 A	32 A
Breaker (Overcurrent Protection)	20 A	40 A
Nominal Power Factor	1 - 0.85 (leading / lagging)	
THD (at Nominal Power)	<5%	
INPUT (DC)		
MPPT	2	4
Input Connectors per MPPT	1-2	1-2-1-2
Maximum Input Voltage	600 VDC	
DC Input Voltage Range	60 - 550 VDC	
DC MPPT Voltage Range[1]	60 - 480 VDC	
Maximum Current per MPPT (I_{mp})	11 A	
Maximum Short Circuit Current per MPPT (I_{sc})	15 A	

PERFORMANCE SPECIFICATIONS

Peak Efficiency[2]	97.5%	98.0%
CEC Efficiency[3]	97.5%	
Allowable DC/AC Ratio	1.4	
Customer Interface	Tesla Mobile App	
Internet Connectivity	Wi-Fi (2.4 GHz, 802.11 b/g/n), Ethernet, Cellular (LTE/4G)[3]	
AC Remote Metering Support	Wi-Fi (2.4 GHz, 802.11 b/g/n), RS-485	
Protections	Integrated arc fault circuit interrupter (AFCI), Rapid Shutdown	
Supported Grid Types	60 Hz, 240 V Split Phase 60 Hz, 208 V Wye	
Required Number of Tesla Solar Shutdown Devices per Solar Module	See *Solar Shutdown Device Requirements per Module* on page 3	
Warranty	12.5 years	

[1]Maximum current.
[2]Expected efficiency pending final CEC listing.
[3]Cellular connectivity subject to network operator service coverage and signal strength.

MECHANICAL SPECIFICATIONS

Dimensions	650 mm x 411 mm x 158 mm (26 in x 16 in x 6 in)
Weight	52 lb[4]
Mounting options	Wall mount (bracket)

[4]Door and bracket can be removed for a mounting weight of 37 lb.

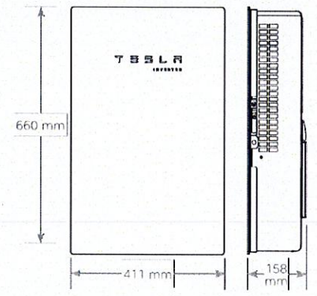

ENVIRONMENTAL SPECIFICATIONS

Operating Temperature[5]	-30°C to 45°C (-22°F to 113°F)
Operating Humidity (RH)	Up to 100%, condensing
Storage Temperature	-30°C to 70°C (-22°F to 158°F)
Maximum Elevation	3000 m (9843 ft)
Environment	Indoor and outdoor rated
Enclosure Rating	Type 3R
Ingress Rating	IP55 (Wiring compartment)
Pollution Rating	PD2 for power electronics and terminal wiring compartment, PD3 for all other components
Operating Noise @ 1 m	< 40 db(A) nominal, < 50 db(A) maximum

[5]For the 7.6 kW Solar Inverter, performance may be de-rated to 6.2 kW at 240 V or 5.37 kW at 208 V when operating at temperatures greater than 45°C.

COMPLIANCE INFORMATION

Grid Certifications	UL 1741, UL 1741 SA, IEEE 1547, IEEE 1547.1
Safety Certifications	UL 1699B, UL 1741, UL 1998 (US)
Emissions	EN 61000-6-3 (Residential), FCC 47CFR15.109 (a)

BUILDING DEPARTMENT SEAL STAMP

LORD & LAWRENCE CONSULTING ENGINEERS
CONTACT: (561) 660-5200
6801 LAKE WORTH ROAD SUITE 302
LAKE WORTH, FL 33467
FLORIDA REGISTRY# 33809

prosolar SYSTEMS
CONTACT: 888-462-5005
1100 W OAKLAND PARK BLVD,#8
WILTON MANORS, FL 33311
SOLAR CONTRACTOR LICENSE: CVC57028

VANMEC, ALEX

806 JANN AVE,
OPA-LOCKA, FL 33054
25.907862, -80.254127

SIGNATURE WITH SEAL

INVERTER DATASHEET

PV-10

Tesla Solar Inverter Technical Specifications

Mechanical Specifications

Dimensions	660 mm x 411 mm x 158 mm (26 in x 16 in x 6 in)
Weight	52 lb[4]
Mounting Options	Wall mount (bracket)

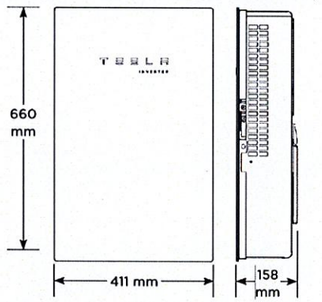

[4]Door and bracket can be removed for a mounting weight of 37 lb.

Environmental Specifications

Operating Temperature	-30°C to 45°C (-22°F to 113°F)[5]
Operating Humidity (RH)	Up to 100%, condensing
Storage Temperature	-30°C to 70°C (-22°F to 158°F)
Maximum Elevation	3000 m (9843 ft)
Environment	Indoor and outdoor rated
Enclosure Rating	Type 3R
Ingress Rating	IP55 (Wiring compartment)
Pollution Rating	PD2 for power electronics and terminal wiring compartment, PD3 for all other components
Operating Noise @ 1 m	< 40 db(A) nominal, < 50 db(A) maximum

[5]Performance may be de-rated to 6.2 kW at 240 V when operating at temperatures greater than 45°C.

Compliance Information

Grid Certifications	UL 1741, UL 1741 SA, UL 1741 SB, UL 1741 PCS, IEEE 1547-2018, IEEE 1547.1
Safety Certifications	UL 1741 PVRSS, UL 1699B, UL 1998 (US), UL 3741
Emissions	EN 61000-6-3 (Residential), FCC 47CFR15.109 (a)

Solar Shutdown Device Technical Specifications

The Solar Shutdown Device is a Mid-Circuit Interrupter (MCI) and is part of the PV system rapid shutdown (RSD) function in accordance with Article 690 of the applicable NEC. When paired with Tesla Solar Inverter, solar array shutdown is initiated by any loss of AC power.

Electrical Specifications

Model	**MCI-1**	**MCI-2**
Nominal Input DC Current Rating (I_{MP})	12 A	13 A
Maximum Input Short Circuit Current (I_{SC})	19 A	17 A
Maximum System Voltage (PVHCS)	600 V DC	1000 V DC[6]

[6]Maximum System Voltage is limited by Tesla Solar Inverter to 600 V DC.

RSD Module Performance

Maximum Number of Devices per String	5	5
Control	Power Line Excitation	Power Line Excitation
Passive State	Normally Open	Normally Open
Maximum Power Consumption	7 W	7 W
Warranty	25 years	25 years

Environmental Specifications

Operating Temperature	-40°C to 50°C (-40°F to 122°F)	-45°C to 70°C (-49°F to 158°F)
Storage Temperature	-30°C to 70°C (-22°F to 158°F)	-30°C to 70°C (-22°F to 158°F)
Enclosure Rating	NEMA 4X / IP65	NEMA 4X / IP65

Mechanical Specifications

Electrical Connections	MC4 Connector	MC4 Connector
Housing	Plastic	Plastic
Dimensions	125 x 150 x 22 mm (5 x 6 x 1 in)	173 x 45 x 22 mm (6.8 x 1.8 x 1 in)
Weight	350 g (0.77 lb)	120 g (0.26 lb)
Mounting Options	ZEP Home Run Clip M4 Screw (#10) M8 Bolt (5/16") Nail / Wood screw	Wire Clip

Compliance Information

Certifications	UL 1741 PVRSE, UL 3741, PVRSA (Photovoltaic Rapid Shutdown Array)
RSD Initiation Method	PV System AC Breaker or Switch

UL 3741 PV Hazard Control (and PVRSA) Compatibility

The following categories of solar module meet the UL 3741 PVHCS listing when installed with Tesla Solar Inverter and Solar Shutdown Devices.

Tesla Solar Roof	PV Hazard Control System: BIPV compliance document
Tesla or Hanwha (Q.Peak Duo BLK or BLK-G6+) Modules certified for use with ZEP racking	PV Hazard Control System: ZS PVHCS compliance document
Other module and racking combinations	PV Hazard Control System: Generic PV Array compliance document

BUILDING DEPARTMENT SEAL STAMP

LORD & LAWRENCE CONSULTING ENGINEERS
CONTACT: (561) 660-5200
6801 LAKE WORTH ROAD SUITE 302
LAKE WORTH, FL 33467
FLORIDA REGISTRY# 33809

prosolar SYSTEMS
CONTACT: 888-462-5005
1100 W OAKLAND PARK BLVD,#8
WILTON MANORS, FL 33311
SOLAR CONTRACTOR LICENSE: CVC57028

VANMEC, ALEX

806 JANN AVE,
OPA-LOCKA, FL 33054
25.907862, -80.254127

SIGNATURE WITH SEAL

INVERTER DATASHEET

PV-10.1

Datasheet

IRONRIDGE

Roof Mount System

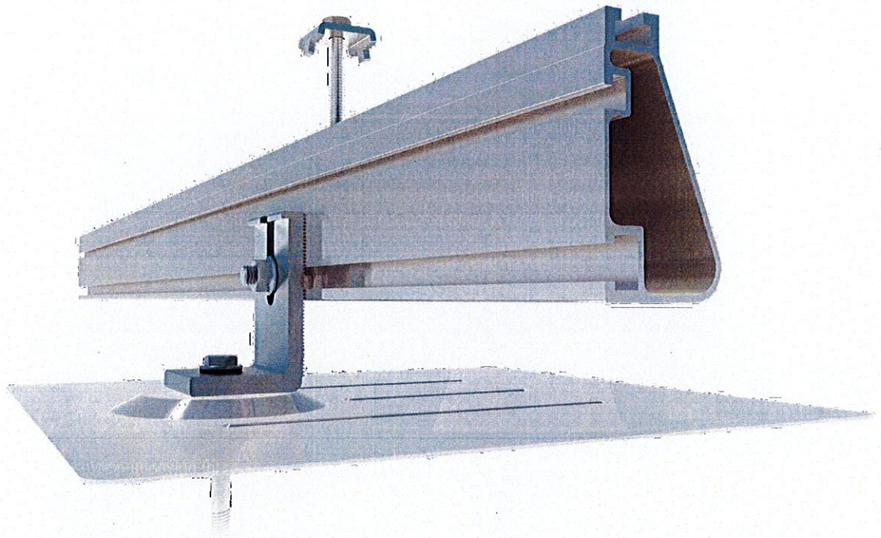

Built for solar's toughest roofs.

IronRidge builds the strongest roof mounting system in solar. Every component has been tested to the limit and proven in extreme environments.

Our rigorous approach has led to unique structural features, such as curved rails and reinforced flashings, and is also why our products are fully certified, code compliant and backed by a 20-year warranty.

Strength Tested
All components evaluated for superior structural performance.

PE Certified
Pre-stamped engineering letters available in most states.

Class A Fire Rating
Certified to maintain the fire resistance rating of the existing roof.

Design Software
Online tool generates a complete bill of materials in minutes.

Integrated Grounding
UL 2703 system eliminates separate module grounding components.

20 Year Warranty
Twice the protection offered by competitors.

Datasheet

XR Rails

XR10 Rail

A low-profile mounting rail for regions with light snow.

- 6' spanning capability
- Moderate load capability
- Clear & black anod. finish

XR100 Rail

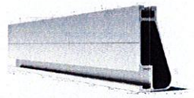

The ultimate residential solar mounting rail.

- 8' spanning capability
- Heavy load capability
- Clear & black anod. finish

XR1000 Rail

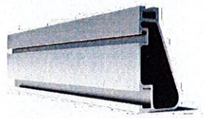

A heavyweight mounting rail for commercial projects.

- 12' spanning capability
- Extreme load capability
- Clear anodized finish

Internal Splices

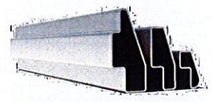

All rails use internal splices for seamless connections.

- Self-tapping screws
- Varying versions for rails
- Grounding Straps offered

Attachments

FlashFoot

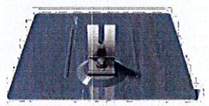

Anchor, flash, and mount with all-in-one attachments.

- Ships with all hardware
- IBC & IRC compliant
- Certified with XR Rails

Slotted L-Feet

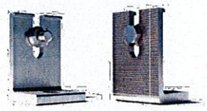

Drop-in design for rapid rail attachment.

- High-friction serrated face
- Heavy-duty profile shape
- Clear & black anod. finish

Standoffs

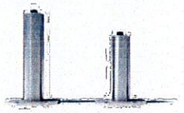

Raise flush or tilted systems to various heights.

- Works with vent flashing
- Ships pre-assembled
- 4" and 7" Lengths

Tilt Legs

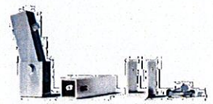

Tilt assembly to desired angle, up to 45 degrees.

- Attaches directly to rail
- Ships with all hardware
- Fixed and adjustable

Clamps & Grounding

End Clamps

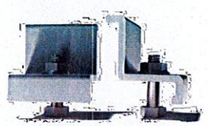

Slide in clamps and secure modules at ends of rails.

- Mill finish & black anod.
- Sizes from 1.22" to 2.3"
- Optional Under Clamps

Grounding Mid Clamps

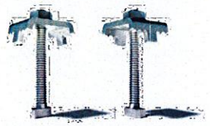

Attach and ground modules in the middle of the rail.

- Parallel bonding T-bolt
- Reusable up to 10 times
- Mill & black stainless

T-Bolt Grounding Lugs

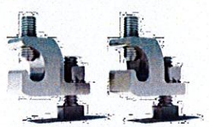

Ground system using the rail's top slot.

- Easy top-slot mounting
- Eliminates pre-drilling
- Swivels in any direction

Accessories

Provide a finished and organized look for rails.

- Snap-in Wire Clips
- Perfected End Caps
- UV-protected polymer

Free Resources

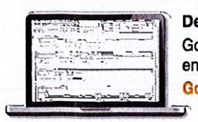

Design Assistant
Go from rough layout to fully engineered system. For free.
Go to IronRidge.com/rm

NABCEP Certified Training
Earn free continuing education credits, while learning more about our systems.
Go to IronRidge.com/training

© 2014 IronRidge, Inc. All rights reserved. Visit www.ironridge.com or call 1-800-227-9523 for more information. Version 1.42

BUILDING DEPARTMENT SEAL STAMP

LORD & LAWRENCE
CONSULTING ENGINEERS
CONTACT: (561) 660-5200
6801 LAKE WORTH ROAD SUITE 302
LAKE WORTH, FL 33467
FLORIDA REGISTRY# 33809

prosolar SYSTEMS
CONTACT: 888-462-5005
1100 W OAKLAND PARK BLVD,#8
WILTON MANORS, FL 33311
SOLAR CONTRACTOR LICENSE: CVC57028

VANMEC, ALEX

806 JANN AVE,
OPA-LOCKA, FL 33054
25.907862, -80.254127

SIGNATURE WITH SEAL

RACKING DATASHEET
PV-11

QBase Low Slope Mount | QMLSH

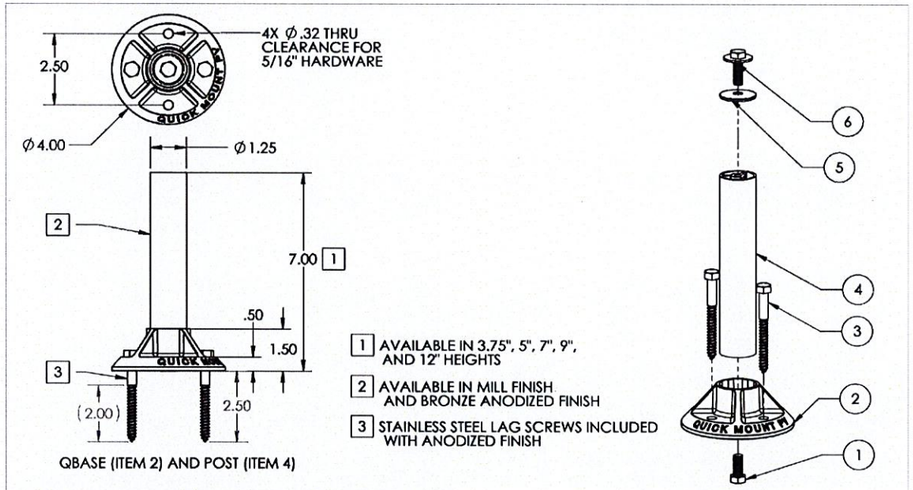

QBASE (ITEM 2) AND POST (ITEM 4)

ITEM NO.	DESCRIPTION	QTY.
1	CAP SCREW, HEX HEAD, 5/16"-18 X 3/4" UNC-2A, GRADE 8, MAGNI	1
2	QBASE, 1-1/4" ID, FOR 5/16" HARDWARE, A360 CAST AL	1
3	LAG SCREW, HEX HEAD, 5/16" X 3", ZINC	2
4	POST, 1.25" OD X 6.5", 6063-T5/6063-T6, MILL	1
5	WASHER, SEALING, 5/16" ID X 1-1/4" OD, EPDM BONDED SS	1
6	CAP SCREW, HEX HEAD, 5/16"-18 X 1" UNC-2A, NYLON PATCH, W/ CAPTIVE WASHER, T'OD, 18-8 SS	1

PROPRIETARY AND CONFIDENTIAL
THE INFORMATION CONTAINED IN THIS DRAWING IS THE SOLE PROPERTY OF QUICK MOUNT PV. ANY REPRODUCTION IN PART OR AS A WHOLE WITHOUT THE WRITTEN PERMISSION OF QUICK MOUNT PV IS PROHIBITED. COPYRIGHT © 2019 QUICK MOUNT PV

DO NOT SCALE DRAWING

Quick Mount PV

TITLE: QMLSH: QBASE LOW SLOPE MOUNT

UNLESS OTHERWISE SPECIFIED:	SIZE	DRAWN BY: RAD	REV
DIMENSIONS ARE IN INCHES TOLERANCES: FRACTIONAL ± 1/8 TWO PLACE DECIMAL ± .19 THREE PLACE DECIMAL ± .094	A	DATE: 8/9/2019	10
	SCALE: 1:3	WEIGHT: 1.02	SHEET 1 OF 1

5 4 3 2 1

Lag pull-out (withdrawal) capacities (lbs) in typical lumber:

	Lag Bolt Specifications		
	Specific Gravity	2/ea 5/16" shaft per 2.5" thread depth	5/16" shaft per 1" thread depth
Douglas Fir, Larch	.50	1330	266
Douglas Fir, South	.46	1175	235
Engelmann Spruce, Lodgepole Pine (MSR 1650 f & higher)	.46	1175	235
Hem, Fir	.43	1060	212
Hem, Fir (North)	.46	1175	235
Southern Pine	.55	1535	307
Spruce, Pine, Fir	.42	1025	205
Spruce, Pine, Fir (E of 2 million psi and higher grades of MSR and MEL)	.50	1330	266

Sources: American Wood Council, NDS 2005, Table 11.2 A, 11.3.2 A

Notes:

1) Thread must be embedded in a rafter or other structural roof member.
2) See IBC for required edge distances.

Quick Mount PV®
RESPECT THE ROOF

BI 7.2.3-5

Aug-2019, Rev 10

QBase Low Slope Mount Instructions

WARNING: Quick Mount PV products are NOT designed and should NOT be used to anchor fall protection equipment.

Installation Tools Required: Drill with 7/32" bit, Impact gun with 1/2" socket, 1 tube of sealant compatible with roofing materials, pencil, chalk line

CAUTION: Prior to installation, check that proper screw embedment will be achieved for the necessary site load and roofing configurations.

Locate the desired mount placement over a rafter (or custom wood blocking). Using the base as a template, mark the two penetration points with either a pen or light drilling. Use two opposing holes on the base plate, parallel to the structural member.

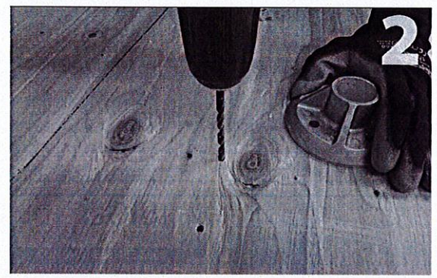

Drill both pilot holes with a 7/32-inch bit. Make sure to hold the drill square to the rafter. The lag bolts must be anchored into a structural member, so it is very important to hit the center of the rafter with your pilot holes. Fill the pilot holes with a sealant compatible with roofing materials.

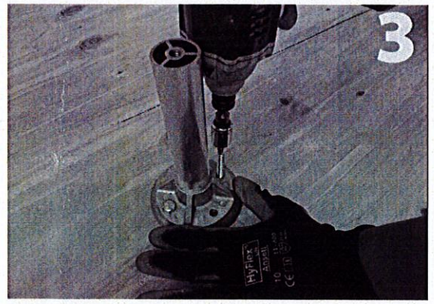

Prior to attaching the base to the roof, place the grade-8 hex bolt (item 1) in the bottom of the base (item 2) and screw the post (item 4) in. This is easier than adding the post after securing the base to the roof. Attach the base/post assembly to the roof with two lag bolts (item 3).

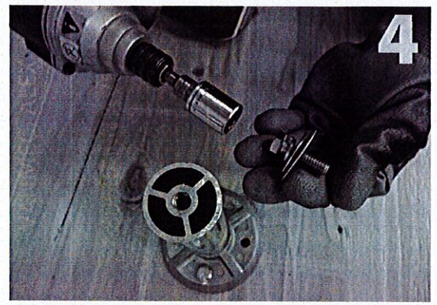

Attach the hardware (items 5-8) to the top of the post. (Be sure to seal off the post from weather exposure with the sealing washer (item 5), in the interim before racks are installed.) You are now ready to flash the mount, roof around it, and attach racking. Aluminum flashings for built-up roofs are available from Quick Mount PV in 4" and 8" cones (sold separately). For membrane roofs, be sure to use manufacturer-specified flashing and utilize the services of a certified roofer.

LA RESEARCH REPORTS (LARR): Approved for use in the City of Los Angeles per LARR #26194

Quick Mount PV®

925-478-8269 | www.quickmountpv.com | tech@quickmountpv.com
2700 Mitchell Dr. | Walnut Creek, CA 94598

BI 7.2.3-5

Aug-2019, Rev10

©2019 by Quick Mount PV. All rights reserved.

BUILDING DEPARTMENT SEAL STAMP

LORD & LAWRENCE CONSULTING ENGINEERS
CONTACT: (561) 660-5200
6801 LAKE WORTH ROAD SUITE 302
LAKE WORTH, FL 33467
FLORIDA REGISTRY# 33809

prosolar SYSTEMS
CONTACT: 888-462-5005
1100 W OAKLAND PARK BLVD,#8
WILTON MANORS, FL 33311
SOLAR CONTRACTOR LICENSE: CVC57028

VANMEC, ALEX

806 JANN AVE,
OPA-LOCKA, FL 33054
25.907862, -80.254127

SIGNATURE WITH SEAL

ATTACHMENT DATASHEET

PV-12

HYDROSTOP
PremiumCoat® Fabric
Product Data Sheet

PRODUCT DESCRIPTION

PremiumCoat® Fabric is a tough, non-woven, stitch-bonded, heat-set polyester designed for roofing and flashing applications of all types.

PACKAGING

PremiumCoat® Fabric is available in 300 ft long rolls, with the following widths: 4", 6", 8", 12", 16", 20", 24".

PremiumCoat® Fabric is available in 336 ft long rolls, with the following widths: 40".

BASIC USES

PremiumCoat® Fabric is designed for use in conjunction with either the PremiumCoat® or BarrierGuard® systems. It acts as a reinforcing material, increasing the long-term strength of either system. It also allows the stresses of normal building movement to be spread over a wider area.

PHYSICAL PROPERTIES

PREMIUMCOAT® FABRIC	
Weight	3.0 (± 10%) ounces/yd² 10.0 (± 10%) grams/m²
Tensile Strength	MD: 124 lbs (56 kg) avg value CD: 77 lbs (35 kg) (ASTM D5034)
Elongation @ Break	MD: 26% avg value CD: 64% (ASTM D5034)

Ball Burst	109 lbs (49 kg) avg value (ASTM D3787)
Trapezoid	MD: 17 lbs (7.7 kg) avg value CD: 20 lbs (9.1 kg) (ASTM D117)
Thickness	0.018 inches (0.457 mm) avg value (ASTM D1777)

For specific physical property information on PremiumCoat® Foundation Coat and Finish Coat components or information on PremiumCoat® System or BarrierGuard®, please refer to individual Product Data Sheets.

APPLICATION INSTRUCTIONS

PremiumCoat® System: Refer to GAF **PremiumCoat® System** specifications regarding surface preparation, cleaning, priming instructions, application information, coverage rates, and minimum membrane mil thickness required.

Apply one coat of **PremiumCoat® Foundation Coat ("Foundation Coat")** to the substrate at the rate of 50 to 80 ft²/gallon (1.2 to 2 m²/liter), with **PremiumCoat® Fabric ("Fabric")** (sizes vary) laid into the wet **Foundation Coat**, and a second coat of **Foundation Coat** immediately applied over the top at the rate of 50 to 80 ft²/gallon (1.2 to 2.0 m²/liter) to saturate the **Fabric. Fabric** should be laid out smooth side down. When rolled out, lettering on **Fabric** should be distinct and able to be read left to right.

Foundation Coat is applied at a total rate of 25 to 40 ft²/gallon (.6 to 1.0 m²/liter), depending on the texture and porosity of the substrate. **Foundation Coat** should only be applied using approved roof brushes. Rolling and/or spraying **Foundation Coat** is strictly prohibited.

To complete the **PremiumCoat® System**, apply specified number of coats of **PremiumCoat® Finish Coat ("Finish Coat")** by brush, roller, or airless sprayer.

BarrierGuard® System: Refer to GAF **BarrierGuard®** specifications regarding surface preparation, cleaning, priming instructions, application information, coverage rates, etc.

Mix **BarrierGuard®** slurry material in accordance with GAF specifications. A light misting of water on masonry surfaces may be necessary prior to applying **BarrierGuard®** slurry on hot and/or sunny days.

Apply first coat of **BarrierGuard®** slurry and embed **Fabric** into still-wet slurry coat, immediately followed by a saturation coat of slurry, and allow to dry. The **PremiumCoat® Fabric** should be installed vertically (like wallpaper).

Apply a final additional coat of **BarrierGuard®** slurry and allow to cure.

SAFETY & HANDLING

Keep **Fabric** in a clean, dry location. For specific information regarding safe handling of this material, please refer to the Safety Data Sheet (SDS).

See applicable warranties and guarantees for complete coverage and restrictions.

GAF
1 Campus Drive
Parsippany, NJ 07054
1-800-ROOF-411
gaf.com

GAF Liquid-Applied

January 2016, supercedes March 2015

For technical, system, and warranty information, visit gaf.com or call 1-800-766-3411.

FlexSeal™ Caulk Grade Sealant
Product Data Sheet

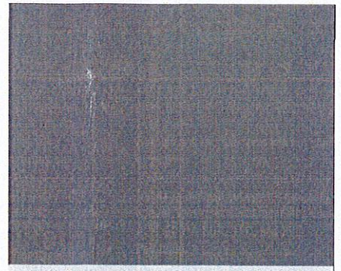

PRODUCT DESCRIPTION

FlexSeal™ Caulk Grade Sealant is a white solvent-based synthetic elastomeric sealant. FlexSeal is extremely flexible and durable, but with a higher viscosity formulation than Standard FlexSeal. Like all solvent-based products, the surface must be clean, completely free of moisture and residual contaminants before application. FlexSeal™ Caulk Grade Sealant is especially suited for use in any application where caulk is typically used.

WARRANTY

See applicable warranties and guarantees for complete coverage and restrictions.

PACKAGING & SHELF LIFE

10 oz. cartridge

Shelf life 12 months if unopened containers stored between 50°F and 80°F. Storage outside this temperature range may shorten shelf life.

BASIC USES

FlexSeal™ Caulk Grade Sealant is designed for use on metal, copper, concrete, wood, asphalt shingles, SBS, APP, EPDM, BUR, TPO and PVC substrates. Especially designed for use where elastomeric caulks are required; like term bar applications, or around clamping rings at penetrations. FlexSeal™ Caulk Grade Sealant may be used for cold weather applications provided that the material is stored properly and the substrate is dry prior to application.

Advantages

- Extremely flexible and durable
- Ideal for termination bar, railing, step flashings, or edge metal
- Durable and UV resistant; will not chalk, crack or peel
- Joint movement capability maximum ± 25%
- Bonds to multiple substrates including; metal, copper, concrete, wood, asphalt shingles, SBS, APP, EPDM, BUR, TPO, and PVC.
- Paintable

PHYSICAL PROPERTIES

FLEXSEAL™ CAULK GRADE SEALANT	
Application Rate	Approximately 1/4 -3/8 inch (6 - 10 mm) bead
Application Method	Caulk Gun
Application Temp (air, surface)	32°F - 120°F (0°C - 48.9°C)
Drying Time (75°F, 50% RH)	24 - 48 hrs; Skins in less than 1 hour; Full Cure - approx. 48 hours

Total Solids (by weight	77% ± 2%
Specific Gravity	1.24 ± 0.1
Weight per Gallon	10.3 ± 0.5 lbs.
Viscosity (75°F)	1,200,000 cps ± 10%
Tensile Strength	>250 psi (>1.72 N/sq mm)

APPLICATION INSTRUCTIONS

For application questions, please contact GAFMC Contractor Services at 1-800-766-3411.

Applicable Standards: FlexSeal™ Caulk Grade Sealant meets ASTM. D-412 and D-920; and is tested in accordance with D-2198 and D-1475.

Application Considerations: FlexSeal™ Caulk Grade Sealant is not a structural component and it is not intended to bridge large voids. Joint depth should not exceed 1/2" wide by 1/2" deep (13 mm x 13 mm).

If joint exceeds 1/2" (13 mm) deep, the sealant depth should be controlled by a closed cell backer rod. The number of joints and width of joints should be designed to accommodate a maximum of 25% movement. Note: Apply only as directed. Over-application may result in slumping, dripping, or unsightly appearance.

Note: Repair leaks promptly to avoid adverse effects, including mold growth.

LIMITATIONS & PRECAUTIONS

Store in well-ventilated area at 50°F to 90°F. This product is easiest to apply at temperatures above 32°F (0°C). Substrate temperatures must be below 120°F (48.9°C) when applying product.

SAFETY & HANDLING

For specific information regarding safe handling of this material please refer to OSHA guidelines and product Safety Data Sheet (SDS).

CLEAN UP

Clean-Up: Mineral Spirits, Toluene, Xylene

See applicable warranties and guarantees for complete coverage and restrictions.

GAF
1 Campus Drive
Parsippany, NJ 07054
1-800-ROOF-411
gaf.com

GAF Liquid-Applied

January 2016

For technical, system, and warranty information, visit gaf.com or call 1-800-766-3411.

BUILDING DEPARTMENT SEAL STAMP

LORD & LAWRENCE CONSULTING ENGINEERS
CONTACT: (561) 660-5200
6801 LAKE WORTH ROAD SUITE 302
LAKE WORTH, FL 33467
FLORIDA REGISTRY# 33809

prosolar SYSTEMS
CONTACT: 888-462-5005
1100 W OAKLAND PARK BLVD,#8
WILTON MANORS, FL 33311
SOLAR CONTRACTOR LICENSE: CVC57028

VANMEC, ALEX

806 JANN AVE,
OPA-LOCKA, FL 33054
25.907862, -80.254127

SIGNATURE WITH SEAL

SEALANT DATASHEET
PV-13

Tech Brief

IRONRIDGE

UFO® Family of Components

Simplified Grounding for Every Application

The UFO® family of components eliminates the need for separate grounding hardware by bonding solar modules directly to IronRidge® XR Rails®. All system types that feature the UFO® family—Flush Mount®, Tilt Mount® and Ground Mount®—are fully listed to the UL 2703 standard.

UFO® hardware forms secure electrical bonds with both the module and the rail, resulting in many parallel grounding paths throughout the system. This leads to safer and more reliable installations.

Only for installation and use with IronRidge products in accord with written instructions. See IronRidge.com/UFO

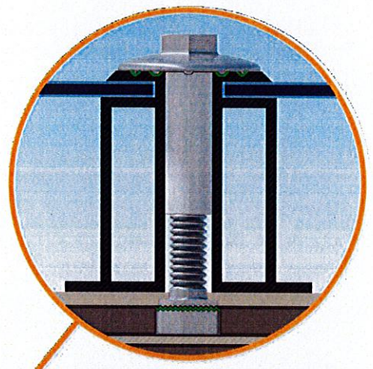

Universal Fastening Object (UFO®)
The UFO® securely bonds solar modules to XR Rails®. It comes assembled and lubricated, and can fit a wide range of module heights.

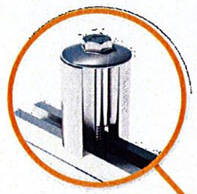

Stopper Sleeve
The Stopper Sleeve snaps onto the UFO®, converting it into a bonded end clamp.

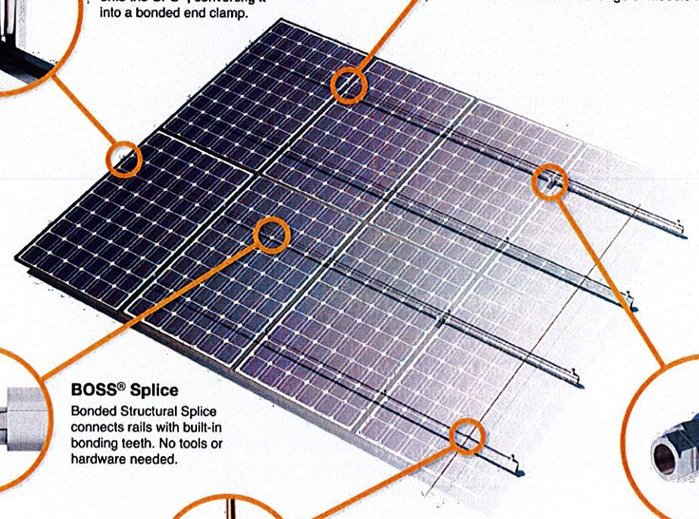

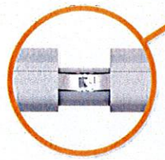

BOSS® Splice
Bonded Structural Splice connects rails with built-in bonding teeth. No tools or hardware needed.

Grounding Lug
A single Grounding Lug connects an entire row of PV modules to the grounding conductor.

Bonded Attachments
The bonding bolt attaches and bonds the L-foot® to the rail. It is installed with the same socket as the rest of the system.

Tech Brief

System Diagram

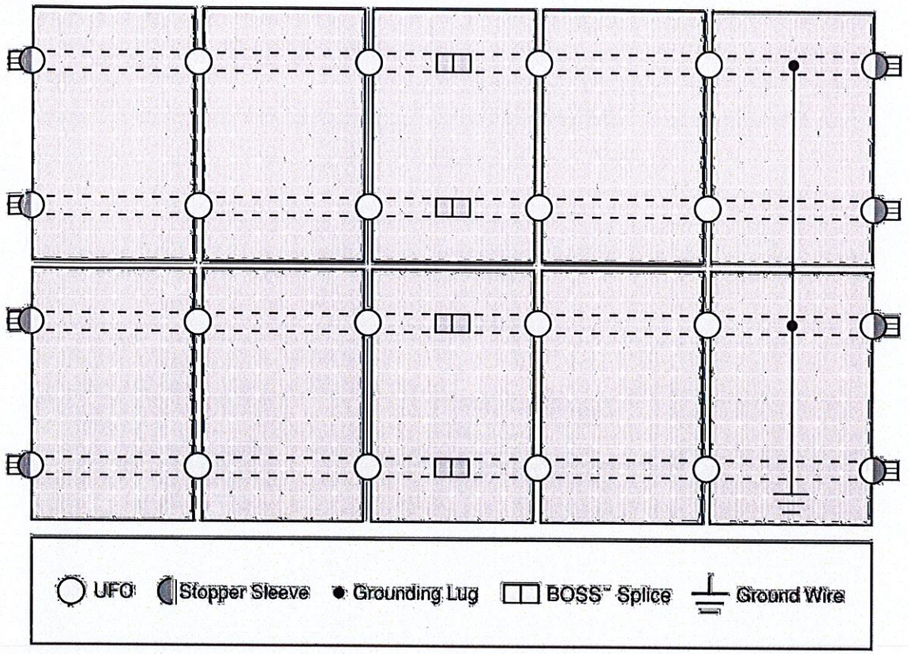

Approved Enphase microinverters can provide equipment grounding of IronRidge systems, eliminating the need for grounding lugs and field installed equipment ground conductors (EGC). A minimum of two microinverters mounted to the same rail and connected to the same Engage cable is required. Refer to installation manuals for additional details.

UL Certification

The IronRidge® Flush Mount®, Tilt Mount®, and Ground Mount Systems have been listed to UL 2703 by Intertek Group plc.

UL 2703 is the standard for evaluating solar mounting systems. It ensures these devices will maintain strong electrical and mechanical connections over an extended period of time in extreme outdoor environments.

Go to IronRidge.com/UFO

Cross-System Compatibility

Feature	Flush Mount	Tilt Mount	Ground Mount
XR Rails®	✔	✔	XR100 & XR1000
UFO®/Stopper	✔	✔	✔
BOSS® Splice	✔	✔	N/A
Grounding Lugs	1 per Row	1 per Row	1 per Array
Microinverters & Power Optimizers	Compatible with most MLPE manufacturers. Refer to system installation manual.		
Fire Rating	Class A	Class A	N/A
Modules	Tested or Evaluated with over 400 Framed Modules Refer to installation manuals for a detailed list.		

© 2022 IronRidge, Inc. All rights reserved. Visit www.ir-patents.com for patent information. Version 1.23

BUILDING DEPARTMENT SEAL STAMP

LORD & LAWRENCE
CONSULTING ENGINEERS
CONTACT: (561) 660-5200
6801 LAKE WORTH ROAD SUITE 302
LAKE WORTH, FL 33467
FLORIDA REGISTRY# 33809

prosolar SYSTEMS
CONTACT: 888-462-5005
1100 W OAKLAND PARK BLVD,#8
WILTON MANORS, FL 33311
SOLAR CONTRACTOR LICENSE: CVC57028

VANMEC, ALEX

806 JANN AVE,
OPA-LOCKA, FL 33054
25.907862, -80.254127

SIGNATURE WITH SEAL

GROUNDING & BONDING DATASHEET

PV-14

nVent | ILSCO

nVent ILSCO Solutions for 2020 NEC 230.46

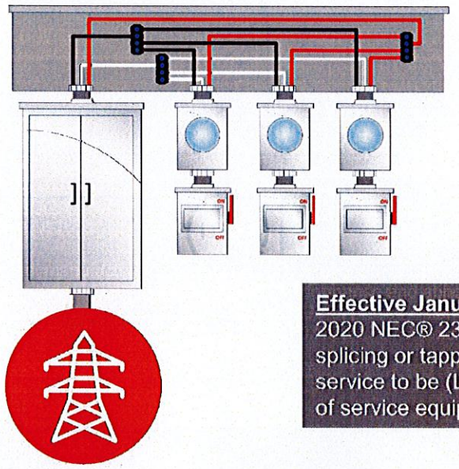

NFPA 70 National Electrical Code 2020

Effective January 1, 2023

2020 NEC® 230.46 requires wire connectors used for splicing or tapping conductors on the line side of the service to be (Listed) as "suitable for use on the line side of service equipment" or equivalent.

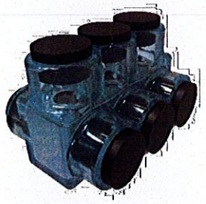

AVAILABLE NOW

Clear Insulated Nimbus

AVAILABLE NOW

Black Insulated Nimbus

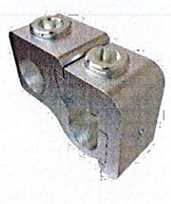

AVAILABLE NOW

GTA Series

AVAILABLE NOW

Insulation Piercing - IPC

Suitable for Use on the Line-Side of the Service Disconnect

nVent

4701 Creek Road, Suite 110
Cincinnati, Ohio 45242
nVent.com/ILSCO

nVent ILSCO Insulation Piercing Connector: First in the Industry to Meet New NEC Requirement for Service Entrance Connections

nVent is excited to announce that **nVent ILSCO Insulation Piercing Copper Connector, IPC-250-4/0** is now UL Listed as suitable for use on the line side of service equipment. It **meets the 2020 NEC 230.46 requirement** that went into effect on January 1, 2023, requiring pressure connectors installed on service entrance splices and taps be listed and marked "suitable for use on the line side of service equipment." nVent ILSCO connectors were tested to UL 486A-486B Annex H which is the test standard required to meet 2020 NEC 230.46.

nVent ILSCO is the first manufacturer to meet the NEC 230.46 requirement. This is the second announcement by nVent ILSCO regarding its product performance and ability to meet this important standard. nVent ILSCO now offers its customers **293 SKUs** of pressure connectors, parallel tap connectors and insulation piercing connector for the 2020 NEC 230.46 requirement:

NIMBUS DOUBLE SIDE ENTRY		NIMBUS SINGLE SIDE ENTRY		CLEARTAP DOUBLE SIDE		CLEARTAP SINGLE SIDE ENTRY	
PBTD-3-1/0-SR	PBTD-3-600-SR	PBTS-3-1/0-SR	PBTS-3-600-SR	ECTD-3-1/0-SR	ECTD-3-600-SR	ECTS-3-1/0-SR	ECTS-3-600-SR
PBTD-4-1/0-SR	PBTD-4-600-SR	PBTS-4-1/0-SR	PBTS-4-600-SR	ECTD-4-1/0-SR	ECTD-4-600-SR	ECTS-4-1/0-SR	ECTS-4-600-SR
PBTD-5-1/0-SR	PBTD-5-600-SR	PBTS-5-1/0-SR	PBTS-5-600-SR	ECTD-5-1/0-SR	ECTD-5-600-SR	ECTS-5-1/0-SR	ECTS-5-600-SR
PBTD-6-1/0-SR	PBTD-6-600-SR	PBTS-6-1/0-SR	PBTS-6-600-SR	ECTD-6-1/0-SR	ECTD-6-600-SR	ECTS-6-1/0-SR	ECTS-6-600-SR
PBTD-7-1/0-SR	PBTD-7-600-SR	PBTS-7-1/0-SR	PBTS-7-600-SR	ECTD-7-1/0-SR	ECTD-7-600-SR	ECTS-7-1/0-SR	ECTS-7-600-SR
PBTD-8-1/0-SR	PBTD-8-600-SR	PBTS-8-1/0-SR	PBTS-8-600-SR	ECTD-8-1/0-SR	ECTD-8-600-SR	ECTS-8-1/0-SR	ECTS-8-600-SR
PBTD-9-1/0-SR	PBTD-9-600-SR	PBTS-9-1/0-SR	PBTS-9-600-SR	ECTD-9-1/0-SR	ECTD-9-600-SR	ECTS-9-1/0-SR	ECTS-9-600-SR
PBTD-10-1/0-SR	PBTD-10-600-SR	PBTS-10-1/0-SR	PBTS-10-600-SR	ECTD-10-1/0-SR	ECTD-10-600-SR	ECTS-10-1/0-SR	ECTS-10-600-SR
PBTD-11-1/0-SR	PBTD-11-600-SR	PBTS-11-1/0-SR	PBTS-11-600-SR	ECTD-11-1/0-SR	ECTD-11-600-SR	ECTS-11-1/0-SR	ECTS-11-600-SR
PBTD-12-1/0-SR	PBTD-12-600-SR	PBTS-12-1/0-SR	PBTS-12-600-SR	ECTD-12-1/0-SR	ECTD-12-600-SR	ECTS-12-1/0-SR	ECTS-12-600-SR
PBTD-13-1/0-SR	PBTD-13-600-SR	PBTS-13-1/0-SR	PBTS-13-600-SR	ECTD-13-1/0-SR	ECTD-13-600-SR	ECTS-13-1/0-SR	ECTS-13-600-SR
PBTD-14-1/0-SR	PBTD-14-600-SR	PBTS-14-1/0-SR	PBTS-14-600-SR	ECTD-14-1/0-SR	ECTD-14-600-SR	ECTS-14-1/0-SR	ECTS-14-600-SR
PBTD-3-3/0-SR	PBTD-3-750-SR	PBTS-3-3/0-SR	PBTS-3-750-SR	ECTD-3-3/0-SR	ECTD-3-750-SR	ECTS-3-3/0-SR	ECTS-3-750-SR
PBTD-4-3/0-SR	PBTD-4-750-SR	PBTS-4-3/0-SR	PBTS-4-750-SR	ECTD-4-3/0-SR	ECTD-4-750-SR	ECTS-4-3/0-SR	ECTS-4-750-SR
PBTD-5-3/0-SR	PBTD-5-750-SR	PBTS-5-3/0-SR	PBTS-5-750-SR	ECTD-5-3/0-SR	ECTD-5-750-SR	ECTS-5-3/0-SR	ECTS-5-750-SR
PBTD-6-3/0-SR	PBTD-6-750-SR	PBTS-6-3/0-SR	PBTS-6-750-SR	ECTD-6-3/0-SR	ECTD-6-750-SR	ECTS-6-3/0-SR	ECTS-6-750-SR
PBTD-7-3/0-SR	PBTD-7-750-SR	PBTS-7-3/0-SR	PBTS-7-750-SR	ECTD-7-3/0-SR	ECTD-7-750-SR	ECTS-7-3/0-SR	ECTS-7-750-SR
PBTD-8-3/0-SR	PBTD-8-750-SR	PBTS-8-3/0-SR	PBTS-8-750-SR	ECTD-8-3/0-SR	ECTD-8-750-SR	ECTS-8-3/0-SR	ECTS-8-750-SR
PBTD-9-3/0-SR	PBTD-9-750-SR	PBTS-9-3/0-SR	PBTS-9-750-SR	ECTD-9-3/0-SR	ECTD-9-750-SR	ECTS-9-3/0-SR	ECTS-9-750-SR
PBTD-10-3/0-SR	PBTD-10-750-SR	PBTS-10-3/0-SR	PBTS-10-750-SR	ECTD-10-3/0-SR	ECTD-10-750-SR	ECTS-10-3/0-SR	ECTS-10-750-SR
PBTD-11-3/0-SR	PBTD-11-750-SR	PBTS-11-3/0-SR	PBTS-11-750-SR	ECTD-11-3/0-SR	ECTD-11-750-SR	ECTS-11-3/0-SR	ECTS-11-750-SR
PBTD-12-3/0-SR	PBTD-12-750-SR	PBTS-12-3/0-SR	PBTS-12-750-SR	ECTD-12-3/0-SR	ECTD-12-750-SR	ECTS-12-3/0-SR	ECTS-12-750-SR
PBTD-13-3/0-SR	PBTD-13-750-SR	PBTS-13-3/0-SR	PBTS-13-750-SR	ECTD-13-3/0-SR	ECTD-13-750-SR	ECTS-13-3/0-SR	ECTS-13-750-SR
PBTD-14-3/0-SR	PBTD-14-750-SR	PBTS-14-3/0-SR	PBTS-14-750-SR	ECTD-14-3/0-SR	ECTD-14-750-SR	ECTS-14-3/0-SR	ECTS-14-750-SR
PBTD-3-250-SR	PBTD-3-350-SR	PBTS-3-250-SR	PBTS-3-350-SR	ECTD-3-250-SR	ECTD-3-350-SR	ECTS-3-250-SR	ECTS-3-350-SR
PBTD-4-250-SR	PBTD-4-350-SR	PBTS-4-250-SR	PBTS-4-350-SR	ECTD-4-250-SR	ECTD-4-350-SR	ECTS-4-250-SR	ECTS-4-350-SR
PBTD-5-250-SR	PBTD-5-350-SR	PBTS-5-250-SR	PBTS-5-350-SR	ECTD-5-250-SR	ECTD-5-350-SR	ECTS-5-250-SR	ECTS-5-350-SR
PBTD-6-250-SR	PBTD-6-350-SR	PBTS-6-250-SR	PBTS-6-350-SR	ECTD-6-250-SR	ECTD-6-350-SR	ECTS-6-250-SR	ECTS-6-350-SR
PBTD-7-250-SR	PBTD-7-350-SR	PBTS-7-250-SR	PBTS-7-350-SR	ECTD-7-250-SR	ECTD-7-350-SR	ECTS-7-250-SR	ECTS-7-350-SR
PBTD-8-250-SR	PBTD-8-350-SR	PBTS-8-250-SR	PBTS-8-350-SR	ECTD-8-250-SR	ECTD-8-350-SR	ECTS-8-250-SR	ECTS-8-350-SR
PBTD-9-250-SR	PBTD-9-350-SR	PBTS-9-250-SR	PBTS-9-350-SR	ECTD-9-250-SR	ECTD-9-350-SR	ECTS-9-250-SR	ECTS-9-350-SR
PBTD-10-250-SR	PBTD-10-350-SR	PBTS-10-250-SR	PBTS-10-350-SR	ECTD-10-250-SR	ECTD-10-350-SR	ECTS-10-250-SR	ECTS-10-350-SR
PBTD-11-250-SR	PBTD-11-350-SR	PBTS-11-250-SR	PBTS-11-350-SR	ECTD-11-250-SR	ECTD-11-350-SR	ECTS-11-250-SR	ECTS-11-350-SR
PBTD-12-250-SR	PBTD-12-350-SR	PBTS-12-250-SR	PBTS-12-350-SR	ECTD-12-250-SR	ECTD-12-350-SR	ECTS-12-250-SR	ECTS-12-350-SR
PBTD-13-250-SR	PBTD-13-350-SR	PBTS-13-250-SR	PBTS-13-350-SR	ECTD-13-250-SR	ECTD-13-350-SR	ECTS-13-250-SR	ECTS-13-350-SR
PBTD-14-250-SR	PBTD-14-350-SR	PBTS-14-250-SR	PBTS-14-350-SR	ECTD-14-250-SR	ECTD-14-350-SR	ECTS-14-250-SR	ECTS-14-350-SR
RUN TAP CONNECTORS	GTA-250-250 | GTA-250-250-W/C | GTA-250-0 | GTA-250-0-W/C						
INSULATION PIERCING	IPC-250-4/0						

Please contact nVent ILSCO for your next power connections project's need. To learn more, visit www.nVent.com/ILSCO.

BUILDING DEPARTMENT SEAL STAMP

LORD & LAWRENCE CONSULTING ENGINEERS
CONTACT: (561) 660-5200
6801 LAKE WORTH ROAD SUITE 302
LAKE WORTH, FL 33467
FLORIDA REGISTRY# 33809

prosolar SYSTEMS
CONTACT: 954-815-6015
110 W. ATLANTIC AVE, #8
DELRAY BEACH, FL 33444
SOLAR CONTRACTOR LICENSE: CVC57028

VANMEC, ALEX

806 JANN AVE,
OPA-LOCKA, FL 33054
25.907862, -80.254127

SIGNATURE WITH SEAL

INSULATION PIERCING DATASHEET

PV-15

CITY OF Opa-locka
BUILDING DEPARTMENT
780 Fisherman St
Opa-locka, FL 33054
Office: 305-953-2868
www.opalockafl.gov

CITY OF OPA-LOCKA
Community Development & Planning Dept.
Date Rec'd 6/26/24
Signature

Date: 6/26/2024 Clerk: MS

☐ Master Permit 24060078

☐ Sub-Permit

JOB ADDRESS 806 JANN AVE

PERMIT APPLICATION

1. OWNER INFORMATION
Owner Alexander VanMecl
Address 806 JANN AVE
City OPA-LOCKA ST FL Zip 33054
Driver License No. /I.D. V524-010-89-460-0
Phone No. (323) 547-3631

2. CONTRACTOR INFORMATION
Company Name Prosolar Group
Qualifier Name Peter Rosen
Address 1100 W Oakland Park Blvd #8
City Wilton Manors ST FL Zip 33311
Lic. No. CVC57028 Phone No. 954-390-2448

3. PERMIT TYPE (Choose only One)
☒ Building
☐ Electrical
☐ Mechanical
☐ Plumbing/Gas
☐ Sign
☐ Roofing

4. CHANGE TO AN EXISTING PERMIT (Choose only One)
☐ Change Contractor
☐ Extension
☐ Renewal
☐ Shop Drawing
☐ Lost Plans

5. TYPE OF IMPROVEMENT (Choose only One)
☐ New Construction ☐ Re-roof ☐ Pool
☐ Addition Attached ☐ Driveway ☐ Shed
☐ Alteration Interior ☐ Fence ☐ Other:
☐ Alteration Exterior ☐ Window
☐ Repair/Replace ☐ Door
☐ Demolition/Partial ☐ Shutters

6. ARCHITECT/ ENGINEER INFO
Name Kimandy Lawrence
Address 6801 Lake Worth Rd. Ste 302
City Lake Worth ST FL Zip Code 33467
Lic. No. PE 83317 Discipline
Phone No. 561-660-5200

7. CONTACT
Name Annette Martinez
E-mail Orio Martinez 00@gmail
Phone No. 286 674 0509

8. LEGAL/USE/WORK VALUE
Folio No. 08-2121-005-0130 No. of Units
Lot Block Subdivision LOT 2 BLK 62 OPA LOCKA NO 2 PB 28-72
Current Use of Property
Description of Work Photovoltaic Solar System on rooftop
Square FT. Linear FT.
Work Value 30,710 Building Value
Flood Zone Base Flood Elevation

Application is hereby made to obtain a permit to do the work and/or installations as indicated. I certify that no work or installation has commenced prior to the issuance of a permit and that all work will be performed to meet the standards of all laws regulating construction in this jurisdiction. I understand that a separate permit must be secured for Electrical, Plumbing, Signs, Wells, Pools, Furnaces, Boilers, Heaters, Tanks, Air Conditioning, Driveways, Portable Storage Units, etc.
Owner's Affidavit: I certify that all the foregoing information is accurate, and that work will be done in compliance with all applicable laws regulating construction and zoning.

NOTICE REGARDING BUILDING PERMIT APPLICATIONS

The Completion and submission of a Building Permit Application is a requirement of securing a City Building Permit. The City will rely upon the information contained in the Application in determining whether a City Building Permit should be issued. The submission of inaccurate, misleading, or misrepresented information in this application shall subject the Building Permit to denial, suspension or revocation, and the individual applying for the permit, to all appropriate fines, penalties and other punishments authorized by law. KINDLY GOVERN YOURSELF ACCORDINGLY.
WARNING TO OWNER: YOUR FAILURE TO RECORD A NOTICE OF COMMENCMENT MAY RESULT IN YOU PAYING TWICE FOR IMPROVMENTS TO YOUR PROPERTY. IF YOU INTEND TO OBTAIN FINANCING, CONSULT WITH YOUR LENDER OR AN ATTORNEY BEFORE RECORDING YOUR NOTICE OF COMMENCEMENT.

OWNER INFORMATION

Alexander VanMecl
PRINT NAME OWNERS SIGNATURE
SWORN TO AND SUBSCRIBED BEFORE ME BY: (PRINT OWNER NAME)
Alexander VanMecl
BY MEANS OF PHYSICAL PRESENCE NOTARIZATION AND PRODUCED
V524-010-89-460-0 OR IS PERSONALLY KNOWN
As identified on this 24 day of Jun 2024
Notary's Signatures
Printed Name of Notary Miguel Salazar.

MIGUEL SALAZAR
Notary Public - State of Florida
Commission # HH 267853
My Comm. Expires May 24, 2026
Bonded through National Notary Assn.

Peter Rosen
PRINT NAME OWNERS SIGNATURE
SWORN TO AND SUBSCRIBED BEFORE ME BY: (PRINT QUALIFIER NAME)
~~Carlos Gonzalez~~ Peter Rosen
BY MEANS OF PHYSICAL PRESENCE NOTARIZATION AND PRODUCED
OR IS PERSONALLY KNOWN
As identified on this 24 day of Jun 20
Notary's Signatures
Printed Name of Notary Miguel Salazar.

MIGUEL SALAZAR
Notary Public - State of Florida
Commission # HH 267853
My Comm. Expires May 24, 2026
Bonded through National Notary Assn.

DO NOT WRITE BELOW – FOR OFFICE USE ONLY

✓	TRADE	APPROVED/DATE	DISAPPROVED/DATE	APPLICATION INCLUDES	FEES $	.00
	Zoning			Zoning		
	Structural			Structural		
	Building			Base Fee		
	Electrical			Scanning		
	Mechanical			Technology		
	Plumbing			Rework		
	Roofing			Violation		
	Flood			DBPR/DCA		
	Publics Works			Code Compliance		
				(-) Upfront Fee		
				Balance Due		

Alex VanMecl
806 Jann Ave, Opa-locka, FL 33054, USA
+1 (323) 547-3631
alexvanmecl@gmail.com

Solar details

System size
15.355 kW DC

Panels
BSM415M10-54HPH
Inverters
Tesla Solar Inverter 7.6 kW [240V]

CEC-AC rating
14.747 kW AC

Estimated First Year Production
20,368 kWh

Consumption Offset
104%

Array details

Panel: BSM415M10-54HPH

Quantity: 4	**Watts:** 415	**Azimuth:** 150° (SE)	**Tilt:** 18°	**Mounting:** flat

Panel: BSM415M10-54HPH

Quantity: 4	**Watts:** 415	**Azimuth:** 151° (SE)	**Tilt:** 5°	**Mounting:** flat

Panel: BSM415M10-54HPH

Quantity: 20	**Watts:** 415	**Azimuth:** 153° (SE)	**Tilt:** 5°	**Mounting:** flat

Panel: BSM415M10-54HPH

Quantity: 9	**Watts:** 415	**Azimuth:** 151° (SE)	**Tilt:** 5°	**Mounting:** flat

Alex VanMecl
806 Jann Ave, Opa-locka, FL 33054, USA
+1 (323) 547-3631
alexvanmecl@gmail.com

Materials

Material	Description	Data sheet	Quantity
Panels	BSM415M10-54HPH (415 Watts)	-	37
Inverters	Tesla Solar Inverter 7.6 kW [240V]	Download	2

Alex VanMecl
806 Jann Ave, Opa-locka, FL 33054, USA
+1 (323) 547-3631
alexvanmecl@gmail.com

Pricing

	Price	Discounts & rebates	Total price
Base Price for Solar Based on a 15.355 kW installation	$30,710.00		
Gross Cost	$30,710.00		$30,710.00
%		0	
Cost after rebates & incentives*	$30,710.00		$30,710.00

Note:

* Not everyone is eligible for credits, incentives, or rebates or can fully use them. Please consult your tax professional or legal professional for further information.

* Incentives are subject to change. The actual amount can be higher or lower than what is quoted, and may not stay at a fixed rate over time. It can also change based on the tax bracket you are in.

Alex VanMecl
806 Jann Ave, Opa-locka, FL 33054, USA
+1 (323) 547-3631
alexvanmecl@gmail.com

Signature

I hereby agree to move forward with the solar project as described above and agree to the Terms and Conditions below of the contract provided by the installer ProSolar Group LLC joined to this proposal.

06-10-2024

Alex VanMecl

Date of signature (MM-DD-YYYY)

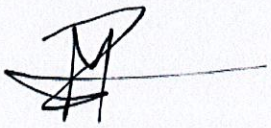

06-11-2024

Date of signature (MM-DD-YYYY)

NOTICE OF COMMENCEMENT

A RECORDED COPY MUST BE POSTED ON THE JOB SITE AT TIME OF FIRST INSPECTION

CFN: 20240478197 BOOK 34285 PAGE 462
DATE:06/24/2024 03:51:43 PM
JUAN FERNANDEZ-BARQUIN
CLERK OF THE COURT & COMPTROLLER
MIAMI-DADE COUNTY, FL

PERMIT NO._____ TAX FOLIO NO. 08-2121-005-0130

STATE OF FLORIDA:
COUNTY OF MIAMI-DADE:

THE UNDERSIGNED hereby gives notice that improvements will be made to certain real property, and in accordance with Chapter 713, Florida Statutes, the following information is provided in this Notice of Commencement.

Space above reserved for use of recording office

1. Legal description of property and street/address: OPA LOCKA NO 2 PB 28-72 LOT 2 BLK 62
806 JANN AVE
2. Description of improvement: Photovoltaic Solar System on rooftop
3. Owner(s) name and address: Alexander VanMecl 806 JANN AVE OPA-LOCKA, FL 33054
Interest in property: Owner
Name and address of fee simple titleholder: _____
4. Contractor's name, address and phone number: _____
5. Surety: (Payment bond required by owner from contractor, if any)
Name, address and phone number: _____
Amount of bond $_____
6. Lender's name and address: _____
7. Persons within the State of Florida designated by Owner upon whom notices or other documents may be served as provided by Section 713.13(1)(a)7., Florida Statutes,
Name, address and phone number: _____
8. In addition to himself, Owners designates the following person(s) to receive a copy of the Lienor's Notice as provided in Section 713.13(1)(b), Florida Statutes.
Name, address and phone number: _____
9. Expiration date of this Notice of Commencement: _____
(the expiration date is 1 year from the date of recording unless a different date is specified)

WARNING TO OWNER: ANY PAYMENTS MADE BY THE OWNER AFTER THE EXPIRATION OF THE NOTICE OF COMMENCEMENT ARE CONSIDERED IMPROPER PAYMENTS UNDER CHAPTER 713, PART I, SECTION 713.13. FLORIDA STATUTES, AND CAN RESULT IN YOUR PAYING TWICE FOR IMPROVEMENTS TO YOUR PROPERTY. A NOTICE OF COMMENCEMENT MUST BE RECORDED AND POSTED ON THE JOB SITE BEFORE THE FIRST INSPECTION. IF YOU INTEND TO OBTAIN FINANCING, CONSULT WITH YOUR LENDER OR AN ATTORNEY BEFORE COMMENCING WORK OR RECORDING YOUR NOTICE OF COMMENCEMENT.

Signature(s) of Owner(s) or Owner(s)' Authorized Officer/Director/Partner/Manager

Prepared By _____
Print Name Alexander VanMecl
Title/Office _____

Prepared By _____
Print Name _____
Title/Office _____

STATE OF FLORIDA
COUNTY OF MIAMI-DADE
The foregoing instrument was acknowledged before me this 24 day of June 2024
By Alexander VanMecl
☐ Individually, or ☐ as _____ for _____
☐ Personally known, or ☑ produced the following type of identification: V524-010-89-460-0
Signature of Notary Public: _____
Print Name: Miguel Salazar
(SEAL)

MIGUEL SALAZAR
Notary Public - State of Florida
Commission # HH 267853
My Comm. Expires May 24, 2026
Bonded through National Notary Assn.

VERIFICATION PURSUANT TO SECTION 92.525, FLORIDA STATUTES
Under penalties of perjury, I declare that I have read the foregoing and that the facts stated in it are true, to the best of my knowledge and belief.

Signature(s) of Owner(s) or Owner(s)'s Authorized Officer/Director/Partner/Manager who signed above:

By _____ By _____

123_01-52 PAGES 6/12

City of Opa-locka Building Department

780 Fisherman Street 1st Floor Suite 130-B
Opa-locka, Florida 33054
(305) 953-2868 Option 4

NOTICE TO CITY OF OPA-LOCKA BUILDING DEPARTMENT OF EMPLOYMENT AS SPECIAL INSPECTOR UNDER THE FLORIDA BUILDING CODE

I, (We) have been retained by (permit holder) VanMec Residence to perform Inspection services under the Florida Building Code at the (address) 806 Jann Avenue project on the listed permit number _____ as of 06/21/2024 (date). I am a registered architect or professional engineer licensed in the State of Florida with license number _____.

- ☐ SPECIAL INSPECTOR FOR PILING, CMDC sect. 8-22
- ☐ SPECIAL INSPECTOR TRUSSES>35' LONG OR 6' HIGH, CMDC sect. 8-22
- ☐ SPECIAL INSPECTOR FOR REINFORCED MASONRY, FBC 2122.24 & CMDC sect 8.22
- ☐ SPECIAL INSPECTOR FOR STEEL CONNECTIONS, CMDC sect 8.22
- ☐ SPECIAL INSPECTOR FOR SOIL COMPACTION under Concrete Slabs, CMDC sect 8.22
- ☐ SPECIAL INSPECTOR FOR PRECAST UNITS & ATTACHMENTS, CMDC sect 8.22
  (For tilt-up walls systems, inspect reinforcement as well)
- ☐ SPECIAL INSPECTOR FOR CURTAIN WALL, CMDC sect 8.22
- ☐ SPECIAL INSPECTOR FOR STRUCTURAL GLAZING, CMDC sect 8.22
- ☐ SPECIAL INSPECTOR FOR LIGHTWEIGHT INSULATING CONCRETE, CMDC sect 8.22
- ☐ SPECIAL INSPECTOR FOR COMPOSITE FLOOR SYSTEM, CMDC sect 8.22
- ☒ SPECIAL INSPECTOR FOR Solar PV Attachments

Note: Only the marked boxes apply.

The following individual (s) employed by this firm, or me are authorized representatives to perform inspection*

1. Kimandy Lawrence
2. Mindy O'Neal
3. Roger Messenger
4. _____

**Special inspectors utilizing authorized representatives shall insure the authorized representative is qualified by education or licensure to perform the duties assigned by the Special Inspector. The qualifications shall include: licensure as a professional engineer or architect; graduation from an engineering education program in civil or structural engineering; graduation from an architectural education program; successful completion of the NCEES Fundamentals Examination; or registration as building inspector or general contractor.*

I, (we) will notify City of Opa-locka Building Department of any changes regarding authorized personnel performing inspection services.

I, (we) understand that a Special Inspector inspection log for each building must be displayed in a convenient location on the site for reference by the City of Opa-locka Building Department Inspector. All mandatory inspections, as required by the Florida Building Code, must be performed by the City. The City building inspections must be called for on all mandatory inspections. Inspections performed by the Special Inspector hired by the Owner are in addition to the mandatory inspections performed by the Department. Further, upon completion of the work under each Building Permit I will submit to the Building Inspector at the time of final inspection the completed inspection log form and a sealed statement indicating that, to the best of my knowledge, belief and professional judgment those portions of the project outlined above meet the intent of the Florida Building Code and are in substantial accordance with the approved plans.

Engineer/Architect

Print Name Kimandy Lawrence

Address 6801 Lake Worth Rd #302, Lake Worth, FL 33467

Phone # 561-660-5200

Signed and Sealed 06/21/2024

Date

KIMANDY LAWRENCE LICENSE No. 83317 STATE OF FLORIDA PROFESSIONAL ENGINEER

6/21/24

City of Opa-locka Building Department

780 Fisherman Street 1st Floor Suite 130-B
Opa-locka, Florida 33054
(305) 953-2868 Option 4

NOTICE TO CITY OF OPA-LOCKA BUILDING DEPARTMENT OF EMPLOYMENT AS SPECIAL INSPECTOR UNDER THE FLORIDA BUILDING CODE

I, (We) have been retained by (permit holder) VanMec Residence to perform Inspection services under the Florida Building Code at the (address) 806 Jann Avenue project on the listed permit number _____ as of 06/21/2024 (date). I am a registered architect or professional engineer licensed in the State of Florida with license number _____.

- ☐ SPECIAL INSPECTOR FOR PILING, CMDC sect. 8-22
- ☐ SPECIAL INSPECTOR TRUSSES>35' LONG OR 6' HIGH, CMDC sect. 8-22
- ☐ SPECIAL INSPECTOR FOR REINFORCED MASONRY, FBC 2122.24 & CMDC sect 8.22
- ☐ SPECIAL INSPECTOR FOR STEEL CONNECTIONS, CMDC sect 8.22
- ☐ SPECIAL INSPECTOR FOR SOIL COMPACTION under Concrete Slabs, CMDC sect 8.22
- ☐ SPECIAL INSPECTOR FOR PRECAST UNITS & ATTACHMENTS, CMDC sect 8.22
  (For tilt-up walls systems, inspect reinforcement as well)
- ☐ SPECIAL INSPECTOR FOR CURTAIN WALL, CMDC sect 8.22
- ☐ SPECIAL INSPECTOR FOR STRUCTURAL GLAZING, CMDC sect 8.22
- ☐ SPECIAL INSPECTOR FOR LIGHTWEIGHT INSULATING CONCRETE, CMDC sect 8.22
- ☐ SPECIAL INSPECTOR FOR COMPOSITE FLOOR SYSTEM, CMDC sect 8.22
- ☒ SPECIAL INSPECTOR FOR Solar PV Attachments

Note: Only the marked boxes apply.

The following individual (s) employed by this firm, or me are authorized representatives to perform inspection*

1. Kimandy Lawrence
2. Mindy O'Neal
3. Roger Messenger
4. _____

**Special inspectors utilizing authorized representatives shall insure the authorized representative is qualified by education or licensure to perform the duties assigned by the Special Inspector. The qualifications shall include: licensure as a professional engineer or architect; graduation from an engineering education program in civil or structural engineering; graduation from an architectural education program; successful completion of the NCEES Fundamentals Examination; or registration as building inspector or general contractor.*

I, (we) will notify City of Opa-locka Building Department of any changes regarding authorized personnel performing inspection services.

I, (we) understand that a Special Inspector inspection log for each building must be displayed in a convenient location on the site for reference by the City of Opa-locka Building Department Inspector. All mandatory inspections, as required by the Florida Building Code, must be performed by the City. The City building inspections must be called for on all mandatory inspections. Inspections performed by the Special Inspector hired by the Owner are in addition to the mandatory inspections performed by the Department. Further, upon completion of the work under each Building Permit I will submit to the Building Inspector at the time of final inspection the completed inspection log form and a sealed statement indicating that, to the best of my knowledge, belief and professional judgment those portions of the project outlined above meet the intent of the Florida Building Code and are in substantial accordance with the approved plans.

Engineer/Architect

Print Name Kimandy Lawrence

Address 6801 Lake Worth Rd #302, Lake Worth, FL 33467

Phone # 561-660-5200

KIMANDY LAWRENCE LICENSE No. 83317 STATE OF FLORIDA PROFESSIONAL ENGINEER

Signed and Sealed 06/21/2024

Date

6/21/24

Product Approval
USER: Public User

OFFICE OF THE SECRETARY

FL #	FL41858-R1
Application Type	Revision
Code Version	2023
Application Status	Approved
Comments	
Archived	☐
Product Manufacturer	IronRidge Inc.
Address/Phone/Email	28357 Industrial Blvd. Hayward, CA 94545 (510) 225-0973 yschwarz@ironridge.com
Authorized Signature	Yann Schwarz yschwarz@ironridge.com
Technical Representative Address/Phone/Email	
Quality Assurance Representative Address/Phone/Email	
Category	Roofing
Subcategory	Products Introduced as a Result of New Technology
Compliance Method	Evaluation Report from a Florida Registered Architect or a Licensed Florida Professional Engineer ☐ Evaluation Report - Hardcopy Received
Florida Engineer or Architect Name who developed the Evaluation Report	Scott Wolters
Florida License	PE-62354
Quality Assurance Entity	Intertek Testing Services NA, Inc. - QA Entity
Quality Assurance Contract Expiration Date	12/31/2026
Validated By	Lucas A. Turner, P.E., MBA ☑ Validation Checklist - Hardcopy Received
Certificate of Independence	FL41858_R1_COI_IronCOI.pdf

Referenced Standard and Year (of Standard)

Standard	Year
ASTM D7147	2018
TAS 100(A)	2023

Equivalence of Product Standards Certified By

Sections from the Code

2406007B MASTER
2406007B 6/26/24

OFFICE COPY
BUILDING DEPARTMENT
City of Opa-locka, FL
Zoning
Building
Plumbing
Electrical
Mechanical
Public Works

Product Approval Method	Method 1 Option D
Date Submitted	10/19/2023
Date Validated	10/31/2023
Date Pending FBC Approval	11/02/2023
Date Approved	12/13/2023

Summary of Products

FL #	Model, Number or Name	Description
41858.1	XR PV Panel Racking System	Ironridge XR Flush Mount Photovoltaic Panel Racking System with Ironridge FlashFoot2 Roof Attachments.
Limits of Use **Approved for use in HVHZ:** Yes **Approved for use outside HVHZ:** Yes **Impact Resistant:** N/A **Design Pressure:** N/A **Other:** Please see Installation Drawings and Eval Report for Limits of Use.		**Installation Instructions** FL41858_R1_II_XR FF2 Dwg2.pdf Verified By: Scott Wolters FLPE# 62354 Created by Independent Third Party: Yes **Evaluation Reports** FL41858_R1_AE_XR FF2 Eval2.pdf Created by Independent Third Party: Yes
41858.2	XR PV Panel Racking System	Ironridge XR Flush Mount Photovoltaic Panel Racking System with Ironridge Flashvue Roof Attacnments.
Limits of Use **Approved for use in HVHZ:** Yes **Approved for use outside HVHZ:** Yes **Impact Resistant:** N/A **Design Pressure:** N/A **Other:** Please see Installation Drawings and Eval Report for Limits of Use.		**Installation Instructions** FL41858_R1_II_XR FV Dwg2.pdf Verified By: Scott Wolters FLPE# 62354 Created by Independent Third Party: Yes **Evaluation Reports** FL41858_R1_AE_XR FV Eval2.pdf Created by Independent Third Party: Yes
41858.3	XR PV Panel Racking System	Ironridge XR Flush Mount Photovoltaic Panel Racking System with Quickmount L-Mount Roof Attachments.
Limits of Use **Approved for use in HVHZ:** Yes **Approved for use outside HVHZ:** Yes **Impact Resistant:** N/A **Design Pressure:** N/A **Other:** Please see Installation Instructions and Eval Report for Limits of Use.		**Installation Instructions** FL41858_R1_II_XR LF Dwg2.pdf Verified By: Scott Wolters FLPE# 62354 Created by Independent Third Party: Yes **Evaluation Reports** FL41858_R1_AE_XR LF Eval2.pdf Created by Independent Third Party: Yes
41858.4	XR PV Panel Racking System	Ironridge XR Flush Mount Photovoltaic Panel Racking System with Quickmount Q-Base Roof Attachments.
Limits of Use **Approved for use in HVHZ:** Yes **Approved for use outside HVHZ:** Yes **Impact Resistant:** N/A **Design Pressure:** N/A **Other:** Please see Installation Instructions and Eval Report for Limits of Use.		**Installation Instructions** FL41858_R1_II_XR QB Dwg2.pdf Verified By: Scott Wolters FLPE# 62354 Created by Independent Third Party: Yes **Evaluation Reports** FL41858_R1_AE_XR QB Eval2.pdf Created by Independent Third Party: Yes
41858.5	XR PV Panel Racking System	Ironridge XR Flush Mount Photovoltaic Panel Racking System with Ironridge Knockout Tile and L-Foot Roof Attachments.
Limits of Use **Approved for use in HVHZ:** Yes **Approved for use outside HVHZ:** Yes **Impact Resistant:** N/A **Design Pressure:** N/A **Other:** Please see Installation Instructions and Eval Report for Limits of Use.		**Installation Instructions** FL41858_R1_II_XR TKO Dwg2.pdf Verified By: Scott Wolters FLPE# 62354 Created by Independent Third Party: Yes **Evaluation Reports** FL41858_R1_AE_XR TKO Eval2.pdf Created by Independent Third Party: Yes
41858.6	XR PV Panel Racking System	Ironridge XR Flush Mount Photovoltaic Panel Racking System with Quickmount Halo Ultragrip Roof Attachments.
Limits of Use **Approved for use in HVHZ:** Yes **Approved for use outside HVHZ:** Yes **Impact Resistant:** N/A **Design Pressure:** N/A **Other:** Please see Installation Instructions and Eval Report for Limits of Use.		**Installation Instructions** FL41858_R1_II_XR HUG Dwg2.pdf Verified By: Scott Wolters FLPE# 62354 Created by Independent Third Party: Yes **Evaluation Reports** FL41858_R1_AE_XR HUG Eval2.pdf Created by Independent Third Party: Yes

Back Next

Contact Us :: 2601 Blair Stone Road, Tallahassee FL 32399 Phone: 850-487-1824

The State of Florida is an AA/EEO employer. Copyright 2007-2013 State of Florida. :: Privacy Statement :: Accessibility Statement :: Refund Statement

Under Florida law, email addresses are public records. If you do not want your e-mail address released in response to a public-records request, do not send electronic mail to this entity. Instead, contact the office by phone or by traditional mail. If you have any questions, please contact 850.487.1395. *Pursuant to Section 455.275(1), Florida Statutes, effective October 1, 2012, licensees licensed under Chapter 455, F.S. must provide the Department with an email address if they have one. The emails provided may be used for official communication with the licensee. However email addresses are public record. If you do not wish to supply a personal address, please provide the Department with an email address which can be made available to the public. To determine if you are a licensee under Chapter 455, F.S., please click here .

Product Approval Accepts:

Credit Card
Safe
SECURITYMETRICS

WOLTERS ENGINEERING

ENGINEERING, DRAFTING, CONSULTING

15211 97th Road N
West Palm Beach, FL 33412
Ph/Fx: (561) 225-1982

Monday, December 19, 2022

Florida Building Commission
1940 North Monroe Street
Tallahassee, FL 32399

Re: Ironridge PV Panel Racking Systems

Dear Sir or Madam,

This letter is to confirm that I have no financial interest in the Ironridge company, or with any of their employees. I also have no financial interest in Intertek B&C, with Tyler Westerling PE, With Atlantic & Caribbean Roof Consulting, or with Randall Fowler, PE.

If you have any questions or need more information please contact me.

Thank you,

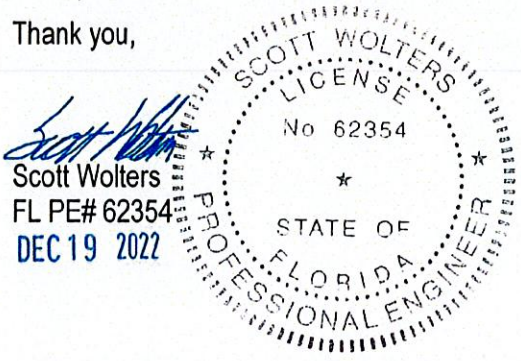

Scott Wolters
FL PE# 62354
DEC 19 2022

WOLTERS ENGINEERING

ENGINEERING, DRAFTING, CONSULTING

15211 97th Road N
West Palm Beach, FL 33412
Ph/Fx: (561) 225-1982

PRODUCT EVALUATION

PRODUCT: IRONRIDGE XR FLUSH MOUNT PHOTOVOLTAIC PANEL RACKING SYSTEM WITH QUICKMOUNT Q-BASE ROOF ATTACHMENTS

MANUFACTURER: IRONRIDGE
28357 INDUSTRIAL BLVD
HAYWARD, CA 94545

To all concerned,

The XR Flush Mount Photovoltaic Panel Racking System with Quickmount Q-Base Roof Attachments, manufactured by Ironridge, has been tested per ASTM D7147 by Atlantic & Caribbean Roof Consulting and per TAS 100(A) by Intertek B&C, with results shown in test reports ACRC 19-0207 and M9042.04-301, respectively. I have reviewed the testing listed and find it is equivalent to TAS 100(A)-23 and D7147-11(2018).

Technical Documentation:

1. Drawing "XR-QB" dated 10/18/23 (Rev. 1), signed and sealed by Scott Wolters, PE.
2. Test Reports listed above by Intertek B&C. signed and sealed by Tyler Westerling, PE
3. Test Reports listed above by ACRC, signed and sealed by Randall Fowler, PE
4. Supplemental Calculations to support "XR-QB", signed and sealed by Scott Wolters, PE.

I have reviewed this submittal per the requirements of FAC Product Approval Rule Chapter 61G20-3.005 (4). Based on the limitations listed below and those provided in the documents above, this product meets all the requirements of the 8th Edition (2023) Florida Building Code generally, and chapter 15 specifically, including the HVHZ provisions.

Limitations: This PV Panel Racking System is approved for use inside and outside of the HVHZ. Please see Drawing XR-QB for Max Design Pressures and other Limits of Use.

Other Limitations:

1. Fire classification is not a part of this evaluation. Refer to a current Approved Roofing Materials Directory for fire ratings of this product.
2. Design of substrate is by others and is not a part of this evaluation.
3. Existing roofing is not a part of this evaluation.

If you have any questions or need more information concerning this approval, please contact me.

Thank you,

Scott Wolters
FL PE# 62354

STATE OF LICENSE No 62354

OCT 18 2023

IRONRIDGE XR FLUSH MOUNT PHOTOVOLTAIC PANEL RACKING SYSTEM WITH QUICKMOUNT Q-BASE ROOF ATTACHMENTS

GENERAL NOTES:

1. THIS SYSTEM MEETS ALL OF THE REQUIREMENTS OF THE 8TH EDITION (2023) FLORIDA BUILDING CODE, INCLUDING THE HVHZ PROVISIONS.
2. THIS SYSTEM HAS BEEN TESTED PER TAS 100(A) AND ASTM D7147. IT IS NOT A PART OF THE BUILDING ENVELOPE, AND IMPACT RESISTANCE IS NOT REQUIRED.
3. THIS SYSTEM SHALL BE INSTALLED PER THE IRONRIDGE XR FLUSH MOUNT INSTALLATION MANUAL.
4. THE PV PANELS ARE BY OTHERS AND ARE NOT A PART OF THIS APPROVAL.
5. RAIL SPACING TO BE AS SPECIFIED BY THE PV PANEL MANUFACTURER'S INSTALLATION INSTRUCTIONS.
6. THE DESIGN OF THE ROOF SUBSTRATE IS THE RESPONSIBILITY OF THE ENGINEER OF RECORD OR OTHER SPECIALTY ENGINEER, AND IS NOT A PART OF THIS APPROVAL. THE SUBSTRATE MUST SAFELY TRANSMIT THE LOADS APPLIED TO THIS SYSTEM TO THE BUILDING STRUCTURE.
7. FIRE RATINGS OR FIRE RESISTANCE IS NOT A PART OF THIS REVIEW.
8. ALL ANCHORS SECURING THE SYSTEM TO PRESSURE TREATED WOOD SHALL BE CAPABLE OF RESISTING CORROSION CAUSED BY THE CHEMICALS IN THE WOOD.
9. MATERIALS INCLUDING BUT NOT LIMITED TO STEEL/METAL SCREWS THAT COME INTO CONTACT WITH OTHER DISSIMILAR MATERIALS SHALL BE PROTECTED PER FBC REQUIREMENTS.
10. NO INCREASE IN ALLOWABLE STRESS HAS BEEN USED IN THE DESIGN OF THIS PRODUCT. Cd=1.6 WAS USED FOR WOOD SCREWS ONLY.

WINDLOAD NOTES:

1. DESIGN WINDLOADS MUST BE CALCULATED BY A LICENSED PROFESSIONAL ENGINEER OR ARCHITECT FOR EACH PROJECT, PER ASCE 7-22 SECTION 29.4.4. DESIGN (ASD) WINDLOADS MAY NOT EXCEED THE ALLOWABLE WINDLOADS SHOWN IN THIS CHART.
2. PANEL SYSTEM LOCATION, HEIGHT, AND SPACING MUST MEET THE REQUIREMENTS OF ASCE 7-22 SECTION 29.4.4. WINDLOADS ACT NORMAL TO THE SURFACE OF THE PV PANEL SYSTEM.
3. OTHER CONFIGURATIONS REQUIRE PROJECT SPECIFIC ANALYSIS BY A LICENSED PROFESSIONAL ENGINEER OR ARCHITECT.
4. ALLOWABLE (ASD) WINDLOADS ARE BASED ON ANCHORING IN WOOD RAFTERS WITH S.G.=0.45 MIN.

ALLOWABLE WINDLOADS

TWO RAIL SYSTEM						THREE RAIL SYSTEM					
PANEL WIDTH (in)	PANEL LENGTH (in)	ANCHOR SPAN (L) (in)	XR-10 RAIL (+/- psf)	XR-100 RAIL (+/- psf)	XR-1000 RAIL (+/- psf)	PANEL WIDTH (in)	PANEL LENGTH (in)	ANCHOR SPAN (L) (in)	XR-10 RAIL (+/- psf)	XR-100 RAIL (+/- psf)	XR-100 RAIL (+/- psf)
45	67 1/2	16	90	90	90	45	67 1/2	16	135.0	135.0	135.0
		24	65.4	90	90			24	98.1	135.0	135.0
		32	56.1	90	90			32	84.2	135.0	135.0
		36	49.9	90	90			36	74.9	135.0	135.0
		48	37.4	85.6	90			48	56.1	128.4	135.0
		64	28.1	64.2	75.9			64	42.2	96.3	113.9
		72	23.7	54	66.1			72	35.6	81.0	99.2
	80	16	75.9	75.9	75.9		80	16	113.9	113.9	113.9
		24	55.2	75.9	75.9			24	82.8	113.9	113.9
		32	47.3	75.9	75.9			32	71.0	113.9	113.9
		36	42.1	75.9	75.9			36	63.2	113.9	113.9
		48	31.6	72.2	75.9			48	47.4	108.3	113.9
		64	23.7	54.2	64.1			64	35.6	81.3	96.2
		72	20	45.6	55.7			72	30.0	68.4	83.6
	86	16	70.6	70.6	70.6		86	16	105.9	105.9	105.9
		24	51.3	70.6	70.6			24	77.0	105.9	105.9
		32	44	70.6	70.6			32	66.0	105.9	105.9
		36	39.1	70.6	70.6			36	58.7	105.9	105.9
		48	29.4	67.2	70.6			48	44.1	100.8	105.9
		64	22	50.4	59.6			64	33.0	75.6	89.4
		72	18.6	42.4	51.9			72	27.9	63.6	77.9
	92 1/2	16	65.7	65.7	65.7		92 1/2	16	98.6	98.6	98.6
		24	47.7	65.7	65.7			24	71.6	98.6	98.6
		32	40.9	65.7	65.7			32	61.4	98.6	98.6
		36	36.4	65.7	65.7			36	54.6	98.6	98.6
		48	27.3	62.5	65.7			48	41.0	93.8	98.6
		64	20.5	46.9	55.5			64	30.8	70.4	83.3
		72	17.3	39.4	48.2			72	26.0	59.1	72.3
LANDSCAPE LAYOUT:											
45	92 1/2	16	65.7	65.7	65.7	45	92 1/2	16	98.6	98.6	98.6
		24	52.9	65.7	65.7			24	79.4	98.6	98.6
		32	40.8	65.7	65.7			32	61.2	98.6	98.6
		36	36	65.7	65.7			36	54.0	98.6	98.6
		48	24.2	55	65.7			48	36.3	82.5	98.6
		64	20.5	46.9	65.7			64	30.8	70.4	98.6
		72	18.2	41.7	65.7			72	27.3	62.6	98.6

THREE RAIL SYSTEM:

TWO RAIL SYSTEM:

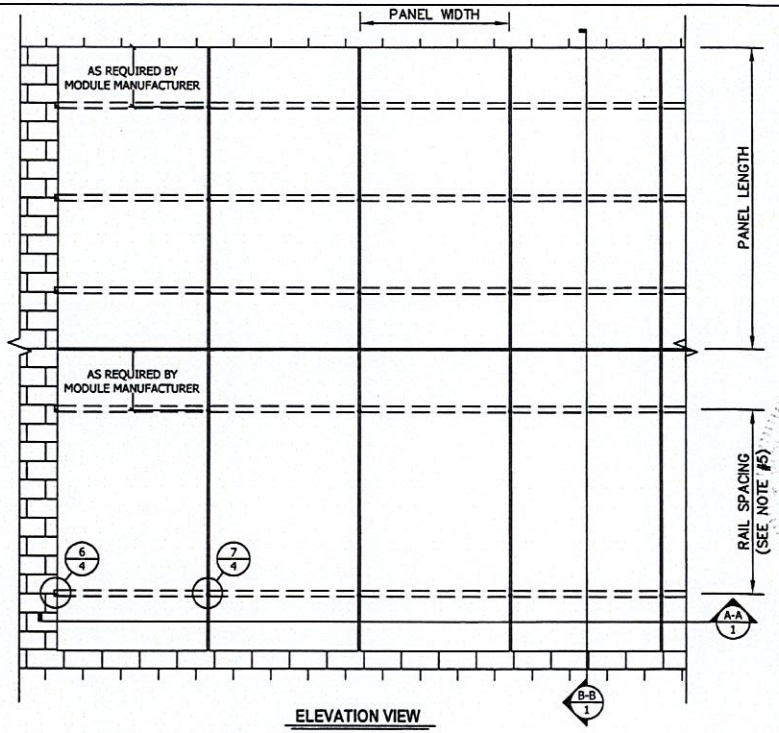

ELEVATION VIEW

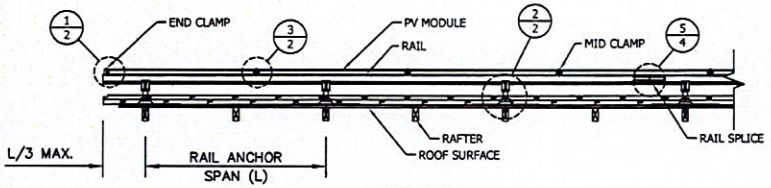

SECTION A-A

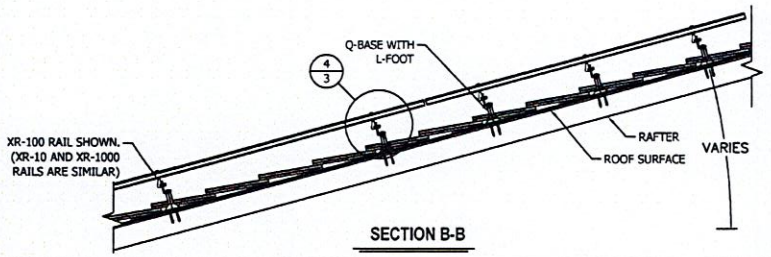

SECTION B-B

REV.#	DATE	PRINTS ISSUED FOR
—		
—		
—		
—		
—		
1	10/18/23	2023 CODE UPDATE
—	12/19/22	1ST SUBMITTAL

SEAL: FL PE# 82354 — STATE OF FLORIDA — OCT 18 2023

SCOTT WOLTERS
FL PE# 82354
WOLTERS ENGINEERING
(COA# 27194)
15211 97TH ROAD N
WEST PALM BEACH, FL 33412
(561) 225-1982

IRONRIDGE
28357 INDUSTRIAL BLVD.
HAYWARD, CA 94545
PHONE: (800) 227-9523
info@ironridge.com

DWG: XR-QB

SHEET: 1/9

IRONRIDGE XR FLUSH MOUNT PHOTOVOLTAIC PANEL RACKING SYSTEM WITH QUICKMOUNT Q-BASE ROOF ATTACHMENTS

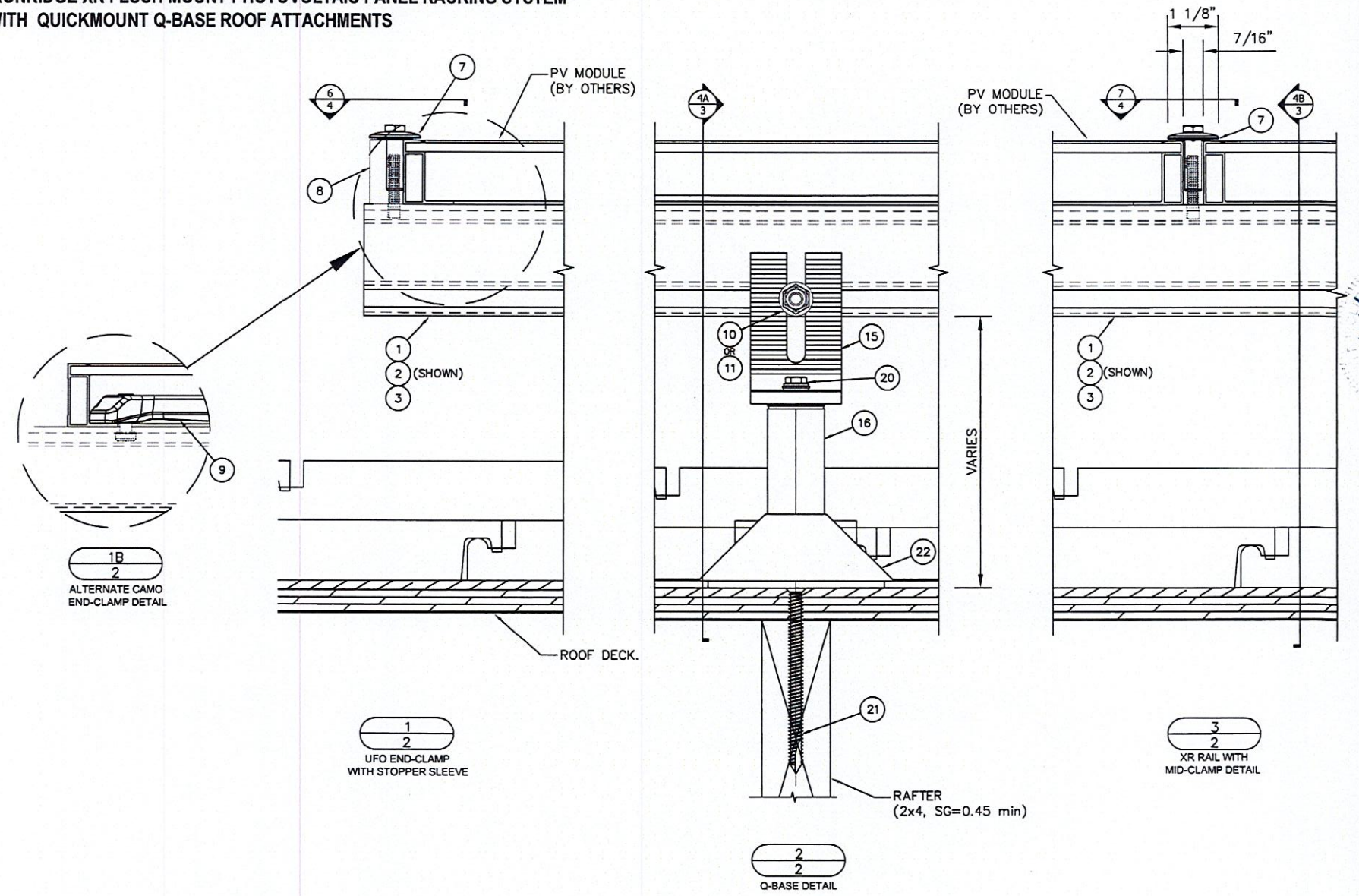

1B/2 ALTERNATE CAMO END-CLAMP DETAIL

1/2 UFO END-CLAMP WITH STOPPER SLEEVE

2/2 Q-BASE DETAIL

3/2 XR RAIL WITH MID-CLAMP DETAIL

REV.#	DATE	PRINTS ISSUED FOR
–	10/18/23	2023 CODE UPDATE
1	12/19/22	1ST SUBMITTAL

SCOTT WOLTERS
FL PE# 82354
WOLTERS ENGINEERING
(COA# 27194)
15211 97TH ROAD N.
WEST PALM BEACH, FL 33412
(561) 225-1982

SEAL: STATE OF FLORIDA SCOTT WOLTERS No. 82354 OCT 18 2023

IRONRIDGE
28357 INDUSTRIAL BLVD.
HAYWARD, CA 94545
PHONE: (800) 227-9523
info@ironridge.com

DWG: XR-QB

SHEET: 2/9

IRONRIDGE XR FLUSH MOUNT PHOTOVOLTAIC PANEL RACKING SYSTEM WITH QUICKMOUNT Q-BASE ROOF ATTACHMENTS

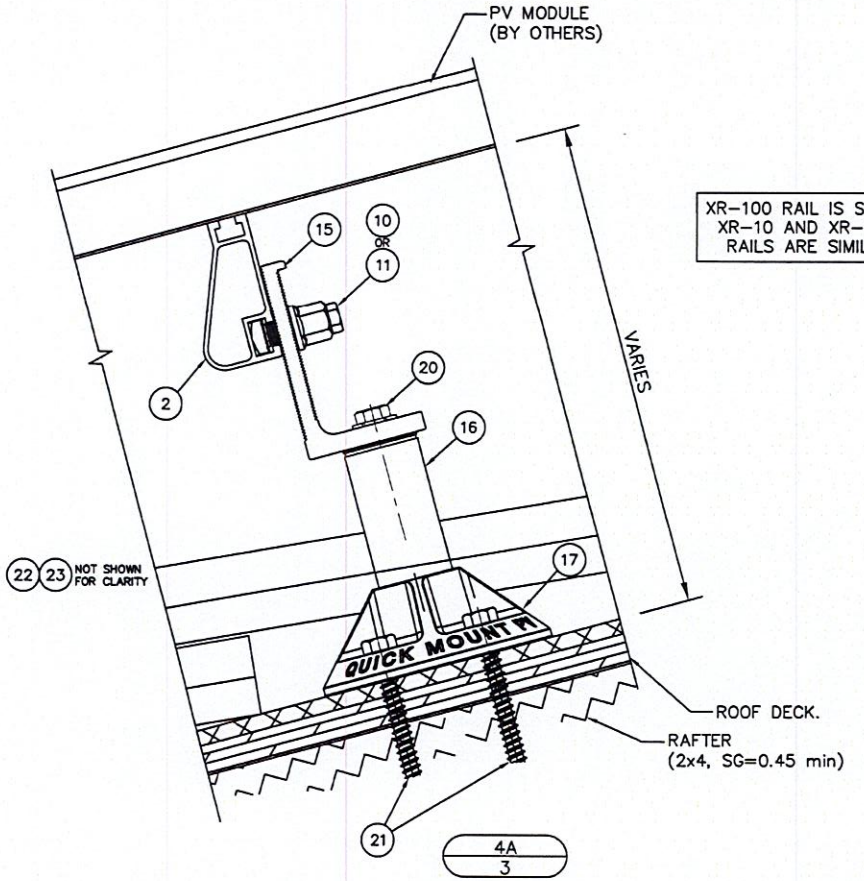

4A
3
XR RAIL AND
Q-BASE DETAIL

XR-100 RAIL IS SHOWN.
XR-10 AND XR-1000
RAILS ARE SIMILAR.

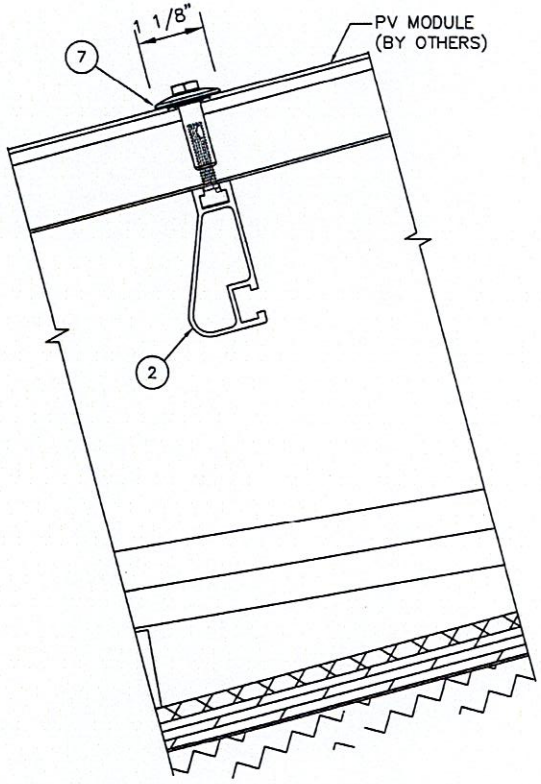

4B
3
XR RAIL AND
MID-CLAMP DETAIL

REV.#	DATE
1	10/18/23
–	12/19/22

2023 CODE UPDATE
1ST SUBMITTAL
PRINTS ISSUED FOR

SEAL: STATE OF OCT 18 2023

SCOTT WOLTERS
FL PE# 62354

WOLTERS ENGINEERING
(COA# 27194)
15211 97TH ROAD N
WEST PALM BEACH, FL 33412
(561) 225-1982

IRONRIDGE

28357 INDUSTRIAL BLVD.
HAYWARD, CA 94545

PHONE: (800) 227-9523
info@ironridge.com

DWG: XR-QB
SHEET: 3/9

IRONRIDGE XR FLUSH MOUNT PHOTOVOLTAIC PANEL RACKING SYSTEM WITH QUICKMOUNT Q-BASE ROOF ATTACHMENTS

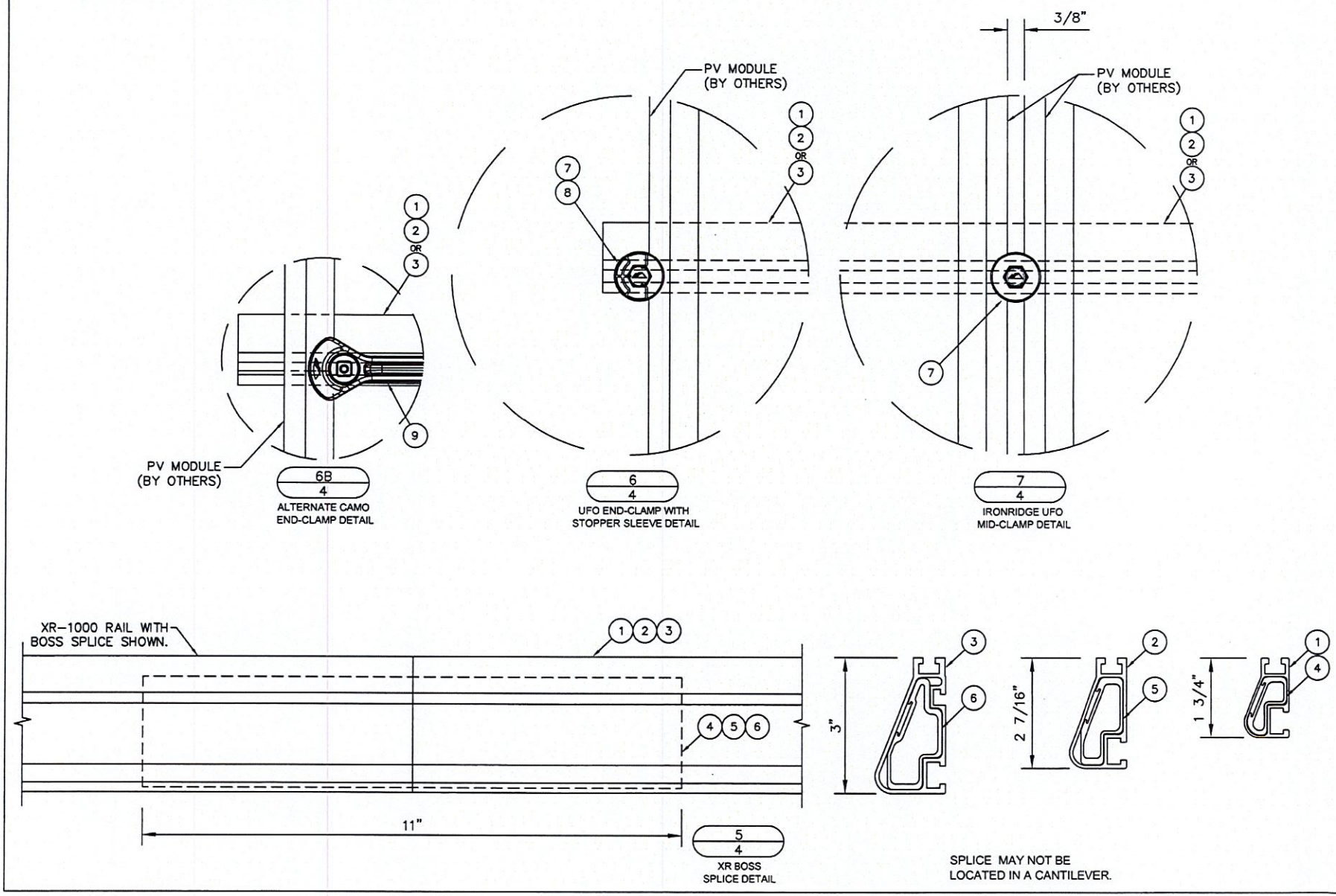

REV.#	DATE
1	10/18/23
–	12/19/22

2023 CODE UPDATE
1ST SUBMITTAL
PRINTS ISSUED FOR

SEAL: STATE OF OCT 18 2023

SCOTT WOLTERS
FL PE# 62354

WOLTERS ENGINEERING
(COA# 27194)
15211 97TH ROAD N
WEST PALM BEACH, FL 33412
(561) 225-1982

IRONRIDGE

28357 INDUSTRIAL BLVD.
HAYWARD, CA 94545

PHONE: (800) 227-9523
info@ironridge.com

DWG: XR-QB
SHEET: 4/9

IRONRIDGE XR FLUSH MOUNT PHOTOVOLTAIC PANEL RACKING SYSTEM WITH QUICKMOUNT Q-BASE ROOF ATTACHMENTS

BILL OF MATERIALS- QuickMount Q-Base		
#	DESCRIPTION	MATERIALS/NOTES
15	OPEN SLOT L-FOOT, MILL OR BLACK	6000 SERIES AL
16	1 1/4" DIAMETER POST (3 1/4" MIN 12" MAX)	6000 SERIES AL
17	QBASE BASE	300 SERIES AL
18	5/16" X 3/4" CAP SCREW, HEX	COATED STEEL
19	5/16" X 1 1/4" OD WASHER	300 SERIES SS & EPDM
20	5/16" X 1" CAP SCREW, HEX	300 SERIES SS
21	5/16" X 3" HEX HEAD LAG SCREW	300 SERIES SS
22	QBASE FLASHING	3000 SERIES AL
23	COUNTER-FLASHING CAP	EPDM

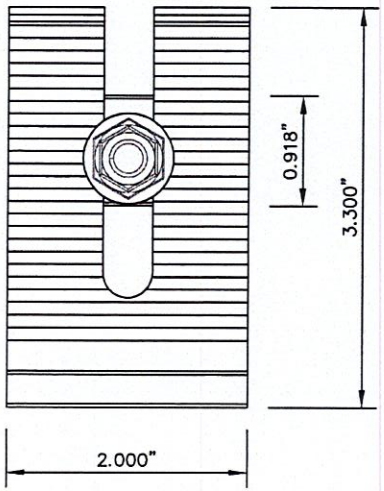

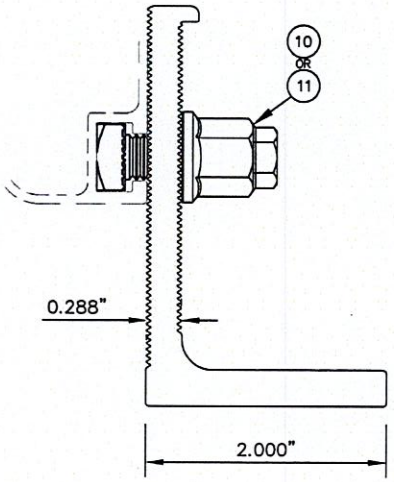

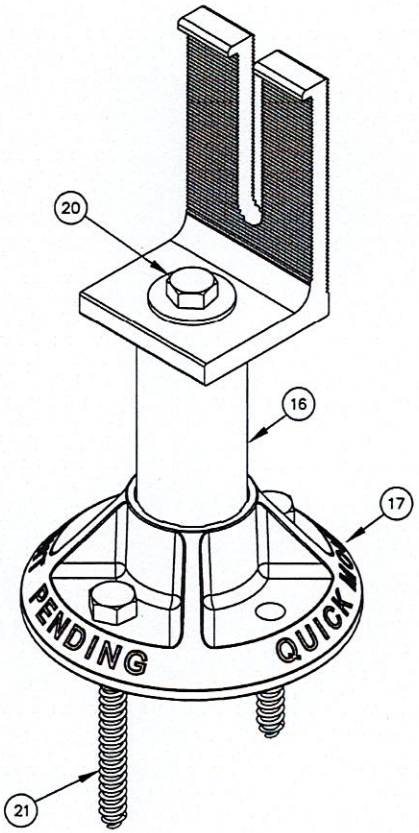

15

REV.#	DATE	PRINTS ISSUED FOR
–	10/18/23	2023 CODE UPDATE
1	12/19/22	1ST SUBMITTAL

SEAL: STATE OF FLORIDA OCT 18 2023

SCOTT WOLTERS
FL PE# 82354

WOLTERS ENGINEERING
(COA# 27194)
15211 97TH ROAD N
WEST PALM BEACH, FL 33412
(561) 225-1982

IRONRIDGE

28357 INDUSTRIAL BLVD.
HAYWARD, CA 94545

PHONE: (800) 227-9523
info@ironridge.com

DWG: XR-QB

SHEET: 5/9

IRONRIDGE XR FLUSH MOUNT PHOTOVOLTAIC PANEL RACKING SYSTEM WITH QUICKMOUNT Q-BASE ROOF ATTACHMENTS

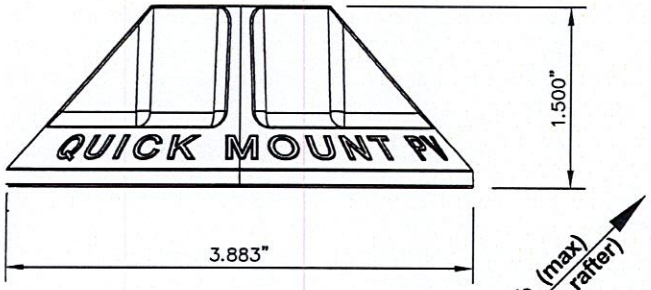

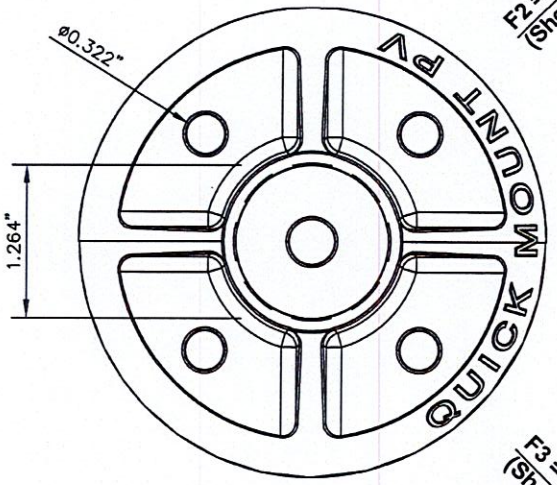

17

F2 = 687.5 lb (max)
(Shear perp. to rafter)

F3 = 950 lb (max)
(Shear along rafter)

F1 = 1212.5 lb (max)
(Direct Tension/Uplift)

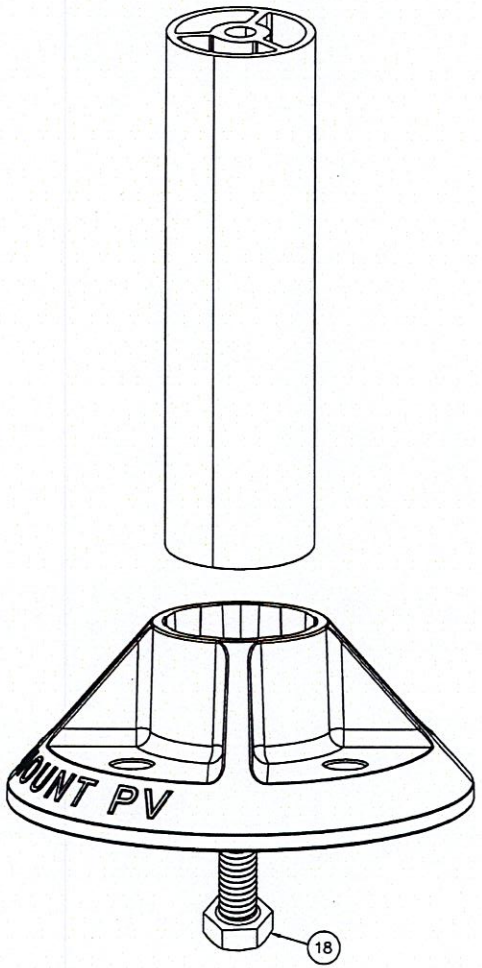

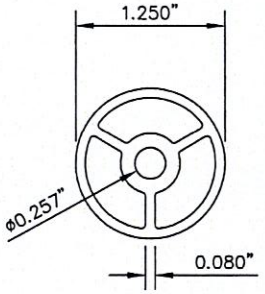

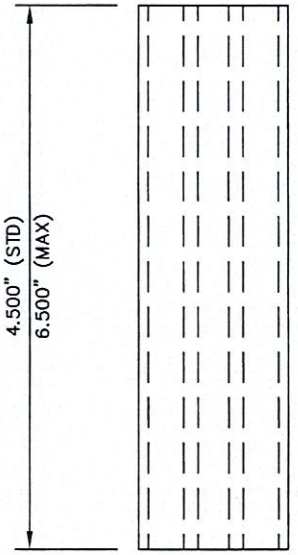

16

ANCHOR CAPACITY:

ANCHOR CAPACITIES LISTED ARE PER FLPA# 29846.

REV.#	DATE	PRINTS ISSUED FOR
–		
–		
–		
–		
–		
1	10/18/23	2023 CODE UPDATE
–	12/19/22	1ST SUBMITTAL

SCOTT WOLTERS
FL PE# 62334

WOLTERS ENGINEERING
(CO# # 27194)
15211 97TH ROAD N
WEST PALM BEACH, FL 33412
(561) 225-1982

SEAL: STATE OF FLORIDA SCOTT WOLTERS No. 62334 OCT 18 2023

IRONRIDGE
28357 INDUSTRIAL BLVD.
HAYWARD, CA 94545
PHONE: (800) 227-9523
info@ironridge.com

DWG: XR-QB

SHEET: 6/9

IRONRIDGE XR FLUSH MOUNT PHOTOVOLTAIC PANEL RACKING SYSTEM WITH QUICKMOUNT Q-BASE ROOF ATTACHMENTS

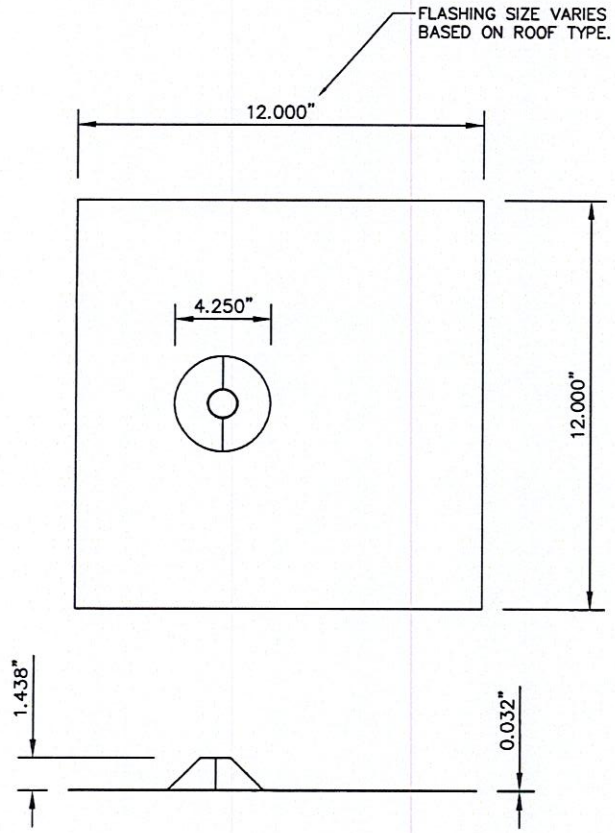

22

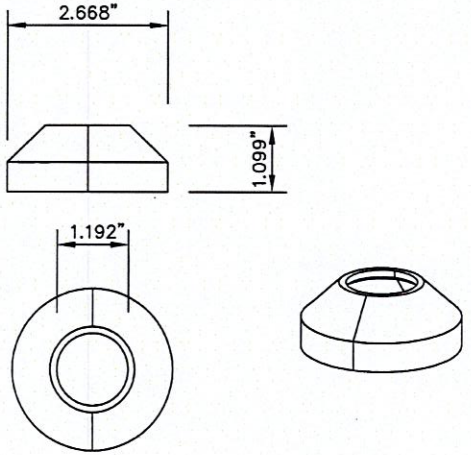

23

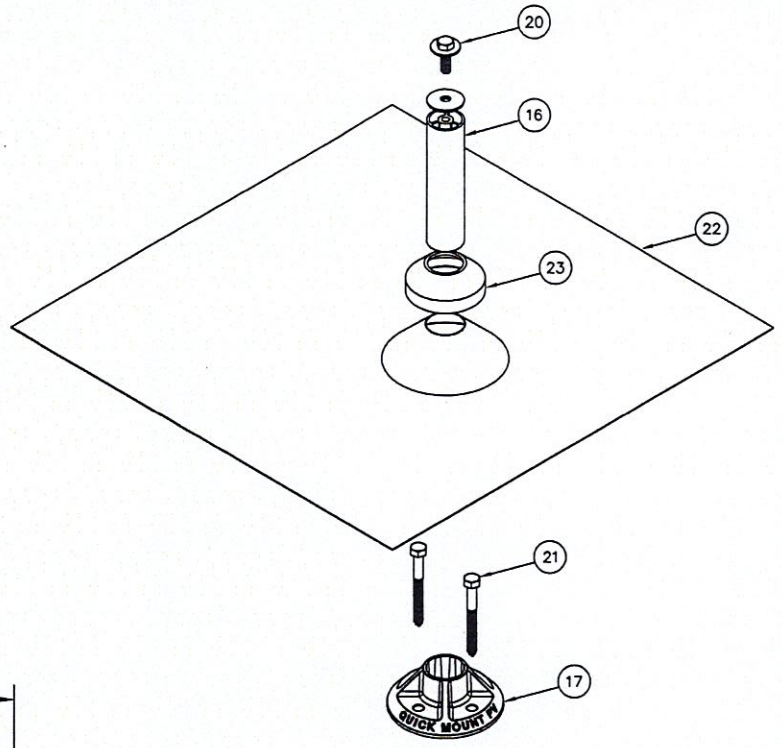

REV.#	DATE	PRINTS ISSUED FOR
—	—	—
—	—	—
—	—	—

IRONRIDGE XR FLUSH MOUNT PHOTOVOLTAIC PANEL RACKING SYSTEM WITH QUICKMOUNT Q-BASE ROOF ATTACHMENTS

BILL OF MATERIALS- XR System		
#	DESCRIPTION	MATERIALS/NOTES
1	XR-10 RAIL	6000 SERIES AL
2	XR-100 RAIL	6000 SERIES AL
3	XR-1000 RAIL	6000 SERIES AL
4	XR-10 BOSS SPLICE	6000 SERIES AL & 300 SERIES SS
5	XR-100 BOSS SPLICE	6000 SERIES AL & 300 SERIES SS
6	XR-1000 BOSS SPLICE	6000 SERIES AL & 300 SERIES SS
7	UFO UNIVERSAL MODULE CLAMP	300 SERIES SS
8	STOPPER SLEEVE	6000 SERIES AL
9	CAMO HIDDEN END CAM	300 SERIES AL & 300 SERIES SS
10	3/8" X 1" SQUARE BOLT BONDING HARDWARE	300 SERIES SS
11	3/8" X 1" T-BOLT BONDING HARDWARE	300 SERIES SS
12	XR-10 RAIL END CAP (OPTIONAL)	POLYMERIC
13	XR-100 RAIL END CAP (OPTIONAL)	POLYMERIC
14	XR-1000 RAIL END CAP (OPTIONAL)	POLYMERIC

FOR 6000 SERIES EXTRUSIONS F_{UT}=38 ksi min, F_Y=34 ksi min.

FOR 300 SERIES STAINLESS STEEL F_Y=65 ksi min.

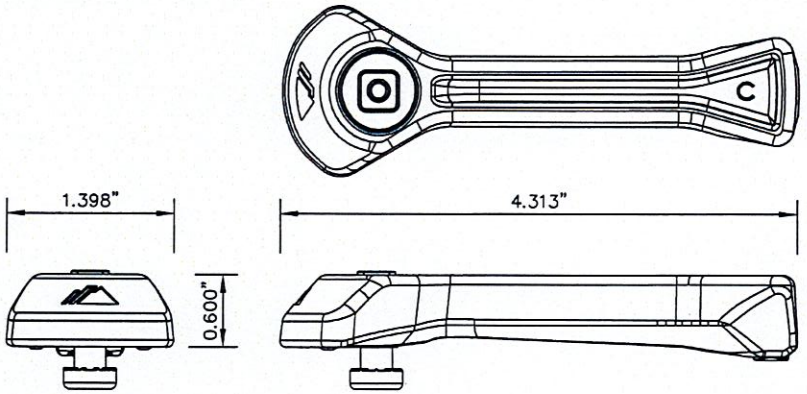

9

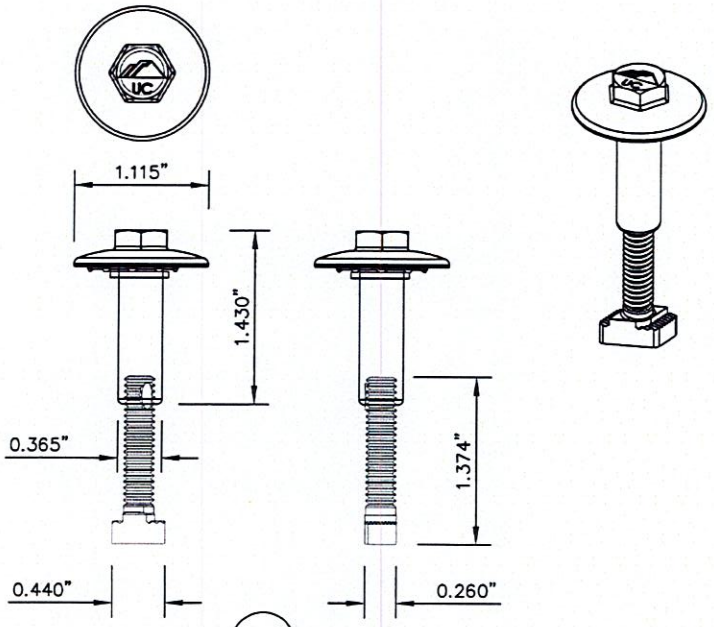

7

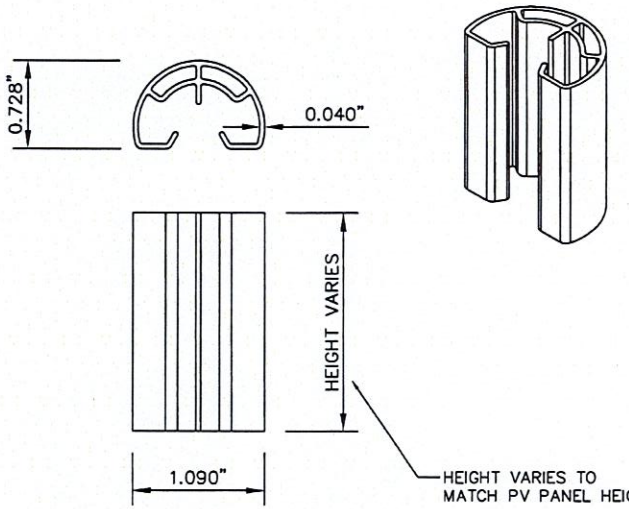

8

REV.#	DATE	PRINTS ISSUED FOR
–	10/18/23	2023 CODE UPDATE
1	12/19/22	1ST SUBMITTAL

SCOTT WOLTERS
FL PE# 82354

WOLTERS ENGINEERING
(CoA # 27341)
1521 ALTON ROAD N.
WEST PALM BEACH, FL 33412
(561) 225-1982

STATE OF FLORIDA
OCT 18 2023

IRONRIDGE

28357 INDUSTRIAL BLVD.
HAYWARD, CA 94545

PHONE: (800) 227-9523
info@ironridge.com

DWG: XR-QB

SHEET: 8/9

IRONRIDGE XR FLUSH MOUNT PHOTOVOLTAIC PANEL RACKING SYSTEM WITH QUICKMOUNT Q-BASE ROOF ATTACHMENTS

DATE	REV.#	PRINTS ISSUED FOR
—	—	—
—	—	—
—	—	—
—	—	—
—	—	—
10/18/23	1	2023 CODE UPDATE
12/19/22	—	1ST SUBMITTAL

SCOTT WOLTERS
FL PE# 82354
WOLTERS ENGINEERING
(COA# 27194)
15211 97TH ROAD N
WEST PALM BEACH, FL 33412
(561) 225-1982

STATE OF FLORIDA
SCOTT WOLTERS
No. 82354
SEAL
OCT 18 2023

IRONRIDGE
28357 INDUSTRIAL BLVD.
HAYWARD, CA 94545
PHONE: (800) 227-9523
info@ironridge.com

DWG: XR-QB
SHEET: 9/9

DRAFT

MEETING MINUTES
CITY OF OPA-LOCKA
HISTORIC ENVIRONMENTAL PRESERVATION BOARD
TUESDAY, JULY 30, 2024
7:00 P.M.

1. CALL TO ORDER

The Historic Environmental Preservation Board (HEPB) meeting was called to order at 7:29 p.m. on Tuesday, July 30, 2024.

An opportunity was given to the public to email the HEPB Clerk prior to the HEPB meeting with any questions/comments/concerns on items to be heard on this evening's Agenda.

2. ROLL CALL

The following members of the Opa-locka Historic Environmental Preservation Board were present: Vice Chair Alexander Van Mecl, Board Member Romer Ferguson III, Board Member Frances MacIntyre, Board Member William Robert Smith, and Board Member Nikisha Williams. Also present were Planning and Community Development Director Gregory Gay, Assistant City Attorney Jordan Gary, and Board Clerk Diana Cheng.

Absent Board Members: Chair Mykeshia Fenn and Board Member Zamarr Brown.

3. MOMENT OF SILENCE

All present observed a moment of silence.

4. PLEDGE OF ALLEGIANCE

The Pledge of Allegiance was recited.

5. ADD-ON ITEM(S)

None.

6. APPROVAL OF MINUTES

- **HEPB 04-11-24**

Motion made by Board Member Williams, seconded by Board Member MacIntyre, to approve the minutes. In a roll call vote, the **motion** passed unanimously (5-0).

7. PUBLIC COMMENTS (Agenda Items Only)

None.

8. RESOLUTIONS:

1. **A RESOLUTION OF THE CITY COMMISSION OF THE CITY OF OPA-LOCKA, FLORIDA, APPROVING THE RECOMMENDATION OF THE HISTORIC ENVIRONMENTAL PRESERVATION BOARD TO ISSUE A SPECIAL CERTIFICATE OF APPROPRIATENESS FOR THE STRUCTURE AT 721 SHARAR AVENUE FOR THE INSTALLATION OF 19 WINDOWS AND 2 DOORS ON THIS REGISTERED HISTORIC PROPERTY; PROVIDING FOR AN EFFECTIVE DATE.**

Board Member Williams requested clarification of whether or not the windows to be installed on the historic property were hurricane-resistant. Planning and Community Development Director Gregory Gay replied that the property owner is making a “one-for-one” change to its windows, which ensures that no stylistic changes will be made to the property. He added that if the owner were not installing impact-resistant windows, they would need to place additional protection over the structure’s windows.

Board Member Smith advised that including photos of the subject property and the proposed windows in the Board members’ information packets would have been helpful in allowing them to determine the appropriateness of the request. Director Gay confirmed that this will be done going forward.

Motion made by Board Member Williams, seconded by Board Member MacIntyre, to approve. In a roll call vote, the **motion** passed unanimously (5-0).

2. **A RESOLUTION OF THE CITY COMMISSION OF THE CITY OF OPA-LOCKA, FLORIDA, APPROVING THE RECOMMENDATION OF THE HISTORIC ENVIRONMENTAL PRESERVATION BOARD TO ISSUE A SPECIAL CERTIFICATE OF APPROPRIATENESS FOR THE STRUCTURE AT 806 JANN AVENUE TO ALLOW FOR THE INSTALLATION OF A PHOTOVOLTAIC SOLAR SYSTEM ON THE ROOF OF THE REGISTERED HISTORIC PROPERTY; PROVIDING FOR AN EFFECTIVE DATE.**

Vice Chair Van Mecl recused himself from hearing or voting upon the Item and left the dais. He ceded the gavel to Board Member Williams at this time.

Board Member Williams asked if the solar panels would be visible or would be placed flat on the roof. Director Gay observed that due to the nature of solar panel installation, it is likely that a portion of the panels facing the south may be visible from the public right-of-way. He was not certain of whether or not the panels may be adjustable.

Motion made by Board Member Smith, seconded by Board Member MacIntyre, to approve. In a roll call vote, the **motion** passed unanimously (4-0). (Vice Chair Van Mecl recused himself from hearing or voting upon this Item.)

Vice Chair Van Mecl returned to the Board at this time.

9. DISCUSSIONS & PRESENTATIONS

Director Gay stated that a conference of the National Alliance of Preservation Commissions is scheduled to take place in West Palm Beach on Wednesday, July 31 through Sunday, August 4, 2024. He asked if any Board members planned to attend.

Board Member MacIntyre advised that although she would not be able to attend in person, a registration fee has been paid for a City Staff member if they wish to attend.

Vice Chair Van Mecl stated that he plans to attend the conference and give a lecture on the City's history, with an emphasis on inventory, archiving, and documenting historic sites. The lecture is scheduled for Sunday, August 4, 2024 at 12:00 p.m. He encouraged other Board members to attend if possible. Board Member Williams suggested that the offer of attendance be expanded to include other City residents, including City Commissioners.

Director Gay continued that there have been discussions of the process by which Certificates of Appropriateness are issued. The rules currently require most activities addressing historic properties to be brought before the HEPB. Staff is working to determine how this process could be modified. He concluded that he would like to bring the proposed modifications back to the next Board meeting for presentation.

Director Gay further clarified that the proposed changes include the following:

- Certain types of minor repairs would go through an administrative process for their Certificate of Appropriateness, which would be handled by Planning and Community Development Staff
- Larger, more significant items will continue to be brought before the HEPB

Board Member MacIntyre recommended outreach to the Coral Gables Historic Preservation Board, pointing out that their review process is divided between Staff and their board. Vice Chair Van Mecl recalled that in the past, the Board has discussed using Miami-Dade County's matrix for administrative and Board approval processes.

Director Gay continued that the City's Historic Preservation Grant is now available to owners of historic homes. Staff has hand-delivered information on this grant to many of these properties. The grant will help owners make improvements to their historic homes. Applications will be brought before the HEPB and the City Commission for approval.

Director Gay added that there may also be additional funds provided through the 10 North Group, formerly known as the Opa-locka Community Development Corporation, which has matched the City's grant amount of $100,000. The City is working through details on how they may accept the additional funds.

Board Member Williams observed that not all City advisory boards regularly bring reports about their activities to the City Commission, and suggested that a Board member consider sharing information on the Historic Preservation Grant with the City's elected officials. Vice Chair Van Mecl stated that he would provide this report to the Commission.

Vice Chair Van Mecl continued that he also felt the Board is overdue in providing an update on the City's historic identity, including the work recently done by University of Florida faculty and students to document the conditions of Opa-locka's historic properties, both registered and unregistered. This may be helpful in justifying the use of City funds toward saving historic structures. He proposed that the Board members and City Staff prepare to make a presentation to the City Commission in September.

Vice Chair Van Mecl requested more information on the grant program. He also asked for an update on the consideration of issuing new markers, pointing out that the City Commission recently approved the designation of the Harry Hurt House as a historic landmark.

Opa-locka Economic Development Director Sol Bankole stated that there are roughly 30 registered historic homes in the City. He estimated that the grant process would continue throughout summer and fall 2024 and would ultimately come before the HEPB and the City Commission.

Vice Chair Van Mecl requested more information on the program's timeline. Director Bankole replied that funds remaining from the $100,000 awarded to the grant program would be carried over into fiscal year (FY) 2024-2025.

Vice Chair Van Mecl also asked for more information on the placement of historic plaques, beginning with the Harry Hurt House. Director Bankole stated that he plans to discuss this further with Director Gay.

Vice Chair Van Mecl briefly described the design of the City's historic plaques, which follow the design recommended by the United States National Park Service. He requested feedback on whether to retain this design for the 2024-2025 program or modify it. He also noted that some historic properties no longer have their plaques, and asked whether the Board members felt new plaques should be provided to the subject properties.

Board Member Smith commented that some information to be added to the historic plaques were the year in which the home was built, the year in which it was designated as historic, and the architect. He also recommended including the City's seal in the design.

Board Member MacIntyre advised that it may be possible to secure grant funding to produce plaques. She recommended less expensive ceramic plaques rather than bronze.

Board Member Williams suggested that the existing plaque design is suitable and she did not feel their redesign should be a priority.

Vice Chair Van Mecl stated that a brass plaque of the existing design would cost approximately $420 to $450. While he did not want to prioritize the disbursement of several plaques, he was in favor of providing one to a property owner at 305 Dunad Avenue who recently received a historic designation. He concluded that there should be an immediate consideration of plaque design so the City does not miss the opportunity to further publicize historic preservation and the grant program.

Vice Chair Van Mecl requested an update on the restoration of Opa-locka's Historic City Hall. Director Gay replied that the City hopes to complete this project by the end of calendar year 2024, and suggested that the City's Capital Improvement Manager present to the Board at their September 2024 meeting.

10. BOARD COMMENTS

Board Member MacIntyre recalled that a number of issued were discussed at the Board's April 11, 2024 meeting, including:

- Certified Local Government application
- 2024 Tree City USA status
- Including historic preservation on the City's website
- Urban Forestry update
- Bird sanctuary status
- Demolition of a property on Sesame Street
- Rules and criteria for Board members

Director Gay advised that Staff has been aggressively working on all of these items and will bring them back at the next Board meeting.

Vice Chair Van Mecl recommended a Resolution to amend the number of Board members, which is currently set at nine. This has made it difficult for the Board to reach a quorum at times. He requested that this be discussed further as soon as possible. Director Gay confirmed that Staff plans to present this Item in September as well.

The Vice Chair also recognized Board Member Williams for her service as a Board member.

Board Member Williams stated that there are a number of homes in the City which are historic but have not been designated as such. She expressed concern that the City may lose some of these properties if modifications are made to them without taking their historic nature into consideration.

Board Member Williams also reminded the Board that its Charter addresses environmental concerns as well as historic preservation. She pointed out that there are both national and local efforts to ensure the planting of trees, which can help combat rising temperatures. She strongly recommended that the Board address the City's tree canopy.

Director Gay reported that Opa-locka's designation as a Tree City USA has been updated and the City has received this award for 2024-2025. He added that the application process has changed, now requiring an annual update for participating municipalities. The City must provide a report on how many trees have been saved, planted, or transplanted in a given year.

Board Member Ferguson recalled that he and Board Member MacIntyre had advocated for the planting of more shade trees in the City. He pointed out that palm trees cannot provide shade.

Vice Chair Van Mecl requested additional information on how to pursue the historic designation of a home without the homeowner's consent.

11. ADJOURNMENT

The meeting was adjourned at 8:20 p.m.

CERTIFICATE OF APPROPRIATENESS

HISTORIC AND ENVIRONMENTAL PRESERVATION BOARD
HEPB COA APPLICATION-CITY OF OPA-LOCKA
PLANNING AND COMMUNITY DEVELOPMENT DEPARTMENT
780 FISHERMAN STREET, OPA-LOCKA, FL 33054

DATE RECEIVED

APPLICATION #_____

HEPB MEETING DATE_____

RESOLUTION #_____

STAFF INITIALS _____

☐ APPROVED

☐ W. CONDITIONS

☐ DENIED

☐ CONTINUED TO: _____

HEPB APPLICATION

☐ SPECIAL COA

☐ SPECIAL CERTIFICATE TO DIG

☐ SPECIAL CERTIFICATE OF APPROVAL

☐ WAIVER

806 JANN AVENUE — DOVE HOUSE
PROPERTY ADDRESS — **HISTORIC PROPERTY NAME**

ALEXANDER JAN VAN MECL
OWNERS NAME

806 JANN AVE, OPA-LOCKA, FL 33054
OWNER'S ADDRESS, CITY, STATE, ZIP CODE

(323) 547-3631
OWNER'S DAYTIME PHONE NUMBER

APPLICANT /AUTHORIZED REPRESENTATIVE (NAME & TITLE)

APPLICANT'S ADDRESS, CITY, STATE, ZIP CODE

APPLICANT'S DAYTIME PHONE NUMBER **APPLICANT'S EMAIL**

APPLICATION TYPE (CHOOSE AS MANY AS APPLICABLE)

☐ NEW CONSTRUCTION ☐ ADDITION ☐ DEMOLITION ☐ AFTER-THE FACT WORK

☐ ALTERATION ☐ LANDSCAPING/PAVING ☐ CONCEPTUAL ☒ OTHER SOLAR INSTALL

☐ PARKING WAIVER ☐ SETBACK WAIVER ☐ WAIVER (OTHER)

INCOMPLETE APPLICATIONS WILL NOT BE ACCEPTED.

The property owner should be present at the HEPB hearing. It is preferred that the owner personally present the project to the HEPB at the meeting. If the owner should choose to have a paid representative present the project on their behalf, that representative must be a registered lobbyist with the City of Opa-locka. For more information on becoming a registered lobbyist, please call the City Clerk's Office at 305.688.4611. (Lobbyist will be asked to provide proof of registration.)

OWNERS ATTESTATION:

I HAVE READ AND UNDERSTAND THE ABOVE INFORMATION AND I CERTIFY TO THE BEST OF MY ABILITY THAT ALL INFORMATION PROVIDED IN THIS APPLICATION AND ATTACHMENTS ARE CORRECT.

[signature] 7/13/2024

SIGNATURE OF PROPERTY OWNER **DATE**

SIGNATURE OF APPLICANT (IF OTHER THAN PROPERTY OWNER DATE

Sponsored by: Interim City Manager

A RESOLUTION OF THE CITY COMMISSION OF THE CITY OF OPA-LOCKA, FLORIDA, APPROVING THE RECOMMENDATION OF THE HISTORIC ENVIRONMENTAL PRESERVATION BOARD TO ISSUE A CERTIFICATE OF APPROPRIATENESS FOR THE STRUCTURE AT 1141 JANN AVENUE TO CONDUCT FULL ROOF REPLACEMENT ON THIS REGISTERED HISTORIC PROPERTY; PROVIDING FOR AN EFFECTIVE DATE.

WHEREAS, pursuant to Ordinance 16-13, the City of Opa-Locka, Florida ("City"), has established a Historic Preservation Ordinance and established the Historic Environmental Tree Preservation Board in order to preserve and protect the City's historic and cultural heritage and to foster civic pride; and

WHEREAS, the Historic Environmental Preservation Board was also established to protect the green environment in the City, especially through the preservation of trees in order to support Arbor Day principles; and

WHEREAS, as required by Miami-Dade County in order to maintain a separate, independent Historic Preservation Ordinance, the City practices a fully functional process and has adopted Ordinance 2022-02 to establish minimum standards for municipal historic preservation programs, as set forth in the Miami-Dade County Historic Preservation Ordinance Section 16A-3.1; and

WHEREAS, the Historic Preservation Ordinance permits issuance of a Special Certificate of Appropriateness for a building permit to allow for a full roof replacement on the registered historic property at 1141 Jann Avenue, within the City, after an approval recommendation by the Historic Environmental Preservation Board, and review and approval by the City Commission in accordance with Ordinance 2022-02; and

WHEREAS, on November 21, 2024, the Historic Environmental Preservation Board held a meeting to, among other business matters, consider a request for a certificate of appropriateness approval for the structure at 1141 Jann Avenue, within the City, to allow for a full roof replacement on the registered historic property at 1141 Jann Avenue on this historic property. After presentation and discussion, the Historic Environmental Preservation Board recommended approval of the Certificate of Appropriateness by 4-0 vote; and

WHEREAS, the City Commission finds it in the best interest of the City and residents to issue a Special Certificate of Appropriateness for the structure at 1141 Jann Avenue, within the City, as provided herein.

NOW, THEREFORE, BE IT ORDAINED BY THE CITY COMMISSION OF THE CITY OF OPA-LOCKA, FLORIDA AS FOLLOWS:

Section 1. The recitals to the preamble herein are incorporated by reference.

Section 2. The City Commission hereby accepts the recommendation of the Historic Environmental Preservation Board to issue a Special Certificate of Appropriateness for the structure at 1141 Jann Avenue, within the City, to allow for a full roof replacement on the registered historic property.

Section 3. If any clause, section, or other part or application of this Ordinance is held by any court of competent jurisdiction to be unconditional or invalid, in part or in application, it shall not affect the validity of the remaining portions or application of this Ordinance.

Section 4. All ordinances or resolutions or parts of ordinances or resolutions in conflict herewith. Are hereby repealed.

PASSED and **ADOPTED** this _____ day of _____, 2024.

_____
John Taylor, Mayor

ATTEST:

_____
Joanna Flores, City Clerk

APPROVED AS TO FORM

AND LEGAL SUFFICIENCY:

_____
Burnadette Norris-Weeks, P.A.
City Attorney

Moved by: _____

Seconded by: _____

VOTE:

Commissioner Bass	_____
Commissioner Santiago	_____
Commissioner Ervin	_____
Vice Mayor Kelley	_____
Mayor Taylor	_____

City of Opa-locka
Agenda Cover Memo

Department Director:	Gregory D. Gay			**Department Director Signature:**		
Interim City Manager:	Shamecca Lawson			**ICM Signature**		
Commission Meeting Date:	12.11.2024		**Item Type:** *(Enter X in box)*	**Resolution**	**Ordinance**	**Other**
				X		
Fiscal Impact: *(Enter X in box)*	**Yes**	**No**	**Resolution Reading:** *(Enter X in box)*		**1st Reading**	**2nd Reading**
					X	
		X	**Public Hearing:** *(Enter X in box)*		**Yes** / **No**	**Yes** / **No**
					X	X
Funding Source: *Account#:*	*(Enter Fund & Dept)* Ex: N/A See Financial Impact section below		**Advertising Requirement:** *(Enter X in box)*		**Yes**	**No**
					X	
ILA Required: *(Enter X in box)*	**Yes**	**No**	**RFP/RFQ/Bid#:**			
	X					
Strategic Plan Related *(Enter X in box)*	**Yes**	**No**	**Strategic Plan Priority Area:** **Enhance Organizational** ☐ **Bus. & Economic Dev** ■ **Public Safety** ☐ **Quality of Education** ☐ **Qual. of Life & City Image** ■ **Communication** ☐		**Strategic Plan Obj./Strategy:** *(list the specific objective/strategy this item will address)*	
	X					
Sponsor Name	Interim City Manager		**Department:** Planning & Community Development		City Manager	

Short Title:

A RESOLUTION OF THE CITY COMMISSION OF THE CITY OF OPA-LOCKA, FLORIDA, APPROVING THE RECOMMENDATION OF THE HISTORIC ENVIRONMENTAL PRESERVATON BOARD TO ISSUE A CERTIFICATE OF APPROPRIATENESS FOR THE STRUCTURE AT 1141 JANN AVENUE TO CONDUCT FULL ROOF REPLACEMENT ON THIS REGISTERED HISTORIC PROPERTY; PROVIDING FOR AN EFFECTIVE DATE.

Staff Summary:

The City has adopted Ordinance 22-02 to establish minimum standards for municipal historic preservation programs and in agreement with Miami-Dade County Historic Preservation Ordinance Section 16A-3.1. The Historic Environmental Preservation Board per Ordinance 22-02, Section 2-570.84 (2) (B) Special Certificate of appropriateness: "For all applications for a special certificate of appropriateness involving the demolition, removal, reconstruction or new construction at an individual site or in a district, a special certificate of appropriateness is required that is issued by recommendation of the Historic Environmental Preservation Board" and review and approval by the City Commission. The Historic Environmental Preservation Board held a meeting on November 21,

2024, to discuss current projects and to consider a request for a certificate of appropriateness approval for the structure at 1141 Jann Avenue to conduct full roof replacement on this registered historic property. After presentation and discussion, the Historic Environmental Preservation Board recommended approval of the Certificate of Appropriateness by 4-0 vote.

BACKGROUND:

The City of Opa-locka established the Opa-locka Historic Preservation Board by Ordinance 81-13 for the purpose of protecting and perpetuating properties worthy of historic preservation. The City adopted Resolution 91-01 and Ordinance 91-02 to identify the properties in the City that were deemed outstanding examples of Moorish architecture, that were built based on the original plans as designed by its founder, Glenn Curtiss and to establish a list of properties that meet the requirements for being of historical, cultural, architectural and archeological significance. The City Commission has determined that it is in the best interests and welfare of the City of Opa-locka and its residents to enact an ordinance that establishes a board that performs the functions of both the Historic Preservation Board and the Environmental Tree Board. The City established the ahistoric Environmental Preservation Board pursuant to Ordinance 16-13 on October 12, 2016 in order to preserve and protect the City's historic and cultural heritage and foster civic pride. The Historic Environmental Preservation Board was also established to protect the green environment within the City, especially, the preservation of its trees in order to support Arbor Day principles. The Historic Environmental Preservation Board held a meeting on January 28, 2021 to introduce new board members, establish Board Chair and Vice-Chair, and to make improvements to the HEPB. Pursuant to Planning & community Development Department Director & Staff meeting with Miami Dade County Historic Preservation Chief, we received notice that independent municipal historic preservation programs were required to adopt the minimum standards as provided by Miami-Dade County regulations, Chapter 16A-3.1. The City Historic Environmental Preservation Legislation, Chapter 2 Article XI, Division 13, Sec 2-570.81 and Sec. 2-570.82 of the City Code of Ordinances concerning the composition, term of office, qualifications, organization, meeting, records standards and established duties and responsibilities of the HEPB.

Financial Impact:

The City will receive permit fee revenue from this item, with the exact amount to be determined in the future. Since this is a one-time installation, the revenue will not have any future impact on the Fund Balance.

Proposed Action:

PCD Staff recommends approval of this Resolution.

Attachment:

Draft Resolution
Ordinance 22-02 HEPB Minimum Standards
HEPB Application for Certificate of Appropriateness – 1141 Jann Avenue
Building Plans to conduct full roof replacement.

Historic

CITY OF Opa-locka

BUILDING DEPARTMENT
730 Fisherman St
Opa-locka, FL 33054
Office: 305-953-2868
www.opalockafl.gov

CITY OF OPA-LOCKA Development & Planning Dept. 9/19/24
Signature:

Date: 9/18/2024 Clerk:

[X] Master Permit 24090054

JOB ADDRESS 1141 JANN AVE

PERMIT APPLICATION

[ ] Sub-Permit

1. Owner Information
Owner MARTHA PAVON
Address 1141 JANN AVE
City OPA LOCKA ST FL Zip 33054
Driver License No. /I.D. P237-960-83-298-0
Phone No. 561-632-8342

2. Contractor Information
Company Name ROOFERS INTERNATIONAL
Qualifier Name GORDON MYERS
Address 1195 N MILITARY TRAIL #2B
City WEST PALM BEACH ST FL Zip 33409
Lic. No. CCC057265 Phone No. 305-924-6032

3. Permit Type (Choose only One)
- [ ] Building
- [ ] Electrical
- [ ] Mechanical
- [ ] Plumbing/Gas
- [ ] Sign
- [X] Roofing

4. Change to an Existing Permit (Choose only One)
- [ ] Change Contractor
- [ ] Extension
- [ ] Renewal
- [ ] Shop Drawing
- [ ] Lost Plans

5. Type of Improvement (Choose only One)
- [ ] New Construction
- [ ] Addition Attached
- [ ] Alteration Interior
- [ ] Alteration Exterior
- [ ] Repair/Replace
- [ ] Demolition/Partial
- [X] Re-roof
- [ ] Driveway
- [ ] Fence
- [ ] Window
- [ ] Door
- [ ] Shutters
- [ ] Pool
- [ ] Shed
- [ ] Other:

6. Architect/Engineer Info
Name
Address
City ST Zip Code
Lic. No. Discipline
Phone No.

7. Contact
Name JOSSELIN CONTRERAS
E-mail ROOFERSINTLPERMITS@OUTLOOK.COM
Phone No. 305-924-6032

8. Legal/Use/Work Value
Folio No. 08-2121-002-3890 No. of Units
Lot Block Subdivision PL NO 1 OPA LOCKA LOT 17 & E25FT LOT 18 BLK 22
Current Use of Property RESIDENTIAL
Description of Work RESIDENTIAL RE-ROOF FLAT 1895 SQFT
Square FT. 1895 Linear FT.
Work Value $14,000 Building Value $136,502
Flood Zone Base Flood Elevation

Application is hereby made to obtain a permit to do the work and/or installations as indicated. I certify that no work or installation has commenced prior to the issuance of a permit and that all work will be performed to meet the standards of all laws regulating construction in this jurisdiction. I understand that a separate permit must be secured for Electrical, Plumbing, Signs, Wells, Pools, Furnaces, Boilers, Heaters, Tanks, Air Conditioning, Driveways, Portable Storage Units, etc.
Owner's Affidavit: I certify that all the foregoing information is accurate, and that work will be done in compliance with all applicable laws regulating construction and zoning.

NOTICE REGARDING BUILDING PERMIT APPLICATIONS

The Completion and submission of a Building Permit Application is a requirement of securing a City Building Permit. The City will rely upon the information contained in the Application in determining whether a City Building Permit should be issued. The submission of inaccurate, misleading, or misrepresented information in the Application shall subject the Building Permit to denial, suspension or revocation, and the individual applying for the permit, to all appropriate fines, penalties and other punishments authorized by law. KINDLY GOVERN YOURSELF ACCORDINGLY.

WARNING TO OWNER: YOUR FAILURE TO RECORD A NOTICE OF COMMENCMENT MAY RESULT IN YOU PAYING TWICE FOR IMPROVMENTS TO YOUR PROPERTY. IF YOU INTEND TO OBTAIN FINANCING, CONSULT WITH YOUR LENDER OR AN ATTORNEY BEFORE RECORDING YOUR NOTICE OF COMMENCEMENT.

Owner Information
MARTHA PAVON — Print Name
MARTHA PAVON — Owners Signature
SWORN TO AND SUBSCRIBED BEFORE ME BY: (PRINT OWNER NAME)
Martha Pavon
BY MEANS OF PHYSICAL PRESENCE NOTARIZATION AND PRODUCED
DL
OR IS PERSONALLY KNOWN.
As identified on this 16th day of Sept 20 24
Notary's Signatures
Printed Name of Notary Josselin Contreras

Qualifier Information
Gordon Myers — Print Name
Gordon Myers — Owners Signature
SWORN TO AND SUBSCRIBED BEFORE ME BY: (PRINT QUALIFIER NAME)
Gordon Myers
BY MEANS OF PHYSICAL PRESENCE NOTARIZATION AND PRODUCED
DL
OR IS PERSONALLY KNOWN.
As identified on this 16th day of September 20 24
Notary's Signatures
Printed Name of Notary Josselin Contreras

JOSSELIN CONTRERAS Notary Public-State of Florida Commission # HH 378887 My Comm. Expires April 18, 2027

DO NOT WRITE BELOW – FOR OFFICE USE ONLY

✓	Trade	Approved/Date	Disapproved/Date
	Zoning		
	Structural		
	Building		
	Electrical		
	Mechanical		
	Plumbing		
	Roofing		
	Flood		
	Publics Works		

Application Includes	Fees $	.00
Zoning		
Structural		
Base Fee		
Scanning		
Technology		
Rework		
Violation		
DBPR/DCA		
Code Compliance		
(-) Upfront Fee		
Balance Due		

Ron DeSantis, Governor

Melanie S. Griffin, Secretary

Florida dbpr

STATE OF FLORIDA
DEPARTMENT OF BUSINESS AND PROFESSIONAL REGULATION

CONSTRUCTION INDUSTRY LICENSING BOARD

THE ROOFING CONTRACTOR HEREIN IS CERTIFIED UNDER THE
PROVISIONS OF CHAPTER 489, FLORIDA STATUTES

MYERS, GORDON W

ROOFERS INTERNATIONAL, INC.
1195 NORTH MILITARY TRAIL 2B
WEST PALM BEACH, FL 33408

LICENSE NUMBER: CCC057265

EXPIRATION DATE: AUGUST 31, 2026

Always verify licenses online at MyFloridaLicense.com

ISSUED: 06/04/2024

Do not alter this document in any form.

This is your license. It is unlawful for anyone other than the licensee to use this document.

24090054
9/18/24

OFFICE COPY
BUILDING DEPARTMENT
City of Opa-locka, FL
Zoning _____
Building _____
Plumbing _____
Electrical _____
Mechanical _____
Public Works _____

The city of bright opportunities
@opalockafl

City of Opa-locka

ROOFING PERMIT FEE-SHEET

High Velocity Hurricane Zone

Permit #_____ **Job Address:** 1141 JANN AVE OPA-LOCKA, FL 33054 **Contractor:** ROOFERS INTERNATIONAL

Please enter the square footage for the roofing work you are performing in the space provided next to the appropriate roof type for your job. Listed below each roof type are the minimum required inspections. If your roof type does not fit in the specific categories listed, please see a building processor or inspector. All roofing systems must be installed as per the Florida Building Code, Manufactures Specification, Product Control Approvals and Protocols.

Under penalties of perjury, I declare that to the best of my knowledge, the facts stated in this document are true. I understand that perjury is a felony of the third degree.

_____ (L.S.)
Signature

Building Use: ☒ Single Family/Duplex (R3) ☐ Multi-Family (#Units_____)(R2) ☐ Commercial (Other)

Application for Roof Type

☐ **New Roof** ☒ **Re-Roof** ☐ **Repair** ☐ **Recovery** ☐ **Maintenance***

Repair required inspections: 1. In Progress
2. Final

CATEGORY 92- LOW SLOPE APPLICATIONS (Gravel, Smooth, Modified, Single Ply EPDM, SPRM)

Fee Code	Description	Fee Calculation	Unit	# of Units	Fee
RF01	Roofing (Groups R2 & R3)	0.15 per sq. ft. of roof coverage	Sq. Ft.	1895	
RF02 RF03	Roofing (Other Groups)	0.15 per sq. ft. for first 30,000 sq. ft. 0.10 per sq. ft. thereafter	Sq. Ft.		

REQUIRED INSPECTIONS
1. Before anchor sheet is covered**
2. Final

**-Always check with inspector for additional inspections.

CATEGORY 93- TILE ROOF (Nail-on Application)

Fee Code	Description	Fee Calculation	Unit	# of Units	Fee
RF01A	Roofing (Groups R2 & R3)	0.20 per sq. ft. of roof coverage	Sq. Ft.		
RF02A RF03A	Roofing (Other Groups)	0.20 per sq. ft. for first 30,000 sq. ft. 0.10 per sq. ft. thereafter	Sq. Ft.		

REQUIRED INSPECTIONS
1. Tin Cap
2. In-progress
3. Tile Installation
4. Final

*- Maintenance is charged by minimum permit fee or per valuation according to Building Department fee schedule as determined by processor.

CATEGORY 94- TILE ROOF (Mortar/Adhesive Set Application)

Fee Code	Description	Fee Calculation	Unit	# of Units	Fee
RF01A	Roofing (Groups R2 & R3)	0.20 per sq. ft. of roof coverage	Sq. Ft.	_____	_____
RF02A RF03A	Roofing (Other Groups)	0.20 per sq. ft. for first 30,000 sq. ft. 0.10 per sq. ft. thereafter	Sq. Ft.	_____	_____

REQUIRED INSPECTIONS

1. Tin Cap
2. In-progress
3. Tile Installation
4. Final

CATEGORY 95-SHINGLES (Asphalt, Fiberglass, SBS)

Fee Code	Description	Fee Calculation	Unit	# of Units	Fee
RF01	Roofing (Groups R2 & R3)	0.15 per sq. ft. of roof coverage	Sq. Ft.	_____	_____
RF02 RF03	Roofing (Other Groups)	0.15 per sq. ft. for first 30,000 sq. ft. 0.10 per sq. ft. thereafter	Sq. Ft.	_____	_____

REQUIRED INSPECTIONS

1. Tin Cap
2. Shingle in Progress
3. Final

CATEGORY 96- METAL ROOF (Standing Seams, Panels, Tiles, Etc.)

Fee Code	Description	Fee Calculation	Unit	# of Units	Fee
RF01A	Roofing (Groups R2 & R3)	0.20 per sq. ft. of roof coverage	Sq. Ft.	_____	_____
RF02A RF03A	Roofing (Other Groups)	0.20 per sq. ft. for first 30,000 sq. ft. 0.10 per sq. ft. thereafter	Sq. Ft.	_____	_____

REQUIRED INSPECTIONS

1. Tin Cap
2. Fire Barrier
3. In Progress
4. Final

Total Fee: ***$*** _____

WARNING

A) Chapter 455 of the Florida Statutes provides for fines in the amount of $500.00 to $5000.00 for any consumer (owner-builder, contractor, etc.), who "aids and abets the unlicensed practice of a professional by employing such unlicensed person."

B) A Product Control "Notice of Acceptance" and method of installation must be provided at time of permit application and posted at job site for inspection on all roofing system.

C) The Contractor or owner-builder must provide an O.S.H.A. APPROVED ladder for roof access at the time of inspection. Failure to do so will result in reinspection fee.

The city of bright opportunities

City of Opa-locka
Building & Licensing

OWNERS AFFIDAVIT OF EXEMPTION

ROOF-TO-WALL CONNECTION HURRICANE MITIGATION RETROFIT FOR EXISTING SITE-BUILT SINGLE FAMILY RESIDENTIAL STRUCTURES PURSUANT TO SECTION 553.844 F.S.

To: City of Opa-locka
Building Official
780 Fisherman St,
Opa-locka, FL

Re: Owners Name:
Property Address:
Roofing Permit Number

Dear Building Official:

I, MARTHA PAVON certify that I am not required to retrofit the roof-to-wall connections of my building because:

☐ The just valuation for the structure for purposes of ad valorem taxation is less than $300,00.00

☐ The building was constructed in compliance with the provisions of the Florida Building Code (FBC) or with the provisions of the 1994 edition of the South Florida Building Code (1994 SFBC)

Martha Pavon
Signature of Property Owner

MARTHA PAVON
Print Name

State of Florida County of Miami-Dade
Sworn to and subscribed before me this 16TH day of September, 24.

☐ Personally Known ☒ Produced Identification DL

Notary Signature

Seal

JOSSELIN CONTRERAS
Notary Public-State of Florida
Commission # HH 378887
My Commission Expires
April 18, 2027

When the just valuation of the structure of ad valorem taxation is equal to or more than $300,00.00, and the building was not constructed in compliance with the FBC nor with 1994 SFBC, an affidavit of Roof-to-Wall Connection Mitigation Retrofit must be provided.

The city of bright opportunities

City of Opa-locka
Building & Licensing

AFFIDAVIT OF COMPLIANCE
ROOF-TO-WALL CONNECTION

HURRICANE MITIGATION RETROFIT FOR EXISTING SITE-BUILT SINGLE FAMILY RESIDENTIAL STRUCTURES PURSUANT TO SECTION 553.844 F.S.

To: City of Opa-locka
Building Official
780 Fisherman St
Opa-locka, FL

Re: Owners Name
Property Address
Roofing Permit Number

Dear Building Official:

I Gordon Myers, certify that I have improved the roof-to-wall connections of the referenced property as required by the **"Manual of Hurricane Mitigation Retrofits for Existing Site-Built Single Family Residential Structures"** as adopted by the Florida Building Commission by Rule 9B-3.047 F.A.C

Signature of Qualifying Agent

Gordon Myers
Print Name

State of Florida County of Miami-Dade
Sworn to and subscribed before me this 16th day of September, 24.

☐ Personally Known ☒ Produced Identification DL

Notary Signature

Seal

JOSSELIN CONTRERAS
Notary Public-State of Florida
Commission # HH 378887
My Commission Expires
April 18, 2027

Section 1524

High Velocity Hurricane Zones-Required Owners Notification for Roofing Considerations

1524.1 Scope. As it pertains to this section, it is the responsibility of the roofing contractor to provide the owner with the required roofing permit, and to explain to the owner the content of this section. The provisions of Chapter 15 of the ***Florida Building Code, Building*** govern the minimum requirements and standards of the industry for roofing system installations. Additionally, the following items should be addressed as part of the agreement between the owner and the contractor. The owner's initial in the designated space indicates that the item has been explained.

MP 1. **Aesthetics-workmanship:** The workmanship provisions of Chapter 15 (High Velocity Hurricane Zone) are for the purpose of providing that the roofing system meets the wind resistance and water intrusion performance standards. Aesthetics (appearance) are not a consideration with respect to workmanship provisions. Aesthetic issues such as color or architectural appearance, that are not part of a zoning code, should be addressed as part of the agreement between the owner and the contractor.

MP 2. **Renailing wood decks:** When replacing roofing, the existing wood roof deck may have to be renailed in accordance with the current provisions of Chapter 16 (High Velocity Hurricane Zones) of the Florida Building Code. (The roof deck is usually concealed prior to removing the existing roof system).

MP 3. **Common roofs:** Common roofs are those which have no visible delineation between neighboring units (i.e. townhouses, condominiums, etc.). In buildings with common roofs, the roofing contractor and/or owner should notify the occupants of adjacent units of roofing work to be performed.

MP 4. **Exposed ceilings:** Exposed, open beam ceilings are where the underside of the roof decking can be viewed from below. The owner may wish to maintain the architectural appearance; therefore, roofing nail penetrations of the underside of the decking may not be acceptable. The owner provides the option of maintaining this appearance.

MP 5. **Ponding water:** The current roof system and/or deck of the building may not drain well and may cause water to pond (accumulate) in low-lying areas of the roof. Ponding can be an indication of structural distress and may require the review of a professional structural engineer. Ponding may shorten the life expectancy and performance of the new roofing system. Ponding conditions may not be evident until the original roofing system is removed. Ponding conditions should be corrected.

MP 6. **Overflow scuppers (wall outlets):** It is required that rainwater flow off so that the roof is not overloaded from a buildup of water. Perimeter/edge walls or other roof extensions may block this discharge if overflow scuppers (wall outlets) are not provided. It may be necessary to install overflow scuppers in accordance with the requirements of: Chapter 15 and 16 herein and the ***Florida Building Code, Plumbing.***

MP 7. **Ventilation:** Most roof structures should have some ability to vent natural airflow through the interior of the structural assembly (the building itself). The existing amount of attic ventilation shall not be reduced. **Exemption:** Attic spaces, designed by a Florida-licensed engineer or registered architect to eliminate the attic venting, venting shall not be required.

Property Address: 1141 JANN AVE OPA-LOCKA, FL 33054 Permit No.: _____

Owner's/Agent's Signature: MyAnthA Date: 09-16-24

Contractor's Signature: _____ Date: 09/16/24

Revised 1.26.15

City of Opa-locka
Building & Licensing

SHEATHING AFFIDAVIT
Certificate of Compliance

Job Address: 1141 JANN AVE OPA-LOCKA, FL 33054 **Permit No.:** _____

Name of Roofing Company: ROOFERS INTERNATIONAL

Name of Qualifier: GORDON MYERS **License No.:** CCC057265

Address: 1195 N MILITARY TRAIL #2B WEST PALM BEACH, FL 33409

I, Gordon Myers, do hereby affirm:
(Print Name of Qualifier)

That I have personally inspected the re-nailing of the existing roof sheathing as required by the Florida Building Code 2010 (FBC) Section 2322.2.8 for the area covered by the roofing permit referenced above and further state that the re-nailing of the sheathing meets the requirements of the current edition of the Florida Building Code Section 2322.2.

FBC Section 2322.2.2, board roof sheathing shall have a net thickness of not less than 3/4 inch when the span is not more than 28 inches or 5/8 inch when the span is not more than 24 inches, shall have staggered joints and shall be nailed with 8d common nails not less than two in each 6-inch board nor three in each 8 inch board at each support.

FBC Section 2322.2.8, When existing roofs are re-roofed to the point that the existing roofing is removed down to the sheathing, the existing roof sheathing shall be re-nailed with 8d common nails (0.131 diameter by 2 ½" long with a 0.281 diameter full round head). Power driven 8d nails shall be of the same dimensions. Nail spacing shall be six inches on center at panel edges, six inches on center at intermediate supports and where applicable 4 inches on center over gable ends and sub-fascia. Existing fasteners may be used to achieve such minimum spacing.

Qualifier's Signature _____ Date 09/16/24

Gordon Myers, having first been duly sworn, does affirm the above statement
(Print Name of Qualifier) to be true and correct by his own personal knowledge.

Notary Signature _____

JOSSELIN CONTRERAS
Notary Public-State of Florida
Commission # HH 378887
My Commission Expires
April 15, 2027
(Seal/Stamp)

Date 9-16-24

___ Personally known to me X Produced photo ID Type of ID DL

City of Opa-locka
Building& Licensing

ROOFING AFFIDAVIT

Certificate of Compliance

Job Address: 1141 JANN AVE OPA-LOCKA, FL 33054 **Permit No.:** _____

Name of Roofing Company: ROOFERS INTERNATIONAL

Name of Qualifier: GORDON MYERS **License No.:** CCC057265

Address: 1195 N MILITARY TRAIL #2B WEST PALM BEACH, FL 33409

I hereby certify to the City of Opa-locka, Building Department that all portions of the above-described roof improvements, covered and unseen by the Roofing Inspector during "in-progress" inspections, was constructed and/or installed in accordance with approved plans, specifications and Product Control Approval as per Florida Building Code.

Qualifier's Signature Date: 09/16/24

Gordon Myers, having first been duly sworn, does affirm the above statement
(Print Name of Qualifier) to be true and correct by his own personal knowledge.

Notary Signature (Seal/Stamp) 9-16-24 Date

___ Personally known to me ___X___ Produced photo ID Type of ID DL

JOSSELIN CONTRERAS
Notary Public-State of Florida
Commission # HH 378887
My Commission Expires
April 18, 2027

MIAMI-DADE COUNTY

BOARD OF RULES AND APPEALS

SIMPLIFIED ENERGY SYNOPSIS FORM

FOR THE GLAZING AND ROOFING PERMITS*

**This form shall be filled out and validated by the Plans Examiner reviewing energy; the form must then be made available to the Structural Plans Examiner and the Roofing Plans Examiner. This form must be included as part of the both the glazing permit package and the roofing permit package. The Building and Roofing Inspector shall utilize this form to confirm energy code compliance.*

Project or Owners Name:	MARTHA PAVON
Project Address:	1141 JANN AVE OPA-LOCKA, FL 33054
Process Number:	

Building Element**	U-Factor	R-Value	SHGC	Reflectance
Glazed Fenestration	N/A	N/A	N/A	N/A
Skylight	N/A	N/A	N/A	N/A
Above Deck Roof Insulation	N/A	N/A	N/A	N/A
Roof Reflectance	N/A	N/A	N/A	N/A

**** Mark NA for any information which is not applicable**

SECTION 1525
HIGH-VELOCITY HURRICANE ZONES – UNIFORM PERMIT APPLICATION

Florida Building Code 8th Edition (2023)
High-Velocity Hurricane Zone Uniform Permit Application Form

INSTRUCTION PAGE

COMPLETE THE NECESSARY SECTIONS OF THE UNIFORM ROOFING PERMIT APPLICATION FORM AND ATTACH THE REQUIRED DOCUMENTS AS NOTED BELOW:

Roof System	Required Sections of the Permit Application Form	Attachments Required See List Below
Low Slope Application	A, B, C	1, 2, 3, 4, 5, 6, 7
Prescriptive BUR-RAS 150	A, B, C	4, 5, 6, 7
Asphaltic Shingles	A, B, D	1, 2, 4, 5, 6, 7
Concrete or Clay Tile	A, B, D, E	1, 2, 3, 4, 5, 6, 7
Metal Roofs	A, B, D	1, 2, 3, 4, 5, 6, 7
Wood Shingles and Shakes	A, B, D	1, 2, 4, 5, 6, 7
Other	As Applicable	1, 2, 3, 4, 5, 6, 7

ATTACHMENTS REQUIRED:

1.	Fire Directory Listing Page
2.	From Product Approval: Front Page Specific System Description Specific System Limitations General Limitations Applicable Detail Drawings
3.	Design calculations per Chapter 16, or if applicable, RAS 127 or RAS 128
4.	Other Component Product Approval
5.	Municipal Permit Application
6.	Owner's Notification for Roofing Considerations (Reroofing Only)
7.	Any Required Roof Testing / Calculation Documentation

Section A (General Information)

Master Permit No._____ Process No. _____

Contractor's Name **ROOFERS INTERNATIONAL INC**

Job Address **1141 JANN AVE OPA-LOCKA, FL 33054**

ROOF CATEGORY

- [X] Low Slope
- [ ] Asphaltic Shingles
- [ ] Mechanically Fastened Tile
- [ ] Metal Panel/Shingles
- [ ] Prescriptive BUR-RAS 150
- [ ] Mortan/Adhesive Set Tiles
- [ ] Wood Shingles/Shakes

ROOF TYPE

- [ ] New Roof
- [ ] Repair
- [ ] Maintenance
- [X] Reroofing
- [ ] Recovering

ROOF SYSTEM INFORMATION

Low Slope Roof Area (SF) **1895** Steep Sloped Roof Area (SF)_____ Total (SF) **1895**

Section B (Roof Plan)

Sketch Roof Plan: Illustrate all levels and sections, roof drains, scuppers, overflow scuppers and overflow drains. Include dimensions of sections and levels, clearly identify dimensions of elevated pressure zones and location of parapets.

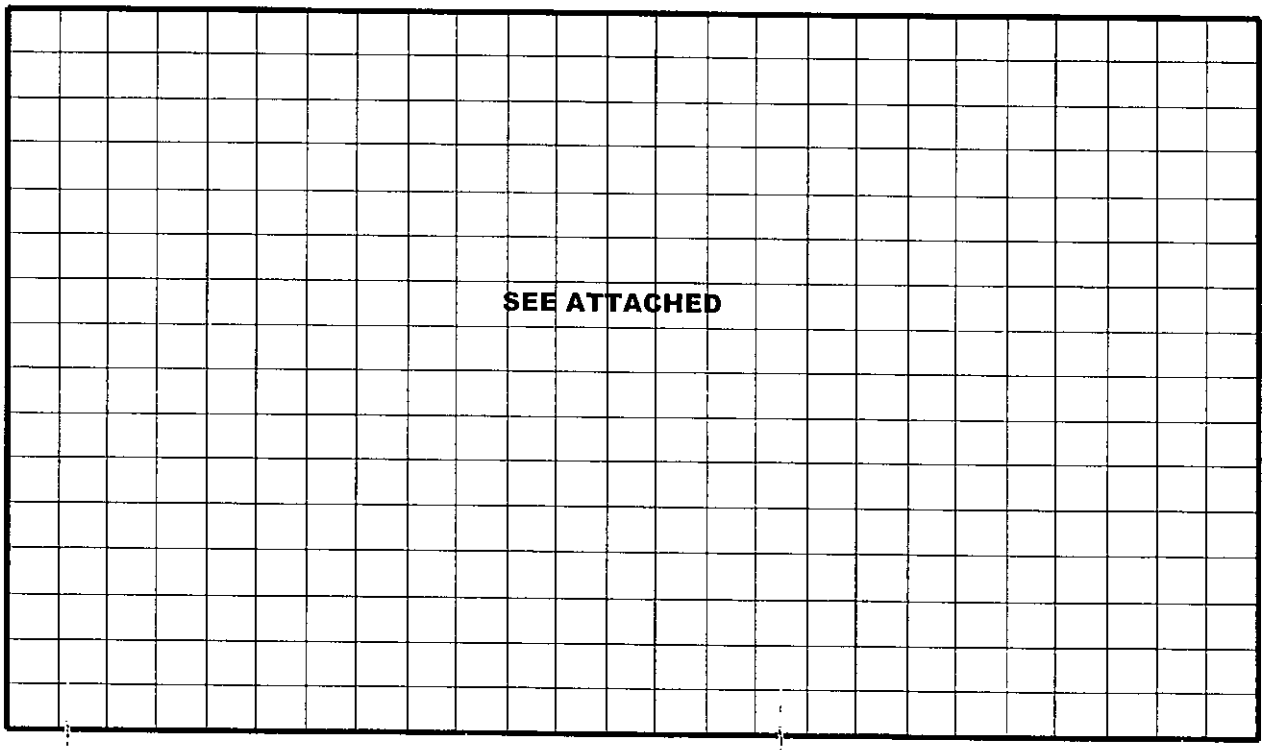

Roof Report

Prepared by Roofr

1141 Jann Avenue, Opa-locka, FL 33054

1895 sqft
3 facets
Predominant pitch 0/12

This report was prepared by Roofr. Copyright © 2024 Roofr.com | All rights reserved.

Diagram

1141 Jann Avenue, Opa-locka, FL 33054

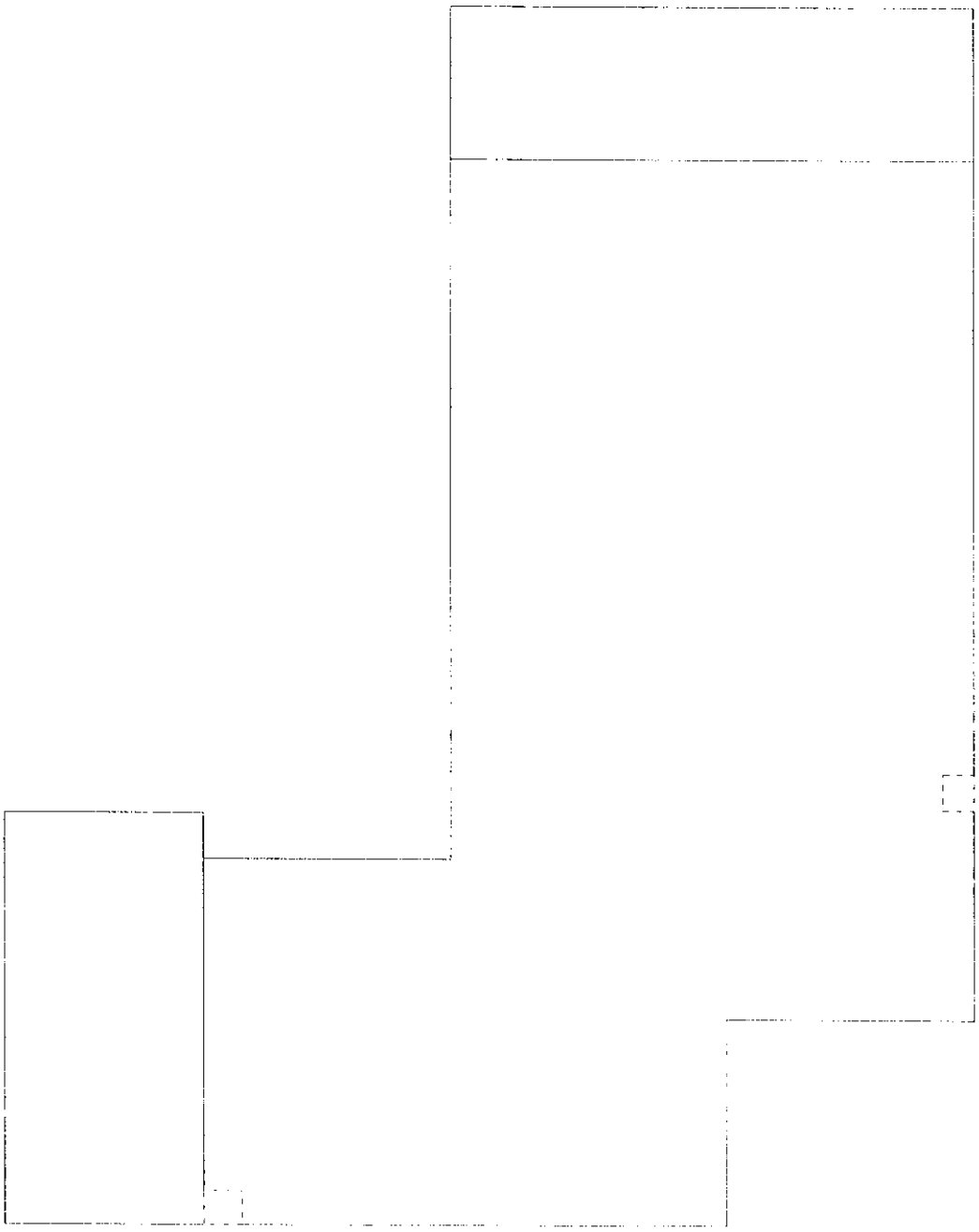

This report was prepared by Roofr. Copyright © 2024 Roofr.com | All rights reserved.

Length measurement report

1141 Jann Avenue, Opa-locka, FL 33054

- Eaves: 63ft 10in
- Ridges: 2ft 3in
- Step flashing: 0ft 0in
- Unspecified: 6ft 8in
- Valleys: 0ft 0in
- Rakes: 21ft 1in
- Transitions: 0ft 0in
- Hips: 0ft 0in
- Wall flashing: 52ft 0in
- Parapet wall: 175ft 3in

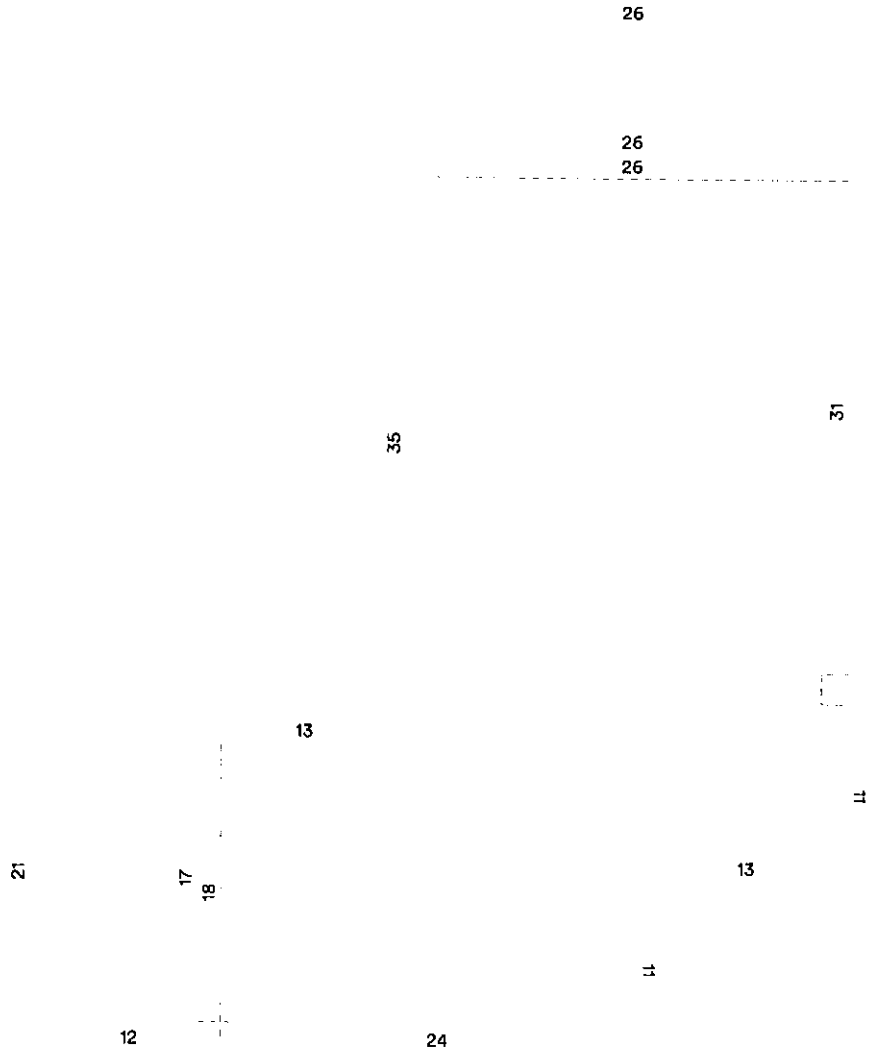

Measurements in diagram are rounded up for display. Some edge lengths may be hidden from diagram to avoid overcrowding.

This report was prepared by Roofr. Copyright © 2024 Roofr.com | All rights reserved.

Area measurement report

1141 Jann Avenue, Opa-locka, FL 33054

Total roof area: 1895 sqft
Pitched roof area: 223 sqft
Flat roof area: 1672 sqft
Two story area: 0 sqft
Two layer area: 0 sqft

Predominant pitch: 0/12
Predominant pitch area: 1672 sqft
Unspecified pitch area: 0 sqft

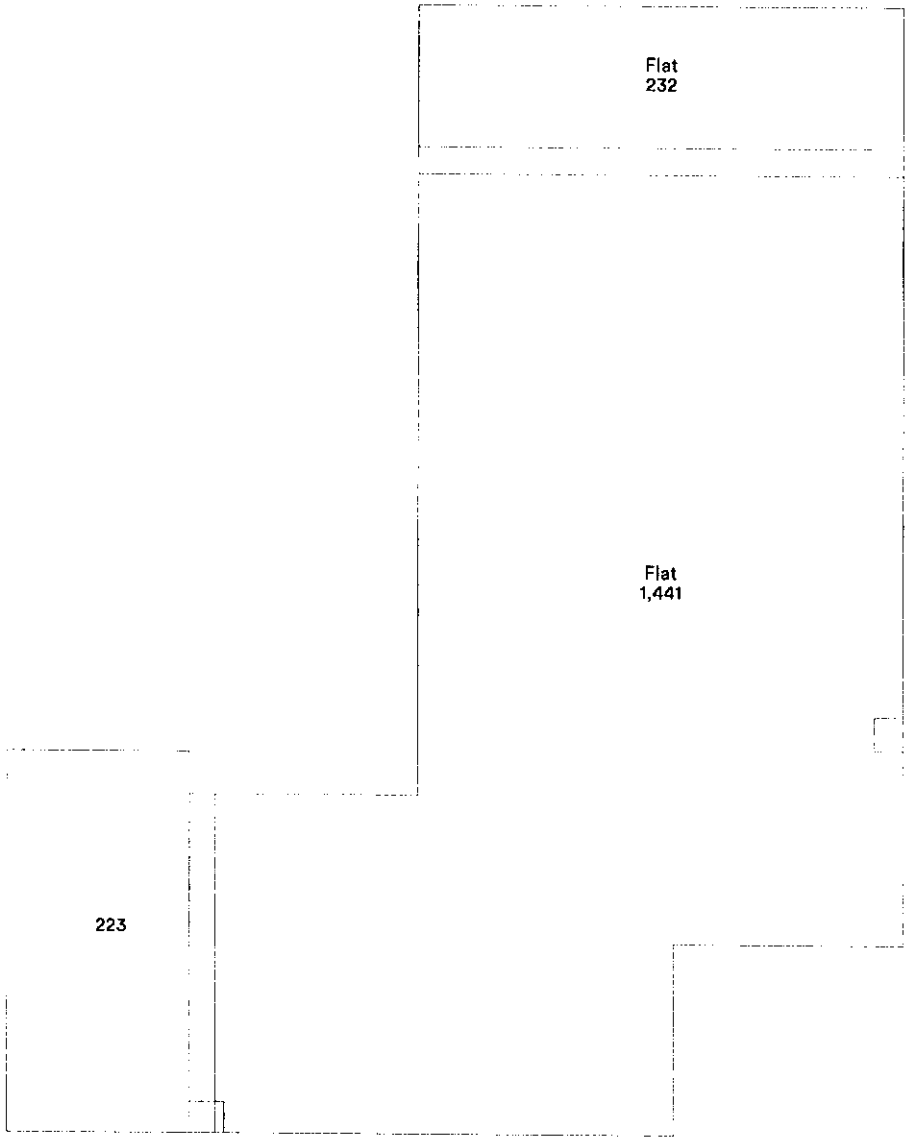

Area measurements in diagram are rounded. The totals at the top of the page are the sums of the exact measurements, which are then rounded. Deleted facets (skylights, chimneys, etc.) are designated with a dashed line and are excluded from the calculations.

This report was prepared by Roofr. Copyright © 2024 Roofr.com | All rights reserved.

Pitch & direction measurement report

1141 Jann Avenue, Opa-locka, FL 33054

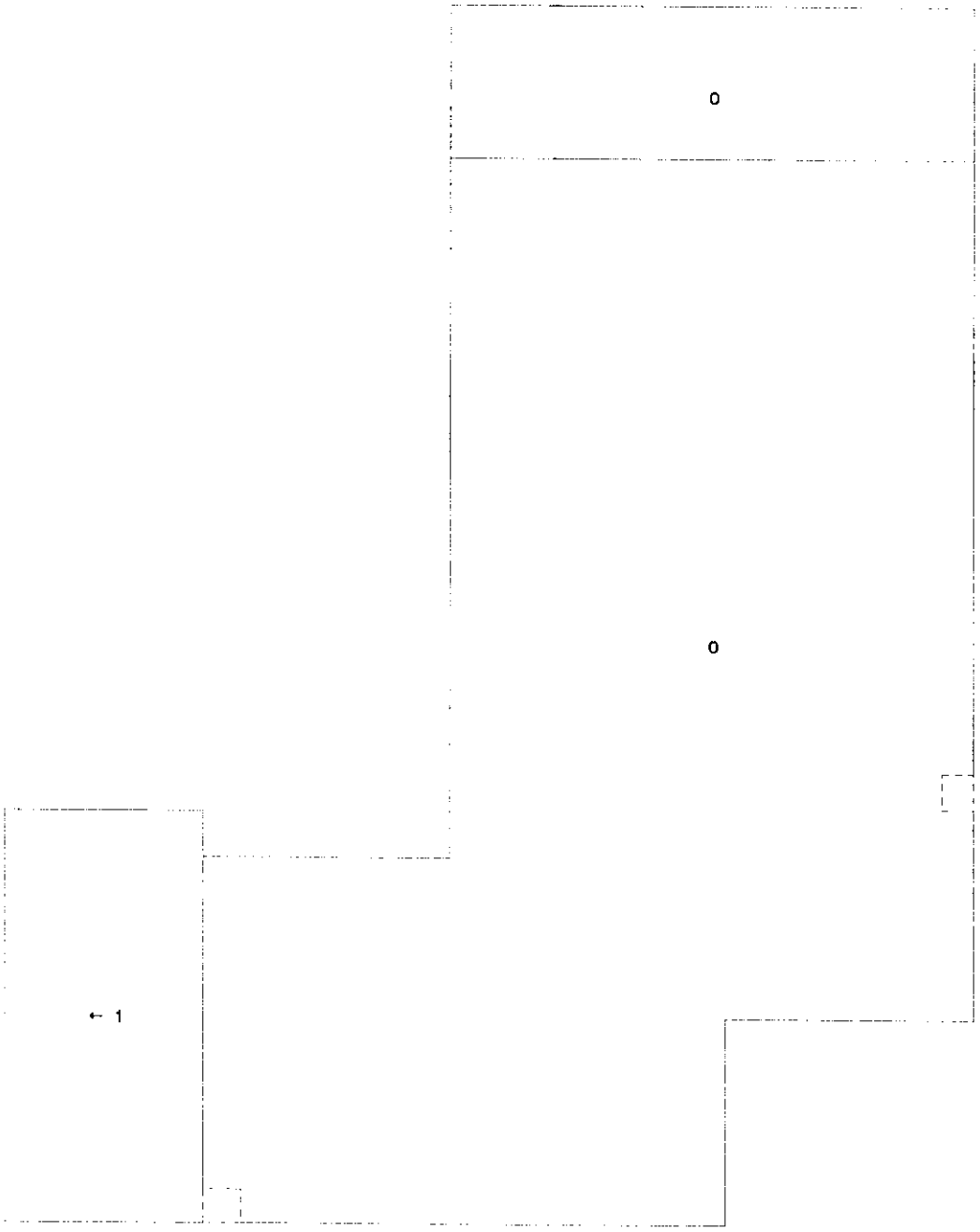

Deleted facets are designated with a dashed line and do not have a pitch.

This report was prepared by Roofr. Copyright © 2024 Roofr.com | All rights reserved.

Report summary

1141 Jann Avenue, Opa-locka, FL 33054

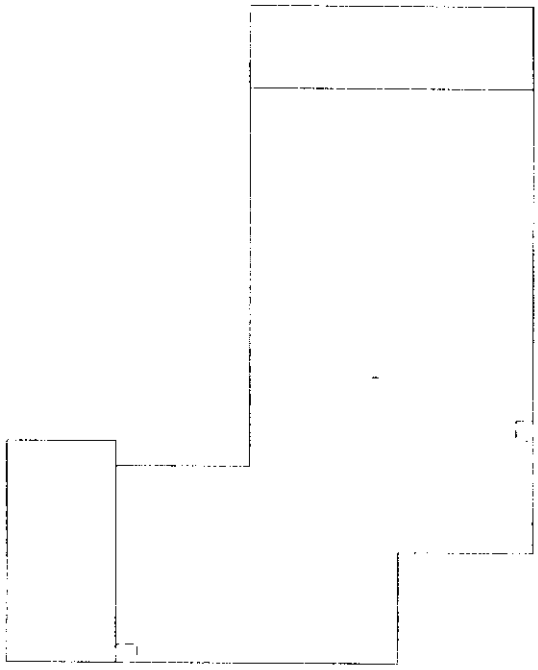

Measurements

Total roof area	1895 sqft
Total pitched area	223 sqft
Total flat area	1672 sqft
Total roof facets	3 facets
Predominant pitch	0/12
Total eaves	63ft 10in
Total valleys	0ft 0in
Total hips	0ft 0in
Total ridges	2ft 3in
Total rakes	21ft 1in
Total wall flashing	52ft 0in
Total step flashing	0ft 0in
Total transitions	0ft 0in
Total parapet wall	175ft 3in
Total unspecified	6ft 8in
Hips + ridges	2ft 3in
Eaves + rakes	84ft 10in

Pitch	0/12	1/12
Area (sqft)	1,673	223
Squares	16.8	2.3

Recommended

Waste %	0%	2%	10%	12%	15%	17%	20%
Area (sqft)	1,895	1,933	2,085	2,123	2,179	2,217	2,274
Squares	19.0	19.4	20.9	21.3	21.8	22.2	22.8

Recommended waste is based on an asphalt shingle roof with a closed valley system (if applicable). Several other factors are involved in determining which waste percentage to use, including the complexity of the roof and individual roof application style. You will also need to calculate the post-waste quantity of other materials needed (hip and ridge caps, starter shingle, etc.).

This report was prepared by Roofr. Copyright © 2024 Roofr.com | All rights reserved.

Section C (Low Sloped Roof Systems)

Fill in specific roof assembly components and identify manufacturer
(If a component is not used, identify as "NA")

System Manufacturer: **GAF RUBEROID**

Product Approval No.: **23-1102.03**

Design Wind Pressures, From RAS 128 or Calculations:

Zone 1': **-37** Zone 1: **-64** Zone 2: **-84** Zone 3: **-115**

Max. Design Pressure, from the specific product approval system: **52.5**

Deck:
Type: **5/8 PLYWOOD**

Gauge/Thickness: **0:12**

Slope: **N/A**

Anchor/Base Sheet & No. of Ply(s): **N/A**

Anchor/Base Sheet Fastener/Bonding Material: **N/A**

Insulation Base Layer: **N/A**

Base Insulation Size and Thickness: **N/A**

Base Insulation Fastener/Bonding Material: **N/A**

Top Insulation Layer: **N/A**

Top Insulation Size and Thickness: **N/A**

Top Insulation Fastener/Bonding Material: **N/A**

Base Sheet(s) & No. of Ply(s): **1 EA #75 BASE**

Base Sheet Fastener/Bonding Material: **1-1/4 RS NAILS W/ 1-5/8" TTN CAP 6" O.C. EDGE & 2 ROW 9" O.C. FIELD**

Ply Sheet(s) & No. of Ply(s): **1 EA RUBEROID 20**

Ply Sheet Fastener/Bonding Material: **HOT MOP**

Top Ply: **GAF GLASS CAP SHEET**

Top Ply Fastener/Bonding Material: **HOT MOP**

Surfacing: **HOT MOP**

Fastener Spacing for Anchor/Base Sheet Attachment:

Zone 1': **9** " oc @ Lap, # Rows **2** @ **9** " oc

Zone 1: **7** " oc @ Lap, # Rows **2** @ **7** " oc

Zone 2: **5** " oc @ Lap, # Rows **2** @ **5** " oc

Zone 3: **5** " oc @ Lap, # Rows **3** @ **5** " oc

Number of Fasteners Per Insulation Board:

Zone 1': _____ Zone 1:_____ Zone 2:_____ Zone 3:_____

Illustrate Components Noted and Details as Applicable: Woodblocking, Gutter, Edge Termination, Stripping, Flashing, Continuous Cleat, Cant Strip, Base Flashing, Counterflashing, Coping, Etc.

Indicate: Mean Roof Height, Parapet Height, Height of Base Flashing, Component Material, Material Thickness, Fastener Type, Fastener Spacing or Submit Manufacturers Details that Comply with RAS 111 and Chapter 16.

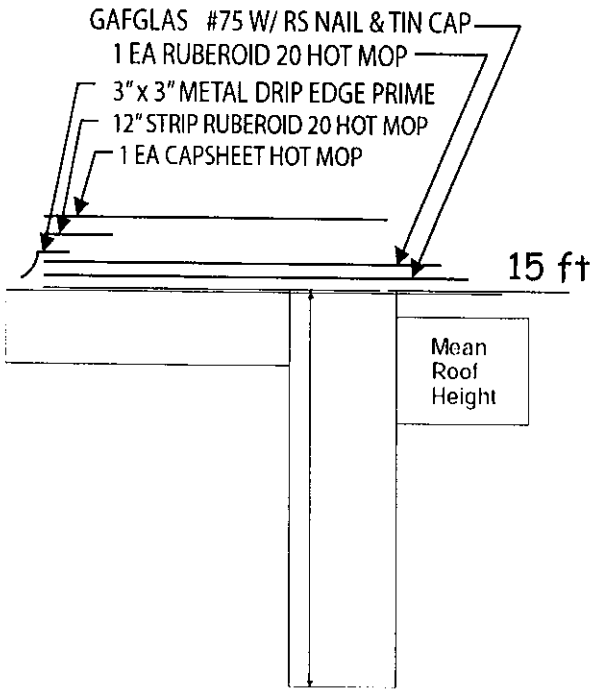

Sponsored by: City Manager

ORDINANCE NO. 2022-02

AN ORDINANCE OF THE CITY COMMISSION OF THE CITY OF OPA-LOCKA, FLORIDA AMENDING CHAPTER 2, ARTICLE XI, DIVISION 13 ENTITLED "HISTORIC ENVIRONMENTAL PRESERVATION BOARD" TO ESTABLISH MINIMUM STANDARDS FOR MUNICIPAL HISTORIC PRESERVATION PROGRAMS AS SET FORTH IN THE MIAMI-DADE COUNTY HISTORIC PRESERVATION ORDINANCE SECTION 16A-3.1; PROVIDING FOR BOARD ORGANIZATION AND QUALIFICATIONS; BOARD DUTIES AND RESPONSIBILITIES; SCOPE OF REGULATIONS; DEFINITIONS; ADMINISTRATION AND ENFORCEMENT RULES AND REGULATIONS; SITE/DISTRICT/ZONE DESIGNATION PROCESS AND PROCEDURES; DEMOLITION PROCESS AND PROCEDURES; PROCEDURES FOR MAINTENANCE OF DESIGNATED PROPERTIES; CERTIFICATE TO DIG PROCEDURES; AN APPEALS PROCESS; PENALTIES AND INCENTIVES; PROVIDING FOR SEVERABILITY; PROVIDING FOR CONFLICT AND REPEALER; RESCINDING ALL RESOLUTIONS IN CONFLICT; PROVIDING FOR AN EFFECTIVE DATE.

WHEREAS, pursuant to Ordinance 16-13, on October 12, 2016 the City of Opa-Locka, Florida ("City") established the Historic Environmental Preservation Board ("Board") in order to preserve and protect the City's historic and cultural heritage and foster civic pride; and

WHEREAS, the Historic Environmental Preservation Board was also established to protect the green environment within the City, especially, the preservation of its trees in order to support Arbor Day principles; and

WHEREAS, pursuant to Chapter 2, Article XI, Division 13, Sec. 2-570.81 and Sec. 2-570.82 of the City of Opa-Locka's Code of Ordinances, the City created, provided for composition; term of office; qualifications; organization; meetings, records standards and established duties and responsibilities of the Historic Environmental Preservation Board; and

WHEREAS, the City Commission desires to amend Chapter 2, Article XI, Division 13 entitled "Historic Environmental Preservation Board" to, among other things, establish minimum standards for municipal historic preservation programs as set forth in the applicable Miami-Dade County Historic Preservation Ordinance.

NOW, THEREFORE, BE IT ORDAINED BY THE CITY COMMISSION OF THE CITY OF OPA-LOCKA, FLORIDA AS FOLLOWS:

SECTION 1. The recitals to the preamble herein are incorporated by reference.

SECTION 2. The City Commissioner of the City of Opa-Locka, Florida hereby amends Chapter 2, Article XI, Division 13 entitled: "Historic Environmental Preservation Board" as follows:

Sec. 2-570.81. - Created; composition; term of office; qualifications; organization; meetings; records.

(a) A Historic Environmental Preservation Board ("Board") is hereby created, which shall be an advisory body to the commission, consisting of nine (9) members, each of whom shall be appointed by the city commission, for a term of ~~two (2) or~~ four (4) years. ~~for each member, except for the initial terms of the board upon its creation. The terms shall be staggered such that not fewer than two (2) nor more than three terms shall expire each year. The terms of board members shall commence on October 1 and shall expire on September 30.~~ Each member of the board shall serve until the expiration of his or her term. Members shall be eligible for reappointment. The City Commission of the City of Opa-Locka shall attempt to appoint architects, realtors, historians, art historians, lawyers, engineers, archaeologists or other individuals from the business, financial, or other segments of the community who, by virtue of their profession or business, have demonstrated concern for historic preservation. The Historic Environmental Preservation Board shall include not less than one architect; one real estate agent or attorney at law; and one historian or architectural historian. The City Manager shall provide qualified professional staff for the Board.

(b) At least five (5) members of the historic environmental board shall be residents of the City of Opa-locka, ~~and a registered voter of the City of Opa-locka,~~ Florida. ~~The city commission shall specifically designate these resident members.~~ The city commission, within its discretion, ~~shall~~ may appoint up to a maximum of four (4) members of the board who are not residents ~~or registered voters~~ of the City of Opa-locka, Florida. These four (4) appointments shall be made on the basis of civic pride, integrity, experience and interest in the field of historic preservation and city beautification. ~~Members of the historic environmental preservation board shall have diverse backgrounds, and whenever possible, prior experience in land use, planning, zoning, legal matters, landscape architecture, historic preservation or working knowledge of historic preservation principles and general working~~

~~knowledge of tree and plant identification and characteristics.~~ Members of the historic environmental preservation board shall hold no other public office or position in the City of Opa-locka.

(c) ~~An organizational meeting of the historic environmental preservation board shall be held to~~ The members of the Historic Environmental Preservation Board shall elect a chair and vice-chair from among its appointed members. The city commission ~~upon written charges and after public hearing~~ may remove members and vacancies shall be filled for the unexpired term of any removed member.

(d) ~~At least one (1) regular meeting of the board shall be held each month, as needed, but~~ Meetings of the Historic Environmental Preservation Board shall meet not less than six (6) times in any calendar year. ~~Regular meetings may be called by the Chair or staff for the board. The historic environmental preservation board shall keep record of its proceedings,~~ Records shall be maintained pursuant to Florida law, findings and determinations showing the vote on each matter and shall file the record and approved minutes of each meeting with the city clerk within thirty (30) days of the date of the meeting, or as soon thereafter as practicable. Members of the historic environmental board shall serve without compensation.

(e) The historic environmental preservation board may adopt reasonable rules of procedure to govern the conduct of its business and the holding of public hearings and workshops, consistent with procedures established for it by the city commission.

Sec. 2-570.82. - Duties and responsibilities.

The Historical Preservation Board shall have the following enumerated powers and duties:

1) Adopt or amend rules of procedure for its meetings.
2) Advise the City Commission as to designated individual sites, districts and archeological zones.
3) Recommend the issuance or denial of Certificates of Appropriateness and Certificates to Dig.

4) Recommend the approval of historical markers and recommend the issuance of certificates of recognition for individual sites and designated properties in a district.

5) Recommend zoning and building code amendments to the proper authorities.

6) Recommend to the City Commission guidelines for preservation and criteria for issuance by staff of regular certificates of appropriateness.

7) Promote the awareness of historic preservation and its community benefits.

8) No actions of this Board will supersede or be construed as superseding the authority of the City Commission.

9) Review and recommend update the Historic Survey as it applies to the City of Opa-locka and conduct such local research as is considered appropriate.

10) Implement the authority of this Ordinance and fulfill the tasks set forth for this Board by the City Commissioners.

11) Record and maintain records of the Board's actions and decisions.

12) Follow and abide by the laws of the United States of America, the State of Florida, Miami-Dade County, and the City of Opa-Locka.

13) Provide an annual report to the City Commission.

14) Make recommendations regarding planting and care of shade and ornamental trees and shrubbery now located or which may hereafter be planted in any public highway, park or pathway, except such as are excluded pursuant to applicable law, including the planting, trimming, spraying care and protection thereof.

(15) Make recommendations to regulate and control the use of the ground as may be necessary for proper growth, care and protection of trees and shrubbery.

(16) Recommend the removal of any tree or part thereof dangerous to public safety.

(17) Propose regulations, subject to approval by the city commission.

(18) Recommend the treatment or removal of any tree situated upon private property which is believed to harbor a disease or insects readily communicable to neighboring healthy trees in the care of the city.

19) Comply with all other minimum standards as set forth in Miami-Dade County Ordinance 81-13, Chapter 16-A pertaining to Historic Preservation.

Sec. 2-570.83. Scope of Regulations

This Ordinance is intended to and shall govern and be applicable to all property located in the City of Opa-locka, Florida. Nothing contained herein shall be deemed to supersede or conflict with applicable building and zoning codes. Provisions contained herein shall be cumulative and read in conjunction with other laws, rules and regulations. It is the legislative intent of the City of Opa-locka Commission that this Ordinance shall meet the requirements of Chapter 16A, Sec. 16A-3.1 of Miami-Dade County Code of Ordinances as a qualified municipal Historic Preservation Ordinance, and that this Ordinance shall be filed with the Clerk of Miami-Dade County Board of County Commissioners and with the National Register of Historical places for certification to be eligible under the relevant Tax Act.

Sec. 2-570.84. Definitions

(1) Archeological zone - An area designated by this ordinance which likely to yield information on the history and pre-history of Opa-locka based on prehistoric settlement patterns in Opa-locka as determined by the results of the Dade County Historic Survey and local research. These Zones will tend to conform to natural physiographic features which were the focal points for pre- historic and historic activities.

(2) Certificates of Appropriateness - A certificate issued by the City Commission after recommendation by the Board permitting certain alterations or improvements to a designated property.

(A) Regular Certificate of Appropriateness - A Regular Certificate of Appropriateness shall be issued by the staff of the Preservation Board, based on the guidelines for preservation approved by the City Commission.

(B) Special Certificate of Appropriateness - For all applications for a Special Certificate of Appropriateness involving the demolition, removal, reconstruction or new

construction at an individual site or in a district a Special Certificate of Appropriateness is required that is issued directly by the Board.

(3) Certificate to Dig - A certificate that gives the Board's permission for certain digging projects that may involve the discovery of as yet unknown or known archeological sites in an archeological zone. This certificate is issued by staff of the Board based on the guidelines for preservation approved by the Board.

(4) Certificate of Recognition - A certificate issued by the Board recognizing properties designated pursuant to this ordinance.

(5) City Commission – City of Opa-Locka Commission.

(6) Demolition - The complete constructive removal of a building of any site.

(7) Districts - A collection of archeological sites, buildings, structures, landscape features or other improvements that are concentrated in the same area and have been designated as a district pursuant to this ordinance.

(8) Exterior - All outside surfaces of a building or structure.

(9) Guidelines for Preservation - Criteria used by staff in determining the validity of applications for a Regular Certificate of Appropriateness and any Certificate to Dig and to establish a set of guide- lines for the preservation of buildings in Opa-locka. Minimum guidelines for preservation shall be that of the Secretary of Interior's Standards for the Treatment of Historic Properties, as may be amended from time to time. The City Commission may establish additional standards.

(10) Historical Preservation Board – The Board created and established by this ordinance as described in Section 2-570.81.

(11) Historic Survey - A comprehensive survey compiled by the Historic Preservation Division of the Miami-Dade County Office of Community and Economic Development involving the identification, research and documentation of buildings, sites and structures of any historical, cultural, archeological or architectural, importance in Miami-Dade County, Florida.

(12) Individual Site - An archeological site, building, structure, place or other improvement that has been designated as an individual site pursuant to this ordinance. Under the provisions of this ordinance interior spaces may be regulated only where a building or structure is designated individual site.

(13) National Register of Historic Places - A federal listing maintained by the U.S. Department of the Interior of buildings, sites, structures and districts that have attained a quality of significance as determined by the Historic Preservation Act of 1966 as amended.

(14) Ordinary Repairs or Maintenance - Work done to prevent deterioration of a building or structure or decay of or damage to a building or structure or any part thereof by re- storing the building or structure as nearly as practicable to its condition prior to such deterioration, decay or damage.

(15) Owner of a Designated Property - As reflected on the current Metropolitan Dade County tax rolls or current title holder.

(16) Qualified Staff may be considered outside contractors of the City and shall be a person who has a bachelor's degree in historic preservation, architecture, architectural history, history, or other closely related field, and who has at least 3 years of professional experience in the field of historic preservation or as a historic preservation planner; or who has a master's degree in the above mentioned fields and who has at least 1 year of professional experience in the field of historic preservation or as a historic preservation planner.

~~(17) Undue Economic Hardship - Failure to issue a certificate would place an onerous and excessive financial burden upon the owner that would amount to the taking of the owner's property without just compensation.~~

(17) Landscape Feature - Any improvement or vegetation including, but not limited to outbuildings, walls, courtyards, fences, shrubbery, trees sidewalks, planters, plantings, gates, street furniture and exterior lighting.

The definitions set forth in the Miami-Dade County Ordinance 81-13, Chapter 16-A pertaining to Historic Preservation shall by adopted and also apply to this section in the event of conflict and as may otherwise be amended from time to time.

Sec. 2-570.85. Historic Preservation Board: Created and Established

~~There is hereby created an Historical Preservation Board, ("the Board"), as a board of the City of Opa-locka, Florida.~~ The Board is hereby vested with the power, authority and jurisdiction to recommend the designation, regulation and administration of historical, cultural, archeological and architectural resources in Opa-locka, Florida, as prescribed by this Ordinance under the direct jurisdiction and legislative control of the Opa-locka City Commission.

Sec. 2-570.86. Rules and Regulations

The Board shall make and prescribe such rules and regulations as are reasonably necessary and appropriate for the proper administration and enforcement of the provisions of this Ordinance. Such rules and regulations shall conform to the provisions of this Ordinance and shall not conflict with the Constitution and general laws of the State of Florida, and shall govern and control procedures, hearings and actions of the board. No such rules and regulations shall become effective until a public hearing has been held upon the proposed rules and regulations, and any amendments or modifications thereto, and the same have been approved by the City Commission and filed with the City Clerk. Upon approval by the Commission, such rules and regulations shall have the force and effect of law within the City of Opa-locka, Florida. The City Commission shall prescribe forms for use by applicants in compliance with the provisions of this chapter.

Section 1. Designation Process and Procedure

I. The City Commission shall have the authority to designate areas, places, buildings, structures, landscape features, archeological sites and other improvements or physical features, as individual sites, districts, or archeological zones that are significant in Opa-locka's history, architecture, archeology, or culture and possesses an integrity of location, design, setting, materials, workmanship or association, or:

(A) Are associated with distinctive elements of the cultural, social political, economic, scientific, religious, prehistoric and architectural history that have contributed to the pattern of history in the community, Miami-Dade County, South Florida, the state or the nation; or

(B) Are associated with the lives of persons significant in our past; or

(C) Embody the distinctive characteristics of a type, period, style or method of construction or work of a master; or that possess high artistic value, or that represent a distinguishable entity whose components may lack individual distinction; or

(D) Have yielded, or are likely to yield information in history or prehistory; or

(E) Are listed in the National Register of Historic places. The City Commission shall conduct a separate public hearing to consider for designation each property within its jurisdiction listed in the National Register of Historic Places;

II. Certain properties which include cemeteries, birth- places, properties owned by religious institutions, or used for religious purposes, structures that have been moved from their original locations, properties commemorative in nature and properties that have achieved significance within the last twenty-five years, will not normally be considered for designation. However, such properties will qualify if they are integral parts of districts that do meet the criteria, or if they fall within the following categories:

(A) A religious property deriving primarysignificance from architectural or artistic distinction of historical importance.

(B) A building or structure removed from its location but which is primarily significant for architectural value,or is the surviving structure most importantly associated with an historic event or person.

(C) A birthplace or grave of an historicalfigure of outstanding importance if there is no other appropriate site or building directly associated with his/her productive life.

(D) A cemetery which derives its primary significance from graves of persons of transcendent importance, from age, distinctive design features, or from association with historic events.

(E) A property primarily commemorative in intent if design, age, tradition, or symbolic value has invested it with its own historical significance.

(F) A property or district achieving significance within the past twenty-five years if it is of exceptional importance.

III. Prior to the designation of an individual site, a district, or an archeological zone, an investigation and designation report must be filed with City. The format of these reports may vary according to the type of designation, however all reports must address the following: The historical, cultural, architectural,and archeological significance of the property of properties being recommended for designation; a recommendation of boundaries for districts and archeological zones and identification of boundaries of individual sites being designated; a recommendation of standards to be adopted by the City Commission in carrying out its regulatory function under this ordinance with respect to Certificates of Appropriateness and Certificates to Dig. Where a report is filed recommending designation of a district, the report must identify those properties, if any, within the district which are not historically or architecturally compatible with structures in the district. The standardsfor regulating such non-conforming properties shall provide that a Certificate of Appropriateness may be required only for new construction on such properties. All reports shall take into consideration projected, proposed or existing public improvements and developmental or renewal plans. The Board must produce at least one designation report per calendar year, and present it to the municipal historic preservation board for consideration, until all properties in its jurisdiction listed as historically significant on the municipality's or the County's previous surveys have been considered for designation.

IV. Procedure

(A) Petition of the Owner - The owner(s) of any property in the City of Opa-locka may petition the Board for recommendation of designation of their property as an individual site, district or archeological zone provided that they appearbefore the Board with sufficient information to warrant the investigation of the property for future designation and the Board finds that the property may be worthy of designation. The Miami-Dade County Historic Preservation Chief may also recommend the initiation of designations. The Board shall, based on its findings, either direct the staff to transfer its recommendation to the City Commission so that the City Commission can then direct City staff to begin the designation process or deny the petition.

(B) Directive of the Board - Upon recommendations from staff and the acceptance of petitions pursuant to this section, staff shall transmit the

Boards recommendations to the City Commission along with any other recommendations the Board may deem necessary, and submit its report to the City Commission.

(C) Notification of owner - For each proposed designation of an individual site, district, or archeological zonethe Board is encouraged to obtain the permission of the property owner(s) within the designated area, and is responsible for mailing a copy of the designation report to the owner(s) as notification of the intent of the Board to consider designation of the property at least 15 days prior to a public hearing held pursuant to this section.

(D) Notification of Government Agencies - Upon filing of a designation report, the Community Development Director shall immediately notify the Clerk of the Board of County Commissioners, the City Clerk, the City Building Official, the City Attorney and any other County or Municipal agency, including agencies with demolition powers, that may be affected by said filing.

(E) Notification of a Public Hearing – For each individual site, district or archeological zone proposed for designation a public hearing must be held as required by the Chapter 16A-3.1 of the Miami-Dade County Code of Ordinances.

(F) Requirement of Notification - The Board shall reduce to writing its recommendation to approve, deny, or amend the proposed designation and direct the Community Development Director to notify the City Commission following of its actions with a copy of the official minutes of the meeting, and a recommendation of the Board providing a summary statement of the effects of this action:

1) The City of Opa-locka Building Official,

2) The Opa-locka City Clerk,

3) Owner(s) of the affected property and other parties having an interest in the property, if known,

4) The Opa-locka Public WorksDepartment, and

5) Any other County or Municipal Agency, including agencies withdemolition powers, that may be affected by this action.

(G) Moratorium. Upon the filing of a designation report by the staff, the owner(s) of the real property which is the object matter of the designation report shall not:

1) Erect any structure on the subject property.

2) Alter, restore, renovate, move or demolish any structure on the subject property, until such time as final action, as provided by this chapter, is completed.

V. Demolition

A. Demolition of a designated building, structure, improvement or site may occur pursuant to an order of a government agency or a court of competent jurisdiction or pursuant to an application by the owner for a Special Certificate of Appropriateness.

B. Government agencies having the authority to demolish unsafe structures shall receive notice of designation of individual sites, districts or archeological zones pursuant to Section 10 of this Chapter. The City Commission shall be deemed an interested party and shall be entitled to receive notice of any public hearings conducted by said government agency regarding demolition of any designated property. The Board may make recommendations and suggestions to the City Commission and the owner(s) relative to the feasibility of and the public interest in preserving the designated property.

C. No permit for voluntary demolition of a designated building, structure, improvement or site shall be issued to the owner(s) thereof until an application for a Special Certificate of Appropriateness has been submitted and approved pursuant to the procedures in this Section. Refusal by the Board to grant a Special Certificate of Appropriateness shall be evidenced by written order detailing the public interest which is sought to be preserved. The Board shall be guided by the criteria contained in subsection V, D herein. The Board may grant a Special Certificate of Appropriate-ness which may provide for a delayed effective date of up to two (2) years. The effective date shall be determined by the Board based upon the relative significance of the structure and the prob-able time required to arrange a possible alternative to demolition. During the demolition delay period, the Board may take such steps as it deems necessary to preserve the structure concerned, in accordance with the purposes of this ordinance. Such steps may include, but shall not be limited to, consultation with civic groups public agencies and interested citizens, recommendations for acquisition of property by public or private bodies or agencies, and exploration of the possibility of moving one or more structures or other features.

D. In addition to all other provisions of this ordinance, the Board shall consider for recommendation to the City Commission the following criteria in evaluating applications for a Special Certificate of Appropriateness for demolition of designated properties:

(a) Is the structure of such interest or quality that it would reasonably meet national, state, or local criteria for designation as an historic or architectural landmark?

(b) Is the structure of such design, craftsmanship, or material that it could be reproduced only with great difficulty and/or expense?

(c) Is the structure one of the last remaining examples of its kind in the neighbor-hood, the County, or the region?

(d) Does the structure contribute significantly to the historic character of designated district?

(e) Would retention of the structure promote the general welfare of the County by providing an opportunity for study of local history, architecture, and design or by developing an understanding of the importance and value of a particular culture and heritage?

(f) Are there definite plans for reuse of the property if the proposed demolition is carried out, and what will be the effect of those plans on the character of the surrounding area?

VI. Where, by reason of particular site conditions and restraints, or because of unusual circumstances applicable solely to the particular applicant, strict enforcement of the provisions of this ordinance would result in serious undue economic hardship to the applicant, the matter shall be officially referred to the Opa-locka Zoning Board of Appeals which shall have the power to vary or modify adherence to this ordinance; provided always that its requirements ensure harmony with the general purposes hereof and will not adversely affect the City of Opa-locka, Dade County, nor the South Florida metropolitan region.

VII. No Building Permit shall be issued by the Opa-locka Building Official which affects any designated property in Dade County without a Certificate of Appropriateness.

VIII. All work performed pursuant to the issuance of any Certificate of Appropriateness shall conform to the requirements of the Certificate. The City Manager shall designate an appropriate official to assist the Board by making necessary inspections in connection with enforcement of this ordinance and shall be empowered to issue a stop work order if performance is not in accordance with the issued certificate. No work shall proceed as long as a stop work order continues in effect. Copies of inspection reports shall be furnished to the Board and copies of any stop work orders both to the Board and the applicant. The Building Official or appropriate official and staff for the Board shall be responsible for ensuring that any work not in accordance with an issued Certificate of Appropriateness shall be corrected to comply with the Certificate of Appropriateness prior to withdrawing the stop work order.

IX. For the purpose of remedying emergency conditions determined to be dangerous to life, health or property, nothing contained herein shall prevent the making of any temporary construction, reconstruction or other repairs to a

building or site in the City of Opa-locka, pursuant to an order of a government agency or a court of competent jurisdiction. The owner of a building damaged by fire or natural calamity shall be permitted to stabilize the building immediately without Board approval, and to rehabilitate it later under the normal review procedures of this ordinance.

X. The Board shall have the authority to review applications for Certificate of Appropriateness for all property in Opa-locka, however owned, by either private or public parties. The purposes of this ordinance shall apply equally to plans, projects or work executed or assisted by any private party, governmental body or agency, department, authority or board of the City, County or State.

XI. Demolition procedures and requirements shall otherwise comply with Chapter 16A-3.1 of the Miami-Dade County Code of Ordinances as may be amended from time to time.

Section 2. Maintenance of Designated Properties

Nothing in this ordinance shall be construed to prevent the ordinary maintenance or repair of any elements of any building or structure which does not involve a change of design, appearance or material, and which does not require a building permit.

Section 3. Certificates to Dig

I. Within an archeological zone, new construction, filling, digging, the removal of trees, or any other activity that may alter or reveal an interred archeological site shall be prohibited without a Certificate to Dig. All applications to all appropriate municipal or county agencies involving new construction, large scale digging, the removal of trees or any other activity that may reveal or disturb an interred archeological site, in an archeological zone shall require a Certificate to Dig before approval. Based on the designation report for the archeological zone, a complete application for a certificate to Dig and any additional guidelines the Board may deem necessary, the staff of the Board shall approve or deny the application for a Certificate to Dig by the owners of a property in a designated archeological zone. The Certificate to Dig may be made subject to specified conditions, including but not limited to, conditions regarding site excavation.

In order to comply with the site excavation requirements of the Certificate to Dig, the applicant may agree to permit a City or County sanctioned Archeologist to conduct excavation from the time of the approval of the Certificate to Dig until the effective date thereof. The findings of the staff shall be mailed to the applicant promptly. Applicant shall have the opportunity to challenge the staff decision or any conditions attached to the Certificate to Dig by requesting a meeting of the Board. The Board shall

convene within a reasonable time and shall make every effort to review and reconsider the original staff decision to arrive at an equitable decision. The decision of the Board shall be reduced to writing.

II. Approved Certificates to Dig - Approved Certificates to Dig shall contain an effective date at which time the proposed activity may begin, unless the Board decides to designate the site in question as an individual site or district pursuant to Section 10 of this ordinance in which case all the rules and regulations pertaining to the designation process shall apply from the date the designation report has been filed.

III. All work performed pursuant to the issuance of a Certificate to Dig shall conform to the requirements of such certificate. It shall be the duty of the City of Opa-locka, in particular its Public Works Department, to inspect from time to time any work pursuant to such certificate to assure compliance. In the event work is performed not in accordance with such certificate, the official designated by the City Manager pursuant to Section 1(VIII) shall be empowered to issue a stop work order and all work shall cease. No person, firm or corporation shall undertake any work on such projects as long as such stop work order shall continue in effect.

Section 4. Appeals

Upon written decision of the City Commission, an aggrieved party may appeal the decision by filing a written notice of appeal with the City Clerk. The notice of appeal shall state the decision which is being appealed, the grounds for the appeal, and a brief summary of the relief which is sought. Subsequently, the City Commission shall conduct a public hearing at which time they may affirm, modify or reverse the decision of the Board or of the City Commission. Nothing contained herein shall preclude the City Commission from seeking additional information prior to rendering a final decision. The decision of the City Commission shall be reflected in the minutes and a copy of the Minutes shall be forwarded to the board and the appealing party.

Within the time prescribed by the appropriate Florida Rules of Appellate Procedure, a party aggrieved by a decision of the City Commission may appeal an adverse decision to the Circuit Court in and for Dade County, Florida. The party taking the appeal shall be required to pay to the City of Opa-locka the sum of One Hundred Dollars ($100.00) to defray the costs of preparing the record on appeal.

Section 5. Penalties

Failure by an owner of record to comply with any provision of this ordinance shall constitute a violation hereof and shall be punishable by the City Commission by civil or criminal penalties including a fine of not more than $500.00 per day for each day the violation continues. In addition, the Board may require that any work

performed contrary to this ordinance must be removed and the property returned to its condition prior to commencement of said action.

Section 6. Incentives

All properties designated as individual sites or as designated properties within a district shall be eligible, upon application by the owner(s), for any available financial assistance set aside for historic preservation by Metropolitan Dade County contingent on the availability of funds and the scope of the project as described in the application.

SECTION 7. If any clause, section, or other part or application of this Resolution is held by any court of competent jurisdiction to be unconditional or invalid, in part or in application, it shall not affect the validity of the remaining portions or application of this Resolution.

SECTION 8. CONFLICT, ADDITIONS & REPEALER.

All ordinances, parts of ordinances or code provisions in conflict herewith ordinance are hereby repealed. To the extent of conflict between this Ordinance and Miami-Dade County Ordinance 81-13, Chapter 16-A pertaining to Historic Preservation, the Miami-Dade County Code of Ordinance shall control. Likewise, any provision not included herein, but specifically specified and required by Miami-Dade County Ordinance 81-13, Chapter 16-A pertaining to Historic Preservation in order to make the reading of this Ordinance complete, shall be interpreted as if the Miami-Dade Ordinance was incorporated herein.

SECTION 9. SEVERABILITY.

If any provision of this Ordinance or the application thereof to any person or circumstance is held invalid, such invalidity shall not affect other provisions of the Code or applications of this Ordinance that can be given effect without the invalid provision or application, and to this end the provisions of this Ordinance are declared to be severable.

SECTION 10. INCLUSION IN CODE.

It is the intention of the City Commission of the City of Opa-Locka that the provisions of this Ordinance shall at some time in the future become and be made a part of the Code of Ordinances of the City of Opa-Locka and that the sections of this Ordinance may be renumbered or re-lettered and the word "Ordinance" may be changed to "Chapter,"

"Section," "Article" or such other appropriate word or phrase, the use of which shall accomplish the intentions herein expressed; provided, however, that Section 1 hereof or the provisions contemplated thereby shall not be codified.

SECTION 11. EFFECTIVE DATE.

This Ordinance shall take effect upon the adoption of this Ordinance by the Commission of the City of Opa-Locka is subject to the approval of the Governor or Governor's Designee.

PASSED FIRST READING this 8th day of December 2021.

PASSED SECOND READING this 12th day of January 2022.

Veronica J. Williams, Mayor

ATTEST:

Joanna Flores, City Clerk

APPROVED AS TO FORM AND LEGAL SUFFICIENCY:

Burnadette Norris-Weeks, P.A.
City Attorney

Moved by: Commissioner Dominguez

Seconded by: Vice Mayor Taylor

VOTE:	**5-0**
Commissioner Bass	YES
Commissioner Davis	YES
Commissioner Dominguez	YES
Vice Mayor Taylor	YES
Mayor Williams	YES

CITY OF OPA-LOCKA, FLORIDA
NOTICE TO THE PUBLIC

NOTICE IS HEREBY GIVEN that the City Commission of the City of Opa-locka, Florida will hold public hearings at the Regular Commission Meeting on **Wednesday, January 12, 2022 at 7:00 p.m.,** at Sherbondy Village Auditorium, 215 Perviz Avenue, Opa-locka, Florida, to consider the following items for final adoption:

SECOND READING ORDINANCES/PUBLIC HEARING:

AN ORDINANCE OF THE CITY COMMISSION OF THE CITY OF OPA-LOCKA, FLORIDA, AMENDING THE ANNUAL ADOPTED GENERAL, PROPRIETARY AND SPECIAL REVENUE FUNDS BUDGETS FOR THE FISCAL YEAR COMMENCING OCTOBER 1, 2021 AND ENDING SEPTEMBER 30, 2022, ADJUSTING REVENUES AND EXPENDITURES AS REFLECTED IN EXHIBIT "A"; PROVIDING FOR THE EXPENDITURE OF FUNDS ESTABLISHED BY THE BUDGET; AUTHORIZING THE CITY MANAGER TO TAKE CERTAIN ACTIONS; PROVIDING FOR APPROPRIATION OF ALL BUDGETS AND EXPENDITURES; PROVIDING FOR FEES CONSISTENT WITH APPROPRIATIONS AND AMENDMENT; PROVIDING FOR INCORPORATION OF RECITALS; PROVIDING FOR CONFLICT AND REPEALER; PROVIDING FOR SEVERABILITY; PROVIDING FOR AN EFFECTIVE DATE (first reading / public hearing held on December 8, 2021).

AN ORDINANCE OF THE CITY COMMISSION OF THE CITY OF OPA-LOCKA, FLORIDA AMENDING CHAPTER 2, ARTICLE XI, DIVISION 13 OF THE CITY'S CODE OF ORDINANCES ENTITLED "HISTORIC ENVIRONMENTAL PRESERVATION BOARD" TO ESTABLISH MINIMUM STANDARDS FOR MUNICIPAL HISTORIC PRESERVATION PROGRAMS AS SET FORTH IN THE MIAMI-DADE COUNTY HISTORIC PRESERVATION ORDINANCE SECTION 16A-3.1; PROVIDING FOR BOARD ORGANIZATION AND QUALIFICATIONS; BOARD DUTIES AND RESPONSIBILITIES; SCOPE OF REGULATIONS; DEFINITIONS; ADMINISTRATION AND ENFORCEMENT RULES AND REGULATIONS; SITE/DISTRICT/ZONE DESIGNATION PROCESS AND PROCEDURES; DEMOLITION PROCESS AND PROCEDURES; PROCEDURES FOR MAINTENANCE OF DESIGNATED PROPERTIES; CERTIFICATE TO DIG PROCEDURES; AN APPEALS PROCESS; PENALTIES AND INCENTIVES; PROVIDING FOR SEVERABILITY; PROVIDING FOR CONFLICT AND REPEALER; RESCINDING ALL RESOLUTIONS IN CONFLICT; PROVIDING FOR AN EFFECTIVE DATE (first reading / public hearing held on December 8, 2021).

AN ORDINANCE OF THE CITY COMMISSION OF THE CITY OF OPA-LOCKA, FLORIDA, AUTHORIZING THE DISSOLUTION OF A SAFE NEIGHBORHOOD IMPROVEMENT DISTRICT (SPECIAL DISTRICT) IN ACCORDANCE WITH CHAPTER 189.071 FLORIDA STATUTES, AND REPEALING ORDINANCE 88-03 AND ORDINANCE 88-04, FOR THE ALI-BABA NEIGHBORHOOD IMPROVEMENT DISTRICT WITHIN AN AREA CONTAINING APPROXIMATELY 45 ACRES, BOUNDED ON THE EAST BY N.W. 17TH AVENUE, ON THE WEST BY N.W. 22ND AVENUE, ON THE NORTH BY N.W. 151ST STREET, AND ON THE SOUTH BY N.W. ALI BABA AVENUE; PROVIDING FOR CONFLICT AND REPEALER; PROVIDING FOR SEVERABILITY; PROVIDING FOR AN EFFECTIVE DATE (first reading / public hearing held on December 8, 2021).

AN ORDINANCE OF THE CITY COMMISSION OF THE CITY OF OPA-LOCKA, FLORIDA, AUTHORIZING THE DISSOLUTION OF A SAFE NEIGHBORHOOD IMPROVEMENT DISTRICT (SPECIAL DISTRICT) IN ACCORDANCE WITH CHAPTER 189.071 FLORIDA STATUTES, AND REPEALING ORDINANCE 88-03 AND ORDINANCE 88-11, FOR THE EAST-WEST SAFE NEIGHBORHOOD DISTRICT WITHIN AN AREA CONTAINING APPROXIMATELY 100 ACRES, BOUNDED ON THE EAST BY N.W. 17TH AVENUE, ON THE WEST BY N.W. 22ND AVENUE, ON THE NORTH BY N.W. 141ST STREET, AND ON THE SOUTH BY N.W. 135TH STREET; PROVIDING FOR CONFLICT AND REPEALER; PROVIDING FOR SEVERABILITY; PROVIDING FOR AN EFFECTIVE DATE (first reading / public hearing held on December 8, 2021).

AN ORDINANCE OF THE CITY COMMISSION OF THE CITY OF OPA-LOCKA, FLORIDA, AUTHORIZING THE DISSOLUTION OF A SAFE NEIGHBORHOOD IMPROVEMENT DISTRICT (SPECIAL DISTRICT) IN ACCORDANCE WITH CHAPTER 189.071 FLORIDA STATUTES, AND REPEALING ORDINANCE 88-03 AND ORDINANCE 88-05, FOR THE NILE GARDENS NEIGHBORHOOD IMPROVEMENT DISTRICT WITHIN AN AREA CONTAINING APPROXIMATELY 320 ACRES, BOUNDED ON THE EAST BY N.W. 27TH AVENUE, ON THE WEST BY ALEXANDRIA DRIVE, ON THE NORTH BY N.W. 135TH STREET, AND ON THE SOUTH BY N.W. 128TH STREET; PROVIDING FOR CONFLICT AND REPEALER; PROVIDING FOR SEVERABILITY; PROVIDING FOR AN EFFECTIVE DATE (first reading / public hearing held on December 8, 2021).

AN ORDINANCE OF THE CITY COMMISSION OF THE CITY OF OPA-LOCKA, FLORIDA, AMENDING ORDINANCE 15-31 LAND DEVELOPMENT REGULATIONS TO INCLUDE THE MOORISH REVIVAL STYLE DESIGN HANDBOOK; PROVIDING FOR DEFINITIONS, PERMIT AND SEVERABILITY; CODIFICATION; AND AN EFFECTIVE DATE (first reading / public hearing held on December 8, 2021).

AN ORDINANCE OF THE CITY COMMISSION OF THE CITY OF OPA-LOCKA, FLORIDA, AMENDING ORDINANCE 15-31 LAND DEVELOPMENT REGULATIONS TO INCLUDE ARTICLE IV, SECTION 22-101, CREATING THE HISTORIC DOWNTOWN OPA-LOCKA DISTRICT PROVIDING FOR DEFINITIONS, PROVIDING FOR PERMITTED AND PROHIBITED USES; PROVIDING FOR DEVELOPMENT CRITERIA; PROVIDING FOR SPECIAL PERMIT REQUIREMENTS; PROVIDING FOR CODIFICATION; PROVIDING FOR SEVERABILITY AND PROVIDING AN EFFECTIVE DATE (first reading / public hearing held on December 8, 2021).

AN ORDINANCE OF THE CITY COMMISSION OF THE CITY OF OPA-LOCKA, FLORIDA, AMENDING ORDINANCE 15-31 LAND DEVELOPMENT REGULATIONS TO INCLUDE ARTICLE IV, SECTION 22-102, CREATING THE OPA-LOCKA INNOVATION DISTRICT, PROVIDING FOR DEFINITIONS, PROVIDING FOR PERMITTED AND PROHIBITED USES, PROVIDING FOR DEVELOPMENT REGULATIONS AND INCENTIVES; PROVIDING FOR SEVERABILITY; PROVIDING FOR CODIFICATION; AND PROVIDING AN EFFECTIVE DATE (first reading / public hearing held on December 8, 2021).

RESOLUTIONS/PUBLIC HEARINGS:

A RESOLUTION OF THE CITY COMMISSION OF THE CITY OF OPA-LOCKA, FLORIDA APPROVING THE VARIANCE REQUEST FOR THE CONSTRUCTION AND OPERATION OF AN INDUSTRIAL WAREHOUSE / DISTRIBUTION & OFFICE SPACE DEVELOPMENT BUILDING LOCATED AT 12805 LE JEUNE ROAD AND IDENTIFIED BY FOLIO 08-2129-000-0061 IN THE I-3 ZONING DISTRICT; PROVIDING FOR INCORPORATION OF RECITALS; PROVIDING FOR AN EFFECTIVE DATE.

A RESOLUTION OF THE CITY COMMISSION OF THE CITY OF OPA-LOCKA, FLORIDA APPROVING THE FINAL SITE PLAN REVIEW REQUEST FOR THE CONSTRUCTION AND OPERATION OF AN INDUSTRIAL WAREHOUSE / DISTRIBUTION & OFFICE SPACE DEVELOPMENT BUILDING LOCATED AT 12805 LE JEUNE ROAD AND IDENTIFIED BY FOLIO 08-2129-000-0061 IN THE I-3 ZONING DISTRICT; PROVIDING FOR INCORPORATION OF RECITALS; PROVIDING FOR AN EFFECTIVE DATE.

A RESOLUTION OF THE CITY COMMISSION OF THE CITY OF OPA-LOCKA, FLORIDA APPROVING THE DEVELOPMENT AGREEMENT REVIEW FOR THE CONSTRUCTION AND OPERATION OF AN INDUSTRIAL WAREHOUSE / DISTRIBUTION & OFFICE SPACE DEVELOPMENT BUILDING LOCATED AT 12805 LE JEUNE ROAD AND IDENTIFIED BY FOLIO 08-2129-000-0061 IN THE I-3 ZONING DISTRICT; PROVIDING FOR INCORPORATION OF RECITALS; PROVIDING FOR AN EFFECTIVE DATE.

All interested persons are encouraged to participate and will be heard with respect to the public hearings.

Additional information on the above item may be obtained by contacting the Office of the City Clerk by telephone 305-953-2800 or email jflores@opalockafl.gov. To participate or provide comments virtually, please register on the City of Opa-locka website at www.opalockafl.gov no later than 7:00 p.m. on Wednesday, January 12, 2022.

In accordance with the Americans with Disabilities Act of 1990, persons needing special accommodations to participate in the proceeding should contact the Office of the City Clerk at (305) 953-2800 for assistance not later than five (5) days prior to the proceeding. If hearing impaired, you may telephone the Florida Relay Service at (800) 955-8771 (TTY), (800) 955-8770 (Voice), (877) 955-8773 (Spanish) or (877) 955-8707 (Creole).

PURSUANT TO FS 286.0105: *Anyone who desires to appeal any decision made by any board, agency, or commission with respect to any matter considered at such meeting or hearing will need a record of the proceedings, and for that reason, may need to ensure that a verbatim record of the proceedings is made, which record includes the testimony and evidence upon which the appeal may be based.*

Joanna Flores, CMC
City Clerk
City of Opa-locka

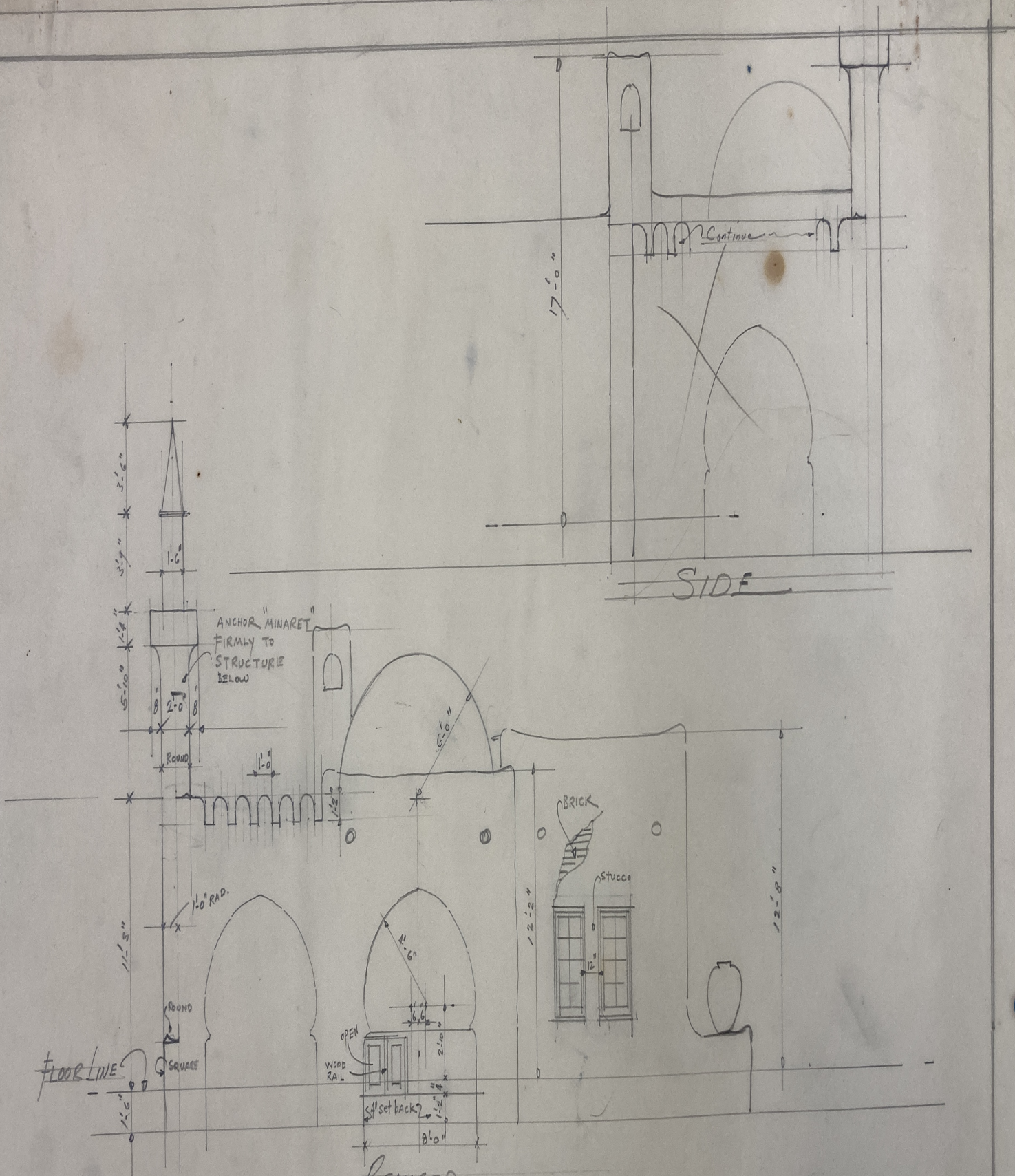

REVISED

FRONT ELEVATION

SCALE 1/4" = 1'-0"

RESIDENCE for
MR. S. K. HAISLIP
LOT 17 BLOCK 22
OPA-LOCKA, FLA.

S.E. MULLER Arch't OPA-LOCKA	JOB	DRAW
By C.J.V. Sept 13-26	22	1-A

CERTIFICATE OF APPROPRIATENESS

HISTORIC AND ENVIRONMENTAL PRESERVATION BOARD
HEPB COA APPLICATION-CITY OF OPA-LOCKA
PLANNING AND COMMUNITY DEVELOPMENT DEPARTMENT
780 FISHERMAN STREET, OPA-LOCKA, FL 33054

DATE RECEIVED

APPLICATION #_____

HEPB MEETING DATE_11-21-24__

RESOLUTION #_____

STAFF INITIALS _____

- ☐ APPROVED
- ☐ W. CONDITIONS
- ☐ DENIED
- ☐ CONTINUED TO: _____

HEPB APPLICATION

- ☒ SPECIAL COA
- ☐ SPECIAL CERTIFICATE TO DIG
- ☐ SPECIAL CERTIFICATE OF APPROVAL
- ☐ WAIVER

1141 JANN AVENUE, OPA-LOCKA, FL
PROPERTY ADDRESS **HISTORIC PROPERTY NAME**

MARTHA PAVON
OWNERS NAME

1141 JANN AVENUE, FL 33054
OWNER'S ADDRESS, CITY, STATE, ZIP CODE

561.632.8342
OWNER'S DAYTIME PHONE NUMBER

ROOFERS INTERNATIONAL – JOSSELIN CONTRERAS (CONTRACTOR)
APPLICANT /AUTHORIZED REPRESENTATIVE (NAME & TITLE)

1195 N MILITARY TRAIL #2B, WEST PALM BEACH, FL 33409
APPLICANT'S ADDRESS, CITY, STATE, ZIP CODE

APPLICANT'S DAYTIME PHONE NUMBER **APPLICANT'S EMAIL**

APPLICATION TYPE (CHOOSE AS MANY AS APPLICABLE)

- ☐ NEW CONSTRUCTION
- ☐ ADDITION
- ☐ DEMOLITION
- ☐ AFTER-THE FACT WORK
- ☐ ALTERATION
- ☐ LANDSCAPING/PAVING
- ☐ CONCEPTUAL
- ☒ OTHER-RE-ROOF
- ☐ PARKING WAIVER
- ☐ SETBACK VAIVER
- ☐ WAIVER (OTHER)

INCOMPLETE APPLICATIONS WILL NOT BE ACCEPTED.

The property owner should be present at the HEPB hearing. It is preferred that the owner personally present the project to the HEPB at the meeting. If the owner should choose to have a paid representative present the project on their behalf, that representative must be a registered lobbyist with the City of Opa-locka. For more information on becoming a registered lobbyist, please call the City Clerk's Office at 305.688.4611. (Lobbyist will be asked to provide proof of registration.)

OWNERS ATTESTATION:

I HAVE READ AND UNDERSTAND THE ABOVE INFORMATION AND I CERTIFY TO THE BEST OF MY ABILITY THAT ALL INFORMATION PROVIDED IN THIS APPLICATION AND ATTACHMENTS ARE CORRECT.

SIGNATURE OF PROPERTY OWNER **DATE**

11-15-24

SIGNATURE OF APPLICANT (IF OTHER THAN PROPERTY OWNER DATE

NOTE: A COMPLETE CHECKLIST AND INSTRUCTIONS FOR REQUIRED ATTACHMENTS ARE ON THE REVERSE SIDE. INCOMPLETE APPLICATIONS WILL NOT BE ACCEPTED

Sponsored by: Interim City Manager

A RESOLUTION OF THE CITY COMMISSION OF THE CITY OF OPA-LOCKA, FLORIDA, APPROVING THE RECOMMENDATION OF THE HISTORIC ENVIRONMENTAL PRESERVATION BOARD TO ISSUE A CERTIFICATE OF APPROPRIATENESS FOR THE STRUCTURE AT 1301 SHARAR AVENUE FOR THE REPLACEMENT OF TEN WINDOWS AND TWO DOORS OF THIS REGISTERED HISTORIC PROPERTY; PROVIDING FOR AN EFFECTIVE DATE.

WHEREAS, pursuant to Ordinance 16-13, the City of Opa-Locka, Florida ("City"), has established a Historic Preservation Ordinance and established the Historic Environmental Tree Preservation Board in order to preserve and protect the City's historic and cultural heritage and to foster civic pride; and

WHEREAS, the Historic Environmental Preservation Board was also established to protect the green environment in the City, especially through the preservation of trees in order to support Arbor Day principles; and

WHEREAS, as required by Miami-Dade County in order to maintain a separate, independent Historic Preservation Ordinance, the City practices a fully functional process and has adopted Ordinance 2022-02 to establish minimum standards for municipal historic preservation programs, as set forth in the Miami-Dade County Historic Preservation Ordinance Section 16A-3.1; and

WHEREAS, the Historic Preservation Ordinance permits issuance of a Special Certificate of Appropriateness for a building permit to allow for the replacement of ten windows and two doors on the registered historic property at 1301 Sharar Avenue, within the City, after an approval recommendation by the Historic Environmental Preservation Board, and review and approval by the City Commission in accordance with Ordinance 2022-02; and

WHEREAS, on November 21, 2024, the Historic Environmental Preservation Board held a meeting to, among other business matters, consider a request for a certificate of appropriateness approval for the structure at 1301 Sharar Avenue, within the City, to allow for the replacement of ten windows and two doors of this historic property. After presentation and discussion, the Historic Environmental Preservation Board recommended approval of the Certificate of Appropriateness by 4-0 vote; and

WHEREAS, the City Commission finds it in the best interest of the City and residents to issue a Special Certificate of Appropriateness for the structure at 1301 Sharar Avenue, within the City, as provided herein.

NOW, THEREFORE, BE IT RESOLVED BY THE CITY COMMISSION OF THE CITY OF OPA-LOCKA, FLORIDA AS FOLLOWS:

Section 1. The recitals to the preamble herein are incorporated by reference.

Section 2. The City Commission hereby accepts the recommendation of the Historic Environmental Preservation Board to issue a Special Certificate of Appropriateness for the structure at 1301 Sharar Avenue, within the City, to allow for the replacement of ten windows and two doors on the registered historic property.

Section 3. Sections of this Resolution may be renumbered or re-lettered and corrections of typographical errors which do not affect the intent may be authorized by the City Manager, following review by the City Attorney and without need of public hearing, by filing a corrected copy of same with the City.

Section 4. All ordinances or resolutions or parts of ordinances or resolutions in conflict herewith. Are hereby repealed.

PASSED and **ADOPTED** this _____ day of _____, 2024.

_____

John Taylor, Mayor

ATTEST:

_____

Joanna Flores, City Clerk

APPROVED AS TO FORM
AND LEGAL SUFFICIENCY:

_____
Burnadette Norris-Weeks, P.A.
City Attorney

Moved by: _____

Seconded by: _____

VOTE:

Commissioner Bass	_____
Commissioner Santiago	_____
Commissioner Ervin	_____
Vice Mayor Kelley	_____
Mayor Taylor	_____

City of Opa-locka
Agenda Cover Memo

Department Director:	Gregory D. Gay			**Department Director Signature:**		
Interim City Manager:	Shamecca Lawson			**ICM Signature**		
Commission Meeting Date:	12.11.2024		**Item Type:** *(Enter X in box)*	**Resolution**	**Ordinance**	**Other**
				X		
Fiscal Impact: *(Enter X in box)*	**Yes**	**No**	**Resolution Reading:** *(Enter X in box)*		**1st Reading**	**2nd Reading**
					X	
		X	**Public Hearing:** *(Enter X in box)*		**Yes** / **No**	**Yes** / **No**
					X	X
Funding Source: *Account#:*	*(Enter Fund & Dept)* Ex: N/A See Financial Impact section below		**Advertising Requirement:** *(Enter X in box)*		**Yes**	**No**
					X	
ILA Required: *(Enter X in box)*	**Yes**	**No**	**RFP/RFQ/Bid#:**			
	X					
Strategic Plan Related *(Enter X in box)*	**Yes**	**No**	**Strategic Plan Priority Area:** **Enhance Organizational** ☐ **Bus. & Economic Dev** ■ **Public Safety** ☐ **Quality of Education** ☐ **Qual. of Life & City Image** ■ **Communication** ☐		**Strategic Plan Obj./Strategy:** *(list the specific objective/strategy this item will address)*	
	X					
Sponsor Name	Interim City Manager		**Department:** Planning & Community Development		City Manager	

Short Title:

A RESOLUTION OF THE CITY COMMISSION OF THE CITY OF OPA-LOCKA, FLORIDA, APPROVING THE RECOMMENDATION OF THE HISTORIC ENVIRONMENTAL PRESERVATON BOARD TO ISSUE A CERTIFICATE OF APPROPRIATENESS FOR THE STRUCTURE AT 1301 SHARAR AVENUE FOR THE REPLACEMENT OF TEN WINDOWS AND TWO DOORS OF THIS REGISTERED HISTORIC PROPERTY; PROVIDING FOR AN EFFECTIVE DATE.

Staff Summary:

The City has adopted Ordinance 22-02 to establish minimum standards for municipal historic preservation programs and in agreement with Miami-Dade County Historic Preservation Ordinance Section 16A-3.1. The Historic Environmental Preservation Board per Ordinance 22-02, Section 2-570.84 (2) (B) Special Certificate of appropriateness: "For all applications for a special certificate of appropriateness involving the demolition, removal, reconstruction or new construction at an individual site or in a district, a special certificate of appropriateness is required that is issued by recommendation of the Historic Environmental Preservation Board" and review and approval by the City Commission. The Historic Environmental Preservation Board held a meeting on

November 21, 2024, to discuss current projects and to consider a request for a certificate of appropriateness approval for the structure at 1301 Sharar Avenue for the replacement of ten windows and two doors on this registered historic property. After presentation and discussion, the Historic Environmental Preservation Board recommended approval of the Certificate of Appropriateness by 4-0 vote.

BACKGROUND:

The City of Opa-locka established the Opa-locka Historic Preservation Board by Ordinance 81-13 for the purpose of protecting and perpetuating properties worthy of historic preservation. The City adopted Resolution 91-01 and Ordinance 91-02 to identify the properties in the City that were deemed outstanding examples of Moorish architecture, that were built based on the original plans as designed by its founder, Glenn Curtiss and to establish a list of properties that meet the requirements for being of historical, cultural, architectural and archeological significance. The City Commission has determined that it is in the best interests and welfare of the City of Opa-locka and its residents to enact an ordinance that establishes a board that performs the functions of both the Historic Preservation Board and the Environmental Tree Board. The City established the ahistoric Environmental Preservation Board pursuant to Ordinance 16-13 on October 12, 2016 in order to preserve and protect the City's historic and cultural heritage and foster civic pride. The Historic Environmental Preservation Board was also established to protect the green environment within the City, especially, the preservation of its trees in order to support Arbor Day principles. The Historic Environmental Preservation Board held a meeting on January 28, 2021 to introduce new board members, establish Board Chair and Vice-Chair, and to make improvements to the HEPB. Pursuant to Planning & community Development Department Director & Staff meeting with Miami Dade County Historic Preservation Chief, we received notice that independent municipal historic preservation programs were required to adopt the minimum standards as provided by Miami-Dade County regulations, Chapter 16A-3.1. The City Historic Environmental Preservation Legislation, Chapter 2 Article XI, Division 13, Sec 2-570.81 and Sec. 2-570.82 of the City Code of Ordinances concerning the composition, term of office, qualifications, organization, meeting, records standards and established duties and responsibilities of the HEPB.

Financial Impact

The City will receive permit fees associated with ensuring the preservation of this building.

Proposed Action:

PCD Staff recommends approval of this Resolution.

Attachment:

Draft Resolution
Ordinance 22-02 HEPB Minimum Standards
HEPB Application for Certificate of Appropriateness – 1301 Sharar Avenue
Building Plans to conduct full roof replacement.

CERTIFICATE OF APPROPRIATENESS

HISTORIC AND ENVIRONMENTAL PRESERVATION BOARD
HEPB COA APPLICATION-CITY OF OPA-LOCKA
PLANNING AND COMMUNITY DEVELOPMENT DEPARTMENT
780 FISHERMAN STREET, OPA-LOCKA, FL 33054

DATE RECEIVED

APPLICATION #_____

HEPB MEETING DATE_11-21-24__

RESOLUTION #_____

STAFF INITIALS _____

- ☐ APPROVED
- ☐ W. CONDITIONS
- ☐ DENIED
- ☐ CONTINUED TO: _____

HEPB APPLICATION

- ☒ SPECIAL COA
- ☐ SPECIAL CERTIFICATE TO DIG
- ☐ SPECIAL CERTIFICATE OF APPROVAL
- ☐ WAIVER

1301 SHARAR AVENUE, OPA-LOCKA, FL

PROPERTY ADDRESS **HISTORIC PROPERTY NAME**

PM2 CONSTRUCTION, LLC

OWNERS NAME

6505 SW 131 ST, MIAMI, FL 33146

OWNER'S ADDRESS, CITY, STATE, ZIP CODE

786.304.5035

OWNER'S DAYTIME PHONE NUMBER

TIMUTI CONSTRUCTION – CONTRACTOR

APPLICANT /AUTHORIZED REPRESENTATIVE (NAME & TITLE)

11042 NW 18 AVENUE, PLANTATION, FL 33322

APPLICANT'S ADDRESS, CITY, STATE, ZIP CODE

APPLICANT'S DAYTIME PHONE NUMBER **APPLICANT'S EMAIL**

APPLICATION TYPE (CHOOSE AS MANY AS APPLICABLE)

- ☐ NEW CONSTRUCTION
- ☐ ADDITION
- ☐ DEMOLITION
- ☐ AFTER-THE FACT WORK
- ☐ ALTERATION
- ☐ LANDSCAPING/PAVING
- ☐ CONCEPTUAL
- ☒ OTHER WINDOWS & DOOR
- ☐ PARKING WAIVER
- ☐ SETBACK VAIVER
- ☐ WAIVER (OTHER)

INCOMPLETE APPLICATIONS WILL NOT BE ACCEPTED.

The property owner should be present at the HEPB hearing. It is preferred that the owner personally present the project to the HEPB at the meeting. If the owner should choose to have a paid representative present the project on their behalf, that representative must be a registered lobbyist with the City of Opa-locka. For more information on becoming a registered lobbyist, please call the City Clerk's Office at 305.688.4611. (Lobbyist will be asked to provide proof of registration.)

OWNERS ATTESTATION:

I HAVE READ AND UNDERSTAND THE ABOVE INFORMATION AND I CERTIFY TO THE BEST OF MY ABILITY THAT ALL INFORMATION PROVIDED IN THIS APPLICATION AND ATTACHMENTS ARE CORRECT.

SIGNATURE OF PROPERTY OWNER **DATE**

11-15-24

SIGNATURE OF APPLICANT (IF OTHER THAN PROPERTY OWNER DATE

NOTE: A COMPLETE CHECKLIST AND INSTRUCTIONS FOR REQUIRED ATTACHMENTS ARE ON THE REVERSE SIDE. INCOMPLETE APPLICATIONS WILL NOT BE ACCEPTED

MASONITE.

WOOD-EDGE STEEL DOOR UNIT
6'-8" DOUBLE DOOR WITH / WITHOUT SIDELITES

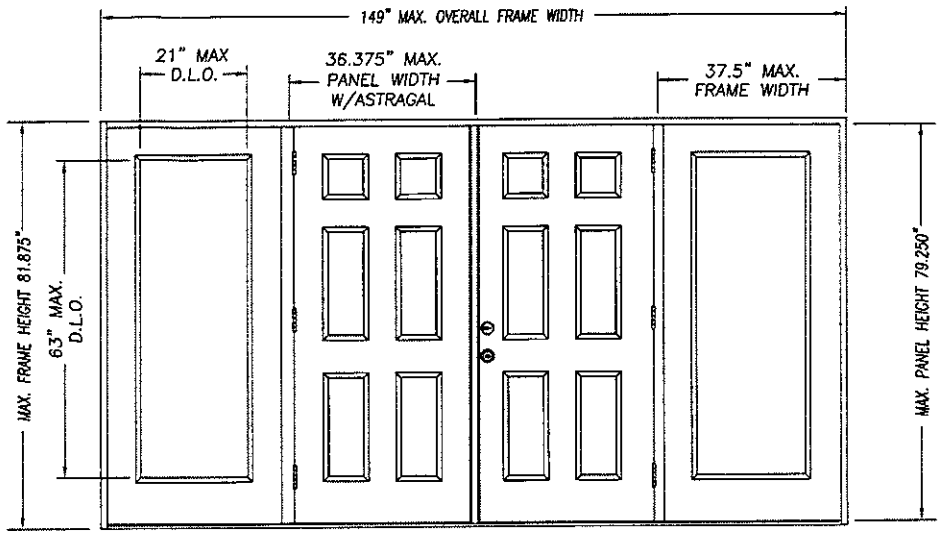

DOUBLE DOOR UNIT W/SIDELITES

GENERAL NOTES

1. EVALUATED FOR USE IN LOCATIONS ADHERING TO THE FLORIDA BUILDING CODE AND WHERE PRESSURE REQUIREMENTS AS DETERMINED BY ASCE 7, MINIMUM DESIGN LOADS FOR BUILDINGS AND OTHER STRUCTURES, DOES NOT EXCEED THE DESIGN PRESSURES LISTED.
2. WHEN INSTALLED IN THE WIND-BORNE DEBRIS REGION OR THE HIGH VELOCITY HURRICANE ZONE (HVHZ), HURRICANE PROTECTIVE SYSTEM IS NOT REQUIRED ON OPAQUE PANELS, BUT IS REQUIRED ON SIDELITES.
3. POLYURETHANE CORE FLAME SPREAD INDEX OF 50 AND SMOKE DEVELOPED INDEX OF 60 PER ASTM E84.
4. PLASTICS TESTING:

TEST DESCRIPTION	DESIGNATION	LITE FRAME
SELF IGNITION TEMP	ASTM D1929	740 °F > 650 °F
RATE OF BURNING	ASTM D635	0.77 IN/MIN
SMOKE DENSITY	ASTM D2843	13.4%
TENSILE STRENGTH*	ASTM D638	7.1% DIFF

* COMPARATIVE TENSILE STRENGTH AFTER WEATHERING 4500 HOURS XENON ARC METHOD 1

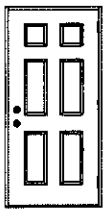

SINGLE DOOR UNIT

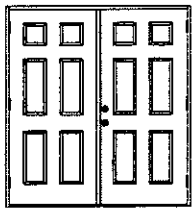

DOUBLE DOOR UNIT

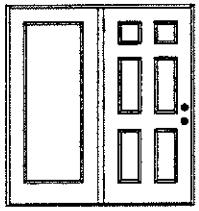

SINGLE DOOR UNIT WITH SIDELITE

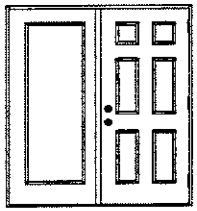

SINGLE DOOR UNIT WITH SIDELITE

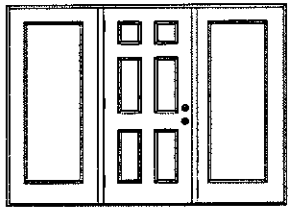

SINGLE DOOR UNIT W/SIDELITES

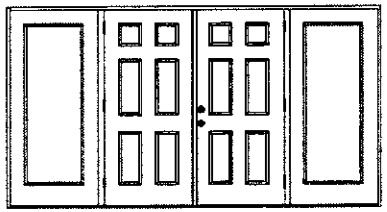

DOUBLE DOOR UNIT W/SIDELITES

CONFIG	MAX WIDTH	DESIGN PRESSURE RATING (1:1 OVERHANG OR WHERE NO WATER REQUIRED) INSWING	DESIGN PRESSURE RATING (1:1 OVERHANG OR WHERE NO WATER REQUIRED) OUTSWING	WHERE WATER INFILTRATION PERFORMANCE IS REQUIRED TO BE 15% OF DESIGN PRESSURE BUMPER O/S	Z-SERIES O/S	HIGH DAM O/S	T4 O/S	HP BUMP O/S
X	37.5"	+70.0 / -70.0	+70.0 / -70.0	+20.0 / -20.0	+30.0 / -30.0	+50.0 / -50.0	+50.0 / -50.0	+50.0 / -50.0
XX	74"	+55.0 / -55.0	+55.0 / -55.0	+20.0 / -20.0	+30.0 / -30.0	+50.0 / -50.0	N/A	N/A
OX or XO	75"	+55.0 / -55.0	+55.0 / -55.0	+20.0 / -20.0	+30.0 / -30.0	+50.0 / -50.0	N/A	N/A
OXO	112.5"	+55.0 / -55.0	+55.0 / -55.0	+20.0 / -20.0	+30.0 / -30.0	+50.0 / -50.0	N/A	N/A
OXXO	149"	+55.0 / -55.0	+55.0 / -55.0	+20.0 / -20.0	+30.0 / -30.0	+50.0 / -50.0	N/A	N/A

TABLE OF CONTENTS

SHEET #	DESCRIPTION
1	TYPICAL ELEVATIONS & GENERAL NOTES
2	ANCHORING LOCATIONS & DETAILS
3	ANCHORING LOCATIONS & DETAILS

LICENSE (2-1-23) NO. 56533 KURT L. BALTHAZOR STATE OF FLORIDA ENGINEER

KURT BALTHAZOR
FLORIDA P.E.
#56533

MASONITE INTERNATIONAL CORP.
1955 POWIS ROAD
WEST CHICAGO, IL 60185

PRODUCT: "EXTERIOR DOOR PRODUCT" DOUBLE 6'8" OPAQUE WOOD-EDGE STEEL DOOR

PART OR ASSEMBLY: TYPICAL ELEVATIONS & GENERAL NOTES

REVISIONS

NO.	DATE		BY
B	7/18/20	MISC. EDITS	SWS
A	4/6/18	ADDED THRESHOLDS	SWS

DATE: 5/26/17
SCALE: N.T.S.
DWG. BY: SWS
CHK. BY:
DRAWING NO.: DWG-MA-FL0211-17
SHEET 1 OF 3

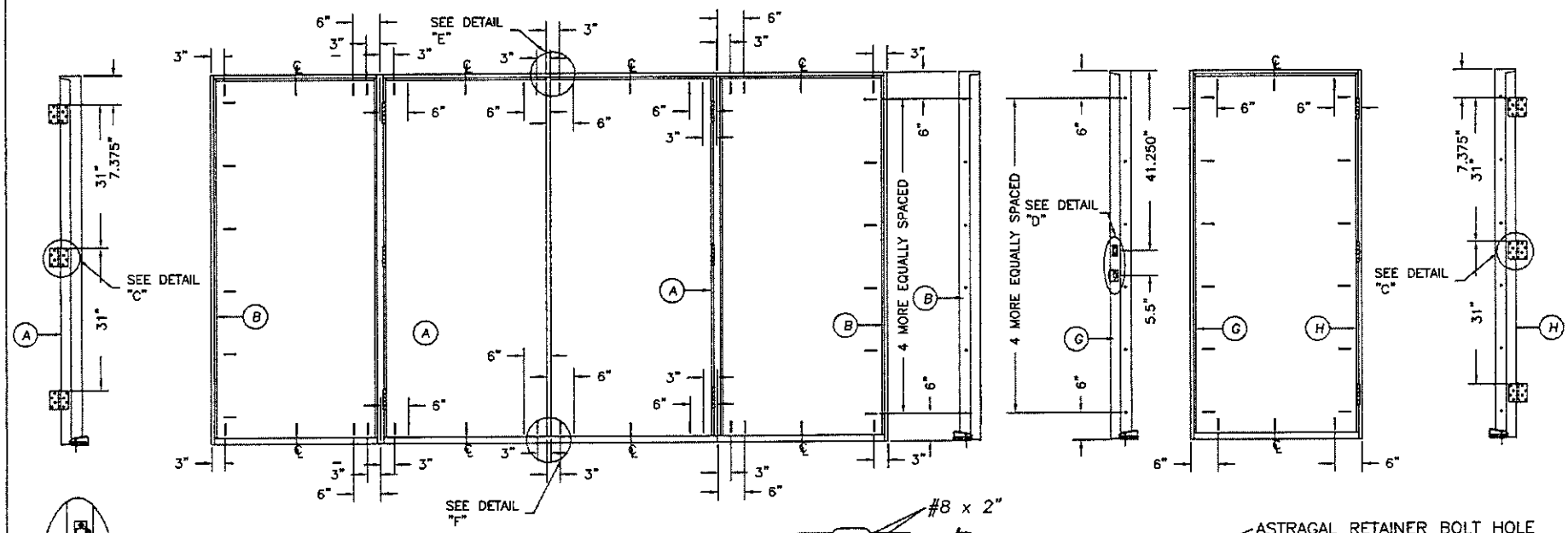

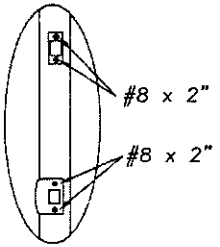

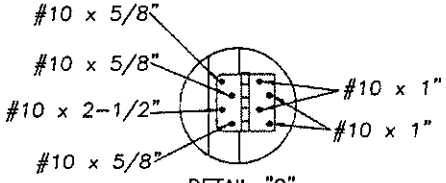

DETAIL "C"

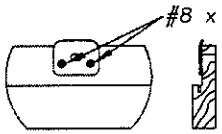

DETAIL "E" ASTRAGAL

ATTACH ASTRAGAL RETAINER BOLT STRIKE PLATE TO FRAME AS SHOWN.

ASTRAGAL RETAINER BOLT HOLE MUST BE DRILLED THROUGH THE THRESHOLD & INTO THE STRUCTURE DEEP ENOUGH FOR A 1.375" THROW

DETAIL "F" ASTRAGAL

DETAIL "D"

INSWING THRESHOLD

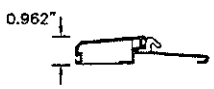

BUMPER O/S THRESHOLD

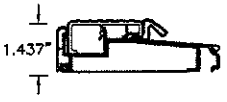

T4 O/S THRESHOLD

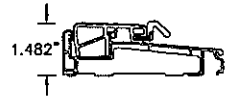

Z-SERIES O/S THRESHOLD

HIGH DAM O/S THRESHOLD

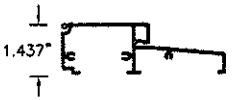

HP O/S THRESHOLD

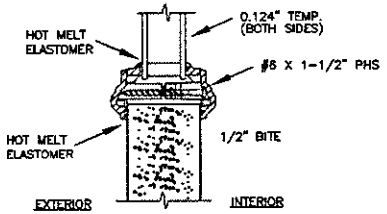

TYPICAL GLAZING DETAIL
NON-IMPACT GLASS

MAX GLASS SIZES COMPLY WITH ASTM E1300 FOR DESIGN PRESSURES LISTED ON PAGE 1

MASONITE INTERNATIONAL CORP.
1955 POWIS ROAD
WEST CHICAGO, IL 60185

PRODUCT: "EXTERIOR DOOR PRODUCT" 6'-8" WOOD-EDGE STEEL OPAQUE DOUBLE DOOR UNIT

PART OR ASSEMBLY: ANCHORING LOCATIONS & DETAILS

NO.	DATE	REVISIONS	BY
B	7/18/20	MISC EDITS	SWS
A	4/6/18	ADDED THRESHOLDS	SWS

DATE: 5/26/17
SCALE: N.T.S.
DWG. BY: SWS
CHK. BY:
DRAWING NO.: DWG-MA-FLO211-17
SHEET 2 OF 3

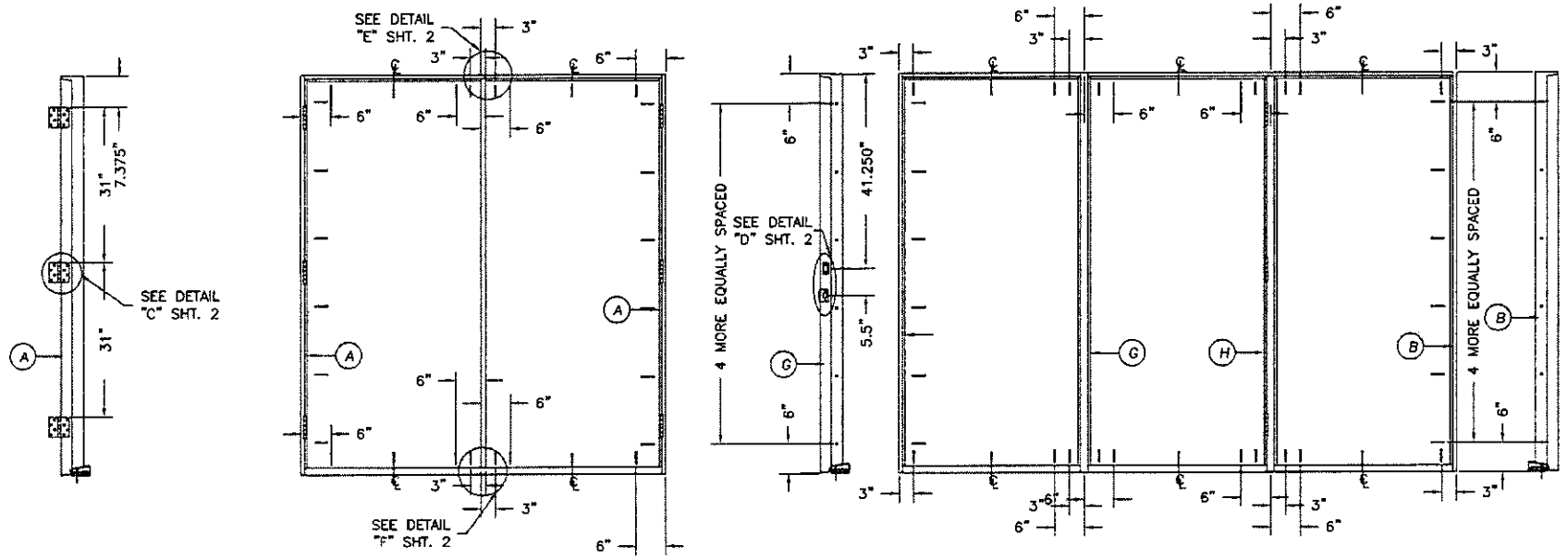

HARDWARE SCHEDULE

1.	KWIKSET SERIES 400 GRADE 3 CYLINDRICAL LATCH AND SERIES 980 GRADE 1 DEADLOCK HARDWARE TO BE INSTALLED AT 5-1/2" CENTERLINE.
2.	4" X 4" FULL MORTISE BUTT HINGES.

ATTACHMENT DETAIL

1. ANCHOR ANALYSIS FOR LOADING CONDITIONS PREPARED, SIGNED AND SEALED BY ROBERTO LOMAS, PE (FLORIDA #62514) WITH THE LOWEST (LEAST) FASTENER RATING FROM THE DIFFERENT FASTENERS BEING CONSIDERED FOR USE. JAMB, HEAD, AND THRESHOLD FASTENERS ANALYZED FOR THIS UNIT INCLUDE #10 WOOD SCREWS OR 1/4" TAPCONS. A PHYSICAL SHIM MUST BE PLACED IN SHIM SPACE AT EACH ANCHOR LOCATION. TAPCON EDGE DISTANCE MIN 2-1/2". WOOD SCREW EDGE DISTANCE MIN 3/4".
2. THE WOOD SCREW SINGLE SHEAR DESIGN VALUES COME FROM ANSI/AF&PA NDA FOR SOUTHERN PINE LUMBER AND ACHEIVEMENT OF 1-1/2" MINIMUM EMBEDMENT. THE TAPCON MUST ACHIEVE MINIMUM EMBEDMENT OF 1-1/4".
3. WOOD BUCKS BY OTHERS MUST BE ANCHORED PROPERLY TO TRANSFER LOADS TO STRUCTURE.
4. MINIMUM DESIGN VALUE STRENGTH OF ANCHORS 155 LBS.

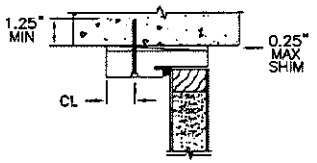

TYPICAL MASONRY ANCHOR INSTALLATION

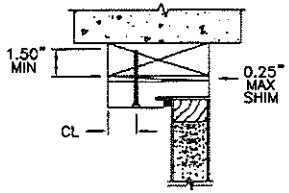

TYPICAL WOOD BUCK ANCHOR INSTALLATION

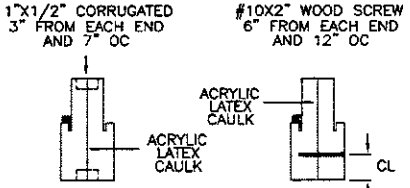

COMBINATION WOOD MULLION (BOXED)

COMBINATION WOOD MULLION (BOXED)

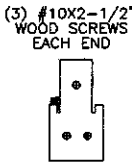

INTEGRAL WOOD MULLION (CHS)

MASONITE INTERNATIONAL CORP.
1955 POWIS ROAD
WEST CHICAGO, IL 60185

PRODUCT: "EXTERIOR DOOR PRODUCT" 6'-8" WOOD-EDGE STEEL OPAQUE DOUBLE DOOR UNIT

PART OR ASSEMBLY: ANCHORING LOCATIONS & DETAILS

NO.	DATE	REVISIONS	BY
B	7/18/20	ANCHOR CORRECTION	SWS
A	4/6/18	ADDED THRESHOLDS	SWS

DATE: 5/26/17
SCALE: N.T.S.
DWG. BY: SWS
CHK. BY:
DRAWING NO.: DWG-MA-FL0211-17
SHEET 3 OF 3

MIAMI-DADE COUNTY
PRODUCT CONTROL SECTION
11805 SW 26 Street, Room 208
Miami, Florida 33175-2474
T (786) 315-2590 F (786) 315-2599
www.miamidade.gov/building

DEPARTMENT OF REGULATORY AND ECONOMIC RESOURCES (RER)
BOARD AND CODE ADMINISTRATION DIVISION

NOTICE OF ACCEPTANCE (NOA)

E.S. Windows, LLC
3550 NW 49th Street
Miami, FL 33142

SCOPE:

This NOA is being issued under the applicable rules and regulations governing the use of construction materials. The documentation submitted has been reviewed and accepted by Miami-Dade County RER-Product Control Section to be used in Miami-Dade County and other areas where allowed by the Authority Having Jurisdiction (AHJ).

This NOA shall not be valid after the expiration date stated below. The Miami-Dade County Product Control Section (In Miami-Dade County) and/ or the AHJ (in areas other than Miami-Dade County) reserve the right to have this product or material tested for quality assurance purposes. If this product or material fails to perform in the accepted manner, the manufacturer will incur the expense of such testing and the AHJ may immediately revoke, modify, or suspend the use of such product or material within their jurisdiction. RER reserves the right to revoke this acceptance if it is determined by Miami-Dade County Product Control Section that this product or material fails to meet the requirements of the applicable building code.

This product is approved as described herein and has been designed to comply with the Florida Building Code, including the High Velocity Hurricane Zone.

DESCRIPTION: Series "EL-150" Aluminum Fixed Window – L.M.I.

APPROVAL DOCUMENT: Drawing No. **W16-70**, titled "ES-EL150 Fixed Aluminum Wdw. (L.M.I)", sheets 1, 2, 2.1, 3, 3.1, 4 and 5 through 9 of 9, dated 11/13/16, with revision **D** dated 06/12/21, prepared by Al-Farooq Corporation, signed and sealed by Jalal Farooq, P.E., bearing the Miami-Dade County Product Control Revision stamp with the Notice of Acceptance number and expiration date by the Miami-Dade County Product Control Section.

MISSILE IMPACT RATING: Large and Small Missile Impact Resistant

LABELING: Each unit shall bear a permanent label with the manufacturer's name or logo, **Barranquilla, Colombia**, model/series, and following statement: "Miami-Dade County Product Control Approved", unless otherwise noted herein.

RENEWAL of this NOA shall be considered after a renewal application has been filed and there has been no change in the applicable building code negatively affecting the performance of this product.

TERMINATION of this NOA will occur after the expiration date or if there has been a revision or change in the materials, use, and/ or manufacture of the product or process. Misuse of this NOA as an endorsement of any product, for sales, advertising or any other purposes shall automatically terminate this NOA. Failure to comply with any section of this NOA shall be cause for termination and removal of NOA.

ADVERTISEMENT: The NOA number preceded by the words Miami-Dade County, Florida, and followed by the expiration date may be displayed in advertising literature. If any portion of the NOA is displayed, then it shall be done in its entirety.

INSPECTION: A copy of this entire NOA shall be provided to the user by the manufacturer or its distributors and shall be available for inspection at the job site at the request of the Building Official.

This NOA **revises NOA No. 20-1223.01** and consists of this page 1 and evidence pages E-1, E-2, E-3 and E-4, as well as approval document mentioned above.

The submitted documentation was reviewed by **Manuel Perez, P.E.**

MIAMI-DADE COUNTY APPROVED

8/20/21

NOA No. 21-0708.03
Expiration Date: May 18, 2022
Approval Date: September 02, 2021
Page 1

E.S. Windows, LLC

NOTICE OF ACCEPTANCE: EVIDENCE SUBMITTED

1. EVIDENCE SUBMITTED UNDER PREVIOUS NOA's

A. DRAWINGS

1. Manufacturer's die drawings and sections.
(Submitted under NOA No. 16-0617.05)

2. Drawing No. **W16-70**, titled "ES-EL150 Fixed Aluminum Wdw. (L.M.I)", sheets 1, 2, 2.1, 3, 3.1, 4 and 5 through 9 of 9, dated 11/13/16, with revision **C** dated 06/22/20, prepared by Al-Farooq Corporation, signed and sealed by Jalal Farooq, P.E.
(Submitted under NOA No. 20-1223.01)

B. TESTS

1. Test reports on: 1) Air Infiltration Test, per FBC, TAS 202-94
2) Uniform Static Air Pressure Test, Loading per FBC, TAS 202-94
3) Water Resistance Test, per FBC, TAS 202-94
4) Large Missile Impact Test per FBC, TAS 201-94
5) Cyclic Wind Pressure Loading per FBC, TAS 203-94
6) Safety Performance Test, (class A) per ANSI Z97.1
along with marked-up drawings and installation diagram of a series EL-150 aluminum fixed window, prepared by Fenestration Testing Laboratory, Inc., Test Report No. **FTL-12002**, dated 04/30/20, signed and sealed by Idalmis Ortega, P.E..
(Submitted under NOA No. 20-1223.01)

2. Test reports on: 1) Air Infiltration Test, per FBC, TAS 202-94
2) Uniform Static Air Pressure Test, Loading per FBC, TAS 202-94
3) Water Resistance Test, per FBC, TAS 202-94
4) Large Missile Impact Test per FBC, TAS 201-94
5) Cyclic Wind Pressure Loading per FBC, TAS 203-94
6) Safety Performance Test, (class A) per ANSI Z97.1
along with marked-up drawings and installation diagram of a series EL-150 aluminum fixed window, prepared by Fenestration Testing Laboratory, Inc., Test Report No. **FTL-11035**, dated 04/30/20, signed and sealed by Idalmis Ortega, P.E.
(Submitted under NOA No. 20-1223.01)

3. Test reports on: 1) Air Infiltration Test, per FBC, TAS 202-94
2) Uniform Static Air Pressure Test, Loading per FBC, TAS 202-94
3) Water Resistance Test, per FBC, TAS 202-94
4) Large Missile Impact Test per FBC, TAS 201-94
5) Cyclic Wind Pressure Loading per FBC, TAS 203-94
6) Safety Performance Test, (class A) per ANSI Z97.1
along with marked-up drawings and installation diagram of a series EL-150 aluminum fixed window, prepared by Fenestration Testing Laboratory, Inc., Test Report No. **FTL-11027**, dated 04/23/20, signed and sealed by Idalmis Ortega, P.E.
(Submitted under NOA No. 20-1223.01)

Manuel Perez

Manuel Pérez, P.E.
Product Control Examiner
NOA No. 21-0708.03
Expiration Date: May 18, 2022
Approval Date: September 02, 2021

1. EVIDENCE SUBMITTED UNDER PREVIOUS NOA's (CONTINUED)

B. TESTS (CONTINUED)

4. Test reports on: 1) Air Infiltration Test, per FBC, TAS 202-94
2) Uniform Static Air Pressure Test, Loading per FBC, TAS 202-94
3) Water Resistance Test, per FBC, TAS 202-94
along with marked-up drawings and installation diagram of aluminum fixed window, prepared by Blackwater Testing, Inc., Test Report No. **BT-ESW-16-004**, dated 11/14/16, and revised on 05/10/17, signed and sealed by Constantin Bortes, P.E.
(Submitted under NOA No. 16-0617.05)

5. Test reports on: 1) Large Missile Impact Test per FBC, TAS 201-94
2) Cyclic Wind Pressure Loading per FBC, TAS 203-94
along with marked-up drawings and installation diagram of aluminum fixed window, prepared by Blackwater Testing, Inc., Test Report No. **BT-ESW-17-012**, dated 05/10/17, signed and sealed by Constantin Bortes, P.E.
(Submitted under NOA No. 16-0617.05)

C. CALCULATIONS

1. Anchor verification calculations and structural analysis, complying with **FBC 5th Edition (2014)**, dated 11/16/16, revised on 12/21/16, and updated on 11/09/20 to comply with **FBC 7th Edition (2020)**, prepared by Al-Farooq Corporation, signed and sealed by Jalal Farooq, P.E.

2. Glazing complies with **ASTM E1300-09**

D. QUALITY ASSURANCE

1. Miami-Dade Department of Regulatory and Economic Resources (RER)

E. MATERIAL CERTIFICATIONS

1. Notice of Acceptance No. **19-0305.02** issued to **Kuraray America, Inc.** for their "**Trosifol® Ultraclear, Clear and Color PVB Glass Interlayers**" dated 05/09/19, expiring on 07/08/24.

2. Notice of Acceptance No. **18-0725.11** issued to **Kuraray America, Inc.** for their "**Kuraray SentryGlas® Xtra™ (SGX™) Clear Glass Interlayer**" dated 05/23/19, expiring on 05/23/24.

3. Notice of Acceptance No. **20-0622.03** issued to **Eastman Chemical Company (MA)** for their "**Saflex Storm - Saflex and Saflex HP Composite Glass Interlayers with PET Core**" dated 08/06/20, expiring on 12/11/23.

4. Notice of Acceptance No. **20-0622.02** issued to **Eastman Chemical Company (MA)** for their "**Saflex HP Clear or Color Glass Interlayers**" dated 08/06/20, expiring on 04/14/23.

Manuel Perez

Manuel Pérez, P.E.
Product Control Examiner
NOA No. 21-0708.03
Expiration Date: May 18, 2022
Approval Date: September 02, 2021

NOTICE OF ACCEPTANCE: EVIDENCE SUBMITTED

1. EVIDENCE SUBMITTED UNDER PREVIOUS NOA's (CONTINUED)

F. STATEMENTS

1. Statement letter of conformance, complying with **FBC 6th Edition (2017),** with **FBC 7th Edition (2020),** and of no financial interest, dated November 09, 2020, issued by Al-Farooq Corporation, signed and sealed by Jalal Farooq, P.E.
   (Submitted under NOA No. 20-1223.01)
2. Proposal No. **18-0784** issued by the Product Control Section, dated June 29, 2018, signed by Manuel Perez, P.E.
   (Submitted under NOA No. 20-1223.01)
3. Proposal No. **19-1230** issued by the Product Control Section, dated November 18, 2019, signed by Manuel Perez, P.E.
   (Submitted under NOA No. 20-1223.01)

G. OTHERS

1. Notice of Acceptance No. **17-1218.12**, issued to ES Windows, LLC, for their Series "EL-150" Aluminum Single Fixed Window – L.M.I., approved on 02/08/18 and expiring on 05/18/22.

Manuel Perez

Manuel Perez, P.E.
Product Control Examiner
NOA No. 21-0708.03
Expiration Date: May 18, 2022
Approval Date: September 02, 2021

NOTICE OF ACCEPTANCE: EVIDENCE SUBMITTED

2. NEW EVIDENCE SUBMITTED

A. DRAWINGS

1. Drawing No. **W16-70**, titled "ES-EL150 Fixed Aluminum Wdw. (L.M.I)", sheets 1, 2, 2.1, 3, 3.1, 4 and 5 through 9 of 9, dated 11/13/16, with revision **D** dated 06/15/21, prepared by Al-Farooq Corporation, signed and sealed by Jalal Farooq, P.E.

B. TESTS

1. None.

C. CALCULATIONS

1. Anchor verification calculations and structural analysis, complying with **FBC 5th Edition (2014)**, dated 11/16/16, revised on 12/21/16, updated on 11/09/20 to comply with **FBC 7th Edition (2020)** and further revised on 06/29/21 to include additional window sizes, prepared by Al-Farooq Corporation, signed and sealed by Jalal Farooq, P.E.
2. Glazing complies with **ASTM E1300-09**

D. QUALITY ASSURANCE

1. Miami-Dade Department of Regulatory and Economic Resources (RER)

E. MATERIAL CERTIFICATIONS

1. Notice of Acceptance No. **20-0915.22** issued to **Kuraray America, Inc.** for their "**Trosifol® Ultraclear, Clear and Color PVB Glass Interlayers**" dated 11/19/20, expiring on 07/08/24.
2. Notice of Acceptance No. **20-0915.19** issued to **Kuraray America, Inc.** for their **"SentryGlas® (Clear and White) Glass Interlayers**" dated 11/19/20, expiring on 07/04/23.
3. Notice of Acceptance No. **20-0622.03** issued to **Eastman Chemical Company (MA)** for their "**Saflex Storm - Saflex and Saflex HP Composite Glass Interlayers with PET Core**" dated 08/06/20, expiring on 12/11/23.
4. Notice of Acceptance No. **20-0622.02** issued to **Eastman Chemical Company (MA)** for their "**Saflex HP Clear or Color Glass Interlayers**" dated 08/06/20, expiring on 04/14/23.

F. STATEMENTS

1. Statement letter of conformance, complying with **FBC 7th Edition (2020)** dated June 25, 2021, issued by Al-Farooq Corporation, signed and sealed by Jalal Farooq, P.E.

G. OTHERS

1. Notice of Acceptance No. **20-1223.01**, issued to E.S. Windows, LLC, for their Series "EL-150" Aluminum Fixed Windows – L.M.I., approved on 04/22/21 and expiring on 05/18/22.

Manuel Perez

Manuel Perez, P.E.
Product Control Examiner
NOA No. 21-0708.03
Expiration Date: May 18, 2022
Approval Date: September 02, 2021

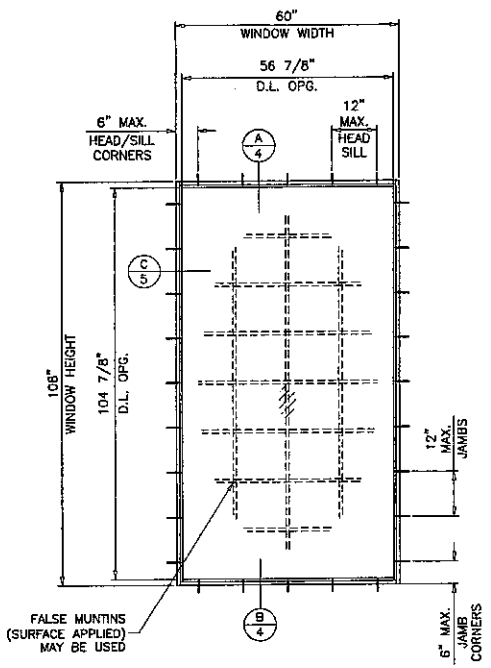

TYPICAL ELEVATION

FLANGE FRAMES

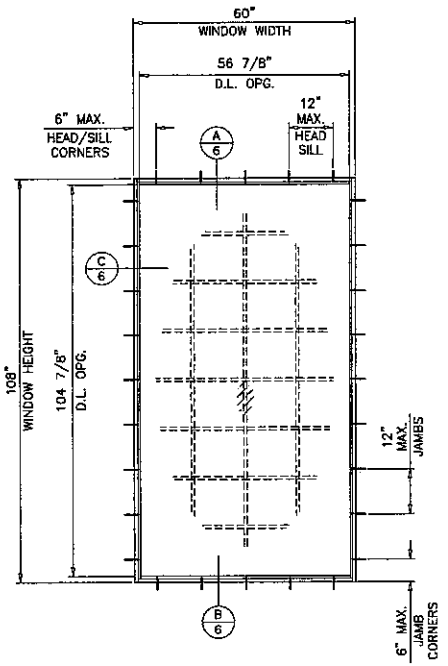

TYPICAL ELEVATION

FLANGE FRAMES WITH FLUSH ADAPTER

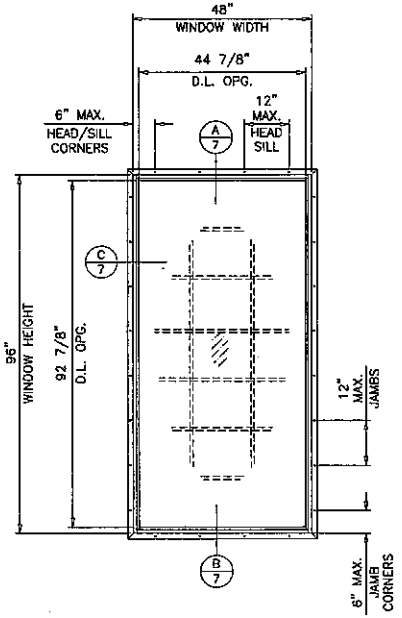

TYPICAL ELEVATION

FLANGE FRAMES WITH FIN ADAPTER

WINDOWS WITH FIN FRAME ADAPTERS LIMITED TO GLASS TYPES 'A', 'Ai', 'B', 'DI' & 'Ei' ONLY

ES-EL150
FIXED ALUMINUM WINDOW

DESIGN LOAD RATINGS FOR THESE WINDOWS TO BE AS PER CHARTS SHOWN ON SHEETS 3 AND 3.1.

APPROVAL APPLIES TO SINGLE UNITS OR SIDE BY SIDE COMBINATIONS OF FIX./FIX. OR FIXED WITH OTHER WINDOW TYPES IN MODULES OF TWO OR MORE WINDOWS USING MIAMI-DADE COUNTY APPROVED MULLIONS IN BETWEEN. LOWER DESIGN PRESSURE FROM WINDOWS OR MULLION APPROVAL WILL APPLY TO ENTIRE SYSTEM.

THIS PRODUCT HAS BEEN DESIGNED AND TESTED TO COMPLY WITH THE REQUIREMENTS OF THE 2020 (7TH EDITION) FLORIDA BUILDING CODE INCLUDING HIGH VELOCITY HURRICANE ZONE (HVHZ).

1BY OR 2BY WOOD BUCKS & BUCK FASTENERS BY OTHERS, MUST BE DESIGNED AND INSTALLED ADEQUATELY TO TRANSFER APPLIED PRODUCT LOADS TO THE BUILDING STRUCTURE.

ANCHORS SHALL BE CORROSION RESISTANT, SPACED AS SHOWN ON DETAILS AND INSTALLED PER MANUF'S INSTRUCTIONS. SPECIFIED EMBEDMENT TO BASE MATERIAL SHALL BE BEYOND WALL DRESSING OR STUCCO.

A LOAD DURATION INCREASE IS USED IN DESIGN OF ANCHORS INTO WOOD ONLY.

ALL SHIMS TO BE HIGH IMPACT, NON-METALLIC AND NON-COMPRESSIBLE.

MATERIALS INCLUDING BUT NOT LIMITED TO STEEL/METAL SCREWS, THAT COME INTO CONTACT WITH OTHER DISSIMILAR MATERIALS SHALL MEET THE REQUIREMENTS OF THE 2020 FLORIDA BLDG. CODE & ADOPTED STANDARDS.

THIS PRODUCT APPROVAL IS GENERIC AND DOES NOT PROVIDE INFORMATION FOR A SITE SPECIFIC PROJECT, i.e. LIFE SAFETY OF THIS PRODUCT, ADEQUACY OF STRUCTURE RECEIVING THIS PRODUCT AND SEALING AROUND OPENING FOR WATER INFILTRATION RESISTANCE ETC.
CONDITIONS NOT SHOWN IN THIS DRAWING ARE TO BE ANALYZED SEPARATELY, AND TO BE REVIEWED BY BUILDING OFFICIAL.

DESIGN LOADS SHOWN ARE BASED ON 'ALLOWABLE STRESS DESIGN (ASD)'.

DAYLITE OPENINGS:
D.L.O. HEIGHT = WINDOW HEIGHT - 3.125"
D.L.O. WIDTH = WINDOW WIDTH - 3.125"

WINDOWS WITH GLASS TYPES 'AA', 'BB' & 'AAi' COMPLY WITH REQUIREMENTS OF ANSI Z97.1.

THESE WINDOWS ARE RATED FOR LARGE & SMALL MISSILE IMPACT. SHUTTERS ARE NOT REQUIRED.

PRODUCT REVISED
as complying with the Florida Building Code
NOA-No. 21-0708.03
Expiration Date: 05/18/2022
By: Manuel Perez
Miami-Dade Product Control

JUL 0 6 2021

JALAL FAROOQ LICENSE No. 61223 STATE OF FLORIDA PROFESSIONAL ENGINEER

AL-FAROOQ CORPORATION
ENGINEERS & PRODUCT DEVELOPMENT
9360 SUNSET DRIVE, SUITE 220
MIAMI, FLORIDA 33173 (C.A.N. 3536)
TEL. (305) 284-8100 FAX. (305) 262-9978
COMP-ANL\W16-70ES

ES-EL150 FIXED ALUMINUM WDW. (L.M.I.)

E.S. WINDOWS, LLC
3550 N.W. 49 STREET
MIAMI, FL. 33142
TEL. (305) 638-5151 FAX. (305) 638-5158

revisions:			
mo	date	by	description
A	05.12.17		NO CHANGE THIS SHEET
B	11.27.17		UPDATED TO 2017 FBC
C	08.22.20		GENERAL REVISION
D	06.15.21		NO CHANGE THIS SHEET

date: 11-13-16
scale: 1/2"=1'-0"
dr. by: TARIQ
chk. by:

drawing no.
W16-70
sheet 1 of 9

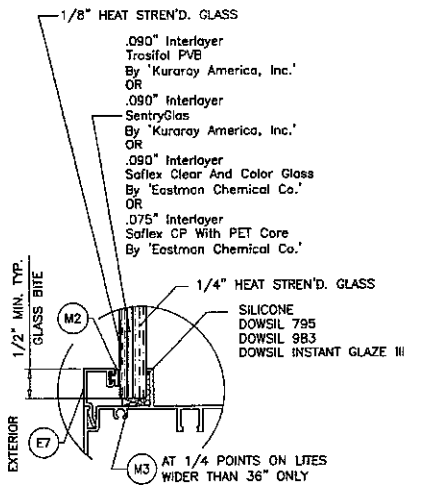

GLASS TYPE 'A'
7/16" OVERALL LAM. GLASS

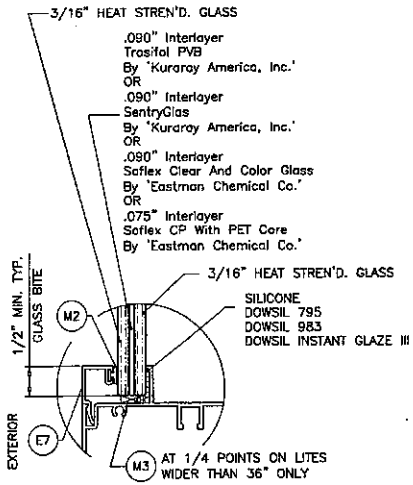

GLASS TYPE 'B'
7/16" OVERALL LAM. GLASS

5/16" AIR SPACE CONSISTING OF:
SPACER:
'HELIMA' LOW PROFILE ALUMINUM SPACER
BY 'LINGERMANN GMBH'
AROUND THE PERIMETER OF THE GLASS.
PERIMETER SEALANT:
SILICONE
DOWSIL 791
GE 2000

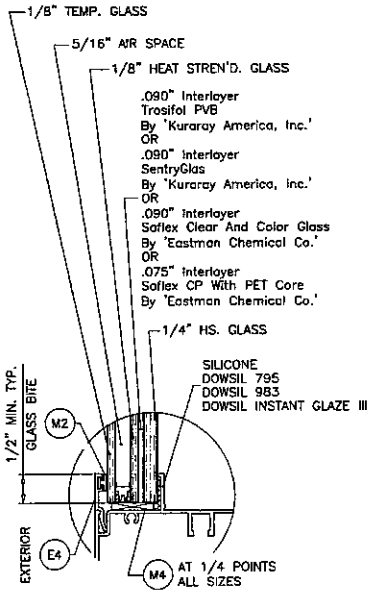

GLASS TYPE 'Ai'
7/8" OVERALL INSUL. LAM. GLASS

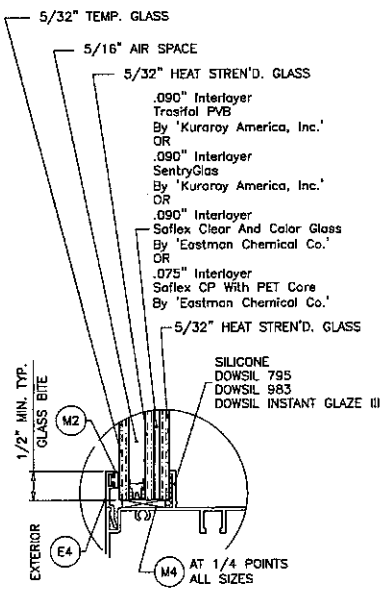

GLASS TYPE 'Di'
7/8" OVERALL INSUL. LAM. GLASS

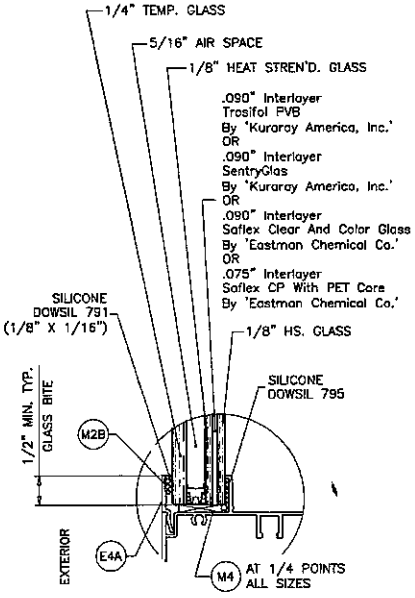

GLASS TYPE 'Ei'
7/8" OVERALL INSUL. LAM. GLASS

GLAZING OPTIONS

PRODUCT REVISED
as complying with the Florida Building Code
NOA-No. 21-0708.03
Expiration Date: 05/18/2022
By: Manuel Perez
Miami-Dade Product Control

JUL 06 2021

JALAL FAROOQ LICENSE No. 81223 STATE OF FLORIDA PROFESSIONAL ENGINEER

AL-FAROOQ CORPORATION
ENGINEERS & PRODUCT DEVELOPMENT
9360 SUNSET DRIVE, SUITE 220
MIAMI, FLORIDA 33173 (C.A.N. 3538)
TEL. (305) 264-8100 FAX. (305) 262-0978
COMP-ANL\W16-70ES

ES-EL150 FIXED ALUMINUM WDW. (L.M.I.)

E.S. WINDOWS, LLC
3550 N.W. 49 STREET
MIAMI, FL. 33142
TEL. (305) 638-5151 FAX. (305) 638-5158

revisions:			
no	date	by	description
A	05.12.17		GLAZING DETAILS REV.
B	11.27.17		NO CHANGE THIS SHEET
C	06.22.20		GENERAL REVISION
D	06.15.21		NO CHANGE THIS SHEET

date: 11-13-16
scale: 1/2" = 1"
dr. by: TARIQ
chk. by:
drawing no. W16-70
sheet 2 of 9

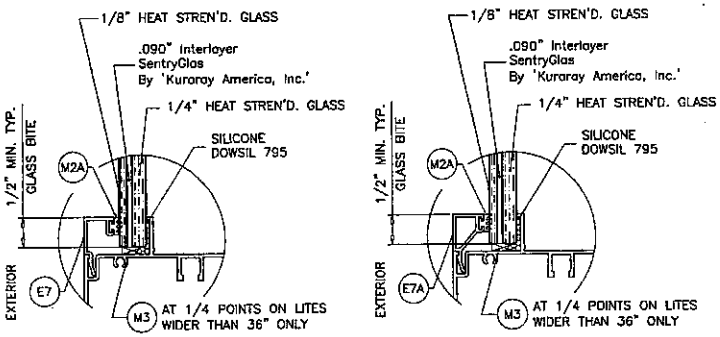

GLASS TYPE 'AA'
7/16" OVERALL LAM. GLASS

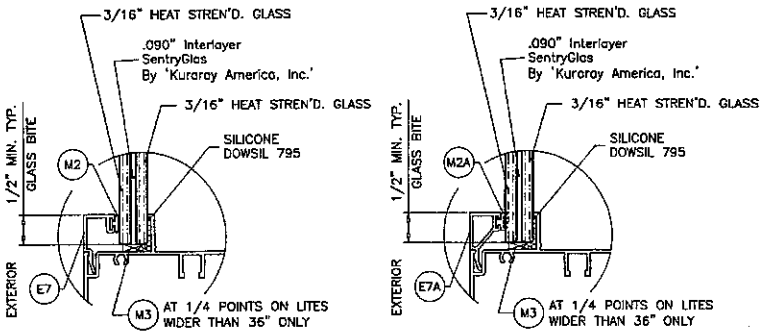

GLASS TYPE 'BB'
7/16" OVERALL LAM. GLASS

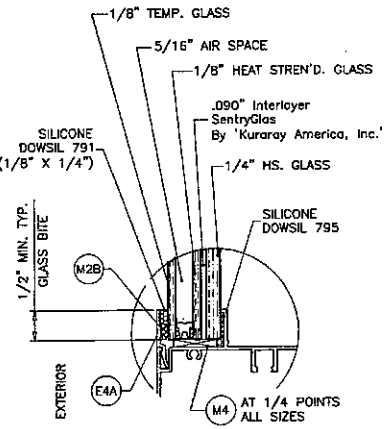

GLASS TYPE 'AAi'
7/8" OVERALL INSUL. LAM. GLASS

5/16" AIR SPACE CONSISTING OF:
SPACER:
'HELIMA' LOW PROFILE ALUMINUM SPACER
BY 'LINGERMANN GMBH'
AROUND THE PERIMETER OF THE GLASS.
PERIMETER SEALANT:
SILICONE
DOWSIL 791
GE 2000

PRODUCT REVISED
as complying with the Florida Building Code
NOA-No. 21-0708.03
Expiration Date: 05/18/2022
By: Manuel Perez
Miami-Dade Product Control

JUL 0 6 2021

JALAL FAROOQ LICENSE No. 81223 STATE OF FLORIDA PROFESSIONAL ENGINEER

GLAZING OPTIONS

AL-FAROOQ CORPORATION
ENGINEERS & PRODUCT DEVELOPMENT
9360 SUNSET DRIVE, SUITE 220
MIAMI, FLORIDA 33173 (C.A.N. 3538)
TEL. (305) 264-9100 FAX. (305) 262-6978
COMP-ANL\W16-70ES

ES-EL150 FIXED ALUMINUM WDW. (L.M.I.)

E.S. WINDOWS, LLC
3550 N.W. 49 STREET
MIAMI, FL. 33142
TEL. (305) 638-5151 FAX. (305) 638-5158

revisions:			
no	date	by	description
C	06.22.20		GENERAL REVISION
D	06.15.21		NO CHANGE THIS SHEET

date: 11-13-16
scale: 1/2" = 1"
dr. by: TARIQ
chk. by:
drawing no. W16-70
sheet 2.1 of 9

DESIGN LOAD CAPACITY – PSF FLANGE FRAMES, FLUSH FRAMES, FIN FRAMES					
WINDOW DIMS.		GLASS TYPE 'A'		GLASS TYPES 'B', 'Ai', 'Di', 'Ei'	
WIDTH	HEIGHT	EXT.(+)	INT.(–)	EXT.(+)	INT.(–)
30"	48"	60.0	80.0	80.0	80.0
36"		60.0	80.0	80.0	80.0
42"		60.0	68.6	80.0	80.0
48"		60.0	60.0	80.0	80.0
54"		60.0	60.0	80.0	80.0
60"		60.0	60.0	80.0	80.0
30"	54"	60.0	80.0	80.0	80.0
36"		60.0	80.0	80.0	80.0
42"		60.0	68.6	80.0	80.0
48"		60.0	60.0	80.0	80.0
54"		53.3	53.3	71.1	71.1
60"		53.3	53.3	71.1	71.1
30"	60"	60.0	80.0	80.0	80.0
36"		60.0	80.0	80.0	80.0
42"		60.0	68.6	80.0	80.0
48"		60.0	60.0	80.0	80.0
54"		53.3	53.3	71.1	71.1
60"		48.0	48.0	64.0	64.0
30"	66"	60.0	80.0	80.0	80.0
36"		60.0	80.0	80.0	80.0
42"		60.0	68.6	80.0	80.0
48"		60.0	60.0	80.0	80.0
54"		53.3	53.3	71.1	71.1
60"		48.0	48.0	64.0	64.0
30"	72"	60.0	80.0	80.0	80.0
36"		60.0	80.0	80.0	80.0
42"		60.0	68.6	80.0	80.0
48"		60.0	60.0	80.0	80.0
54"		53.3	53.3	71.1	71.1
60"		48.0	48.0	64.0	64.0
30"	78"	60.0	80.0	80.0	80.0
36"		60.0	76.0	80.0	80.0
42"		60.0	68.6	80.0	80.0
48"		60.0	60.0	80.0	80.0
54"		53.3	53.3	71.1	71.1
30"	84"	60.0	80.0	80.0	80.0
36"		60.0	76.4	80.0	80.0
42"		60.0	68.6	80.0	80.0
48"		60.0	60.0	80.0	80.0
54"		53.3	53.3	71.1	71.1
30"	90"	60.0	80.0	80.0	80.0
36"		60.0	75.0	80.0	80.0
42"		60.0	67.1	80.0	80.0
48"		60.0	60.0	80.0	80.0
30"	96"	60.0	80.0	80.0	80.0
36"		60.0	73.8	80.0	80.0
42"		60.0	65.8	80.0	80.0
48"		60.0	60.0	80.0	80.0

DESIGN LOAD CAPACITY – PSF FLANGE FRAMES, FLUSH FRAMES, FIN FRAMES					
WINDOW DIMS.		GLASS TYPE 'A'		GLASS TYPES 'B', 'Ai', 'Di', 'Ei'	
WIDTH	HEIGHT	EXT.(+)	INT.(–)	EXT.(+)	INT.(–)
30"	102"	60.0	80.0	80.0	80.0
36"		60.0	78.1	80.0	80.0
36"		60.0	72.9	80.0	80.0
39"		60.0	68.5	80.0	80.0
42"		60.0	64.8	80.0	80.0
45"		60.0	61.6	80.0	80.0
30"	108"	60.0	80.0	80.0	80.0
33"		60.0	77.3	80.0	80.0
36"		60.0	72.0	80.0	80.0
39"		60.0	67.6	80.0	80.0
42"		60.0	63.8	80.0	80.0
30"	114"	60.0	80.0	80.0	80.0
33"		60.0	76.5	80.0	80.0
36"		60.0	71.3	80.0	80.0
39"		60.0	66.8	80.0	80.0
30"	120"	60.0	80.0	80.0	80.0
33"		60.0	75.9	80.0	80.0
36"		60.0	70.6	80.0	80.0
30"	126"	60.0	80.0	80.0	80.0
33"		60.0	75.3	80.0	80.0
36"		60.0	70.0	80.0	80.0
30"	132"	60.0	80.0	80.0	80.0
33"		60.0	74.8	80.0	80.0
30"	138"	60.0	80.0	80.0	80.0
33"		60.0	74.3	80.0	80.0
30"	144"	60.0	80.0	80.0	80.0

DESIGN LOAD CAPACITY – PSF FLANGE FRAMES, FLUSH FRAMES, FIN FRAMES					
WINDOW DIMS.		GLASS TYPE 'A'		GLASS TYPES 'B', 'Ai', 'Di', 'Ei'	
WIDTH	HEIGHT	EXT.(+)	INT.(–)	EXT.(+)	INT.(–)
19–1/8"	26"	60.0	80.0	80.0	80.0
26–1/2"		60.0	80.0	80.0	80.0
37"		60.0	80.0	80.0	80.0
48"		60.0	80.0	80.0	80.0
53–1/8"		60.0	80.0	80.0	80.0
19–1/8"	38–3/8"	60.0	80.0	80.0	80.0
26–1/2"		60.0	80.0	80.0	80.0
37"		60.0	77.8	80.0	80.0
48"		60.0	75.0	80.0	80.0
53–1/8"		60.0	75.0	80.0	80.0
19–1/8"	50–5/8"	60.0	80.0	80.0	80.0
26–1/2"		60.0	80.0	80.0	80.0
37"		60.0	77.8	80.0	80.0
48"		60.0	80.0	80.0	80.0
53–1/8"		56.9	56.9	75.9	75.9
19–1/8"	58"	60.0	80.0	80.0	80.0
26–1/2"		60.0	80.0	80.0	80.0
37"		60.0	77.8	80.0	80.0
48"		60.0	60.0	80.0	80.0
53–1/8"		54.2	54.2	72.3	72.3
19–1/8"	63"	60.0	80.0	80.0	80.0
26–1/2"		60.0	80.0	80.0	80.0
37"		60.0	77.8	80.0	80.0
48"		60.0	60.0	80.0	80.0
53–1/8"		54.2	54.2	72.3	72.3
19–1/8"	76"	60.0	80.0	80.0	80.0
26–1/2"		60.0	80.0	80.0	80.0
37"		60.0	77.2	80.0	80.0
48"		60.0	60.0	80.0	80.0
53–1/8"		54.2	54.2	72.3	72.3

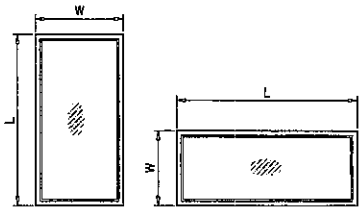

NOTE:
WIDTH AND LENGTH DIMENSIONS CAN BE ORIENTED VERTICALLY OR HORIZONTALLY AS SHOWN ABOVE.

NOTE:
GLASS CAPACITIES ON THIS SHEET ARE BASED ON ASTM E1300–09 (3 SEC. GUSTS).

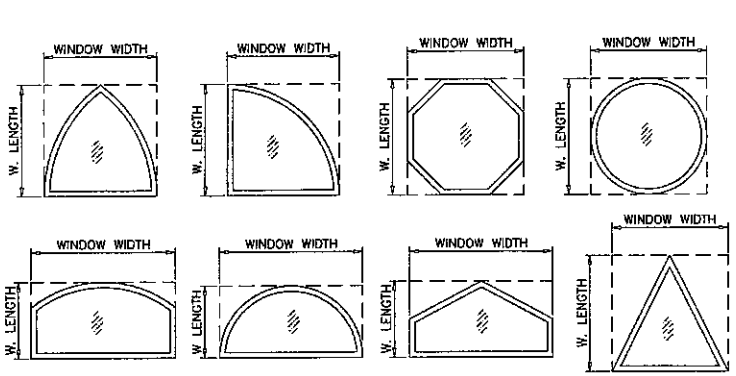

ALLOWABLE LOADS FOR ALTERNATE SHAPES AS SHOWN ABOVE OR SIMILAR CAN BE VERIFIED BY INSCRIBING PICTURE WINDOW SHAPE WITHIN SQUARE OR RECTANGLE AS SHOWN IN DOTTED LINES AND OBTAINING ALLOWABLE LOADS FROM THOSE SHAPES.

PRODUCT REVISED
as complying with the Florida Building Code
NOA No. 21-0708.03
Expiration Date: 05/18/2022
By: Manuel Perez
Miami-Dade Product Control

JUL 0 6 2021

JALAL FAROOQ LICENSE No. 81223 STATE OF FLORIDA PROFESSIONAL ENGINEER

AL-FAROOQ CORPORATION
ENGINEERS & PRODUCT DEVELOPMENT
9380 SUNSET DRIVE, SUITE 220
MIAMI, FLORIDA 33173 (C.A.N. 3538)
TEL. (305) 264-8100 FAX. (305) 262-4978

COMP–ANL\W16–70ES

ES–EL150 FIXED ALUMINUM WDW. (L.M.I.)

E.S. WINDOWS, LLC
3550 N.W. 49 STREET
MIAMI, FL. 33142
TEL. (305) 638–5151 FAX. (305) 638–5158

revisions:			
mo date	by	description	
A 05.12.17		GLASS CHART REV.	
B 11.27.17		NO CHANGE THIS SHEET	
C 08.22.20		GENERAL REVISION	
D 06.13.21		WDW. SIZES ADDED	

date: 11–13–16
scale: 1/2" = 1"
dr. by: TARIO
chk. by:
drawing no. W16–70
sheet 3 of 9

DESIGN LOAD CAPACITY – PSF FLANGE FRAMES & FLUSH FRAMES ONLY					
WINDOW DIMS.		GLASS TYPES 'AA' & 'AAi'		GLASS TYPE 'BB'	
WIDTH	HEIGHT	EXT.(+)	INT.(–)	EXT.(+)	INT.(–)
48"	48"	80.0	105.0	80.0	100.0
54"		80.0	105.0	80.0	100.0
60"		80.0	105.0	80.0	100.0
66"		80.0	105.0	80.0	100.0
72"		80.0	105.0	80.0	100.0
78"		80.0	105.0	80.0	100.0
48"	54"	80.0	105.0	80.0	100.0
54"		71.1	93.3	80.0	88.9
60"		71.1	93.3	80.0	88.9
66"		71.1	93.3	80.0	88.9
72"		–	–	80.0	88.9
78"		–	–	80.0	88.9
48"	60"	80.0	105.0	80.0	100.0
54"		71.1	93.3	80.0	88.9
60"		64.0	84.0	80.0	80.0
66"		–	–	80.0	80.0
72"		–	–	80.0	80.0
78"		–	–	80.0	80.0
48"	66"	80.0	105.0	80.0	100.0
54"		71.1	93.3	80.0	88.9
60"		–	–	80.0	80.0
66"		–	–	72.7	72.7
72"		–	–	72.7	72.7
78"		–	–	72.7	72.7
48"	72"	80.0	105.0	80.0	100.0
54"		–	–	80.0	88.9
60"		–	–	80.0	80.0
66"		–	–	72.7	72.7
72"		–	–	66.7	66.7
78"		–	–	66.7	66.7
48"	78"	80.0	105.0	80.0	100.0
54"		–	–	80.0	88.9
60"		–	–	80.0	80.0
66"		–	–	72.7	72.7
72"		–	–	66.7	66.7
78"		–	–	61.5	61.5
42"	84"	80.0	105.0	80.0	100.0
48"		–	–	80.0	100.0
54"		–	–	80.0	88.9
60"		–	–	80.0	80.0
66"		–	–	72.7	72.7
72"		–	–	66.7	66.7
42"	90"	80.0	105.0	80.0	100.0
48"		–	–	80.0	100.0
54"		–	–	80.0	80.0
60"		–	–	80.0	80.0
66"		–	–	72.7	72.7
72"		–	–	66.7	66.7
36"	96"	80.0	105.0	80.0	100.0
42"		–	–	80.0	100.0
48"		–	–	80.0	100.0
54"		–	–	80.0	80.0
60"		–	–	80.0	80.0
66"		–	–	72.7	72.7

DESIGN LOAD CAPACITY – PSF FLANGE FRAMES & FLUSH FRAMES ONLY					
WINDOW DIMS.		GLASS TYPES 'AA' & 'AAi'		GLASS TYPE 'BB'	
WIDTH	HEIGHT	EXT.(+)	INT.(–)	EXT.(+)	INT.(–)
36"	102"	80.0	105.0	80.0	100.0
42"		–	–	80.0	100.0
48"		–	–	80.0	80.0
54"		–	–	80.0	80.0
60"		–	–	80.0	80.0
30"	108"	80.0	105.0	80.0	80.0
42"		–	–	80.0	100.0
48"		–	–	80.0	80.0
54"		–	–	80.0	80.0
60"		–	–	80.0	80.0
30"	114"	80.0	105.0	80.0	80.0
48"		–	–	80.0	80.0
54"		–	–	80.0	80.0
30"	120"	80.0	105.0	80.0	80.0
48"		–	–	80.0	80.0
54"		–	–	80.0	80.0
30"	126"	80.0	105.0	80.0	80.0
24"	132"	80.0	105.0	80.0	80.0
42"		–	–	80.0	80.0
48"		–	–	80.0	80.0
24"	138"	80.0	105.0	80.0	80.0
42"		–	–	80.0	80.0
24"	144"	80.0	105.0	80.0	80.0
42"		–	–	80.0	80.0

DESIGN LOAD CAPACITY – PSF FLANGE FRAMES & FLUSH FRAMES ONLY					
WINDOW DIMS.		GLASS TYPES 'AA' & 'AAi'		GLASS TYPE 'BB'	
WIDTH	HEIGHT	EXT.(+)	INT.(–)	EXT.(+)	INT.(–)
19–1/8"	26"	80.0	105.0	80.0	100.0
26–1/2"		80.0	105.0	80.0	100.0
37"		80.0	105.0	80.0	100.0
48"		80.0	105.0	80.0	100.0
53–1/8"		80.0	105.0	80.0	100.0
19–1/8"	38–3/8"	80.0	105.0	80.0	100.0
26–1/2"		80.0	105.0	80.0	100.0
37"		80.0	105.0	80.0	100.0
48"		80.0	105.0	80.0	100.0
53–1/8"		80.0	105.0	80.0	100.0
19–1/8"	50–5/8"	80.0	105.0	80.0	100.0
26–1/2"		80.0	105.0	80.0	100.0
37"		80.0	105.0	80.0	100.0
48"		80.0	105.0	80.0	100.0
53–1/8"		75.9	99.6	80.0	94.8
19–1/8"	58"	80.0	105.0	80.0	100.0
26–1/2"		80.0	105.0	80.0	100.0
37"		80.0	105.0	80.0	100.0
48"		80.0	105.0	80.0	100.0
53–1/8"		72.3	94.9	80.0	90.4
19–1/8"	63"	80.0	105.0	80.0	100.0
26–1/2"		80.0	105.0	80.0	100.0
37"		80.0	105.0	80.0	100.0
48"		80.0	105.0	80.0	100.0
53–1/8"		72.3	94.9	80.0	90.4
19–1/8"	76"	80.0	105.0	80.0	100.0
26–1/2"		80.0	105.0	80.0	100.0
37"		80.0	105.0	80.0	100.0
48"		80.0	105.0	80.0	100.0
53–1/8"		–	–	80.0	90.4

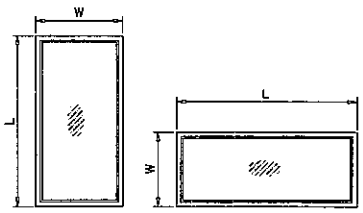

NOTE:
WIDTH AND LENGTH DIMENSIONS CAN BE ORIENTED VERTICALLY OR HORIZONTALLY AS SHOWN ABOVE.

NOTE:
GLASS CAPACITIES ON THIS SHEET ARE BASED ON ASTM E1300–09 (3 SEC. GUSTS).

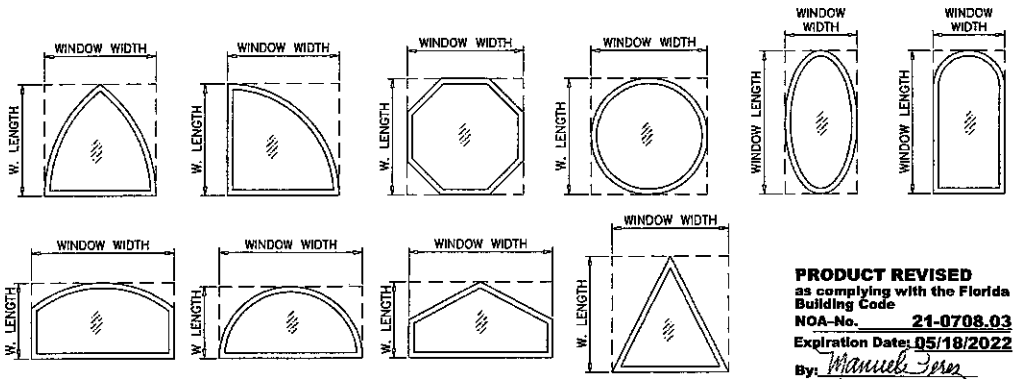

ALLOWABLE LOADS FOR ALTERNATE SHAPES AS SHOWN ABOVE OR SIMILAR CAN BE VERIFIED BY INSCRIBING PICTURE WINDOW SHAPE WITHIN SQUARE OR RECTANGLE AS SHOWN IN DOTTED LINES AND OBTAINING ALLOWABLE LOADS FROM THOSE SHAPES.

PRODUCT REVISED
as complying with the Florida Building Code
NOA-No. 21-0708.03
Expiration Date: 05/18/2022
By: Manuel Perez
Miami-Dade Product Control

JUL 06 2021

JALAL FAROOQ LICENSE No. 81224 STATE OF FLORIDA PROFESSIONAL ENGINEER

AL-FAROOQ CORPORATION
ENGINEERS & PRODUCT DEVELOPMENT
9360 SUNSET DRIVE, SUITE 220
MIAMI, FLORIDA 33173 (C.A.N. 3538)
TEL. (305) 284-9100 FAX. (305) 262-6878
COMP-ANL\W16-70ES

ES-EL150 FIXED ALUMINUM WDW. (L.M.I.)

E.S. WINDOWS, LLC
3550 N.W. 49 STREET
MIAMI, FL. 33142
TEL. (305) 638-5151 FAX. (305) 638-5158

revisions:			
no	date	by	description
C	08.22.20		GENERAL REVISION
D	06.15.21		WDW. SIZES ADDED

date: 11-13-16
scale: 1/2" = 1"
dr. by: TARO
chk. by:
drawing no. W16-70
sheet 3.1 of 9

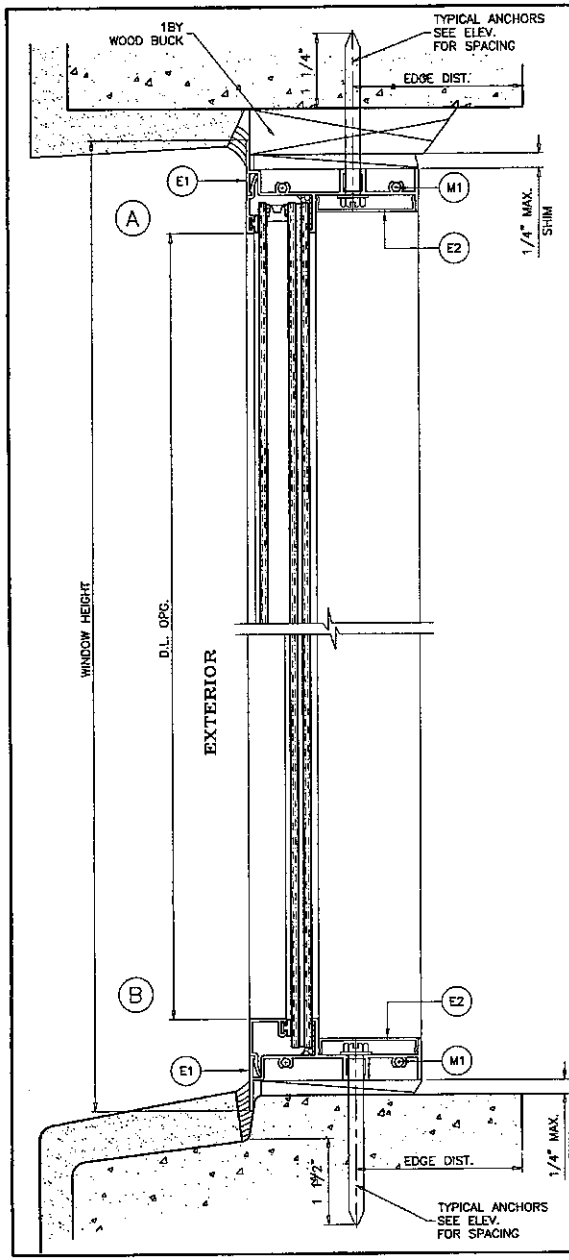

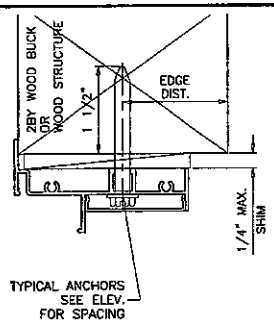

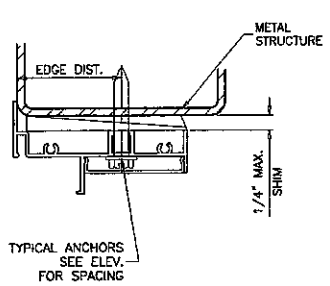

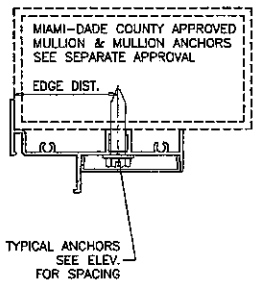

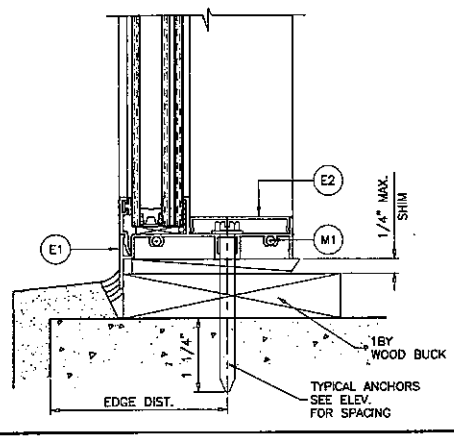

WOOD BUCKS AND METAL STRUCTURE NOT BY 'E.S. WINDOWS' MUST SUSTAIN LOADS IMPOSED BY GLAZING SYSTEM AND TRANSFER THEM TO THE BUILDING STRUCTURE.

TYPICAL ANCHORS: SEE ELEV. FOR SPACING

1/4" DIA. TAPCON BY 'ITW' (Fu=125 KSI, Fy=100 KSI)
1/4" DIA. ULTRACON+ BY 'DEWALT' (Fu=164 KSI, Fy=148 KSI)
INTO 2BY WOOD BUCKS OR WOOD STRUCTURES
1-1/2" MIN. PENETRATION INTO WOOD (HEAD/SILL/JAMBS)

THRU 1BY BUCKS INTO CONC. OR MASONRY
1-1/4" MIN. EMBED INTO CONCRETE (HEAD/SILL/JAMBS)
1-1/4" MIN. EMBED INTO MASONRY (JAMBS)

DIRECTLY INTO CONCRETE OR MASONRY
1-1/2" MIN. EMBED INTO CONCRETE (HEAD/SILL/JAMBS)
1-1/4" MIN. EMBED INTO MASONRY (JAMBS)

1/4" DIA. TEKS OR SELF DRILLING SCREWS (GRADE 5 CRS)
INTO MIAMI-DADE COUNTY APPROVED MULLIONS
OR
INTO METAL STRUCTURES (HEAD/SILL/JAMBS)
(3) THREADS MIN. TO EXTEND BEYOND METAL THICKNESS
ALUMINUM: 1/8" THK. MIN. (6063-T5 MIN.)
STEEL: 1/8" THK. MIN. (Fy = 36 KSI MIN.)
(STEEL IN CONTACT WITH ALUMINUM TO BE PLATED OR PAINTED)

TYPICAL EDGE DISTANCE

INTO CONCRETE AND MASONRY = 2" MIN.
INTO WOOD STRUCTURE = 1" MIN.
INTO METAL STRUCTURE = 3/4" MIN.

WOOD AT HEAD, SILL OR JAMBS SG = 0.55 MIN.
CONCRETE AT HEAD, SILL OR JAMBS f'c = 3000 PSI MIN.
C-90 HOLLOW/FILLED BLOCK AT JAMBS f'm = 2000 PSI MIN.

PRODUCT REVISED
as complying with the Florida Building Code
NOA-No. 21-0708.03
Expiration Date: 05/18/2022
By: Manuel Perez
Miami-Dade Product Control

JAL AL FAROOQ LICENSE No. 81223 STATE OF FLORIDA PROFESSIONAL ENGINEER

JUL 06 2021

AL-FAROOQ CORPORATION
ENGINEERS & PRODUCT DEVELOPMENT
9360 SUNSET DRIVE, SUITE 220
MIAMI, FLORIDA 33173 (C.A.N. 3538)
TEL. (305) 284-8100 FAX. (305) 282-6978
COMP-ANL.W16-70ES

ES-EL150 FIXED ALUMINUM WDW. (L.M.I.)

E.S. WINDOWS, LLC
3550 N.W. 49 STREET
MIAMI, FL. 33142
TEL. (305) 638-5151 FAX. (305) 638-5158

no	date	by	description
A	05.12.17		NO CHANGE THIS SHEET
B	11.27.17		UPDATED TO 2017 FBC
C	08.22.20		GENERAL REVISION
D	05.15.21		NO CHANGE THIS SHEET

date: 11-13-18
scale: 1/2" = 1"
dr. by: TARIQ
chk. by:
drawing no. W16-70
sheet 4 of 9

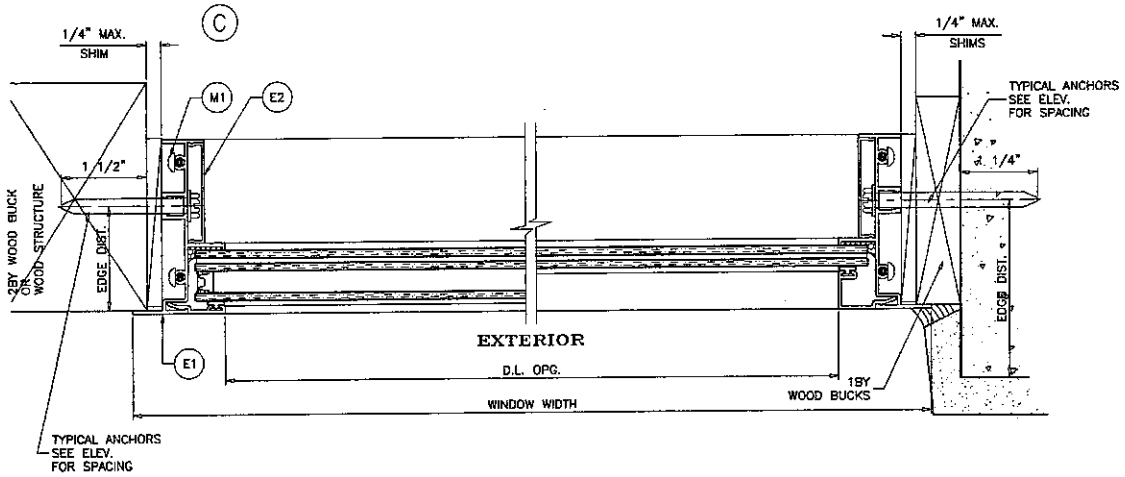

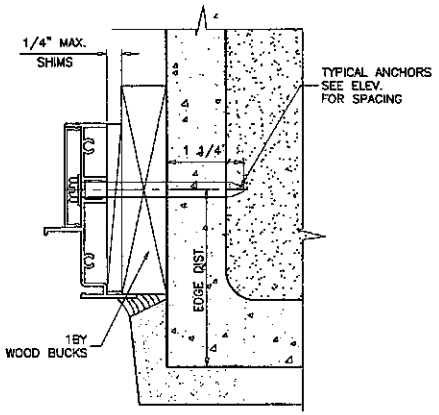

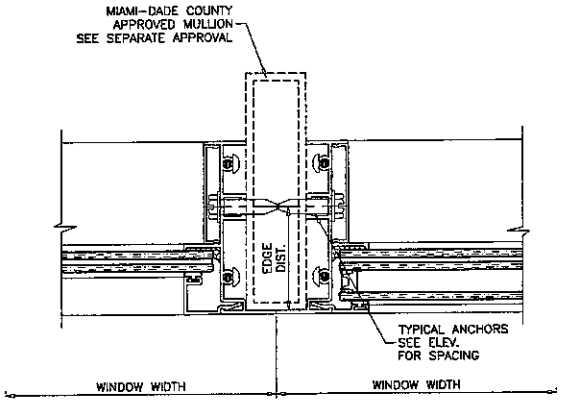

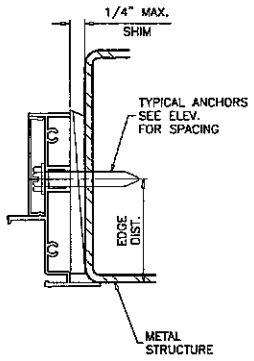

PRODUCT REVISED
as complying with the Florida Building Code
NOA-No. 21-0708.03
Expiration Date: 05/18/2022
By: Manuel Perez
Miami-Dade Product Control

JUL 0 6 2021

JALAL FAROOQ LICENSE No. 81223 STATE OF FLORIDA PROFESSIONAL ENGINEER

AL-FAROOQ CORPORATION
ENGINEERS & PRODUCT DEVELOPMENT
9380 SUNSET DRIVE, SUITE 220
MIAMI, FLORIDA 33173 (C.A.N. 3538)
TEL. (305) 264-9100 FAX. (305) 262-9978
COMP-ANL W16-70ES

ES-EL150 FIXED ALUMINUM WDW. (L.M.I.)

E.S. WINDOWS, LLC
3550 N.W. 49 STREET
MIAMI, FL. 33142
TEL. (305) 638-5151 FAX. (305) 638-5158

revisions:

no	date	by	description
A	05.12.17		NO CHANGE THIS SHEET
B	11.27.17		NO CHANGE THIS SHEET
C	06.22.20		GENERAL REVISION
D	06.15.21		NO CHANGE THIS SHEET

date: 11-13-16
scale: 1/2" = 1"
dr. by: TARIQ
chk. by:

drawing no. W16-70
sheet 5 of 9

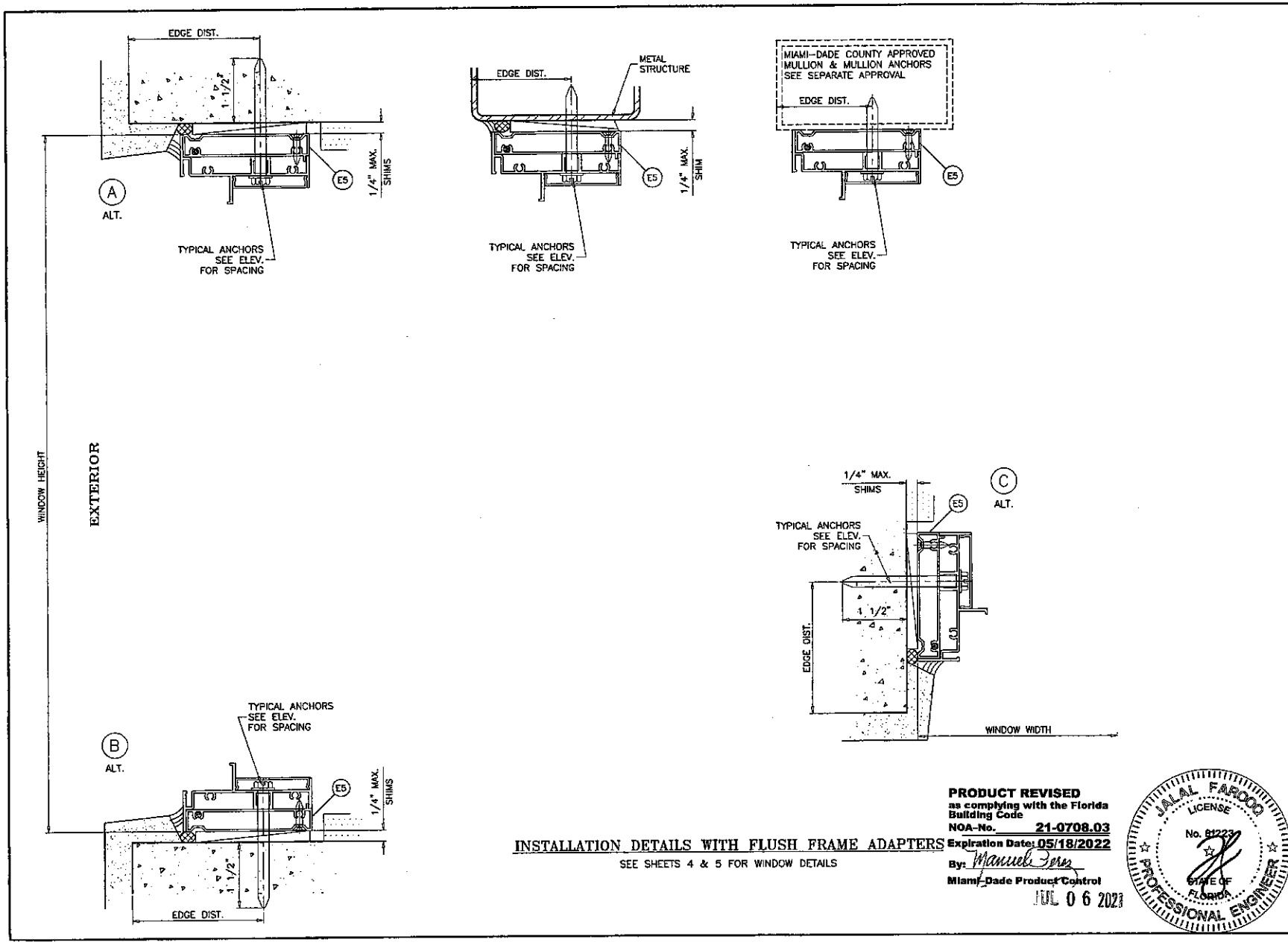

INSTALLATION DETAILS WITH FLUSH FRAME ADAPTERS

SEE SHEETS 4 & 5 FOR WINDOW DETAILS

PRODUCT REVISED
as complying with the Florida Building Code
NOA-No. 21-0708.03
Expiration Date: 05/18/2022
By: Manuel Perez
Miami-Dade Product Control
JUL 0 6 2023

JALAL FAROOQ LICENSE No. 81223 STATE OF FLORIDA PROFESSIONAL ENGINEER

AL-FAROOQ CORPORATION
ENGINEERS & PRODUCT DEVELOPMENT
9360 SUNSET DRIVE, SUITE 220
MIAMI, FLORIDA 33173 (C.A.N. 3538)
TEL. (305) 264-8100 FAX. (305) 262-6979
COMP-ANL\W16-70ES

ES-EL150 FIXED ALUMINUM WDW. (L.M.I.)

E.S. WINDOWS, LLC
3550 N.W. 49 STREET
MIAMI, FL. 33142
TEL. (305) 638-5151 FAX. (305) 638-5158

revisions:

no	date	by	description
A	05.12.17		NO CHANGE THIS SHEET
B	11.27.17		NO CHANGE THIS SHEET
C	06.22.20		GENERAL REVISION
D	06.15.21		NO CHANGE THIS SHEET

date: 11-13-16
scale: 1/2" = 1"
dr. by: TARIQ
chk. by:

drawing no. W16-70

sheet 6 of 9

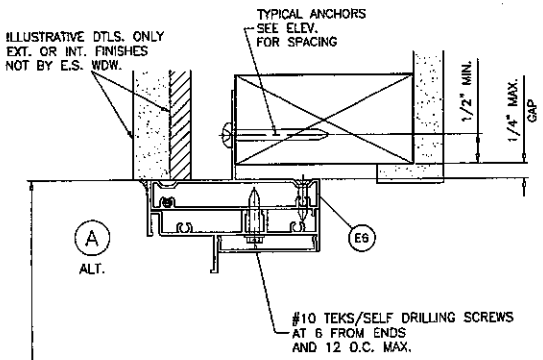

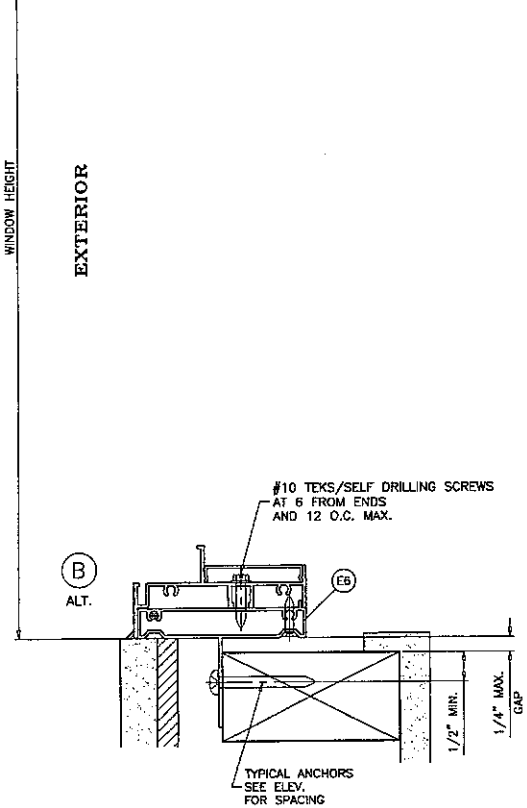

TYPICAL ANCHORS: SEE ELEV. FOR SPACING

#10 WOOD SCREWS (GRADE 2 CRS)
INTO 2BY WOOD BUCKS OR WOOD STRUCTURES
1-1/2" MIN. PENETRATION INTO WOOD

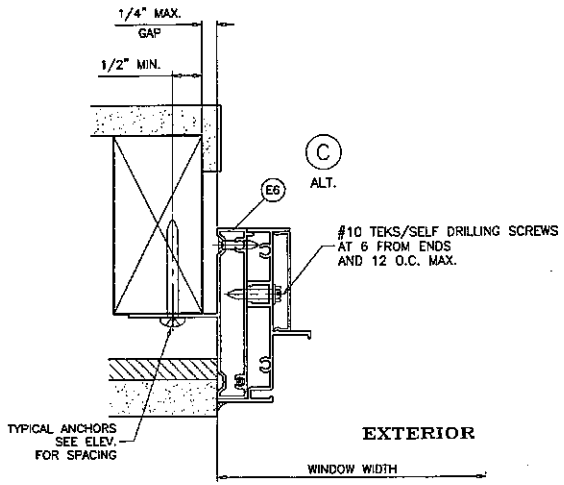

INSTALLATION DETAILS WITH FIN FRAME ADAPTERS

SEE SHEETS 4 & 5 FOR WINDOW DETAILS

PRODUCT REVISED
as complying with the Florida Building Code
NOA No. 21-0708.03
Expiration Date: 05/18/2022
By: Manuel Perez
Miami-Dade Product Control

JUL 06 2021

JALAL FAROOQ LICENSE No. 81223 STATE OF FLORIDA PROFESSIONAL ENGINEER

AL-FAROOQ CORPORATION
ENGINEERS & PRODUCT DEVELOPMENT
9380 SUNSET DRIVE, SUITE 220
MIAMI, FLORIDA 33173 (C.A.N. 5538)
TEL. (305) 264-8100 FAX. (305) 262-9978
COMP-ANL\W16-70ES

ES-EL150 FIXED ALUMINUM WDW. (L.M.I.)

E.S. WINDOWS, LLC
3550 N.W. 49 STREET
MIAMI, FL. 33142
TEL. (305) 638-5151 FAX. (305) 638-5158

revisions:			
no	date	by	description
A	05.12.17		NO CHANGE THIS SHEET
B	11.27.17		NO CHANGE THIS SHEET
C	06.22.20		GENERAL REVISION
D	06.15.21		NO CHANGE THIS SHEET

date: 11-13-18
scale: 1/2" = 1"
dr. by: TARIQ
chk. by:
drawing no. W16-70
sheet 7 of 9

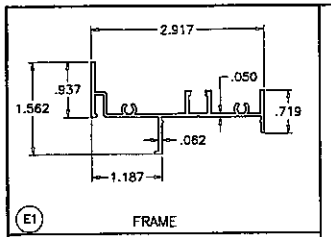

(E1) FRAME

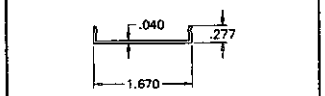

(E2) FRAME SCREW COVER

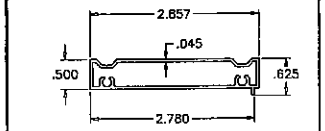

(E5) FLUSH FRAME ADAPTER

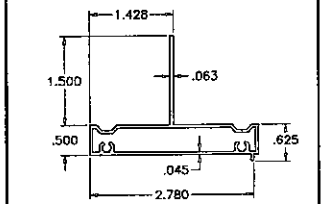

(E6) FLUSH FRAME ADAPTER WITH FIN

ITEM #	PART #	REQD.	DESCRIPTION	MATERIAL	MANF./SUPPLIER/REMARKS
E1	ES-EL151	1	FRAME	6063-T6	-
E2	ES-EL152	AS REQD.	FRAME SCREW COVER	6063-T6	-
E4	ES-EL111	AS RQD.	GLAZING BEAD (INSUL. LAM. GLASS)	6063-T6	-
E4A	ES-EL116	AS RQD.	GLAZING BEAD (INSUL. LAM. GLASS)	6063-T6	-
E5	ES-EL112	AS REQD.	FLUSH FRAME ADAPTER	6063-T6	-
E6	ES-EL115	AS REQD.	FLUSH FRAME ADAPTER WITH FIN	6063-T6	-
E7	ES-EL110	AS RQD.	GLAZING BEAD (7/16" LAM. GLASS)	6063-T6	-
E7A	ES-EL123	AS RQD.	GLAZING BEAD (7/16" LAM. GLASS)	6063-T6	-
M1	#8 X 1"	-	FRAME ASSEMBLY FASTENERS	ST. STEEL	PH SMS
M2	ES-5008A	AS REQD.	EXTERIOR BULB GASKET	SILICONE	DUROMETER 60±5 SHORE A
M2A	EL100-G02	AS REQD.	EXTERIOR LEAF GASKET	SILICONE	DUROMETER 60±5 SHORE A
M2B	ES-H-340-G05	AS REQD.	EXTERIOR WEDGE GASKET	SILICONE	DUROMETER 65±5 SHORE A
M3	80-372A	2/ LITE	SETTING BLOCK AT 1/4 POINTS (LAM. GLASS)	SILICONE	DUROMETER 80±5 SHORE A
M4	EL100-B01	2/ LITE	SETTING BLOCK AT 1/4 POINTS (INSUL. LAM. GLASS)	SILICONE	DUROMETER 80±5 SHORE A
M5	#8 X 1"	-	FLUSH/FIN FRAME ADAPTER ASSEMBLY FASTENERS	ST. STEEL	FH SMS

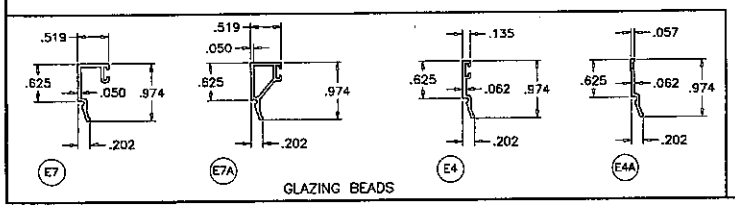

(E7) (E7A) (E4) (E4A) GLAZING BEADS

PRODUCT REVISED
as complying with the Florida Building Code
NOA-No. 21-0708.03
Expiration Date: 05/18/2022
By: Manuel Perez
Miami-Dade Product Control

JUL 06 2021

JALAL FAROOQ LICENSE No. 81223 STATE OF FLORIDA PROFESSIONAL ENGINEER

afc
AL-FAROOQ CORPORATION
ENGINEERS & PRODUCT DEVELOPMENT
9360 SUNSET DRIVE, SUITE 220
MIAMI, FLORIDA 33173 (C.A.N. 3538)
TEL. (305) 264-8100 FAX. (305) 262-6978
COMP-ANL\W16-70ES

ES-EL150 FIXED ALUMINUM WDW. (L.M.I.)

E.S. WINDOWS, LLC
3550 N.W. 49 STREET
MIAMI, FL. 33142
TEL. (305) 638-5151 FAX. (305) 638-5158

revisions:

no	date	by	description
A	05.12.17		REV. PER RER COMMENTS
B	11.27.17		NO CHANGE THIS SHEET
C	06.22.20		GENERAL REVISION
D	06.15.21		NO CHANGE THIS SHEET

date: 11-13-16
scale: 1/2" = 1"
dr. by: TARIQ
chk. by:
drawing no. W16-70
sheet 8 of 9

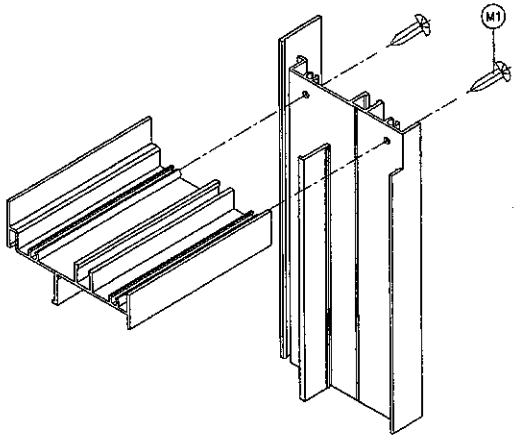

RECT. OR SQUARE WINDOWS

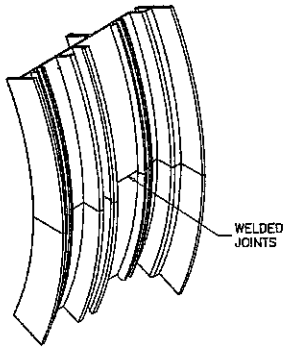

CIRCULAR WINDOWS

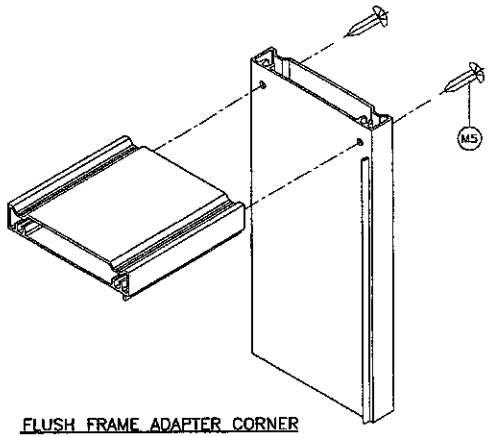

FLUSH FRAME ADAPTER CORNER

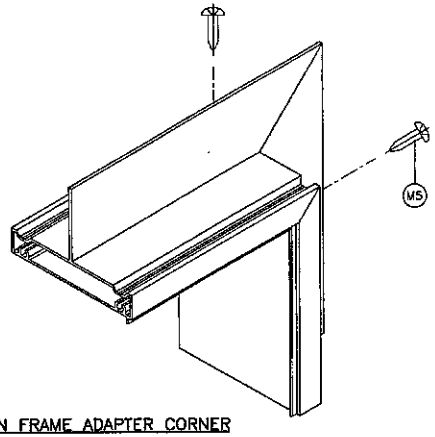

FIN FRAME ADAPTER CORNER

PRODUCT REVISED
as complying with the Florida Building Code
NOA-No. 21-0708.03
Expiration Date: 05/18/2022
By: Manuel Perez
Miami-Dade Product Control

JUL 06 2021

JALAL FAROOQ LICENSE No. 81211 STATE OF FLORIDA PROFESSIONAL ENGINEER

AL-FAROOQ CORPORATION
ENGINEERS & PRODUCT DEVELOPMENT
9360 SUNSET DRIVE, SUITE 220
MIAMI, FLORIDA 33173 (C.A.N. 3538)
TEL. (305) 264-8100 FAX. (305) 262-8978
COMP-ANL\W16-70ES

ES-EL150 FIXED ALUMINUM WOW. (L.M.I.)

E.S. WINDOWS, LLC
3550 N.W. 49 STREET
MIAMI, FL. 33142
TEL. (305) 638-5151 FAX. (305) 638-5158

revisions:			
no	date:	by	description
A	05.12.17		NO CHANGE THIS SHEET
B	11.27.17		NO CHANGE THIS SHEET
C	05.22.20		GENERAL REVISION
D	06.15.21		NO CHANGE THIS SHEET

date: 11-13-16
scale: 1/2" = 1"
dr. by: TARIQ
chk. by:
drawing no. W16-70
sheet 9 of 9

Sponsored by: City Manager

ORDINANCE NO. 2022-02

AN ORDINANCE OF THE CITY COMMISSION OF THE CITY OF OPA-LOCKA, FLORIDA AMENDING CHAPTER 2, ARTICLE XI, DIVISION 13 ENTITLED "HISTORIC ENVIRONMENTAL PRESERVATION BOARD" TO ESTABLISH MINIMUM STANDARDS FOR MUNICIPAL HISTORIC PRESERVATION PROGRAMS AS SET FORTH IN THE MIAMI-DADE COUNTY HISTORIC PRESERVATION ORDINANCE SECTION 16A-3.1; PROVIDING FOR BOARD ORGANIZATION AND QUALIFICATIONS; BOARD DUTIES AND RESPONSIBILITIES; SCOPE OF REGULATIONS; DEFINITIONS; ADMINISTRATION AND ENFORCEMENT RULES AND REGULATIONS; SITE/DISTRICT/ZONE DESIGNATION PROCESS AND PROCEDURES; DEMOLITION PROCESS AND PROCEDURES; PROCEDURES FOR MAINTENANCE OF DESIGNATED PROPERTIES; CERTIFICATE TO DIG PROCEDURES; AN APPEALS PROCESS; PENALTIES AND INCENTIVES; PROVIDING FOR SEVERABILITY; PROVIDING FOR CONFLICT AND REPEALER; RESCINDING ALL RESOLUTIONS IN CONFLICT; PROVIDING FOR AN EFFECTIVE DATE.

WHEREAS, pursuant to Ordinance 16-13, on October 12, 2016 the City of Opa-Locka, Florida ("City") established the Historic Environmental Preservation Board ("Board") in order to preserve and protect the City's historic and cultural heritage and foster civic pride; and

WHEREAS, the Historic Environmental Preservation Board was also established to protect the green environment within the City, especially, the preservation of its trees in order to support Arbor Day principles; and

WHEREAS, pursuant to Chapter 2, Article XI, Division 13, Sec. 2-570.81 and Sec. 2-570.82 of the City of Opa-Locka's Code of Ordinances, the City created, provided for composition; term of office; qualifications; organization; meetings, records standards and established duties and responsibilities of the Historic Environmental Preservation Board; and

WHEREAS, the City Commission desires to amend Chapter 2, Article XI, Division 13 entitled "Historic Environmental Preservation Board" to, among other things, establish minimum standards for municipal historic preservation programs as set forth in the applicable Miami-Dade County Historic Preservation Ordinance.

NOW, THEREFORE, BE IT ORDAINED BY THE CITY COMMISSION OF THE CITY OF OPA-LOCKA, FLORIDA AS FOLLOWS:

SECTION 1. The recitals to the preamble herein are incorporated by reference.

SECTION 2. The City Commissioner of the City of Opa-Locka, Florida hereby amends Chapter 2, Article XI, Division 13 entitled: "Historic Environmental Preservation Board" as follows:

Sec. 2-570.81. - Created; composition; term of office; qualifications; organization; meetings; records.

(a) A Historic Environmental Preservation Board ("Board") is hereby created, which shall be an advisory body to the commission, consisting of nine (9) members, each of whom shall be appointed by the city commission, for a term of ~~two (2) or~~ four (4) years. ~~for each member, except for the initial terms of the board upon its creation. The terms shall be staggered such that not fewer than two (2) nor more than three terms shall expire each year. The terms of board members shall commence on October 1 and shall expire on September 30.~~ Each member of the board shall serve until the expiration of his or her term. Members shall be eligible for reappointment. The City Commission of the City of Opa-Locka shall attempt to appoint architects, realtors, historians, art historians, lawyers, engineers, archaeologists or other individuals from the business, financial, or other segments of the community who, by virtue of their profession or business, have demonstrated concern for historic preservation. The Historic Environmental Preservation Board shall include not less than one architect; one real estate agent or attorney at law; and one historian or architectural historian. The City Manager shall provide qualified professional staff for the Board.

(b) At least five (5) members of the historic environmental board shall be residents of the City of Opa-locka, ~~and a registered voter of the City of Opa-locka,~~ Florida. ~~The city commission shall specifically designate these resident members.~~ The city commission, within its discretion, ~~shall~~ may appoint up to a maximum of four (4) members of the board who are not residents ~~or registered voters~~ of the City of Opa-locka, Florida. These four (4) appointments shall be made on the basis of civic pride, integrity, experience and interest in the field of historic preservation and city beautification. ~~Members of the historic environmental preservation board shall have diverse backgrounds, and whenever possible, prior experience in land use, planning, zoning, legal matters, landscape architecture, historic preservation or working knowledge of historic preservation principles and general working~~

~~knowledge of tree and plant identification and characteristics.~~ Members of the historic environmental preservation board shall hold no other public office or position in the City of Opa-locka.

(c) ~~An organizational meeting of the historic environmental preservation board shall be held to~~ The members of the Historic Environmental Preservation Board shall elect a chair and vice-chair from among its appointed members. The city commission ~~upon written charges and after public hearing~~ may remove members and vacancies shall be filled for the unexpired term of any removed member.

(d) ~~At least one (1) regular meeting of the board shall be held each month, as needed, but~~ Meetings of the Historic Environmental Preservation Board shall meet not less than six (6) times in any calendar year. ~~Regular meetings may be called by the Chair or staff for the board. The historic environmental preservation board shall keep record of its proceedings,~~ Records shall be maintained pursuant to Florida law, findings and determinations showing the vote on each matter and shall file the record and approved minutes of each meeting with the city clerk within thirty (30) days of the date of the meeting, or as soon thereafter as practicable. Members of the historic environmental board shall serve without compensation.

(e) The historic environmental preservation board may adopt reasonable rules of procedure to govern the conduct of its business and the holding of public hearings and workshops, consistent with procedures established for it by the city commission.

Sec. 2-570.82. - Duties and responsibilities.

The Historical Preservation Board shall have the following enumerated powers and duties:

1) Adopt or amend rules of procedure for its meetings.
2) Advise the City Commission as to designated individual sites, districts and archeological zones.
3) Recommend the issuance or denial of Certificates of Appropriateness and Certificates to Dig.

4) Recommend the approval of historical markers and recommend the issuance of certificates of recognition for individual sites and designated properties in a district.
5) Recommend zoning and building code amendments to the proper authorities.
6) Recommend to the City Commission guidelines for preservation and criteria for issuance by staff of regular certificates of appropriateness.
7) Promote the awareness of historic preservation and its community benefits.
8) No actions of this Board will supersede or be construed as superseding the authority of the City Commission.
9) Review and recommend update the Historic Survey as it applies to the City of Opa-locka and conduct such local research as is considered appropriate.
10) Implement the authority of this Ordinance and fulfill the tasks set forth for this Board by the City Commissioners.
11) Record and maintain records of the Board's actions and decisions.
12) Follow and abide by the laws of the United States of America, the State of Florida, Miami-Dade County, and the City of Opa-Locka.
13) Provide an annual report to the City Commission.
14) Make recommendations regarding planting and care of shade and ornamental trees and shrubbery now located or which may hereafter be planted in any public highway, park or pathway, except such as are excluded pursuant to applicable law, including the planting, trimming, spraying care and protection thereof.
(15) Make recommendations to regulate and control the use of the ground as may be necessary for proper growth, care and protection of trees and shrubbery.
(16) Recommend the removal of any tree or part thereof dangerous to public safety.
(17) Propose regulations, subject to approval by the city commission.
(18) Recommend the treatment or removal of any tree situated upon private property which is believed to harbor a disease or insects readily communicable to neighboring healthy trees in the care of the city.

19) Comply with all other minimum standards as set forth in Miami-Dade County Ordinance 81-13, Chapter 16-A pertaining to Historic Preservation.

Sec. 2-570.83. Scope of Regulations

This Ordinance is intended to and shall govern and be applicable to all property located in the City of Opa-locka, Florida. Nothing contained herein shall be deemed to supersede or conflict with applicable building and zoning codes. Provisions contained herein shall be cumulative and read in conjunction with other laws, rules and regulations. It is the legislative intent of the City of Opa-locka Commission that this Ordinance shall meet the requirements of Chapter 16A, Sec. 16A-3.1 of Miami-Dade County Code of Ordinances as a qualified municipal Historic Preservation Ordinance, and that this Ordinance shall be filed with the Clerk of Miami-Dade County Board of County Commissioners and with the National Register of Historical places for certification to be eligible under the relevant Tax Act.

Sec. 2-570.84. Definitions

(1) Archeological zone - An area designated by this ordinance which likely to yield information on the history and pre-history of Opa-locka based on prehistoric settlement patterns in Opa-locka as determined by the results of the Dade County Historic Survey and local research. These Zones will tend to conform to natural physiographic features which were the focal points for pre- historic and historic activities.

(2) Certificates of Appropriateness - A certificate issued by the City Commission after recommendation by the Board permitting certain alterations or improvements to a designated property.

(A) Regular Certificate of Appropriateness - A Regular Certificate of Appropriateness shall be issued by the staff of the Preservation Board, based on the guidelines for preservation approved by the City Commission.

(B) Special Certificate of Appropriateness - For all applications for a Special Certificate of Appropriateness involving the demolition, removal, reconstruction or new

construction at an individual site or in a district a Special Certificate of Appropriateness is required that is issued directly by the Board.

(3) Certificate to Dig - A certificate that gives the Board's permission for certain digging projects that may involve the discovery of as yet unknown or known archeological sites in an archeological zone. This certificate is issued by staff of the Board based on the guidelines for preservation approved by the Board.

(4) Certificate of Recognition - A certificate issued by the Board recognizing properties designated pursuant to this ordinance.

(5) City Commission – City of Opa-Locka Commission.

(6) Demolition - The complete constructive removal of a building of any site.

(7) Districts - A collection of archeological sites, buildings, structures, landscape features or other improvements that are concentrated in the same area and have been designated as a district pursuant to this ordinance.

(8) Exterior - All outside surfaces of a building or structure.

(9) Guidelines for Preservation - Criteria used by staff in determining the validity of applications for a Regular Certificate of Appropriateness and any Certificate to Dig and to establish a set of guide- lines for the preservation of buildings in Opa-locka. Minimum guidelines for preservation shall be that of the Secretary of Interior's Standards for the Treatment of Historic Properties, as may be amended from time to time. The City Commission may establish additional standards.

(10) Historical Preservation Board – The Board created and established by this ordinance as described in Section 2-570.81.

(11) Historic Survey - A comprehensive survey compiled by the Historic Preservation Division of the Miami-Dade County Office of Community and Economic Development involving the identification, research and documentation of buildings, sites and structures of any historical, cultural, archeological or architectural, importance in Miami-Dade County, Florida.

(12) Individual Site - An archeological site, building, structure, place or other improvement that has been designated as an individual site pursuant to this ordinance. Under the provisions of this ordinance interior spaces may be regulated only where a building or structure is designated individual site.

(13) National Register of Historic Places - A federal listing maintained by the U.S. Department of the Interior of buildings, sites, structures and districts that have attained a quality of significance as determined by the Historic Preservation Act of 1966 as amended.

(14) Ordinary Repairs or Maintenance - Work done to prevent deterioration of a building or structure or decay of or damage to a building or structure or any part thereof by re- storing the building or structure as nearly as practicable to its condition prior to such deterioration, decay or damage.

(15) Owner of a Designated Property - As reflected on the current Metropolitan Dade County tax rolls or current title holder.

(16) Qualified Staff may be considered outside contractors of the City and shall be a person who has a bachelor's degree in historic preservation, architecture, architectural history, history, or other closely related field, and who has at least 3 years of professional experience in the field of historic preservation or as a historic preservation planner; or who has a master's degree in the above mentioned fields and who has at least 1 year of professional experience in the field of historic preservation or as a historic preservation planner.

~~(17) Undue Economic Hardship - Failure to issue a certificate would place an onerous and excessive financial burden upon the owner that would amount to the taking of the owner's property without just compensation.~~

(17) Landscape Feature - Any improvement or vegetation including, but not limited to outbuildings, walls, courtyards, fences, shrubbery, trees sidewalks, planters, plantings, gates, street furniture and exterior lighting.

The definitions set forth in the Miami-Dade County Ordinance 81-13, Chapter 16-A pertaining to Historic Preservation shall by adopted and also apply to this section in the event of conflict and as may otherwise be amended from time to time.

Sec. 2-570.85. Historic Preservation Board: Created and Established

~~There is hereby created an Historical Preservation Board, ("the Board"), as a board of the City of Opa-locka, Florida.~~ The Board is hereby vested with the power, authority and jurisdiction to recommend the designation, regulation and administration of historical, cultural, archeological and architectural resources in Opa-locka, Florida, as prescribed by this Ordinance under the direct jurisdiction and legislative control of the Opa-locka City Commission.

Sec. 2-570.86. Rules and Regulations

The Board shall make and prescribe such rules and regulations as are reasonably necessary and appropriate for the proper administration and enforcement of the provisions of this Ordinance. Such rules and regulations shall conform to the provisions of this Ordinance and shall not conflict with the Constitution and general laws of the State of Florida, and shall govern and control procedures, hearings and actions of the board. No such rules and regulations shall become effective until a public hearing has been held upon the proposed rules and regulations, and any amendments or modifications thereto, and the same have been approved by the City Commission and filed with the City Clerk. Upon approval by the Commission, such rules and regulations shall have the force and effect of law within the City of Opa-locka, Florida. The City Commission shall prescribe forms for use by applicants in compliance with the provisions of this chapter.

Section 1. Designation Process and Procedure

I. The City Commission shall have the authority to designate areas, places, buildings, structures, landscape features, archeological sites and other improvements or physical features, as individual sites, districts, or archeological zones that are significant in Opa-locka's history, architecture, archeology, or culture and possesses an integrity of location, design, setting, materials, workmanship or association, or:

(A) Are associated with distinctive elements of the cultural, social political, economic, scientific, religious, prehistoric and architectural history that have contributed to the pattern of history in the community, Miami-Dade County, South Florida, the state or the nation; or

(B) Are associated with the lives of persons significant in our past; or

(C) Embody the distinctive characteristics of a type, period, style or method of construction or work of a master; or that possess high artistic value, or that represent a distinguishable entity whose components may lack individual distinction; or

(D) Have yielded, or are likely to yield information in history or prehistory; or

(E) Are listed in the National Register of Historic places. The City Commission shall conduct a separate public hearing to consider for designation each property within its jurisdiction listed in the National Register of Historic Places;

II. Certain properties which include cemeteries, birth- places, properties owned by religious institutions, or used for religious purposes, structures that have been moved from their original locations, properties commemorative in nature and properties that have achieved significance within the last twenty-five years, will not normally be considered for designation. However, such properties will qualify if they are integral parts of districts that do meet the criteria, or if they fall within the following categories:

(A) A religious property deriving primarysignificance from architectural or artistic distinction of historical importance.

(B) A building or structure removed from its location but which is primarily significant for architectural value,or is the surviving structure most importantly associated with an historic event or person.

(C) A birthplace or grave of an historicalfigure of outstanding importance if there is no other appropriate site or building directly associated with his/her productive life.

(D) A cemetery which derives its primary significance from graves of persons of transcendent importance, from age, distinctive design features, or from association with historic events.

(E) A property primarily commemorative in intent if design, age, tradition, or symbolic value has invested it with its own historical significance.

(F) A property or district achieving significance within the past twenty-five years if it is of exceptional importance.

III. Prior to the designation of an individual site, a district, or an archeological zone, an investigation and designation report must be filed with City. The format of these reports may vary according to the type of designation, however all reports must address the following: The historical, cultural, architectural,and archeological significance of the property of properties being recommended for designation; a recommendation of boundaries for districts and archeological zones and identification of boundaries of individual sites being designated; a recommendation of standards to be adopted by the City Commission in carrying out its regulatory function under this ordinance with respect to Certificates of Appropriateness and Certificates to Dig. Where a report is filed recommending designation of a district, the report must identify those properties, if any, within the district which are not historically or architecturally compatible with structures in the district. The standardsfor regulating such non-conforming properties shall provide that a Certificate of Appropriateness may be required only for new construction on such properties. All reports shall take into consideration projected, proposed or existing public improvements and developmental or renewal plans. The Board must produce at least one designation report per calendar year, and present it to the municipal historic preservation board for consideration, until all properties in its jurisdiction listed as historically significant on the municipality's or the County's previous surveys have been considered for designation.

IV. Procedure

(A) Petition of the Owner - The owner(s) of any property in the City of Opa-locka may petition the Board for recommendation of designation of their property as an individual site, district or archeological zone provided that they appearbefore the Board with sufficient information to warrant the investigation of the property for future designation and the Board finds that the property may be worthy of designation. The Miami-Dade County Historic Preservation Chief may also recommend the initiation of designations. The Board shall, based on its findings, either direct the staff to transfer its recommendation to the City Commission so that the City Commission can then direct City staff to begin the designation process or deny the petition.

(B) Directive of the Board - Upon recommendations from staff and the acceptance of petitions pursuant to this section, staff shall transmit the

Boards recommendations to the City Commission along with any other recommendations the Board may deem necessary, and submit its report to the City Commission.

(C) Notification of owner - For each proposed designation of an individual site, district, or archeological zonethe Board is encouraged to obtain the permission of the property owner(s) within the designated area, and is responsible for mailing a copy of the designation report to the owner(s) as notification of the intent of the Board to consider designation of the property at least 15 days prior to a public hearing held pursuant to this section.

(D) Notification of Government Agencies - Upon filing of a designation report, the Community Development Director shall immediately notify the Clerk of the Board of County Commissioners, the City Clerk, the City Building Official, the City Attorney and any other County or Municipal agency, including agencies with demolition powers, that may be affected by said filing.

(E) Notification of a Public Hearing – For each individual site, district or archeological zone proposed for designation a public hearing must be held as required by the Chapter 16A-3.1 of the Miami-Dade County Code of Ordinances.

(F) Requirement of Notification - The Board shall reduce to writing its recommendation to approve, deny, or amend the proposed designation and direct the Community Development Director to notify the City Commission following of its actions with a copy of the official minutes of the meeting, and a recommendation of the Board providing a summary statement of the effects of this action:

1) The City of Opa-locka Building Official,

2) The Opa-locka City Clerk,

3) Owner(s) of the affected property and other parties having an interest in the property, if known,

4) The Opa-locka Public WorksDepartment, and

5) Any other County or Municipal Agency, including agencies withdemolition powers, that may be affected by this action.

(G) Moratorium. Upon the filing of a designation report by the staff, the owner(s) of the real property which is the object matter of the designation report shall not:

1) Erect any structure on the subject property.

2) Alter, restore, renovate, move or demolish any structure on the subject property, until such time as final action, as provided by this chapter, is completed.

V. Demolition

A. Demolition of a designated building, structure, improvement or site may occur pursuant to an order of a government agency or a court of competent jurisdiction or pursuant to an application by the owner for a Special Certificate of Appropriateness.

B. Government agencies having the authority to demolish unsafe structures shall receive notice of designation of individual sites, districts or archeological zones pursuant to Section 10 of this Chapter. The City Commission shall be deemed an interested party and shall be entitled to receive notice of any public hearings conducted by said government agency regarding demolition of any designated property. The Board may make recommendations and suggestions to the City Commission and the owner(s) relative to the feasibility of and the public interest in preserving the designated property.

C. No permit for voluntary demolition of a designated building, structure, improvement or site shall be issued to the owner(s) thereof until an application for a Special Certificate of Appropriateness has been submitted and approved pursuant to the procedures in this Section. Refusal by the Board to grant a Special Certificate of Appropriateness shall be evidenced by written order detailing the public interest which is sought to be preserved. The Board shall be guided by the criteria contained in subsection V, D herein. The Board may grant a Special Certificate of Appropriate-ness which may provide for a delayed effective date of up to two (2) years. The effective date shall be determined by the Board based upon the relative significance of the structure and the prob-able time required to arrange a possible alternative to demolition. During the demolition delay period, the Board may take such steps as it deems necessary to preserve the structure concerned, in accordance with the purposes of this ordinance. Such steps may include, but shall not be limited to, consultation with civic groups public agencies and interested citizens, recommendations for acquisition of property by public or private bodies or agencies, and exploration of the possibility of moving one or more structures or other features.

D. In addition to all other provisions of this ordinance, the Board shall consider for recommendation to the City Commission the following criteria in evaluating applications for a Special Certificate of Appropriateness for demolition of designated properties:

(a) Is the structure of such interest or quality that it would reasonably meet national, state, or local criteria for designation as an historic or architectural landmark?

(b) Is the structure of such design, craftsmanship, or material that it could be reproduced only with great difficulty and/or expense?

(c) Is the structure one of the last remaining examples of its kind in the neighbor-hood, the County, or the region?

(d) Does the structure contribute significantly to the historic character of designated district?

(e) Would retention of the structure promote the general welfare of the County by providing an opportunity for study of local history, architecture, and design or by developing an understanding of the importance and value of a particular culture and heritage?

(f) Are there definite plans for reuse of the property if the proposed demolition is carried out, and what will be the effect of those plans on the character of the surrounding area?

VI. Where, by reason of particular site conditions and restraints, or because of unusual circumstances applicable solely to the particular applicant, strict enforcement of the provisions of this ordinance would result in serious undue economic hardship to the applicant, the matter shall be officially referred to the Opa-locka Zoning Board of Appeals which shall have the power to vary or modify adherence to this ordinance; provided always that its requirements ensure harmony with the general purposes hereof and will not adversely affect the City of Opa-locka, Dade County, nor the South Florida metropolitan region.

VII. No Building Permit shall be issued by the Opa-locka Building Official which affects any designated property in Dade County without a Certificate of Appropriateness.

VIII. All work performed pursuant to the issuance of any Certificate of Appropriateness shall conform to the requirements of the Certificate. The City Manager shall designate an appropriate official to assist the Board by making necessary inspections in connection with enforcement of this ordinance and shall be empowered to issue a stop work order if performance is not in accordance with the issued certificate. No work shall proceed as long as a stop work order continues in effect. Copies of inspection reports shall be furnished to the Board and copies of any stop work orders both to the Board and the applicant. The Building Official or appropriate official and staff for the Board shall be responsible for ensuring that any work not in accordance with an issued Certificate of Appropriateness shall be corrected to comply with the Certificate of Appropriateness prior to withdrawing the stop work order.

IX. For the purpose of remedying emergency conditions determined to be dangerous to life, health or property, nothing contained herein shall prevent the making of any temporary construction, reconstruction or other repairs to a

building or site in the City of Opa-locka, pursuant to an order of a government agency or a court of competent jurisdiction. The owner of a building damaged by fire or natural calamity shall be permitted to stabilize the building immediately without Board approval, and to rehabilitate it later under the normal review procedures of this ordinance.

X. The Board shall have the authority to review applications for Certificate of Appropriateness for all property in Opa-locka, however owned, by either private or public parties. The purposes of this ordinance shall apply equally to plans, projects or work executed or assisted by any private party, governmental body or agency, department, authority or board of the City, County or State.

XI. Demolition procedures and requirements shall otherwise comply with Chapter 16A-3.1 of the Miami-Dade County Code of Ordinances as may be amended from time to time.

Section 2. Maintenance of Designated Properties

Nothing in this ordinance shall be construed to prevent the ordinary maintenance or repair of any elements of any building or structure which does not involve a change of design, appearance or material, and which does not require a building permit.

Section 3. Certificates to Dig

I. Within an archeological zone, new construction, filling, digging, the removal of trees, or any other activity that may alter or reveal an interred archeological site shall be prohibited without a Certificate to Dig. All applications to all appropriate municipal or county agencies involving new construction, large scale digging, the removal of trees or any other activity that may reveal or disturb an interred archeological site, in an archeological zone shall require a Certificate to Dig before approval. Based on the designation report for the archeological zone, a complete application for a certificate to Dig and any additional guidelines the Board may deem necessary, the staff of the Board shall approve or deny the application for a Certificate to Dig by the owners of a property in a designated archeological zone. The Certificate to Dig may be made subject to specified conditions, including but not limited to, conditions regarding site excavation.

In order to comply with the site excavation requirements of the Certificate to Dig, the applicant may agree to permit a City or County sanctioned Archeologist to conduct excavation from the time of the approval of the Certificate to Dig until the effective date thereof. The findings of the staff shall be mailed to the applicant promptly. Applicant shall have the opportunity to challenge the staff decision or any conditions attached to the Certificate to Dig by requesting a meeting of the Board. The Board shall

convene within a reasonable time and shall make every effort to review and reconsider the original staff decision to arrive at an equitable decision. The decision of the Board shall be reduced to writing.

II. Approved Certificates to Dig - Approved Certificates to Dig shall contain an effective date at which time the proposed activity may begin, unless the Board decides to designate the site in question as an individual site or district pursuant to Section 10 of this ordinance in which case all the rules and regulations pertaining to the designation process shall apply from the date the designation report has been filed.

III. All work performed pursuant to the issuance of a Certificate to Dig shall conform to the requirements of such certificate. It shall be the duty of the City of Opa-locka, in particular its Public Works Department, to inspect from time to time any work pursuant to such certificate to assure compliance. In the event work is performed not in accordance with such certificate, the official designated by the City Manager pursuant to Section 1(VIII) shall be empowered to issue a stop work order and all work shall cease. No person, firm or corporation shall undertake any work on such projects as long as such stop work order shall continue in effect.

Section 4. Appeals

Upon written decision of the City Commission, an aggrieved party may appeal the decision by filing a written notice of appeal with the City Clerk. The notice of appeal shall state the decision which is being appealed, the grounds for the appeal, and a brief summary of the relief which is sought. Subsequently, the City Commission shall conduct a public hearing at which time they may affirm, modify or reverse the decision of the Board or of the City Commission. Nothing contained herein shall preclude the City Commission from seeking additional information prior to rendering a final decision. The decision of the City Commission shall be reflected in the minutes and a copy of the Minutes shall be forwarded to the board and the appealing party.

Within the time prescribed by the appropriate Florida Rules of Appellate Procedure, a party aggrieved by a decision of the City Commission may appeal an adverse decision to the Circuit Court in and for Dade County, Florida. The party taking the appeal shall be required to pay to the City of Opa-locka the sum of One Hundred Dollars ($100.00) to defray the costs of preparing the record on appeal.

Section 5. Penalties

Failure by an owner of record to comply with any provision of this ordinance shall constitute a violation hereof and shall be punishable by the City Commission by civil or criminal penalties including a fine of not more than $500.00 per day for each day the violation continues. In addition, the Board may require that any work

performed contrary to this ordinance must be removed and the property returned to its condition prior to commencement of said action.

Section 6. Incentives

All properties designated as individual sites or as designated properties within a district shall be eligible, upon application by the owner(s), for any available financial assistance set aside for historic preservation by Metropolitan Dade County contingent on the availability of funds and the scope of the project as described in the application.

SECTION 7. If any clause, section, or other part or application of this Resolution is held by any court of competent jurisdiction to be unconditional or invalid, in part or in application, it shall not affect the validity of the remaining portions or application of this Resolution.

SECTION 8. CONFLICT, ADDITIONS & REPEALER.

All ordinances, parts of ordinances or code provisions in conflict herewith ordinance are hereby repealed. To the extent of conflict between this Ordinance and Miami-Dade County Ordinance 81-13, Chapter 16-A pertaining to Historic Preservation, the Miami-Dade County Code of Ordinance shall control. Likewise, any provision not included herein, but specifically specified and required by Miami-Dade County Ordinance 81-13, Chapter 16-A pertaining to Historic Preservation in order to make the reading of this Ordinance complete, shall be interpreted as if the Miami-Dade Ordinance was incorporated herein.

SECTION 9. SEVERABILITY.

If any provision of this Ordinance or the application thereof to any person or circumstance is held invalid, such invalidity shall not affect other provisions of the Code or applications of this Ordinance that can be given effect without the invalid provision or application, and to this end the provisions of this Ordinance are declared to be severable.

SECTION 10. INCLUSION IN CODE.

It is the intention of the City Commission of the City of Opa-Locka that the provisions of this Ordinance shall at some time in the future become and be made a part of the Code of Ordinances of the City of Opa-Locka and that the sections of this Ordinance may be renumbered or re-lettered and the word "Ordinance" may be changed to "Chapter,"

"Section," "Article" or such other appropriate word or phrase, the use of which shall accomplish the intentions herein expressed; provided, however, that Section 1 hereof or the provisions contemplated thereby shall not be codified.

SECTION 11. EFFECTIVE DATE.

This Ordinance shall take effect upon the adoption of this Ordinance by the Commission of the City of Opa-Locka is subject to the approval of the Governor or Governor's Designee.

PASSED FIRST READING this 8th day of December 2021.

PASSED SECOND READING this 12th day of January 2022.

Veronica J. Williams, Mayor

ATTEST:

Joanna Flores, City Clerk

APPROVED AS TO FORM AND LEGAL SUFFICIENCY:

Burnadette Norris-Weeks, P.A.
City Attorney

Moved by: Commissioner Dominguez

Seconded by: Vice Mayor Taylor

VOTE:	**5-0**
Commissioner Bass	YES
Commissioner Davis	YES
Commissioner Dominguez	YES
Vice Mayor Taylor	YES
Mayor Williams	YES

CITY OF OPA-LOCKA, FLORIDA
NOTICE TO THE PUBLIC

NOTICE IS HEREBY GIVEN that the City Commission of the City of Opa-locka, Florida will hold public hearings at the Regular Commission Meeting on **Wednesday, January 12, 2022 at 7:00 p.m.,** at Sherbondy Village Auditorium, 215 Perviz Avenue, Opa-locka, Florida, to consider the following items for final adoption:

SECOND READING ORDINANCES/PUBLIC HEARING:

AN ORDINANCE OF THE CITY COMMISSION OF THE CITY OF OPA-LOCKA, FLORIDA, AMENDING THE ANNUAL ADOPTED GENERAL, PROPRIETARY AND SPECIAL REVENUE FUNDS BUDGETS FOR THE FISCAL YEAR COMMENCING OCTOBER 1, 2021 AND ENDING SEPTEMBER 30, 2022, ADJUSTING REVENUES AND EXPENDITURES AS REFLECTED IN EXHIBIT "A"; PROVIDING FOR THE EXPENDITURE OF FUNDS ESTABLISHED BY THE BUDGET; AUTHORIZING THE CITY MANAGER TO TAKE CERTAIN ACTIONS; PROVIDING FOR APPROPRIATION OF ALL BUDGETS AND EXPENDITURES; PROVIDING FOR FEES CONSISTENT WITH APPROPRIATIONS AND AMENDMENT; PROVIDING FOR INCORPORATION OF RECITALS; PROVIDING FOR CONFLICT AND REPEALER; PROVIDING FOR SEVERABILITY; PROVIDING FOR AN EFFECTIVE DATE (first reading / public hearing held on December 8, 2021).

AN ORDINANCE OF THE CITY COMMISSION OF THE CITY OF OPA-LOCKA, FLORIDA AMENDING CHAPTER 2, ARTICLE XI, DIVISION 13 OF THE CITY'S CODE OF ORDINANCES ENTITLED "HISTORIC ENVIRONMENTAL PRESERVATION BOARD" TO ESTABLISH MINIMUM STANDARDS FOR MUNICIPAL HISTORIC PRESERVATION PROGRAMS AS SET FORTH IN THE MIAMI-DADE COUNTY HISTORIC PRESERVATION ORDINANCE SECTION 16A-3.1; PROVIDING FOR BOARD ORGANIZATION AND QUALIFICATIONS; BOARD DUTIES AND RESPONSIBILITIES; SCOPE OF REGULATIONS; DEFINITIONS; ADMINISTRATION AND ENFORCEMENT RULES AND REGULATIONS; SITE/DISTRICT/ZONE DESIGNATION PROCESS AND PROCEDURES; DEMOLITION PROCESS AND PROCEDURES; PROCEDURES FOR MAINTENANCE OF DESIGNATED PROPERTIES; CERTIFICATE TO DIG PROCEDURES; AN APPEALS PROCESS; PENALTIES AND INCENTIVES; PROVIDING FOR SEVERABILITY; PROVIDING FOR CONFLICT AND REPEALER; RESCINDING ALL RESOLUTIONS IN CONFLICT; PROVIDING FOR AN EFFECTIVE DATE (first reading / public hearing held on December 8, 2021).

AN ORDINANCE OF THE CITY COMMISSION OF THE CITY OF OPA-LOCKA, FLORIDA, AUTHORIZING THE DISSOLUTION OF A SAFE NEIGHBORHOOD IMPROVEMENT DISTRICT (SPECIAL DISTRICT) IN ACCORDANCE WITH CHAPTER 189.071 FLORIDA STATUTES, AND REPEALING ORDINANCE 88-03 AND ORDINANCE 88-04, FOR THE ALI-BABA NEIGHBORHOOD IMPROVEMENT DISTRICT WITHIN AN AREA CONTAINING APPROXIMATELY 45 ACRES, BOUNDED ON THE EAST BY N.W. 17TH AVENUE, ON THE WEST BY N.W. 22ND AVENUE, ON THE NORTH BY N.W. 151ST STREET, AND ON THE SOUTH BY N.W. ALI BABA AVENUE; PROVIDING FOR CONFLICT AND REPEALER; PROVIDING FOR SEVERABILITY; PROVIDING FOR AN EFFECTIVE DATE (first reading / public hearing held on December 8, 2021).

AN ORDINANCE OF THE CITY COMMISSION OF THE CITY OF OPA-LOCKA, FLORIDA, AUTHORIZING THE DISSOLUTION OF A SAFE NEIGHBORHOOD IMPROVEMENT DISTRICT (SPECIAL DISTRICT) IN ACCORDANCE WITH CHAPTER 189.071 FLORIDA STATUTES, AND REPEALING ORDINANCE 88-03 AND ORDINANCE 88-11, FOR THE EAST-WEST SAFE NEIGHBORHOOD DISTRICT WITHIN AN AREA CONTAINING APPROXIMATELY 100 ACRES, BOUNDED ON THE EAST BY N.W. 17TH AVENUE, ON THE WEST BY N.W. 22ND AVENUE, ON THE NORTH BY N.W. 141ST STREET, AND ON THE SOUTH BY N.W. 135TH STREET; PROVIDING FOR CONFLICT AND REPEALER; PROVIDING FOR SEVERABILITY; PROVIDING FOR AN EFFECTIVE DATE (first reading / public hearing held on December 8, 2021).

AN ORDINANCE OF THE CITY COMMISSION OF THE CITY OF OPA-LOCKA, FLORIDA, AUTHORIZING THE DISSOLUTION OF A SAFE NEIGHBORHOOD IMPROVEMENT DISTRICT (SPECIAL DISTRICT) IN ACCORDANCE WITH CHAPTER 189.071 FLORIDA STATUTES, AND REPEALING ORDINANCE 88-03 AND ORDINANCE 88-05, FOR THE NILE GARDENS NEIGHBORHOOD IMPROVEMENT DISTRICT WITHIN AN AREA CONTAINING APPROXIMATELY 320 ACRES, BOUNDED ON THE EAST BY N.W. 27TH AVENUE, ON THE WEST BY ALEXANDRIA DRIVE, ON THE NORTH BY N.W. 135TH STREET, AND ON THE SOUTH BY N.W. 128TH STREET; PROVIDING FOR CONFLICT AND REPEALER; PROVIDING FOR SEVERABILITY; PROVIDING FOR AN EFFECTIVE DATE (first reading / public hearing held on December 8, 2021).

AN ORDINANCE OF THE CITY COMMISSION OF THE CITY OF OPA-LOCKA, FLORIDA, AMENDING ORDINANCE 15-31 LAND DEVELOPMENT REGULATIONS TO INCLUDE THE MOORISH REVIVAL STYLE DESIGN HANDBOOK; PROVIDING FOR DEFINITIONS, PERMIT AND SEVERABILITY; CODIFICATION; AND AN EFFECTIVE DATE (first reading / public hearing held on December 8, 2021).

AN ORDINANCE OF THE CITY COMMISSION OF THE CITY OF OPA-LOCKA, FLORIDA, AMENDING ORDINANCE 15-31 LAND DEVELOPMENT REGULATIONS TO INCLUDE ARTICLE IV, SECTION 22-101, CREATING THE HISTORIC DOWNTOWN OPA-LOCKA DISTRICT PROVIDING FOR DEFINITIONS, PROVIDING FOR PERMITTED AND PROHIBITED USES; PROVIDING FOR DEVELOPMENT CRITERIA; PROVIDING FOR SPECIAL PERMIT REQUIREMENTS; PROVIDING FOR CODIFICATION; PROVIDING FOR SEVERABILITY AND PROVIDING AN EFFECTIVE DATE (first reading / public hearing held on December 8, 2021).

AN ORDINANCE OF THE CITY COMMISSION OF THE CITY OF OPA-LOCKA, FLORIDA, AMENDING ORDINANCE 15-31 LAND DEVELOPMENT REGULATIONS TO INCLUDE ARTICLE IV, SECTION 22-102, CREATING THE OPA-LOCKA INNOVATION DISTRICT, PROVIDING FOR DEFINITIONS, PROVIDING FOR PERMITTED AND PROHIBITED USES, PROVIDING FOR DEVELOPMENT REGULATIONS AND INCENTIVES; PROVIDING FOR SEVERABILITY; PROVIDING FOR CODIFICATION; AND PROVIDING AN EFFECTIVE DATE (first reading / public hearing held on December 8, 2021).

RESOLUTIONS/PUBLIC HEARINGS:

A RESOLUTION OF THE CITY COMMISSION OF THE CITY OF OPA-LOCKA, FLORIDA APPROVING THE VARIANCE REQUEST FOR THE CONSTRUCTION AND OPERATION OF AN INDUSTRIAL WAREHOUSE / DISTRIBUTION & OFFICE SPACE DEVELOPMENT BUILDING LOCATED AT 12805 LE JEUNE ROAD AND IDENTIFIED BY FOLIO 08-2129-000-0061 IN THE I-3 ZONING DISTRICT; PROVIDING FOR INCORPORATION OF RECITALS; PROVIDING FOR AN EFFECTIVE DATE.

A RESOLUTION OF THE CITY COMMISSION OF THE CITY OF OPA-LOCKA, FLORIDA APPROVING THE FINAL SITE PLAN REVIEW REQUEST FOR THE CONSTRUCTION AND OPERATION OF AN INDUSTRIAL WAREHOUSE / DISTRIBUTION & OFFICE SPACE DEVELOPMENT BUILDING LOCATED AT 12805 LE JEUNE ROAD AND IDENTIFIED BY FOLIO 08-2129-000-0061 IN THE I-3 ZONING DISTRICT; PROVIDING FOR INCORPORATION OF RECITALS; PROVIDING FOR AN EFFECTIVE DATE.

A RESOLUTION OF THE CITY COMMISSION OF THE CITY OF OPA-LOCKA, FLORIDA APPROVING THE DEVELOPMENT AGREEMENT REVIEW FOR THE CONSTRUCTION AND OPERATION OF AN INDUSTRIAL WAREHOUSE / DISTRIBUTION & OFFICE SPACE DEVELOPMENT BUILDING LOCATED AT 12805 LE JEUNE ROAD AND IDENTIFIED BY FOLIO 08-2129-000-0061 IN THE I-3 ZONING DISTRICT; PROVIDING FOR INCORPORATION OF RECITALS; PROVIDING FOR AN EFFECTIVE DATE.

All interested persons are encouraged to participate and will be heard with respect to the public hearings.

Additional information on the above item may be obtained by contacting the Office of the City Clerk by telephone 305-953-2800 or email jflores@opalockafl.gov. To participate or provide comments virtually, please register on the City of Opa-locka website at www.opalockafl.gov no later than 7:00 p.m. on Wednesday, January 12, 2022.

In accordance with the Americans with Disabilities Act of 1990, persons needing special accommodations to participate in the proceeding should contact the Office of the City Clerk at (305) 953-2800 for assistance not later than five (5) days prior to the proceeding. If hearing impaired, you may telephone the Florida Relay Service at (800) 955-8771 (TTY), (800) 955-8770 (Voice), (877) 955-8773 (Spanish) or (877) 955-8707 (Creole).

PURSUANT TO FS 286.0105: *Anyone who desires to appeal any decision made by any board, agency, or commission with respect to any matter considered at such meeting or hearing will need a record of the proceedings, and for that reason, may need to ensure that a verbatim record of the proceedings is made, which record includes the testimony and evidence upon which the appeal may be based.*

Joanna Flores, CMC
City Clerk
City of Opa-locka

CITY OF OPA-LOCKA
Community Development & Planning Dept.
Date Rec'd 10/18/24
Signature: ®

CITY OF Opa-locka
BUILDING DEPARTMENT
780 Fisherman St
Opa-locka, FL 33054
Office: 305-953-2868
www.opalockafl.gov

Date: 10/16/24 Clerk: YV

☐ Master Permit 24090014

JOB ADDRESS 1301 Sharon Ave.

PERMIT APPLICATION

☒ Sub-Permit 24100037

1. OWNER INFORMATION
Owner Pm 2 Construction
Address 1301 Sharon
City Opa locka, ST Fl Zip
Driver License No. /I.D. H240-540-85041-0
Phone No. 786-304-5035

2. CONTRACTOR INFORMATION
Company Name Timuti Construction
Qualifier Name Behdad Termwighech
Address 11042 NW 18 Ave.
City Plantation ST Zip 33322
Lic. No. CBC 1527063 Phone No. 908-6423984

3. PERMIT TYPE (Choose only One)
☑ Building
☐ Electrical
☐ Mechanical
☐ Plumbing/Gas
☐ Sign
☐ Roofing

4. CHANGE TO AN EXISTING PERMIT (Choose only One)
☐ Change Contractor
☐ Extension
☐ Renewal
☐ Shop Drawing
☐ Lost Plans

5. TYPE OF IMPROVEMENT (Choose only One)
☐ New Construction ☐ Re-roof ☐ Pool
☐ Addition Attached ☐ Driveway ☐ Shed
☐ Alteration Interior ☐ Fence ☐ Other:
☐ Alteration Exterior ☑ Window
☐ Repair/Replace ☑ Door
☐ Demolition/Partial ☐ Shutters

6. ARCHITECT/ ENGINEER INFO
Name Cale engineer
Address 2000 NW 89 Place, #102
City Doral, ST Zip Code
Lic. No. 82038 Discipline
Phone No. 305-898-9995,

7. CONTACT
Name Aylin Cachon
E-mail kcompletehomeservices@gmail.com
Phone No. 786-304-5035

8. LEGAL/USE/WORK VALUE
Folio No. 08- 2121002072 0 No. of Units
Lot Block Subdivision
Current Use of Property Residential
Description of Work New windows & Door.
Square FT. 1284 Linear FT.
Work Value $2000.00. Building Value
Flood Zone Base Flood Elevation

Application is hereby made to obtain a permit to do the work and/or installations as indicated. I certify that no work or installation has commenced prior to the issuance of a permit and that all work will be performed to meet the standards of all laws regulating construction in this jurisdiction. I understand that a separate permit must be secured for Electrical, Plumbing, Signs, Wells, Pools, Furnaces, Boilers, Heaters, Tanks, Air Conditioning, Driveways, Portable Storage Units, etc.
Owner's Affidavit: I certify that all the foregoing information is accurate, and that work will be done in compliance with all applicable laws regulating construction and zoning.

NOTICE REGARDING BUILDING PERMIT APPLICATIONS

The Completion and submission of a Building Permit Application is a requirement of securing a City Building Permit. The City will rely upon the information contained in the Application in determining whether a City Building Permit should be issued. The submission of inaccurate, misleading, or misrepresented information in the Application shall subject the Building Permit to denial, suspension or revocation, and the individual applying for the permit, to all appropriate fines, penalties and other punishments authorized by law. KINDLY GOVERN YOURSELF ACCORDINGLY.
WARNING TO OWNER: YOUR FAILURE TO RECORD A NOTICE OF COMMENCMENT MAY RESULT IN YOU PAYING TWICE FOR IMPROVMENTS TO YOUR PROPERTY. IF YOU INTEND TO OBTAIN FINANCING, CONSULT WITH YOUR LENDER OR AN ATTORNEY BEFORE RECORDING YOUR NOTICE OF COMMENCEMENT.

OWNER INFORMATION
Masood Hajali — PRINT NAME
OWNERS SIGNATURE
SWORN TO AND SUBSCRIBED BEFORE ME BY (PRINT OWNER NAME)
Masood Hajali
BY MEANS OF PHYSICAL PRESENCE NOTARIZATION AND PRODUCED
AYLIN CACHON MY COMMISSION EXPIRES DEC 11, 2026 #HH334554 Bonded through 1st State Insurance NOTARY PUBLIC, STATE OF FLORIDA
IS PERSONALLY KNOWN.
As identified on this 15 day of Oct 20 24
Notary's Signatures
Printed Name of Notary

QUALIFIER INFORMATION
Behdad — PRINT NAME
OWNERS SIGNATURE
SWORN TO AND SUBSCRIBED BEFORE ME BY (PRINT QUALIFIER NAME)
Behdad
BY MEANS OF PHYSICAL PRESENCE NOTARIZATION AND PRODUCED
AYLIN CACHON MY COMMISSION EXPIRES DEC 11, 2026 #HH334554 Bonded through 1st State Insurance NOTARY PUBLIC, STATE OF FLORIDA
IS PERSONALLY KNOWN.
As identified on this 15 day of Oct 20 24
Notary's Signatures
Printed Name of Notary

DO NOT WRITE BELOW – FOR OFFICE USE ONLY

✓	TRADE	APPROVED/DATE	DISAPPROVED/DATE	APPLICATION INCLUDES	FEES $	.00
	Zoning			Zoning		
	Structural			Structural		
	Building			Base Fee		
	Electrical			Scanning		
	Mechanical			Technology		
	Plumbing			Rework		
	Roofing			Violation		
	Flood			DBPR/DCA		
	Publics Works			Code Compliance		
				(-) Upfront Fee		
				Balance Due		

OFFICE OF THE PROPERTY APPRAISER

Summary Report

Generated On: 10/16/2024

PROPERTY INFORMATION

Folio	08-2121-002-0720
Property Address	1301 SHARAR AVE OPA-LOCKA, FL 33054-3345
Owner	PM2 CONSTRUCTION LLC
Mailing Address	6505 SW 131 ST MIAMI, FL 33146
Primary Zone	0100 SINGLE FAMILY - GENERAL
Primary Land Use	0101 RESIDENTIAL - SINGLE FAMILY : 1 UNIT
Beds / Baths /Half	3 / 2 / 0
Floors	1
Living Units	1
Actual Area	1,284 Sq.Ft
Living Area	1,284 Sq.Ft
Adjusted Area	1,184 Sq.Ft
Lot Size	8,241 Sq.Ft
Year Built	1925

ASSESSMENT INFORMATION

Year	2024	2023	2022
Land Value	$196,762	$137,734	$110,187
Building Value	$115,795	$115,795	$115,795
Extra Feature Value	$3,892	$3,912	$3,931
Market Value	$316,449	$257,441	$229,913
Assessed Value	$316,449	$195,779	$177,981

BENEFITS INFORMATION

Benefit	Type	2024	2023	2022
Non-Homestead Cap	Assessment Reduction		$61,662	$51,932

Note: Not all benefits are applicable to all Taxable Values (i.e. County, School Board, City, Regional).

SHORT LEGAL DESCRIPTION

21 52 41
PL NO 1 OPA LOCKA PB 25-44
W1/2 OF LOT 23 & LOT 24 BLK 4
LOT SIZE 67.000 X 123
OR 19062-1158 0400 1

TAXABLE VALUE INFORMATION

Year	2024	2023	2022
COUNTY			
Exemption Value	$0	$0	$0
Taxable Value	$316,449	$195,779	$177,981
SCHOOL BOARD			
Exemption Value	$0	$0	$0
Taxable Value	$316,449	$257,441	$229,913
CITY			
Exemption Value	$0	$0	$0
Taxable Value	$316,449	$195,779	$177,981
REGIONAL			
Exemption Value	$0	$0	$0
Taxable Value	$316,449	$195,779	$177,981

SALES INFORMATION

Previous Sale	Price	OR Book-Page	Qualification Description
06/13/2024	$275,000	34330-1392	Qual by exam of deed
06/12/2023	$100	33776-2443	Corrective, tax or QCD; min consideration
10/24/2018	$94,600	31199-0150	Federal, state or local government agency
04/01/2000	$75,000	19062-1158	Sales which are qualified

The Office of the Property Appraiser is continually editing and updating the tax roll. This website may not reflect the most current information on record. The Property Appraiser and Miami-Dade County assumes no liability, see full disclaimer and User Agreement at http://www.miamidade.gov/info/disclaimer.asp

Detail by Entity Name

Florida Limited Liability Company
PM2 CONSTRUCTION LLC

Filing Information

Document Number	L15000206313
FEI/EIN Number	81-0859853
Date Filed	12/10/2015
Effective Date	12/10/2015
State	FL
Status	ACTIVE
Last Event	REINSTATEMENT
Event Date Filed	10/04/2016

Principal Address

6505 sw 131 st
MIAMI, FL 33156

Changed: 02/09/2024

Mailing Address

6505 SW 131 ST
PINECREST, FL 33156

Changed: 02/09/2024

Registered Agent Name & Address

HAJALI, M, DR.
6505 SW 131 ST
PINECREST, FL 33156

Name Changed: 01/20/2019

Address Changed: 02/09/2024

Authorized Person(s) Detail

Name & Address

Title Owner

HAJALI, MASOOD
6505 SW 131 ST
PINECREST, FL 33156

Annual Reports

Report Year	Filed Date
2022	01/30/2022
2023	04/10/2023
2024	02/09/2024

Document Images

02/09/2024 -- ANNUAL REPORT	View image in PDF format
04/10/2023 -- ANNUAL REPORT	View image in PDF format
01/30/2022 -- ANNUAL REPORT	View image in PDF format
01/08/2021 -- ANNUAL REPORT	View image in PDF format
01/18/2020 -- ANNUAL REPORT	View image in PDF format
01/20/2019 -- ANNUAL REPORT	View image in PDF format
01/18/2018 -- ANNUAL REPORT	View image in PDF format
02/17/2017 -- ANNUAL REPORT	View image in PDF format
10/04/2016 -- REINSTATEMENT	View image in PDF format
12/10/2015 -- Florida Limited Liability	View image in PDF format

1301 Sharar Avenue

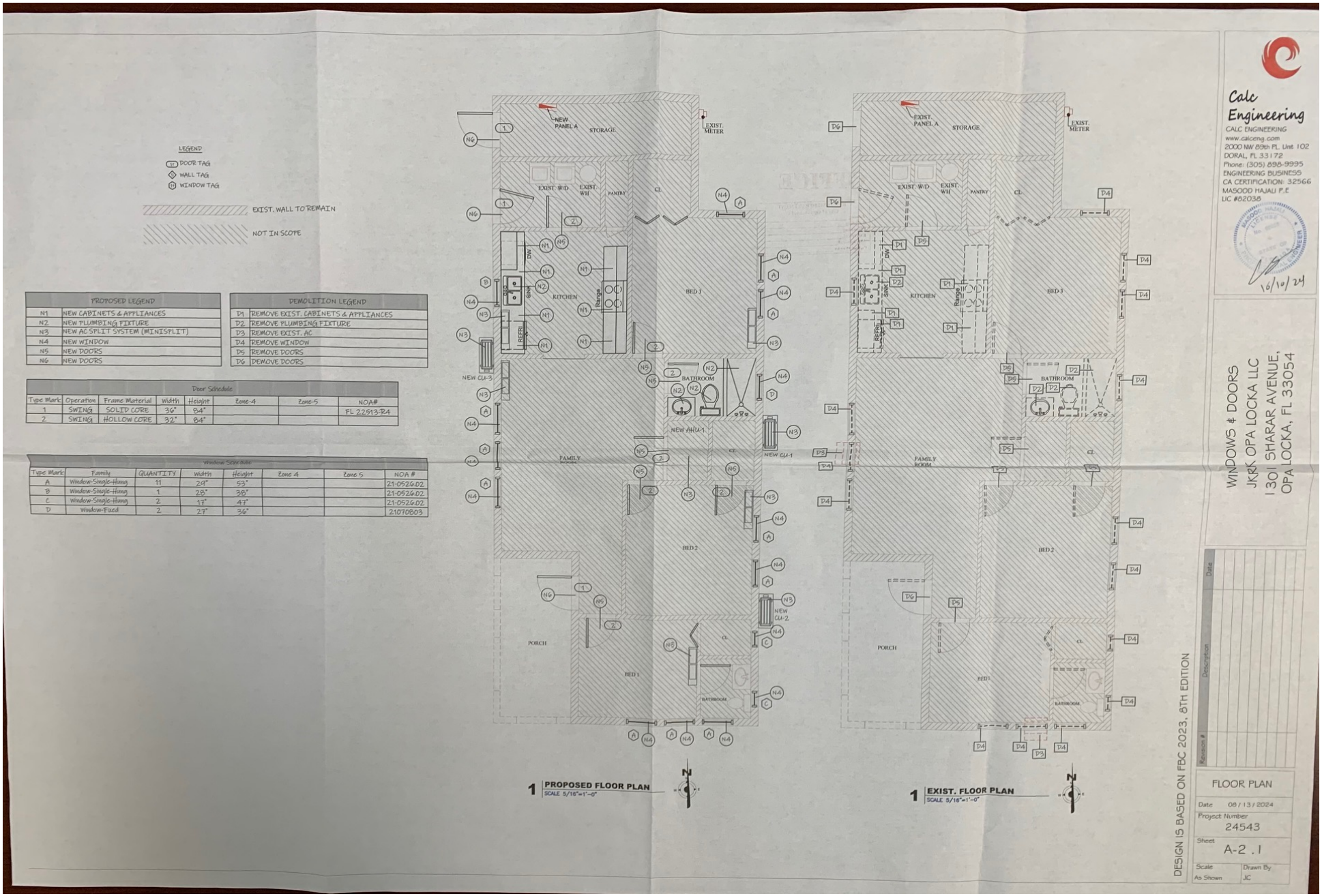

1st Reading/Public Hearing:
2nd Reading/Public Hearing:
Adopted:
Effective Date:
Sponsored By: Interim City Manager

ORDINANCE NO. _____

AN ORDINANCE OF THE CITY COMMISSION OF THE CITY OF OPA-LOCKA, FLORIDA, AUTHORIZING THE INTERIM CITY MANAGER TO EXECUTE A LEASE AGREEMENT WITH SFSE LLC d/b/a SOUTH FLORIDA SCHOOL OF EXCELLENCE TO OCCUPY RENTAL SPACE AT 780 FISHERMAN STREET; PROVIDING FOR ADOPTION OF REPRESENTATIONS; PROVIDING FOR CONFLICT AND REPEALER; PROVIDING FOR SEVERABILITY; PROVIDING FOR SCRIVERNER'S ERRORS; CONFLICTS OF LAW, SEVERABILITY; AND PROVIDING FOR AN EFFECTIVE DATE.

WHEREAS, pursuant to Ordinance No. 2022-15, the City of Opa-Locka ("City") entered into an agreement with SFSE d/b/a South Florida School of Excellence ("Tenant") to occupy space within the Municipal Complex; and

WHEREAS, the South Florida School of Excellence currently utilizes the second-floor space to operate an educational facility that offers services for special education, gifted and autistic students; and

WHEREAS, the most recent agreement term commenced on October 1,2022 and terminated on September 30, 2024. The school has remained in its rental space on a month-to-month arrangement; and

WHEREAS, SFSE desires to continue its current lease of the space at 780 Fisherman Street, specifically Suites 210, 220, and 250; and

WHEREAS, it is the desire of the City Commission to execute a lease agreement for an additional two-year period; and

WHEREAS, the new term is for a two (2) year period with a monthly base rent of Three Hundred Seven Thousand Twenty-Three Dollars and Ninety Four Cents ($307,023.94) for the first year and Three Hundred Fifteen Thousand Four Hundred Eighty-Four Dollars and Sixty Six Cents ($315,484.66) for the second year; and

WHEREAS, Tenant shall also be responsible for a Proportionate Share of 4.72% of space in calculating the monthly rent; and

WHEREAS, the City desires to enter into a Lease Agreement with SFSE for a portion of the property located at 780 Fisherman Street, in the City of Opa-Locka, pursuant to the terms and conditions set forth in the Lease Agreement, attached hereto as Exhibit "A"; and

WHEREAS, the City Commission of the City of Opa-Locka has determined that entering into the Lease Agreement is in the best interest of the residents of the City.

NOW, THEREFORE, BE IT ORDAINED BY THE CITY COMMISSION OF THE CITY OF OPA-LOCKA, FLORIDA, AS FOLLOWS:

SECTION 1. RECITALS ADOPTED
The recitals to the preamble herein are incorporated by reference.

SECTION 2. AUTHORIZATION
The City Commission of the City of Opa-Locka hereby authorizes the Interim City Manager to execute a lease agreement, attached hereto as Exhibit "A", with SFSE LLC d/b/a South Florida School of Excellence for space located at 780 Fisherman Street, under the terms and conditions set forth in Exhibit "A" hereto.

SECTION 3. SCRIVENER'S ERRORS
Sections of this Ordinance may be renumbered or re-lettered and corrections of typographical errors which do not affect the intent may be authorized by the City Manager, or the City Manager's designee, following review by the City Attorney, without need of public hearing, by filing a corrected copy of same with the City Clerk.

SECTION 4. CONFLICT & REPEALER
All ordinances, parts of ordinances or code provisions in conflict herewith ordinance are hereby repealed.

SECTION 5. SEVERABILITY
If any provision of this Ordinance or the application thereof to any person or circumstance is held invalid, such invalidity shall not affect other provisions of the Code or applications of this Ordinance that can be given affect other provisions of the Code or applications of this Ordinance that can be given effect without the invalid provision or application, and to this end the provisions of this Ordinance are declared to be severable.

SECTION 6. EFFECTIVE DATE.
This Ordinance shall take effect upon the adoption of this Ordinance by the Commission of the City of Opa-Locka and upon a filing of a certified copy hereof with the Florida Department of State and is subject to the approval of the Governor or Governor's Designee.

PASSED and **ADOPTED** this _____ day of _____, 2024.

_____
John Taylor, Mayor

ATTEST:

_____
Joanna Flores, City Clerk

APPROVED AS TO FORM
AND LEGAL SUFFICIENCY:

_____
Burnadette Norris-Weeks, P.A.
City Attorney

Moved by: _____

Seconded by: _____

VOTE:

Commissioner Bass	_____
Commissioner Santiago	_____
Commissioner Ervin	_____
Vice Mayor Kelley	_____
Mayor Taylor	_____

City of Opa-locka
Agenda Cover Memo

Interim City Manager:	Sha'mecca Lawson			**CM Signature:**			
Commission Meeting Date:	*12.11.2024*		**Item Type:** *(Enter X in box)*	**Resolution**	**Ordinance**	**Other**	
					X		
Fiscal Impact: *(Enter X in box)*	**Yes**	**No**	**Ordinance Reading:** *(Enter X in box)*		**1st Reading**	**2nd Reading**	
	X		**Public Hearing:** *(Enter X in box)*		**Yes** / **No**	**Yes** / **No**	
						X	X
Funding Source: *Account#:*	*(Enter Fund & Dept)* Ex: See Financial Impact Section		**Advertising Requirement:** *(Enter X in box)*		**Yes**	**No**	
						X	
Contract/P.O. Required: *(Enter X in box)*	**Yes**	**No**	**RFP/RFQ/Bid#:**				
		X					
Strategic Plan Related *(Enter X in box)*	**Yes**	**No**	**Strategic Plan Priority Area:** **Enhance Organizational** ☐ **Bus. & Economic Dev** ■ **Public Safety** ☐ **Quality of Education** ☐ **Qual. of Life & City Image** ☐ **Communication** ☐		**Strategic Plan Obj./Strategy:** (*list the specific objective/strategy this item will address)*		
		X					
Sponsor Name	Interim City Manager		**Department:**		City Manager		

Short Title:

An ordinance of the City Commission of the City of Opa-locka authorizing the Interim City Manager to execute a lease renewal agreement with SFSE LLC dba South Florida School of Excellence for rental space located within the Municipal Complex for a period of two years.

Staff Summary:

Pursuant to Ordinance No. 2022-15, the City entered into an agreement with SFSE dba South Florida School of Excellence to occupy space within the Municipal Complex. The South Florida School of Excellence currently utilizes the second-floor space to operate an educational facility that offers services for special education,

gifted and autistic students. The most recent agreement term commenced on October 1,2022 and terminated on September 30,2024. It is the desire of the City Administration to renew this lease agreement for an additional two- year period.

Financial Impact – The lease will generate $307,024 in revenue for FY 2025 and $315,485 for FY 2026. These funds will assist in supporting the operations of the Town Center facility and are already included in the FY 2025 budget.

Proposed Action:

Staff recommends the City Commission authorize the Interim City Manager to execute this lease renewal agreement.

Attachment:

Draft Lease Agreement

Lease Agreement

SFSE LLC d/b/a/ South Florida School of Excellence

DATE OF LEASE COMMENCEMENT:

As of February 1, 2025

A.	**LANDLORD:**	City of Opa-locka 780 Fisherman Street Opa-locka, Florida 33054
B.	**TENANT:**	SFSE LLC d/b/a South Florida School of Excellence
C.	**ADDRESS OF LEASED PREMISES:**	780 Fisherman Street, Ste. 210, 220, and 250 Opa-locka, Florida 33054
D.	**LEASED PREMISES:**	17,375 rentable sq. ft.
E.	**LEASE DATE:**	February 1, 2025
F.	**LEASE TERM:**	Two (2) years
G.	**RENT:**	Suite 210 (6,511 sq. ft.) Base rent is $15.50 per sq. ft. The rent shall be $8,410.04 per month for year one ($100,920.48 per year). Base rent will be increased by 3% each year. Suite 220 (4,274 sq. ft.) Base rent is $15.50 per sq. ft. The rent shall be $5,520.58 per month for year one ($66,246.96 per year). Base rent will be increased by 3% each year. Suite 250 (6,590 sq. ft.) Base rent is $15.50 per sq. ft. The rent shall be $8,512.08 per month for year one ($102,144.96 per year). Base rent will be increased by 3% each year. Tenant is also responsible for paying their Proportionate Share which is 4.72% of the monthly rent.

H. COMMON AREA MAINTENANCE, TAXES AND INSURANCE:

Landlord will insure the building and will maintain in good repair the building and all common areas, including the parking areas, sidewalks and exterior landscaped areas. Commencing on February 1, 2025, Tenant will pay its prorate share of increases in Landlord's cost for real estate taxes, insurance, management fees, utilities and common area maintenance over a base year of 2024. Such charges shall be payable in equal monthly installments on the first day of each month and will be adjusted annually, such adjustment to be effective as of February 1 of each year. Tenant shall pay for all electricity used at the premises, which shall be separately metered in Tenant's name.

I. PARKING:

Landlord shall provide sufficient parking for Tenant's intended use.

J. LANDLORD SERVICES DURING THE TERM:

Landlord shall perform the following during the Term.

- Cleaning and janitorial services will be provided in the common areas of the building.
- Maintenance and repair of the exterior of the Building and the Building grounds, including shrubbery and the parking lot area.
- Security service for the Building.

K. REPAIRS:

Except as otherwise provided in Article 7, Landlord shall make such repairs to the roof, exterior walls, floor slabs and common facilities of the Building as may be necessary to keep them in serviceable condition.

LEASE AGREEMENT

DATE OF LEASE EXECUTION:
As of February 1, 2025

ARTICLE 1
REFERENCE DATA

1.1 SUBJECTS REFERRED TO: Each reference in this Lease to any of the following terms shall incorporate the data stated for that subject in this Section

1.1.1 LANDLORD: City of Opa-locka

1.1.2 MANAGING AGENT: City of Opa-locka,780 Fisherman Street, Opa-locka, Florida 33054

1.1.3 TENANT: SFSE LLC d/b/a South Florida School of Excellence

1.1.4 TENANT'S ADDRESS (FOR NOTICE & BILLING): The Premises

1.1.5 LOT: The parcel of land at 780 Fisherman Street, Opa-locka, Florida 33054, on which the Building is located

1.1.6 TENANT'S SPACE: Suites 210, 220, and 250 located on the second floor of the building, as shown on the floor plan attached hereto as Exhibit A

1.1.7 RENTABLE FLOOR AREA OF TENANT'S SPACE: Approximately 17,375 square feet

1.1.8 TENANT'S PROPORTIONATE SHARE: 4.72%

1.1.9 TENANT: The Tenant will be responsible for paying property taxes on its condominium units to the City in the amount not to exceed $25,000.

1.1.10 EFFECTIVE DATE: The date of lease execution set forth on the first page hereof.

1.1.11 TERM COMMENCEMENT DATE: February 1, 2025

TERM EXPIRATION DATE: January 31, 2027

1.1.12 ANNUAL AND MONTHLY BASE RENT INSTALLMENTS: Base rent and Proportionate Share is due on the first day of each month.

1.1.13 PERMITTED USE: School

1.1.14 BROKERS: None

1.2 EXHIBITS AND SCHEDULES: The exhibits and schedules listed below in this Section are incorporated in this Lease by reference and are to be constructed as part of this Lease.

EXHIBIT A: Floor Plan of Premises

EXHIBIT B: Rules and Regulations

Upon the signatures of the authorized agents, the parties hereby acknowledge:

1. The Lease shall allow the school to operate on the 2nd floor of the building located at 780 Fisherman Street, Opa-locka, FL 33054. The rentable floor area will be 17,375 sq. ft.

2. The Lease shall extend the term of the lease from October 1, 2022 - September 30, 2024, to February 1, 2025 – January 31,2027.

3. Effective February 1, 2025, the monthly rent shall be $22,442.70, which is $15.50 per sq. ft. Tenant is also responsible for paying its Proportionate Share which is 4.72% ($1,059.29) per month.

ARTICLE 2

PREMISES AND TERM

2.1 PREMISES: Subject to and with the benefit of the provisions of this Lease, Landlord leases to Tenant, and Tenant leases from Landlord, Tenant's Space in the Building located on the Lot, excluding exterior faces of exterior walls, the common facilities and building service fixtures and equipment serving exclusively or in common other parts of the Building. Tenant's Space, with such exclusions, is referred to in this instrument as the **"Premises".** The Lot and the Building are sometimes referred to in this instrument as the **"Property".**

2.1.1 Tenant shall have, as appurtenant to the Premises, the right to use in common with others entitled thereto, subject to reasonable rules of general applicability to tenants of the Building from time to time made by Landlord of which Tenant is given notice, common facilities included in the Building or on the Lot, including use of the parking areas, as set forth below to the extent from time to time designated by Landlord and the Building and service fixtures and equipment serving the Premises.

2.1.2 Tenant shall have use of the parking areas provided for the common use of all tenants and their guests, subject to rules and regulations which may be promulgated by Landlord from time to time.

2.1.3 Landlord reserves the right from time to time, without unreasonable interference with Tenant's use, (a) to install, repair, remove, use, maintain and relocate for service to the Premises and to other parts of the Building or either building, service fixtures and equipment wherever located in, the Building and (b) to alter or relocate any other common facility, including the parking areas, provided that substitutions are substantially equivalent or better.

2.1.4 TERM: To have and to hold for the term beginning on the Commencement Date and ending on the Expiration Date (the **"Term"),** unless sooner terminated as provided herein below, in Section 7.1 or in Article 9. See Section 4.1 below relative to the Rent Commencement Date.

ARTICLE 3

CONSTRUCTION

3.1 DELIVERY OF PREMISES: Landlord shall deliver the Premises to Tenant with the Premises finished as described in Schedule 3.1.

3.2 ACCESS: Landlord shall permit Tenant access for installing equipment and furnishings in the Premises prior to the Commencement Date when it can be done without material interference with remaining work. Such access shall be subject to the provisions of this Lease, except for payment of Base Rent. Tenant shall indemnify and save Landlord harmless from and against any and all loss, liability, damage, cost and expense, including without limitation attorneys' fees and costs, claimed for or actually arising from, growing out of or related to any act, negligence or failure to act of Tenant or anyone entering the Premises or Building with Tenant's permission. Provided, however, this indemnification shall only be to the extent and within the limitations of Section 768.28 Florida Statutes, subject to the provisions of that statute whereby the Tenant shall not be held liable to pay a personal injury or property damage claim or judgment by any one person which exceeds the sum of $200,000, or any claim or judgment or portions thereof, which, when totaled with all other claims or judgments paid by the Tenant arising out of the same incident or occurrence, exceed the sum of $300,000 from any and all personal injury or property damage claims, liabilities, losses or causes of action which may arise as a result of the negligence of the Tenant or the Tenant's officers, employees, servants, agents, partners, principals or subcontractors. The provisions of this Section shall survive the termination of this Lease.

3.3 GENERAL PROVISIONS APPLICABLE TO CONSTRUCTION: All construction work required or permitted by this Lease, whether by Landlord or by Tenant, shall be done in a good and workmanlike manner and in compliance with all applicable laws and all lawful ordinances, regulations and orders of governmental authority and insurers of the Building. Either party may inspect the work of the other at reasonable times and shall promptly give notice of observed defects. Landlord shall have no further obligation to fund or complete construction work once the Landlord’s obligations contained in Section 3.1 have been fulfilled.

3.4 TENANT ALTERATIONS: Tenant shall not make any changes or alterations

to the Premises without Landlord's prior written consent; and shall not in any event make unauthorized structural changes or additions to the Building or Premises or changes or additions to the heating, ventilating and air conditioning or other systems of the Building, consent to which may be withheld by Landlord in its sole discretion. Landlord may require Tenant to provide demolition and/or lien and completion bonds in form and amount satisfactory to Landlord. All Tenant alterations shall be accomplished in a good and workmanlike manner at Tenant's sole expense, in conformity will all Applicable Laws, by a licensed and bonded contractor approved in advance by Landlord, such approval not to be unreasonably withheld or delayed. Upon completion of any such work, Tenant shall provide Landlord with "as built" plans, copies of all construction contracts, and proof of payment for all labor and materials. Any Tenant alterations to the Premises made by or installed by either party hereto will remain upon and be surrendered with the Premises and become the property of Landlord upon the expiration or earlier termination of this Lease without credit to Tenant; provided, however, Landlord, at its option, may require Tenant to remove any additions and/or repair any alterations to restore the Premises to the condition existing at the time Tenant took possession, with all costs of removal or alterations to be borne by Tenant. This clause will not apply to moveable equipment, furniture or moveable trade fixtures owned by Tenant if (a) such equipment, furniture and trade fixtures are not then subject to any other rights, liens and interests of Landlord, or (b) Tenant is not then in default.

3.5 NO LIENS: Tenant shall pay promptly; when due, the entire cost of any work done on the Premises by Tenant, its agent, employees or independent contractors. Tenant shall have no authority or power, express or implied, to create or cause any construction lien or mechanics' or materialmen's lien or claim of any kind against the Premises, the Property or any portion thereof. Tenant will promptly cause any such liens or claims to be released by payment, bonding or otherwise within thirty (30) days after request by Landlord, and will indemnify Landlord against losses arising out of any such claim including, without limitation, legal fees and court costs. NOTICE IS HEREBY GIVEN THAT LANDLORD WILL NOT BE LIABLE FOR ANY LABOR, SERVICES OR MATERIAL FURNISHED OR TO BE FURNISHED TO TENANT, OR TO ANY ONE HOLDING THE PREMISES THROUGH OR UNDER TENANT, AND THAT NO MECHANICS OR OTHER LIENS FOR ANY SUCH LABOR, SERVICES OR MATERIALS WILL ATTACH TO OR AFFECT THE INTEREST OF LANDLORD IN THE PREMISES. TENANT WILL DISCLOSE THE FOREGOING PROVISIONS TO ANY CONTRACTOR ENGAGED BY TENANT PROVIDING LABOR, SERVICES OR MATERIAL TO THE PREMISES.

ARTICLE 4

RENT

RENT: Tenant agrees to pay, without any offset or reduction whatsoever, to Landlord fixed rent and proportionate share on the first day of each calendar month of the Term, beginning on the first day of the first (1st) full calendar month of the Term. The Base Rent shall be applicable for the Term commencing on the Term Commencement Date (the **"Rent Commencement Date").** Tenant shall pay, with each payment of Rent, all sales and other applicable taxes which may be due or payable thereon.

4.1.1 The additional rent required to be paid by Tenant under this Section, together with the Base Rent and any other sums due Landlord under this Lease, is hereinafter collectively called the **"Rent".**

4.1.2 PAYMENTS: All payments of Rent shall be made to Managing Agent, or to such other person as Landlord may from time to time designate.

4.1.3 LATE CHARGES: If any Base Rent or other payment due under this Lease is not received by Landlord within ten (10) days of the due date of such payment, Tenant shall pay in addition to such payment a late charge equal to the greater of 5% of the payment which is past due or Two Hundred Fifty Dollars and No Cents ($250.00). If any payment due from Tenant shall remain overdue for more than ten (10) days, interest shall accrue daily on the past due amount from the date such amount was due until paid or judgment is entered at a rate equivalent to the lesser of eighteen percent (18%) per annum or the highest rate permitted by law. Interest on the past due amount shall be in addition to and not in lieu of the five percent (5%) or $250.00 late charge or any other remedy available to Landlord.

4.1.4 ELECTRICITY: Tenant shall pay for all electricity consumed in Tenant's Space. The consumption shall be measured by an independent meter installed specifically for the Premises. The meter shall be in the name of Tenant, who shall have sole responsibility for paying this expense directly to the utility company. The consumption of electricity for common areas will be paid for by Landlord and included in Operating Costs.

4.1.5 NET LEASE. This Lease shall be deemed and construed to be a "net lease" and Tenant shall pay to Landlord, absolutely net throughout the term of this Lease, the Base Rent, and other payments hereunder, free of any charges, assessments, impositions or deductions of any kind and without abatement deduction or set-off, other than as here in expressly provided for, and under no circumstances or conditions, whether now existing or hereafter arising, or whether beyond the present contemplation of the parties, shall Landlord be expected or required to make any payment of any kind whatsoever or be under any other obligation or liability hereunder except as herein otherwise expressly set forth.

ARTICLE 5

LANDLORD'S OBLIGATIONS

5.1 LANDLORD'S SERVICES DURING THE TERM: Landlord shall perform the following during the Term.

(a) Automatically operated passenger elevator service and water at those points of supply provided for general use of its tenants;

(b) Freight elevators on an "as available" basis for incidental use by Tenant; and

(c) Maintenance and repair of the exterior of the Building and Building grounds, including shrubbery and the parking lot area; and

(d) Security service for the Building.

5.1.2 Additional Building Services: Landlord shall furnish, solely at Landlord's election, through Landlord's employees or independent contractors, reasonable additional Building operation services upon reasonable advance request of Tenant at equitable rates from time to time established by Landlord to be paid by Tenant.

5.1.3 Repairs: Except as otherwise provided in Article 7, Landlord shall make such repairs to the roof, exterior walls, floor slabs and common facilities of the Building as maybe necessary to keep them in serviceable condition. It is agreed upon between Landlord and Tenant that the Landlord shall be responsible for the maintenance and upkeep of the outside of the Building and all repairs to the Leased Premises, including electrical, plumbing and air conditioning within the Building, unless damage caused by the negligence or fault of Tenant, its employees, agents or invitees, in which event Tenant shall be responsible for said costs, which Landlord may charge to Tenant as additional rent. If the Leased Premises become un-tenantable by reason of fire, windstorm or other events beyond the control of Tenant or Landlord, then during such period the rental provided herein shall cease and be abated and the Landlord shall have a reasonable time during which to make the required repairs, or in the event Landlord elects not to rebuild or repair the Leased Premises, then this Lease shall thereupon cease and be deemed terminated.

5.2 QUIET ENJOYMENT: Landlord has the right to make this Lease and Tenant, on paying the rent and performing its obligations hereunder, shall peacefully and quietly have, hold and enjoy the Premises throughout the Term without any manner of hindrance or molestation from Landlord or anyone claiming under Landlord, subject, however, to all the terms and provisions hereof. Landlord shall not be liable to Tenant, which shall have no recourse against Landlord, by reason of interference with quiet enjoyment caused by other tenants.

5.3 INTERRUPTIONS:

5.3.1 Landlord shall not be liable to Tenant for any compensation or reduction of Rent by reason of inconvenience or annoyance or for loss of business arising from power losses or shortages or from the necessity of Landlord's entering the Premises for any of the purposes in this Lease authorized, or for repairing the Premises or any portion of the Property. In case Landlord is prevented or delayed from making any repairs, alterations or improvements, or furnishing any service or performing any other covenant or duty to be performed on Landlord's part, by reason of any cause reasonably beyond Landlord's control, Landlord shall not be liable to Tenant therefor, nor shall Tenant be entitled to any abatement or reduction of rent by reason thereof, nor shall the same give rise to a claim in Tenant's favor that such failure constitutes actual or constructive, total or partial, eviction from the Premises.

5.3.2 Landlord reserves the right to stop any service or utility system when necessary, by reason of accident or emergency or until necessary repairs have been completed. Except in case of emergency repairs, Landlord will give Tenant reasonable advance notice of any contemplated stoppage and will use reasonable efforts to avoid unnecessary inconvenience to Tenant by reason thereof.

ARTICLE 6

TENANT'S COVENANTS

6.1 TENANT'S COVENANTS DURING THE TERM: Tenant covenants during the Term and such further time as Tenant occupies any part of the Premises, to do and perform the following matters.

6.1.1 Tenant's Payments: Tenant shall pay, when due, (a) all Base Rent and additional rent, (b) all taxes which may be imposed on Tenant's personal property in the Premises (including, without limitation, Tenant's fixtures and equipment) regardless to whomever assessed, (c) all sales taxes which may be imposed on the payment by Tenant of Base Rent and/or additional rent due hereunder, (d) all charges for telephone, electricity and other utility services (including service inspections therefor) rendered to the Premises and separately metered or billed to Tenant, and (e) as additional rent, all charges of Landlord rendered pursuant to Section 4.2 here of and any other sums due Landlord pursuant to this Lease.

6.1.2 Repairs and Yielding Up: Tenant shall keep the Premises in good order, repair and condition, reasonable wear only excepted; at the expiration or termination of this Lease, Tenant shall peaceably yield up the Premises and all changes and additions there in such order, repair and condition. Subject to the provisions of Section 3.5, Tenant shall remove all personal property of Tenant, and any items required to be removed by Landlord pursuant to Section 3.5 or otherwise, repairing all damage caused by such removal and restoring the Premises and leaving them clean and neat. Any property remaining on the Premises may, at Landlord's discretion, be removed, destroyed, sold, stored or otherwise disposed of at Tenant's cost.

6.1.3 Occupancy and Use: Tenant shall, continuously from the Commencement Date, use and occupy the Premises only for the Permitted Use, and shall not injure or deface the Premises or Property, and shall not permit in the Premises any auction, sale, nuisance or the emission from the Premises of any objectionable noise or odor, nor any use which is improper, offensive, contrary to law or ordinances, or liable to invalidate or increase the premiums for any insurance on the Building or its contents or liable to render necessary any alteration or addition to the Building, nor cause the violation of any laws, ordinances, building codes, rules or regulations, any order or judgment, permit or license, of any federal, state or local governmental or regulatory entity having jurisdiction over or application to the Property, including but not limited to the Board of Fire Underwriters and the Americans with Disabilities Act and all regulations and orders promulgated to such act (collectively, **"Applicable Laws");** Tenant warrants that all improvements or alterations of the Premises made by Tenant or Tenant's employees, agents or contractors, either prior to Tenant's occupancy of the Premises or at any time during the term of this Lease, will comply with all Applicable Laws. Tenant will procure at its own expense all permits and licenses required for the transaction of its business in the Premises.

6.1.4 Hazardous Materials: Throughout the Term, Tenant shall prevent the presence, use, generation, release, discharge, storage, disposal, or transportation of any Hazardous Materials (as hereinafter defined) on, under, in, above, to, or from the Premises other than in strict compliance with Applicable Laws. For purposes of this provision, the term **"Hazardous**

Materials" will mean and refer to any wastes, materials, or other substances of any kind or character that are or become regulated as hazardous or toxic waste or substances, or which require special handling or treatment, under any Applicable Laws. If Tenant's activities at the Premises or Tenant's use of the Premises (a) results in a release of Hazardous Materials that is not in compliance with Applicable Laws or permits issued thereunder; (b) gives rise to any claim or requires a response under common law or Applicable Laws or permits issued thereunder; (c) causes a significant public health effect; or (d) creates a nuisance, then Tenant shall, at its sole cost and expense: (i) immediately provide verbal notice thereof to Landlord as well as notice to Landlord in the manner required by this Lease, which notice shall identify the Hazardous Materials involved and the emergency procedures taken or to be taken; and (ii) promptly take all action in response to such situation required by Applicable Laws, provided that Tenant shall first obtain Landlord's approval of their mediation plan to be undertaken.

6.1.5 Rules and Regulations: Tenant shall comply with the Rules and Regulations set forth in Exhibit B and all other reasonable Rules and Regulations hereafter made by Landlord, of which Tenant shall have been notified, for the care and use of the Property.

6.1.6 Safety Appliances: Tenant shall keep the Premises equipped with all safety appliances required by law or ordinance or any other regulation of any public authority because of any use made by Tenant and to procure all licenses and permits so required and, if requested by Landlord, shall do any work so required because of such use, it being understood that the foregoing provisions shall not be construed to broaden in any way Tenant's Permitted Use.

6.1.7 Assignment and Subletting: Tenant shall not, without the prior written consent of Landlord, assign this lease, make any sublease or permit occupancy of the Premises or any part thereof by anyone other than Tenant, voluntarily or by operation of law (it being understood that Landlord shall not unreasonably withhold or delay its consent herein required). Tenant shall, as additional rent, reimburse Landlord promptly for reasonable legal and other expenses incurred by Landlord in connection with any request by Tenant for consent to assign or sublet. No consent by Landlord shall affect the continuing liability of Tenant (which, following assignment, shall be joint and several with the assignee), and no consent to any of the foregoing in a specific instance shall operate as a waiver in any subsequent instance. Any permitted assignee, subtenant or other occupant must deliver a written instrument to Landlord, in form and substance reasonably satisfactory to Landlord, by which such assignee, subtenant or other occupant agrees to be bound by and assume all obligations of Tenant under this Lease relating to the portion of the Premises acquired by such assignee, subtenant or other occupant. Any attempted assignment, subleasing or other occupancy not approved by Landlord as required by this Subsection 6.1.7 shall be void and a default under this Lease; any net income (after commercially reasonable brokerage fees and out of pocket costs of leasing) which is payable to Tenant in connection with such subleasing or assignment or occupancy, in excess of the sums due Landlord by Tenant under this Lease, shall be payable one-half to Landlord, and one-half may be retained by Tenant.

6.1.8 Loading: Tenant shall not place a load upon the Premises exceeding an average rate of fifty (50) pounds of live load per square foot of floor area, and shall not move any safe, vault or other heavy equipment in, about or out of the Premises, except in such manner and at such times as Landlord shall in each instance approve. Tenant's business machines and mechanical equipment which cause vibration or noise that may be transmitted to the Building

structure or to any other leased space in the Building shall be placed and maintained by Tenant in settings of cork, rubber, spring or other types of vibration eliminators sufficient to eliminate such vibration or noise.

6.1.9 Landlord's Costs: In case Landlord shall, without any fault on its part, be made party to any litigation commenced by or against Tenant or by or against any parties in possession of the Premises or any part thereof claiming under Tenant, Tenant shall pay, as additional rent, all costs including, without implied limitation, reasonable attorneys' fees incurred by or imposed upon Landlord in connection with such litigation and, as additional rent, shall also pay all such costs and fees incurred by Landlord for any obligations of Tenant under this Lease.

6.1.10 Tenant's Property: All the furnishings, fixtures, equipment, effects and property of every kind, nature and description of Tenant and of all persons claiming by, through or under Tenant which, during the continuance of this Lease or any occupancy of the Premises by Tenant or anyone claiming under Tenant, may be on the Premises or elsewhere in the Property shall be at the sole risk and hazard of Tenant, and if the whole or any part thereof shall be destroyed or damaged by fire, water or otherwise, or by leakage or bursting of water pipes, steam pipes, or other pipes, by theft or from any other cause, no part of said loss or damage is to be charged to or to be borne by Landlord unless located off the Premises and due to the willful act or gross negligence of Landlord.

6.1.11 Holdover: Tenant shall pay to Landlord twice the total of the Base Rent and additional rent then applicable for each month or portion thereof, in the event that Tenant shall retain possession of the Premises or any part thereof after the termination of this Lease, whether by lapse of time or otherwise, and shall also pay all damages sustained by Landlord on account thereof. The provisions of this Subsection shall not operate as a waiver by Landlord of any right of re-entry provided in this Lease, at the option of Landlord exercised by written notice given to Tenant while such holding over continues. Such holding over shall, at Landlord's option, exercised by written notice at any time during the holding over, constitute an extension of this Lease for a period of one (1) year.

ARTICLE 7

CASUALTY AND TAKING

7.1 CASUALTY AND TAKING: In case during the Term all or any substantial part of the Premises, the Building or Lot or any one or more of them, are damaged materially by fire or any other cause, this Lease shall terminate at Landlord's election, which may be made, notwithstanding that Landlord's entire interest may have been divested, by notice given to Tenant within sixty (60) days after the occurrence of the event giving rise to the election to terminate, which notice shall specify the effective date of termination which shall not be less than thirty (30) nor more than sixty (60) days after the date of the notice of such termination. In case during the Term all or any substantial part of the Premises shall be taken by eminent domain, then either Landlord or Tenant may within sixty (60) days after receipt of notice of such taking by notice in writing to the other terminate this Lease as of the date of actual physical taking of possession under such taking. If in any such case the Premises are rendered unfit for use and occupation and the Lease is not so terminated, Landlord shall use due diligence to put the Premises, or, in the case of taking, what may remain thereof (excluding any items installed or paid for by Tenant, which Tenant may be required or permitted to remove), into proper condition for use and occupation to the extent permitted by the next award of insurance or damages and

applicable laws then in effect and a just proportion of the Base Rent and additional rent according to the nature and extent of the injury shall be abated until the Premises or such remainder shall have been substantially completed by Landlord in such condition, and in case of taking which permanently reduces the area of the Premises, a just proportion of the Base Rent and additional rent shall be abated for the remainder of the Term and an appropriate adjustment shall be made to the annual estimated Operating Costs.

7.2 RESERVATION OF AWARD: Landlord reserves to itself any and all rights to receive awards made for damages to the Premises, Building or Lot and the lease hold hereby created, or any one or more of them, accruing by reason of exercise of eminent domain or by reason of anything lawfully done in pursuance of public or other authority. Tenant hereby releases and assigns to Landlord all Tenant's rights to such awards, and covenants to deliver such further assignments and assurances thereof as Landlord may from time to time request, hereby irrevocably designating and appointing Landlord as its attorney-in-fact to execute and deliver in Tenant's name, it being agreed and understood, however, that Landlord does not reserve to itself and Tenant does not assign to Landlord any damages payable for (i) movable trade fixtures installed by Tenant or anybody claiming under Tenant, at its own expense, or (ii) relocation expenses recoverable by Tenant from such authority in a separate action.

ARTICLE 8

RIGHTS OF MORTGAGEE

8.1 PRIORITY OF LEASE: Landlord or any mortgagee of Landlord, from time to time, shall have the option to subordinate this Lease to any mortgage or deed of trust (a **"Mortgage")** of the Lot or Building, or both (the **"Mortgaged Premises"),** provided that the holder thereof **("Mortgagee")** agrees in writing to recognize the rights of Tenant under this Lease and to accept Tenant as a tenant of the Premises under the terms and conditions of this Lease in the event of acquisition of title by such holder through foreclosure proceedings or otherwise; Tenant agrees to recognize Mortgagee as Landlord in such event. The provisions of this Section 8.1 shall bind and inure to the benefit of the successors and assigns of Tenant and of Mortgagee and upon anyone purchasing the Mortgaged Premises at any foreclosure sale or otherwise. Any such Mortgage to which this Lease shall be subordinated may contain such terms, provisions and conditions as the Mortgagee deems usual or customary.

8.2 LIMITATION ON MORTGAGEE'S LIABILITY: Upon entry and taking possession of the Mortgaged Premises for any purpose other than foreclosure, Mortgagee shall have all rights of Landlord and, during the period of such possession, the duty to perform all Landlord's obligations hereunder. Except during such period of possession, no such holder shall be liable, either as mortgagee or as holder of a collateral assignment of this Lease, to perform or be liable in damages for failure to perform, any of the obligations of Landlord, unless and until such holder shall enter and take possession of the Mortgaged Premises for the purpose of foreclosing a Mortgage. Upon entry for the purpose of foreclosing a Mortgage, such holder shall be liable to perform all of the obligations of Landlord, subject to the provisions of Section 3.3, provided that a discontinuance of any foreclosure proceeding shall be deemed a conveyance under the provisions of Section 10.3 to the owner of the equity of the mortgaged premises. In no event, however, shall the holder of a mortgage on the Lot and/or the Building have any duty to perform or liability with respect to Landlord's obligations under this

Lease unless and until such holder acquires title to the Lot and/or Building through foreclosure or otherwise, and if such holder does so acquire title, in no event shall such holder have any duty to perform or any liability with respect to Landlord's obligations or any fact, circumstance or condition existing, arising or accruing before such acquisition of title.

8.3 MORTGAGEE'S ELECTION: Notwithstanding any other provisions to the contrary contained in this Lease, if prior to substantial completion of Landlord's obligations under Article 3, any holder of a first mortgage on the mortgaged premises enters and takes possession thereafter for the purpose of foreclosing the Mortgage, such holder may elect, by written notice given to Tenant and Landlord at any time within ninety (90) days after such entry and taking of possession, not to perform Landlord's obligations under Article 3, and in such event such holder and all persons claiming under it shall be relieved of all obligations to perform and all liability for failure to perform said Landlord's obligations under Article 3, in which event Tenant may terminate this Lease and all its obligations hereunder by written notice to Landlord and such holder given within thirty (30) days after the day on which such holder shall have given its notice as aforesaid.

8.4 NO PREPAYMENT OR MODIFICATION: No Base Rent, additional rent, or any other charge shall be paid more than thirty (30) days prior to the due dates thereof, and payments made in violation of this provision shall (except to the extent that such payments are actually received by a mortgagee in possession or in the process of foreclosing its mortgage) be a nullity as against such mortgagee, and Tenant shall be liable for the amount of such payments to such mortgagee. No assignment of this Lease and no agreement to make or accept any surrender, termination or cancellation of this Lease and no agreement to modify so as to reduce the rent, change the Term or otherwise materially change the rights of Landlord or holder of a mortgage affecting the Premises under this Lease, or to relieve Tenant of any obligations or liability under this Lease, shall be valid, unless consented to in writing by Landlord's mortgagees of record, if any.

8.5 NO RELEASE OR TERMINATION: No act or failure to act on the part of Landlord which would entitle Tenant under the terms of this Lease, or by law, to be relieved of Tenant's obligations hereunder or to terminate this Lease, shall result in a release or termination of such obligations or a termination of this Lease unless (i) Tenant shall have first given written notice of Landlord's act or failure to act to Landlord's Mortgagees of record, if any, specifying the act or failure to act on the part of Landlord which could or would give basis to Tenant's rights, and (ii) such Mortgagees, after receipt of such notice, shall have failed or refused to correct or cure the condition complained of within a reasonable time thereafter, but nothing contained in this Section 8.5 shall be deemed to impose any obligation on any such Mortgagee to correct or cure any such condition. "Reasonable time" as used above means and includes a reasonable time to obtain possession of the Mortgaged Premises if the Mortgagee elects to do so and a reasonable time to corrector cure the condition if such condition is determined to exist.

8.6 CONTINUING OFFER: The covenants and agreements contained in this Lease with respect to the rights, powers and benefits of a mortgagee (particularly, without limitation thereby, the covenants and agreements contained in this Article 8) constitute a continuing offer to any person, corporation or other entity, which by accepting or requiring an assignment of this

Lease or by entry or foreclosure assumes the obligations herein set forth with respect to such Mortgagee, subject to the provisions of Section 8.3, such Mortgagee being hereby constituted a party to this Lease as an oblige hereunder subject to the provisions of Section 8.3 to the same extent as though its name was written hereon as such, and such Mortgagee shal1be entitled to enforce such provisions in its own name.

8.7 MORTGAGEE'S APPROVAL: Landlord's obligation to perform its covenants and agreements hereunder is subject to the condition precedent that this Lease be approved by the holder of any mortgage of which the Premises are a part and by the user of any commitment to make a Mortgage loan which is in effect on the date hereof. Unless Landlord gives Tenant written notice within fifteen (15) business days after the Effective Date that such holder or issuer, or both, disapproves or has not approved this Lease, then this condition shall be deemed to have been satisfied or waived and the provisions of this Section 8.7 shall be of no further force or effect.

8.8 SUCCESSORS OF MORTGAGEE: All of the rights and privileges of the holders of mortgages on the Lot and/or Building set forth in this Article 8 shall inure to the benefit of any such holders and their respective successors and assigns, including without limitation where applicable any purchases at foreclosure and other parties claiming title by, through or under any such holders. Where reference is made herein to foreclosure, the same rights and privileges for any such holder shall arise and the same results shall obtain if such holder instead acquires title through deed in lieu of foreclosure or otherwise.

ARTICLE 9
DEFAULT

9.l EVENTS OF DEFAULT: The occurrence of any of the following shall be deemed to be an event of default under this Lease: if any default by Tenant continues after notice, in case of Base Rent or any additional rent, for more than ten (10) days, or in any other case for more than thirty (30) days and such additional time, if any, as is reasonably necessary to cure the default (if the default is of such a nature that it is curable but cannot reasonably be cured in thirty (30) days, Tenant has the obligation to commence to cure the default within thirty (30) days, and thereafter diligently and continuously prosecutes such cure to completion), or if Tenant or any Guarantor makes any assignment for the benefit of creditors, commits any act of bankruptcy or files a petition under any bankruptcy or insolvency law, or if such a petition is filed against Tenant or any Guarantor and is not dismissed within forty-five (45) days, or if a receiver or similar officer becomes entitled to Tenant's leasehold hereunder and it is not returned to Tenant within forty-five (45) days, or if such leasehold is taken on execution or other process of law in any action against Tenant. In the event of any default under this Lease by Tenant, then without prejudice to any other rights which it has pursuant to this Lease or at law or in equity, Landlord shall have the following rights and remedies, which are cumulative and not alternative.

9.1.1 Landlord may cancel this Lease by notice to Tenant and retake possession of the Premises for Landlord's account, or Landlord may terminate Tenant's right of possession of the Premises. Tenant shall then quit and surrender the Premises to Landlord. Tenant's liability under all of the provisions of this Lease shall continue notwithstanding any expiration and surrender, or any re-entry, repossession, or disposition hereunder, including

to the extent legally permissible, payment of all Rent and other charges until the date this Lease would have expired had such cancellation or termination not occurred. If Landlord so elects, Rent shall be accelerated and Tenant shall pay Landlord damages in the amount of any and all sums which would have been due for the remainder of the Term, subject to the provisions of Section 9.1.5 below.

9.1.2 Landlord may enter the Premises as agent of Tenant to take possession of any property of Tenant on the Premises, to store such property at the expense and risk of Tenant or to sell or otherwise dispose of such property in such manner as Landlord may see fit without notice to, and at the expense and risk of, Tenant. Re-entry and removal may be effectuated by summary dispossess proceedings, by any suitable action or proceeding, or otherwise. Landlord shall not reliable in anyway in connection with its actions pursuant to this section, to the extent that its actions are in accordance with Applicable Laws.

9.1.3 Landlord may relet all or any part of the Premises for all or any part of the unexpired portion of the Term of this Lease or for any longer period, and may accept any rent then attainable; grant any concessions of rent, and agree to paint or make any special repairs, alterations, and decorations for any new Tenant as it may deem advisable in its sole and absolute discretion. Landlord shall be under no obligation to relet or to attempt to relet the Premises.

9.1.4 Landlord may remedy or attempt to remedy any default of Tenant under this Lease for the account of Tenant and may enter upon the Premises for such purposes. No notice of Landlord's intention to perform such covenants need be given to Tenant unless expressly required by this Lease. Landlord shall not be liable to Tenant for any loss or damage caused by acts of Landlord in remedying or attempting to remedy such default and Tenant shall pay to Landlord all expenses incurred by Landlord in connection with remedying or attempting to remedy such default. Any expenses incurred by Landlord shall accrue interest at the highest rate permitted by law from the date of payment by Landlord until repaid by Tenant.

9.1.5 In calculating the amounts to be paid by Tenant to Landlord pursuant to this Section 9, Tenant shall be credited with the net proceeds of any rents obtained by Landlord by reletting the Premises, after deducting all Landlord's expenses in connection with such reletting, including, without limitation, all repossession costs, brokerage commissions, and fees for legal services. It is agreed by Tenant that Landlord may (i) relet the Premises or any part or part thereof of a term or terms which may, at Landlord's option, be equal to or less than or greater than the period which would otherwise have constituted the balance of the Term and may grant such concessions and free rent as Landlord, in its sole judgment, considers advisable or necessary to relet the same, and (ii) make such alterations, repairs and decorations in the Premises as Landlord, in its sole judgment, considers advisable or necessary to relet the same, and no action of Landlord in accordance with the foregoing or failure to relet or to collect rent under reletting shall operate or be construed to release or reduce Tenant's liability as aforesaid.

9.1.6 So long as at least twelve (12) months of the Term remain unexpired at the

time of such termination of this Lease or of Tenant's right of possession, in lieu of any other damages or indemnity and in lieu of full recovery by Landlord of all sums payable under all the foregoing provisions of this Section 9.1, Landlord may by written notice to Tenant, at any time after this Lease is terminated under any of the provisions contained in this Section 9.1 or as otherwise terminated for breach of any obligation of Tenant and before such full recovery, elect to recover and Tenant shall thereupon pay, as liquidated dan1ages an an1ount equal to the aggregate of the Base Rent and additional rent accrued in the twelve (12) months ended next prior to such termination, plus the amount of Base Rent and additional rent of any kind accrued and unpaid at the time of termination and less the amount of any recovery by Landlord under the foregoing provisions of this Section 9.1 up to the time of payment of such liquidated damages.

9.1.7 Nothing contained in this Lease shall, however, limit or prejudice the right of Landlord to prove and obtain in proceedings for bankruptcy or insolvency by reason of the termination of this Lease, an amount equal to the maximum allowed by any statute or rule of law in effect at the time when, and governing the proceedings in which, the damages are to be proved, whether or not the amount be greater, equal to or less than the amount of the loss or damages referred to above.

92 COSTS: Tenant shall pay to Landlord on demand all costs incurred by Landlord, including attorneys' fees and costs at all tribunal levels, incurred by Landlord in enforcing any of the obligations of Tenant under this Lease. In addition, upon any default by Tenant, Tenant shall also be liable to Landlord for the expenses to which Landlord may be put in re-entering the Premises, reletting the Premises (including attorneys' fees and disbursements, marshal's fees, and brokerage fees, in so doing), and any other expenses reasonably incurred by Landlord.

93 WAIVER: No delay or omission by Landlord in exercising aright or remedy shall exhaust or impair the same or constitute a waiver of, or acquiescence to, a default.

ARTICLE 10

MISCELLANEOUS

10.1 INTERPRETATION: The titles of the Articles and Sections are for convenience and are not to be considered in construing this Lease. Whenever required by the context of this Lease, the singular shall include the plural and the plural shall include the singular. The masculine, feminine and neuter genders shall each include the other. In any provision relating to the conduct, acts or omissions of Tenant the term "Tenant" shall include Tenant's agents, employees, contractors, invitees, successors, or others using the Premises, Building or Property with Tenant's expressed or implied permission.

10.2 NOTICE: Any notice, approval, consent, request, or election required or permitted to be given or made pursuant to this Lease shall be addressed, if to Landlord, at Landlord's address or at such other address as may have been specified by prior notice to Tenant, and if to Tenant, at the Premises or Tenant's address or at such other place as may have been specified by prior notice to Landlord. Any communication so addressed shall be deemed duly served if personally delivered or sent by nationally recognized overnight delivery service.

10.3 LANDLORD'S LIABILITY: CERTAIN DUTIES: The obligations of this Lease shall run with the land, and this Lease shall be binding upon and inure to the benefit of the parties hereto and their respective successors and assignees, except that the Landlord named herein and each successive owner of the Premises shall be liable only for the obligations accruing during the period of its ownership. Neither the Landlord named herein nor any successive owner of the Premises, whether an individual, trust, a corporation or otherwise shall have any personal liability related to this Lease beyond their equity interest in the Premises, and Tenant agrees that it shall look solely to such equity interest then-owned by Landlord for collection of any judgment or any other judicial process requiring the payment of money. Whenever the Premises are owned by a trustee or trustees, the obligations of Landlord shall be binding upon Landlord's trust estate, but not upon any trustee, beneficiary or shareholder of the trust individually. Any Landlord who transfers its title or interest is relieved of all liability with respect to the obligations of Landlord under this Lease to be performed on or after the date of transfer, provided that such transfer is not for the primary purpose of avoiding such obligations. However, each Landlord shall deliver to its transfer real funds previously paid by Tenant if such funds have not yet been applied under the terms of this Lease. Landlord shall not be in default under this Lease unless Landlord (or such ground lessor, mortgagee or beneficiary) fails to cure or diligently pursue a cure of such nonperformance within thirty (30) days after receipt of Tenant's written notice or such longer time as is reasonably necessary, provided that such cure is commenced with in such thirty (30) day period and there after pursued with reasonable diligence.

10.4 NO SURRENDER: The delivery of keys to any employee of Landlord or to Landlord's agent or any employee thereof shall not operate as a termination of this Lease or a surrender of the Premises.

10.5 NO WAIVER: The failure of Landlord or of Tenant to seek redress for violation of, or to insist upon the strict performance of, any covenant or condition of this Lease shall not be deemed a waiver of such violation nor prevent a subsequent act which would have originally constituted a violation, from having all the force and effect of an original violation, nor shall the failure of Landlord to enforce any Rules and Regulations against Tenant or any other tenant in the Building be deemed a waiver of any such Rules and Regulations. The receipt by Landlord of Base Rent or additional rent with knowledge of the breach of any covenant of this Lease shall not be deemed a waiver of such breach by Landlord, unless such waiver be in writing signed by Landlord. No consent or waiver, express or implied, by Landlord or Tenant to or of any breach of any agreement or duty shall be construed as a waiver or consent to or of any other breach of the same or any other agreement or duty.

10.6 NO ACCORD AND SATISFACTION: No acceptance by Landlord of a lesser sum than the Base Rent and additional rent then due shall be deemed to be other than on account of the earlier installment of such rent due, nor shall any endorsement or statement on any check or letter accompanying any check or payment as rent be deemed as accord and satisfaction and Landlord may accept such check or payment without prejudice to Landlord's right to recover the balance of such installment or pursue any other remedy in this Lease provided. All waivers must be in writing and signed by the waiving party. Landlord's failure to enforce any provision of this Lease or its acceptance of Rent shall not be a waiver and shall not prevent Landlord from enforcing that provision or any other provision of this Lease in the future.

10.7 CUMULATIVE REMEDIES: The specific remedies to which Landlord may resort under the terms of this Lease are cumulative and are not intended to be exclusive of any other remedies or means of redress to which it may be lawfully entitled in case of any breach or threatened breach by Tenant of any provisions of this Lease. In addition to the other remedies provided in this Lease, Landlord shall be entitled to the restraint by injunction of the violation or attempted or threatened violation of any of the covenants, conditions or provisions of this Lease or to a decree compelling specific performance of any such covenant, conditions or provisions.

10.8 PARTIAL INVALIDITY: If any term of this Lease, or the application thereof to any person or circumstances shall to any extent be invalid or unenforceable, the remainder of this Lease, or the application of such term to persons or circumstances other than those as to which it is invalid or unenforceable, shall not be affected thereby, and each term of this Lease shall be valid and enforceable to the fullest extent permitted by law.

10.9 LANDLORD'S RIGHT TO CURE: If Tenant shall at any time default in the performance of any obligation under this Lease, Landlord shall have the right, but not the obligation, to enter upon the Premises and to perform such obligation, notwithstanding the fact that no specific provision for such substituted performance by Landlord is made in this Lease with respect to such default. In performing such obligation, Landlord may make any payment of money or perform any other act. All sums so paid by Landlord (together with interest at the rate of 4% per annum in excess of the then prime rate of interest being charged by a majority of the national banks in Miami, Florida); and all necessary incidental costs and expenses in connection with the performance of any such act by Landlord, shall be deemed to be additional rent under this Lease and shall be payable to Landlord immediately upon demand. Landlord may exercise the foregoing rights without waiving any other of its rights or releasing Tenant from any of its obligations under this Lease.

10.10 ESTOPPEL CERTIFICATE: Tenant agrees on the Commencement Date, and from time to time thereafter upon not less than fifteen (15) days prior written request by Landlord, to execute, acknowledge and deliver to Landlord a written statement in form requested by Landlord, certifying that this Lease is unmodified and in full force and effect; that Tenant has no defenses, offsets our counterclaims against its obligations to pay the Base Rent and additional rent and to perform its other covenants under this Lease; that there are no uncured defaults of Landlord or Tenant under this Lease (or, if there have been any modifications, that this Lease is in full force and effect as modified and stating the modifications and, if there are any defenses, offsets, counterclaims or defaults, setting them forth in reasonable detail), and the dates to which the Base Rent, additional rent and other charges have been paid. Any such statement delivered pursuant to this Section 10.10 may be relied upon by any prospective purchaser or mortgagee of the Property or any prospective assignee of any such mortgagee.

10.11 FORCE MAJEURE: In any case where either party hereto is required to do any act (other than the payment of rent or other monies hereunder), delays caused by or resulting from war, civil commotion, fire, flood, other casualty, labor difficulties, shortages or other unavailability of labor, materials, equipment, energy or utility services, governmental regulations, unusually severe weather, Act of God or other causes beyond such party's reasonable control (but not the inability to pay money), shall not be counted in determining the time during

which such act must be completed, and such time shall be deemed extended by such delay. In no event, however, shall the foregoing excuse the late payment of rent or any other monies due hereunder nor extend the time therefor.

10.12 WAIVER OF TRIAL BY JURY AND COUNTERCLAIMS· MEDIATION: LANDLORD AND TENANT EACH HEREBY WAIVE TRIAL BY JURY IN ANY ACTION, PROCEEDINGORCOUNTERCLAIMBROUGHTBYEITHEROFTHEPARTIESHERETO AGAINST THE OTHER ON ANY MATTER WHATSOEVER ARISING OUT OF OR IN ANY WAY CONNECTED WITH THIS LEASE. TENANT FURTHER AGREES THAT IT SHALL NOT INTERPOSE ANY COUNTERCLAIM OR COUNTERCLAIMS (EXCEPT COMPULSORY COUNTERCLAIMS) IN ANY SUMMARY PROCEEDING OR IN ANY ACTION BASED UPON NONPAYMENT OF RENT OR ANY OTHER PAYMENT REQUIRED BY TENANT UNDER THIS LEASE. UPON LANDLORD'S REQUEST, TENANTSHALLPARTICIPATEINMEDIATIONOFADISPUTEBETWEENLANDLORD AND TENANT; THE COST OF A MEDIATOR SHALL BE BORNE EQUALLY BY LANDLORD ANDTENANT.

10.13 RADON GAS NOTICE: Radon is a naturally occurring radioactive gas that, when it has accumulate building insufficient quantities, may present health risks to persons who are exposed to it over time. Levels of radon that exceed federal and state guidelines have been found in buildings in Florida. Additional information regarding radon and radon testing may be obtained from your county public health unit.

10.14 ATTORNEYS' FEES: Wherever provision is made in this Lease for attorneys' fees, such term shall be deemed to include accountants' and attorneys' (including paralegals' and similar persons) fees and costs, whether or not litigation is commenced, including those for appellate, bankruptcy, probate, arbitration, mediation and collections proceedings.

10.15 LANDLORD'S ACCESS: Landlord shall be entitled at all reasonable times and upon reasonable notice (but no notice is required in emergencies) to enter the Premises to examine them and to make such repairs, alterations, or improvements thereto as Landlord considers necessary or reasonably desirable. Tenant shall not unduly obstruct any pipes, conduits, or mechanical or other electrical equipment so as to prevent reasonable access thereto. Landlord shall exercise its rights under this section, to the extent possible in the circumstances, in such manner so as to minimize interference with Tenant's use and enjoyment of the Premises. Landlord and its agents have the right to enter the Premises at all reasonable times and upon reasonable notice to show them to prospective purchasers, lenders, or anyone having a prospective interest in the Building, and, during the last six months of the Term or any renewal thereof, to show them to prospective tenants. Landlord may place customary "For Sale" or "For Lease" signs on the Premises, Building or Property as Landlord deems necessary.

10.16 INCORPORATION OF PRIOR AGREEMENTS: MODIFICATIONS: This Lease is the only agreement between the parties pertaining to this Lease of the Premises, Building or Property and no other agreements either oral or otherwise are effective unless embodied herein. All amendments to this Lease shall be in writing and signed by all parties. Any other attempted

amendment shall be void.

10.17 JOINT AND SEVERAL LIABILITY: All parties signing this Lease as Tenant shall be jointly and severally liable for all obligations of Tenant.

10.18 EXECUTION OF LEASE: Submission or preparation of this Lease by Landlord shall not constitute an offer by Landlord or option for the Premises, and this Lease shall constitute an offer, acceptance or contract only as expressly specified by the terms of this Section. In the event that Tenant executes this Lease first, such action shall constitute an offer to Landlord, which may be accepted by Landlord by executing this Lease, and once this Lease is so executed by Landlord, such offer may not be revoked by Tenant and this Lease shall become a binding contract. In the event that Landlord executes this Lease first, such action shall constitute an offer to Tenant, which may be accepted by Tenant only by delivery to Landlord of a fully executed copy of this Lease, together with a fully executed copy of any and all guaranty agreements and addendums and moneys to be delivered at time of execution, provided that in the event that any party other than Landlord makes any material or minor alteration of any nature whatsoever to any of said documents, then such action shall merely constitute a counteroffer, which Landlord, may, at Landlord's election, accept or reject. Notwithstanding that the Commencement Date may occur and the Term may commence after the date of execution of this Lease, upon delivery and acceptance of this Lease in accordance with the terms of this Lease, this Lease shall be fully effective, and in full force and effect and valid and binding against the parties in accordance with, but on and subject to, the terms and conditions of this Lease.

10.19 AUTHORITY: As a material inducement to Landlord to enter into this Lease, Tenant (and, individually, each party executing this Lease on behalf of Tenant), intending that Landlord rely thereon, represents and warrants to Landlord that:

10.19.1 Tenant and the party executing on behalf of Tenant are fully and properly authorized to execute and enter into this Lease on behalf of Tenant and to deliver this Lease to Landlord;

10.19.2 This Lease constitutes a valid and binding obligation of Tenant, enforceable against Tenant in accordance with the terms of this Lease;

10.19.3 Tenant is duly organized, validly existing and in good standing under the laws of the state of Tenant's organization and has full power and authority to enter into this Lease, to perform Tenant's obligations under this Lease in accordance with the terms of this Lease, and to transact business in the state in which the Premises are located; and

10.19.4 The execution of this Lease by the individual or individuals executing this Lease on behalf of Tenant, and the performance by Tenant of Tenant's obligation under this Lease, have been duly authorized and approved by all necessary corporate or partnership action, as the case maybe, and the execution, delivery and performance of this Lease by Tenant is not in conflict with Tenant's bylaws or articles of incorporation (if a corporation), agreement of partnership (if a partnership), and other charters, agreements, rules or regulations governing Tenant's business as any of the foregoing may have been supplemented or amended in any manner.

10.20 FLORIDA LAW: This Lease shall be governed by the laws of the State of Florida.

10.21 COUNTERPART: This Lease may be executed in more than one copy, each counterpart of which shall be deemed an original and any of which shall be deemed to be complete of it and may be introduced into evidence or used for any purpose without the production of the other counterpart or counter parts.

10.22 TIME IS OF THE ESSENCE: Time is of the essence of this Lease and all provisions contained herein.

10.23 APPROVAL OF PLANS AND SPECIFICATIONS: Neither review nor approval by or on behalf of Landlord of any Tenant's plans nor any plans and specifications for any Tenant alterations or any other work shall constitute a representation or warranty by Landlord, any of Landlord's beneficiaries, the managing agent of the Building or Property or any of their respective agents, partners or employees that such plans and specifications either (i) are complete or suitable for their intended purpose, or (ii) comply with Applicable Laws, it being expressly agreed by Tenant that neither Landlord, nor any of Landlord's beneficiaries, nor the managing agent of the Building or Property nor any of their respective agents, partners or employees assume any responsibility or liability whatsoever to Tenant or to any other person or entity for such completeness, suitability or compliance.

10.24 RELATIONSHIP: Landlord and Tenant disclaim any intention to create a joint venture, partnership or agency relationship.

10.25 RIDERS AND EXHIBITS: All Riders and Exhibits attached to this Lease and all Addendums attached to this Lease and executed by both Landlord and Tenant shall be deemed to be a part of and are hereby incorporated in this instrument.

10.26 SURVIVAL: Tenant's ongoing or unfulfilled obligations shall survive the termination of this Lease, including but not limited to payment of additional rent adjustments which may be calculated and billed after the termination of the Lease.

ARTICLE 11

INSURANCE AND INDEMNITY

11.1 TENANT'S INSURANCE: Tenant shall throughout the term (and any other period when Tenant is in possession of the Premises) carry and maintain, at its sole cost and expense, the following types of insurance, which shall provide coverage on an occurrence basis, with respect to the Premises, in the amounts specified and in the form hereinafter provided for:

11.1.1 Commercial General Liability Insurance. Commercial general liability insurance with a combined single limit of not less than $1,000.000.00 per occurrence (General Aggregate - $2,000,000; Products Aggregate - $2,000,000) for bodily injury and property dan1age insuring against legal liability of the insured with respect to said Premises or arising out of the maintenance, use or occupancy thereof. Said insurance shall include, but not be limited to, independent contractor liability, products and completed operations coverage, and the Broad

Form Commercial General Liability Endorsement, including personal injury and advertising liability, contractual liability and premises medical payments.

11.1.2 Property Insurance. "Special Risk" property insurance including plate glass coverage on a replacement cost basis, with coverage equal to not less than one hundred percent (100%) of the full replacement value of all personal property, decorations, trade fixtures, furnishings, equipment, alterations, leasehold improvements and betterments made by Tenant, and all other contents located or placed therein.

11.1.3 Workers' Compensation and Employees' Liability Insurance. Workers' Compensation Insurance covering all employees of Tenant, as required by the laws of the State where the Premises are located and Employees' Liability coverage with not less than the minimum statutory limits of coverage.

11.1.4 Policy Form. All policies referred to above shall: (i) be taken out with underwriters licensed to do business in Florida and a "Best Rating" of "A" or "A+" (ii) name Landlord and the property manager, or their successors, as additional insured; (iii) be non-contributing with, and shall apply only as primary and not as excess to any other insurance available to Landlord or any mortgagee of Landlord; (iv) contain an undertaking by the insurers to notify Landlord and any other additional insured by certified mail not less than thirty (30) days prior to any material change, cancellation, or termination; and cv) provide that a defense against the primary insured shall not be a defense against payment to the additional insureds. Binding certificates of insurance with endorsements attached or, if required by a mortgagee, copies of such insurance policies certified by an authorized officer of Tenant's insurer as being complete and current, shall be delivered to Landlord promptly upon request. a) Tenant fails to take out or to keep in force any insurance referred to in this Section 11, or should any such insurance not be approved by either Landlord or any mortgagee, and b) Tenant does not commence and continue to diligently cure such default within forty-eight (48) hours after written notice by Landlord to Tenant specifying the nature of such default, then Landlord has the right without assuming any obligation in connection therewith, to effect such insurance at the sole cost of Tenant and all outlays by Landlord shall be paid by Tenant to Landlord without prejudice to any other rights or remedies of Landlord under this Lease. Tenant shall not keep or use in the Premises any article which may be prohibited by any fire or casualty insurance policy in force from time to time covering the Premises or the Building.

11.2 INDEMNIFICATION OF THE PARTIES:

11.2.1 The Tenant shall indemnify and hold harmless Landlord, and its officers, employees, agents, servants, agencies and instrumentalities from any and all liability, losses or damages, including attorneys' fees and costs of defense, which Landlord and its officers, employees, agents, servants, agencies or instrumentalities may incur as a result of any and all claims, demands, suits, causes of action or proceedings of any kind or nature arising out of, relating to or resulting from the performance of this Lease by the Tenant or the Tenant's officers, employees, agents, servants, partners, principals or subcontractors. The Tenant shall pay all claims and losses of any kind in connection therewith and shall investigate and defend all claims, suits or actions of any kind or nature in the name of Landlord, where applicable, including appellate proceedings, and shall pay all costs, judgments, and attorney's fees which may issue thereon.

Provided, however, this indemnification shall only be to the extent and within the limitations of Section 768.28 Florida Statutes, subject to the provisions of that statute whereby the Tenant shall not be held liable to pay a personal injury or property damage claim or judgment by any one person which exceeds the sum of $200,000, or any claim or judgment or portions thereof, which, when totaled with all other claims or judgments paid by the Tenant arising out of the same incident or occurrence, exceed the sum of $300,000 from any and all personal injury or property damage claims, liabilities, losses or causes of action which may arise as a result of the negligence of the Tenant or the Tenant's officers, employees, servants, agents, partners, principals or subcontractors.

11.2.2 The Landlord shall indemnify and hold harmless Tenant, and its officers, employees, agents, servants, agencies and instrumentalities from any and all liability, losses or damages, including attorneys' fees and costs of defense, which Tenant and its officers, employees, servants, agents, agencies or instrumentalities may incur as a result of any and all claims, demands, suits, causes of action or proceedings of any kind or nature arising out of, relating to or resulting from the performance of this Lease by the Landlord or the Landlord's officers, employees, agents, servants, partners, principals or subcontractors. The Landlord shall pay all claims and losses in connection therewith and shall investigate and defend all claims, suits or actions of any kind or nature in the name of Tenant, where applicable, including appellate proceedings, and shall pay all costs, judgments, and attorneys' fees which may issue there on. The Landlord expressly understands and agrees that any insurance policies required by this Lease or otherwise provided by the Landlord shall in no way limit the responsibility to indemnify, keep and save harmless and defend Tenant and its officers, employees, agents, servants, agencies and instrumentalities as herein provided.

11.2.3 Term of Indemnification. The provisions of this indemnification shall survive the expiration of this Lease and shall terminate upon the expiration of the applicable statute of limitation.

11.3 RELEASE AND WAIVER OF SUBROGATION RIGHTS: The parties hereto, for themselves and anyone claiming through or under them, hereby release and waive any and all rights of recovery, claim, action or cause of action, against each other, their respective agents, directors, officers and employees, for any loss or damage that may occur to the Premises or the Building, and to all property, whether real, personal or mixed, located in the Premises or the Building, by reason of any cause against which the releasing party is actually insured or, regardless of the releasing party's actual insurance coverage, against which the releasing party is required to be insured pursuant to the provisions of this Lease. This release and waiver shall apply regardless of the cause or origin of the loss or damage, including negligence of the parties hereto, their respective agents and employees. Each party agrees to provide the other with reasonable evidence of its insurance carrier's consent to such waiver of subrogation. This Section11.3 supersedes any provision to the contrary which may be contained in this Lease.

EXECUTED as a sealed instrument as of the day and year first above written.

LANDLORD: CITY OF OPA-LOCKA

Witness:

_____ By: _____

Name: _____

TENANT: SFSE LLC d/b/a SOUTH FLORIDA SCHOOL OF EXCELLENCE

Witness:

_____ By: _____

Name: _____

As To Legal Sufficiency and Form

_____
Burnadette Norris-Weeks, City Attorney
City of Opa-locka

CERTIFICATE OF LIABILITY INSURANCE

DATE (MM/DD/YYYY): 10/29/2024

THIS CERTIFICATE IS ISSUED AS A MATTER OF INFORMATION ONLY AND CONFERS NO RIGHTS UPON THE CERTIFICATE HOLDER. THIS CERTIFICATE DOES NOT AFFIRMATIVELY OR NEGATIVELY AMEND, EXTEND OR ALTER THE COVERAGE AFFORDED BY THE POLICIES BELOW. THIS CERTIFICATE OF INSURANCE DOES NOT CONSTITUTE A CONTRACT BETWEEN THE ISSUING INSURER(S), AUTHORIZED REPRESENTATIVE OR PRODUCER, AND THE CERTIFICATE HOLDER.

IMPORTANT: If the certificate holder is an ADDITIONAL INSURED, the policy(ies) must have ADDITIONAL INSURED provisions or be endorsed. If SUBROGATION IS WAIVED, subject to the terms and conditions of the policy, certain policies may require an endorsement. A statement on this certificate does not confer rights to the certificate holder in lieu of such endorsement(s).

PRODUCER	CONTACT NAME:	Ignacio Perez	
John Sena Agency, Inc 306 Alcazar Avenue, Suite 303-A Coral Gables, FL 33134	PHONE (A/C, No, Ext):	(305)254-6366	FAX (A/C, No): (305)254-9278
	E-MAIL ADDRESS:	iperez@thesenagroup.com	
	INSURER(S) AFFORDING COVERAGE		NAIC #
	INSURER A :	Wesco Insurance Company	25011
INSURED SFSE, LLC. DBA SOUTH FLORIDA SCHOOL OF EXCELLENCE 780 FISHERMAN DR 2ND FLOOR OPA LOCKA, FL 33054	INSURER B :	Associated Industries Insurance Company	23140
	INSURER C :		
	INSURER D :		
	INSURER E :		
	INSURER F :		

COVERAGES **CERTIFICATE NUMBER:** 00062306-23562 **REVISION NUMBER:** 6

THIS IS TO CERTIFY THAT THE POLICIES OF INSURANCE LISTED BELOW HAVE BEEN ISSUED TO THE INSURED NAMED ABOVE FOR THE POLICY PERIOD INDICATED. NOTWITHSTANDING ANY REQUIREMENT, TERM OR CONDITION OF ANY CONTRACT OR OTHER DOCUMENT WITH RESPECT TO WHICH THIS CERTIFICATE MAY BE ISSUED OR MAY PERTAIN, THE INSURANCE AFFORDED BY THE POLICIES DESCRIBED HEREIN IS SUBJECT TO ALL THE TERMS, EXCLUSIONS AND CONDITIONS OF SUCH POLICIES. LIMITS SHOWN MAY HAVE BEEN REDUCED BY PAID CLAIMS.

INSR LTR	TYPE OF INSURANCE	ADDL INSD	SUBR WVD	POLICY NUMBER	POLICY EFF (MM/DD/YYYY)	POLICY EXP (MM/DD/YYYY)	LIMITS	
A	X COMMERCIAL GENERAL LIABILITY	Y	Y	WPP1490627-08	08/22/2024	08/22/2025	EACH OCCURRENCE	$ 1,000,000
	CLAIMS-MADE X OCCUR						DAMAGE TO RENTED PREMISES (Ea occurrence)	$ 100,000
							MED EXP (Any one person)	$ 5,000
							PERSONAL & ADV INJURY	$ 1,000,000
	GEN'L AGGREGATE LIMIT APPLIES PER:						GENERAL AGGREGATE	$ 3,000,000
	X POLICY PRO-JECT LOC						PRODUCTS - COMP/OP AGG	$ 3,000,000
	OTHER:							$
	AUTOMOBILE LIABILITY						COMBINED SINGLE LIMIT (Ea accident)	$
	ANY AUTO						BODILY INJURY (Per person)	$
	OWNED AUTOS ONLY / SCHEDULED AUTOS						BODILY INJURY (Per accident)	$
	HIRED AUTOS ONLY / NON-OWNED AUTOS ONLY						PROPERTY DAMAGE (Per accident)	$
								$
	UMBRELLA LIAB OCCUR						EACH OCCURRENCE	$
	EXCESS LIAB CLAIMS-MADE						AGGREGATE	$
	DED RETENTION $							$
B	WORKERS COMPENSATION AND EMPLOYERS' LIABILITY	N / A		TWC4151010	08/08/2024	08/08/2025	X PER STATUTE OTH-ER	
	ANY PROPRIETOR/PARTNER/EXECUTIVE OFFICER/MEMBER EXCLUDED? (Mandatory in NH) Y / N: Y						E.L. EACH ACCIDENT	$ 1,000,000
	If yes, describe under DESCRIPTION OF OPERATIONS below						E.L. DISEASE - EA EMPLOYEE	$ 1,000,000
							E.L. DISEASE - POLICY LIMIT	$ 1,000,000
A	Professional Liab			WPP1490627-08	08/22/2024	08/22/2025	Annual Aggregate	3,000,000

DESCRIPTION OF OPERATIONS / LOCATIONS / VEHICLES (ACORD 101, Additional Remarks Schedule, may be attached if more space is required)

THE CITY OF OPA LOCKA HAS BEEN LISTED AS AN ADDITIONAL INSURED IN REGARDS TO GENERAL LIABILITY AS REQUIRED BY WRITTEN CONTRACT AGREEMENT. COVERAGE IS PRIMARY & NON-CONTRIBUTORY.
A WAIVER OF SUBROGATION APPLIES IN FAVOR, UNLESS PRECLUDED BY LAW.
Workers Comp: Officers Excluded - MANIAR BATUL

CERTIFICATE HOLDER

CITY OF OPA LOCKA
780 FISHERMAN STREET
4TH FLOOR
OPA LOCKA, FL 33054

CANCELLATION

SHOULD ANY OF THE ABOVE DESCRIBED POLICIES BE CANCELLED BEFORE THE EXPIRATION DATE THEREOF, NOTICE WILL BE DELIVERED IN ACCORDANCE WITH THE POLICY PROVISIONS.

AUTHORIZED REPRESENTATIVE

(IGP)

© 1988-2015 ACORD CORPORATION. All rights reserved.

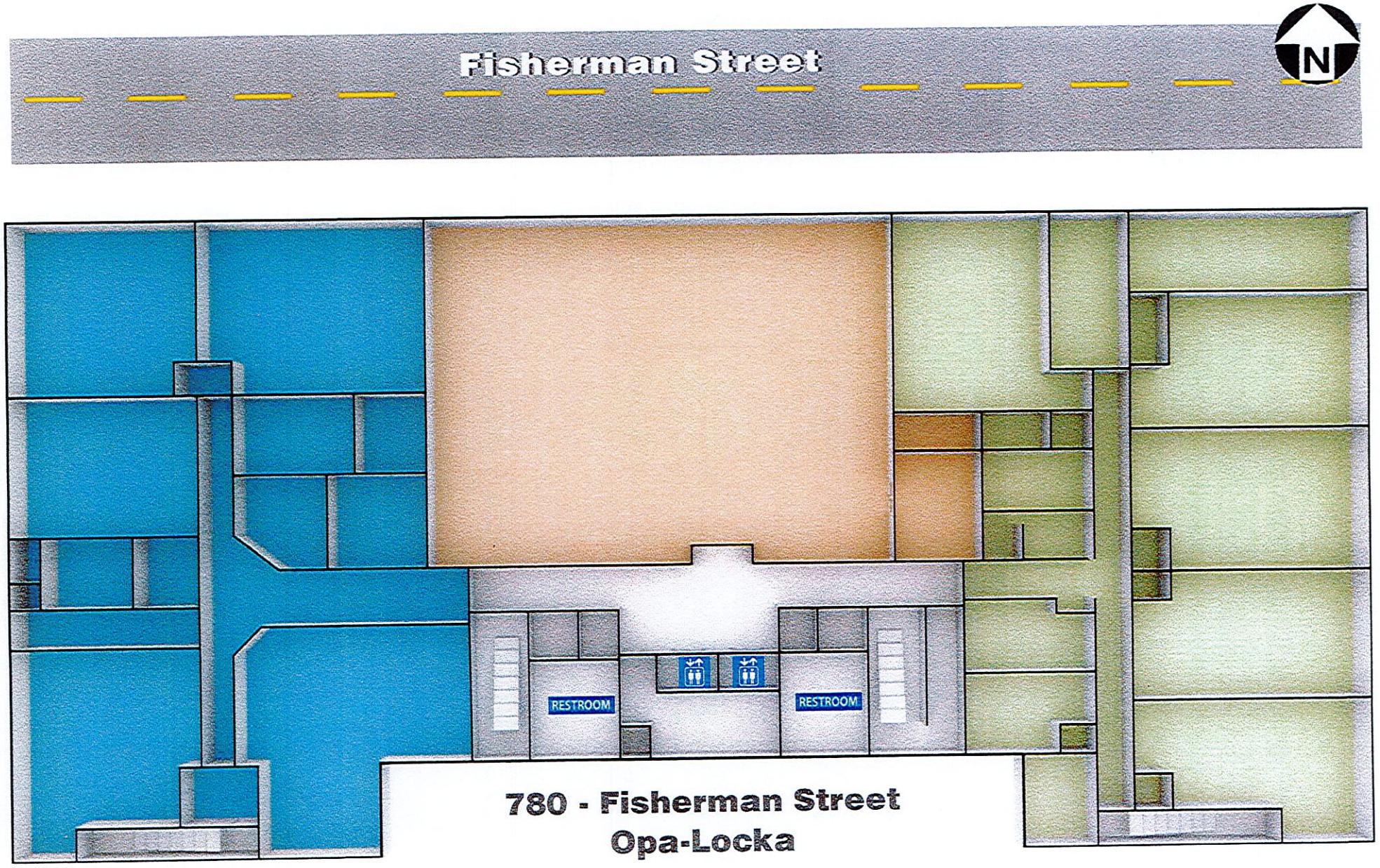

- Ste. 250 *(6,590 sq.ft.)*
- Ste. 220 *(4,274 sq.ft)*
- Ste. 210 *(6,511 sq.ft.)*

EXHIBIT A

EXHIBIT B

RULES AND REGULATIONS

1. The entrance, lobbies, passages, corridors, elevators, and stairways shall not be encumbered or obstructed by Tenant, Tenants agents, servants, employees, licenses, and visitors, nor be used by them for any purpose other than for ingress and egress to and from the Premises. The moving in or out of all safes, freight, and furniture or bulky matter of any description must take place during the hours which Landlord may determine from time to time. Landlord reserves the right to inspect all freight and bulky matter to be brought into the building and exclude from building all freight and bulky matter which violates any of these Rules and Regulations or the Lease of which these Rules and Regulations are a part.

2. No curtains, blinds, shades, screens, or signs other than those furnished by Landlord shall be attached to, hung in, or used in connection with any window or door of the premises without prior written consent of the Landlord. Said consent shall not be unreasonably withheld and shall be consistent with other establishments of similar nature.

3. No additional locks or bolts of any kind shall be placed upon any of the doors or windows by Tenant, nor shall any changes be made in existing locks or the mechanism thereof without prior written consent of the Landlord. Tenant must, upon the termination of its tenancy, restore to Landlord all keys of offices and toilet rooms either furnished to or otherwise procured by Tenant; and in the event of the loss of any keys so furnished; Tenant shall pay to Landlord the cost thereof.

4. Canvassing, soliciting and peddling in the building or on the lot are prohibited, and Tenant shall cooperate to prevent same.

5. Tenant may request heating and/or air conditioning during other periods in addition to normal working hours by submitting its request in writing to the Building Manager's office no later than 2:00 P.M. of the preceding workday (Monday through Friday) on forms available from Building Manager. The request shall clearly state the start and stop hours of the "off-hour" service. Tenant shall submit to the Building Manager a list of personnel who are authorized to make such requests. Charges are to be determined by the Building Manager on the additional hours of operation, as shall be fair and reasonable and reflect the additional operating cost involved.

6. Tenant shall comply with all security measures from time to time established by Landlord for the Building.

7. Tenant shall have the right to install within the Premises, at its sole expense, such a sign or signs as may be reasonable and appropriate under the circumstances. All such signs shall be located within the glass line of the building and in accordance with all applicable zoning codes, building codes and related rules, regulations and ordinances. Tenant shall put in an installation for Landlords approval. Landlord's approval of any sign will not be unreasonably withheld or delayed.

8. Tenant shall have reasonable access to the elevators within the building for the purpose of transporting furniture to the Premises; provided such use shall not be permitted to interfere with normal and usual use of the elevators by other tenants and their visitors. Tenant shall be responsible for any damage done to the elevators or other areas of the building in connection with transportation of said products and shall promptly repair any damage caused thereto.

9. All garbage and refuse shall be deposited in the kind of container specified by Landlord, and shall be placed outside the Premises prepared for collection in the manner and at the times and places specified by Landlord and in accordance with all governmental regulations. If Landlord shall provide or designate a service for picking up refuse and garbage, Tenant shall use same at tenant cost.

10. No radio or television aerial or other similar devices shall be installed without first obtaining in each instance Landlord's consent in writing. No aerial shall be erected on the roof of the building or any exterior walls of the Premises, or on the grounds, without in each instance, the written consent of Landlord. Any aerial so installed without Landlord's written consent may be removed by Landlord at any time and Landlord shall not be liable to Tenant for such removal including any damage to property caused during the removal.

11. Tenant and its employees shall park their cars in those portions of the parking areas designated by Landlord.

12. The plumbing facilities shall not be used for any other purpose than that for which they are constructed, and no foreign substance of any kind shall be thrown therein, and the expenses of any breakage, stoppage, or damage resulting from a violation of this provisions shall be borne by Tenant, who shall, or whose employees, agents or invitees shall have caused same.

DIVISION of CORPORATIONS
an official State of Florida website

Previous on List Next on List Return to List

Filing History

Fictitious Name Search
Submit

Fictitious Name Detail

Fictitious Name

SOUTH FLORIDA SCHOOL OF EXCELLENCE

Filing Information

Registration Number	G16000053640
Status	ACTIVE
Filed Date	05/30/2016
Expiration Date	12/31/2027
Current Owners	1
County	MIAMI-DADE
Total Pages	4
Events Filed	3
FEI/EIN Number	NONE

Mailing Address

780 FISHERMAN STREET, 2ND FLOOR
OPALOCKA, FL 33054

Owner Information

SFSE LLC
780 FISHERMAN STREET 2ND,3RD FLOOR
OPALOCKA, FL 33054
FEI/EIN Number: 81-2780334
Document Number: L16000103985

Document Images

05/30/2016 -- Fictitious Name Filing	View image in PDF format
04/19/2023 -- CHANGE NAME/ADDRESS	View image in PDF format
03/23/2022 -- Fictitious Name Renewal Filing	View image in PDF format
11/22/2021 -- CHANGE NAME/ADDRESS	View image in PDF format

Previous on List Next on List Return to List

Filing History

Fictitious Name Search
Submit